The Clemson University Grid Simulator

1st International Workshop on Grid Simulator Testing of Wind Turbine Drivetrains – NWTC, Bolder, CO

June 13, 2013

J. Curtiss Fox – Clemson University

Grid Simulator Founding Partners

CLEMSON UNIVERSITY

DUKE ENERGY®

SRNL™

SCANA® POWER FOR LIVING

UL® Underwriters Laboratories

Santee Cooper®

U.S. Department of Energy
Energy Efficiency and Renewable Energy
Bringing you a prosperous future where energy is clean, abundant, reliable, and affordable

TECO Westinghouse

Grid Integration Evaluations

Steady State and Envelope Evaluations	• Power Set Points • Voltage and Frequency Variations • Controls Evaluation
Power Quality Evaluations	• Voltage Flicker • Harmonic Evaluations • Anti-Islanding (Software)
Ancillary Services	• Frequency Response • Active Volt-VAR Control • Active Frequency Regulation
Grid Fault Ride-Through Testing	• Low Voltage Ride-Through (LVRT) • Unsymmetrical Fault Ride-Through • High Voltage Ride-Through (HVRT)
Open Loop Testing	• Recreation of field events with captured waveform data
Hardware-In-the-Loop Testing	• Simulated dynamic behavior and interaction between grid and the device under test

Increasing level of difficulty

Markets and Applications

MW Scale Power Conversion

EV Charging Stations

Utility Scale Energy Storage

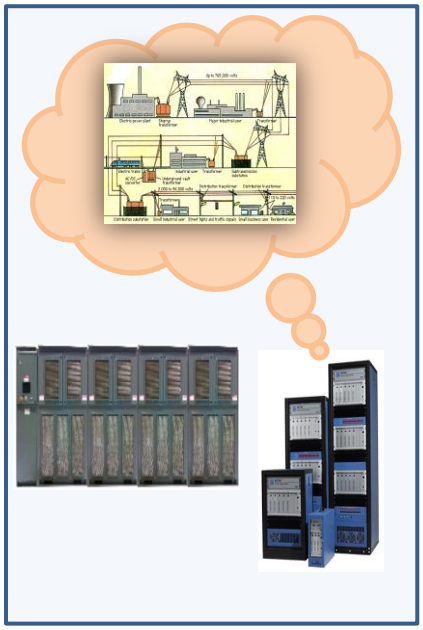

15MW HIL Grid Simulator

Large Solar PV Converter

Micro-Grid Applications

Wind Energy

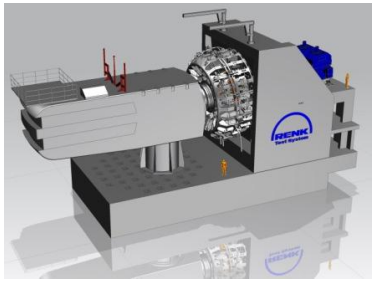

Traditional Distributed Generation (Diesel, NG. etc.)

Facility Layout

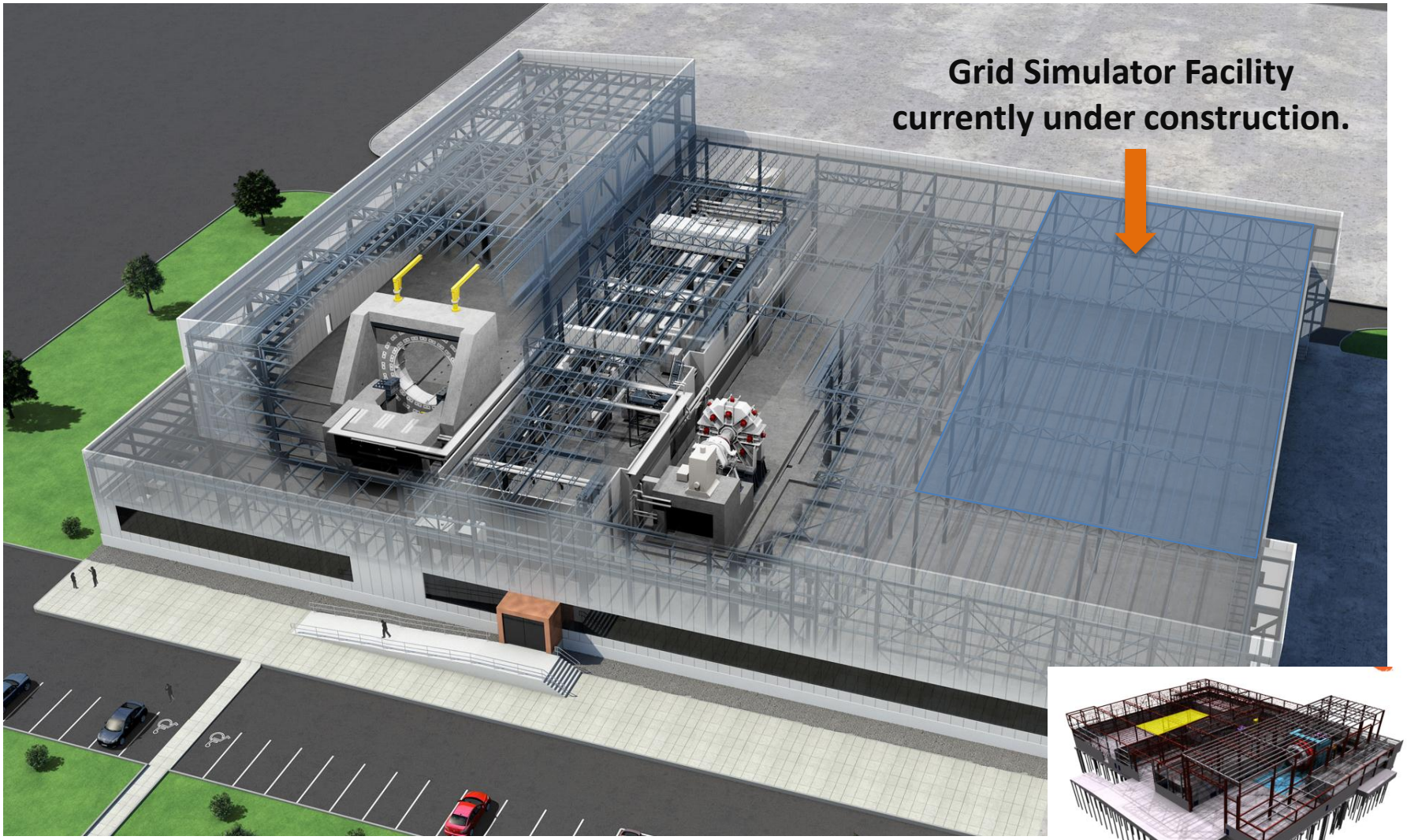

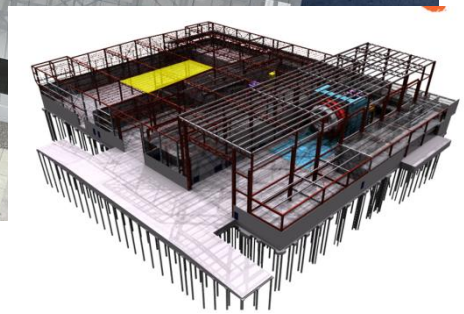

Grid Integration Test Facility

23.9 kV Utility Bus

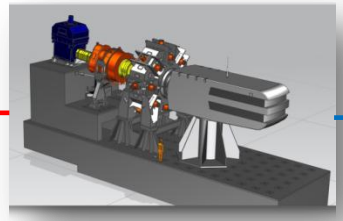

7.5MW Test Stand

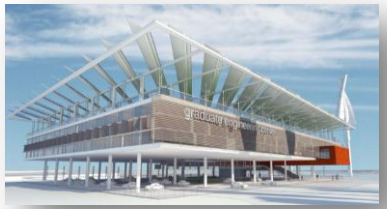

Graduate Education Center
500 kW Solar Array

15 MW HIL
Grid Simulator

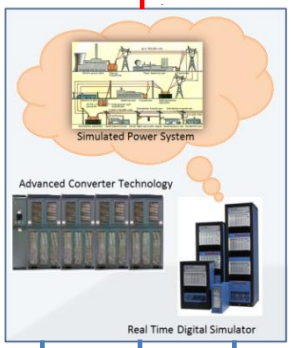

15MW Test Stand

4.16 kV 5 MVA Test Bus

23.9 kV 20 MVA Test Bus

Up to three independent grid integration tests can run simultaneously in each of the three experimental bay's

Experimental Bay #3

Experimental Bay #2

Experimental Bay #1

Facility Single Line Diagram

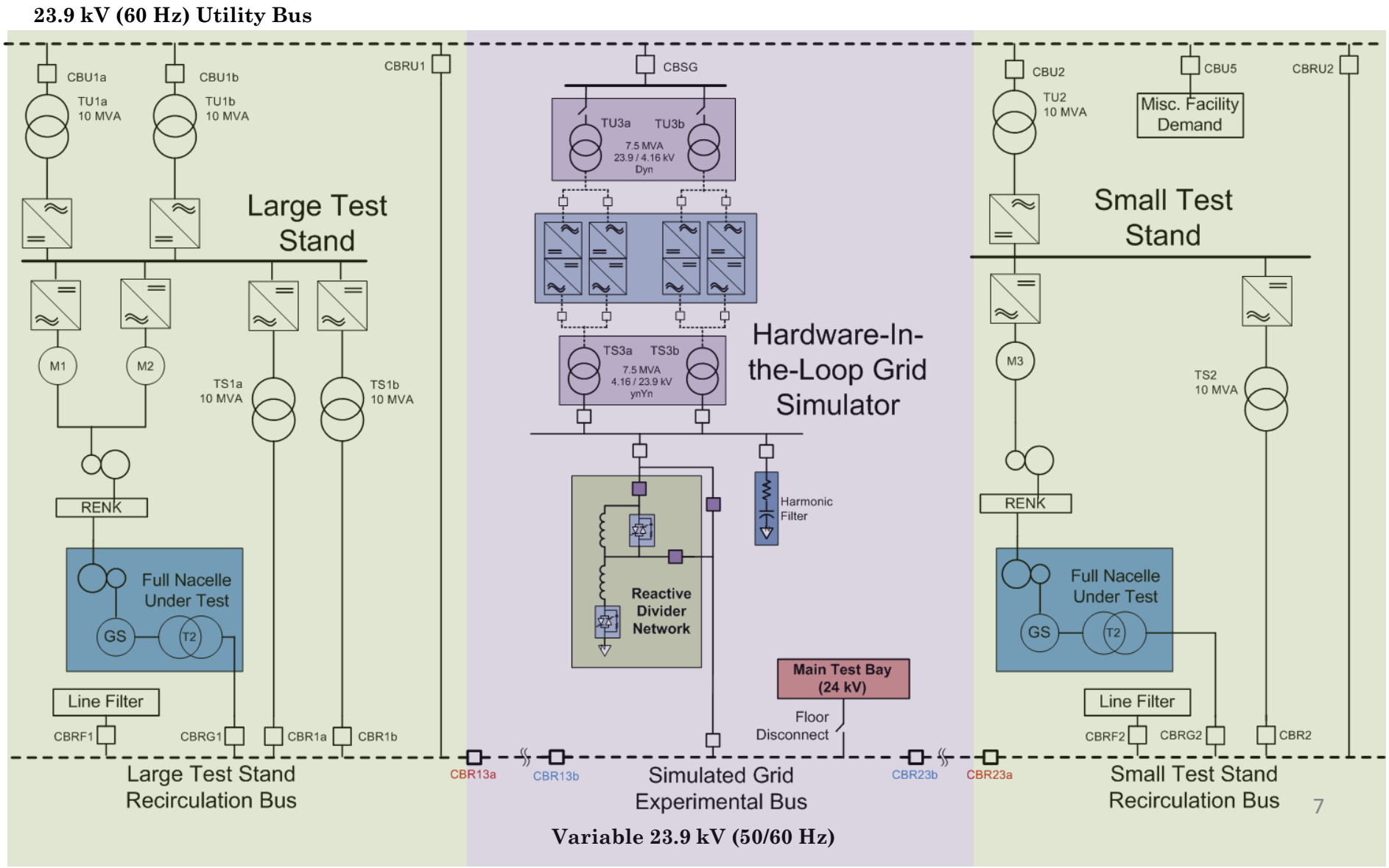

Grid Integration Evaluations

Steady State and Envelope Evaluations	• Power Set Points • Voltage and Frequency Variations • Controls Evaluation
Power Quality Evaluations	• Voltage Flicker • Harmonic Evaluations • Anti-Islanding (Software)
Ancillary Services	• Frequency Response • Active Volt-VAR Control • Active Frequency Regulation
Grid Fault Ride-Through Testing	• Low Voltage Ride-Through (LVRT) • Unsymmetrical Fault Ride-Through • High Voltage Ride-Through (HVRT)
Open Loop Testing	• Recreation of field events with captured waveform data
Hardware-In-the-Loop Testing	• Simulated dynamic behavior and interaction between grid and the device under test

Increasing level of difficulty

Electrical Capabilities

Three Independent Test Bays

Overall Facility Electrical Capabilities	
Main Test Bay	
Nominal Voltage	24 kV (50/60 Hz)
Nominal Power	15 MVA (7.5 MVA)
Frequency Range	45 to 65 Hz
Sequence Capabilities	3 and 4 wire operation
Overvoltage capabilities	133% Continuous Overvoltage
Fault Simulation	Yes (includes Reactive Divider)
Hardware-In-the-Loop	Yes (limit 1 HIL total)
Small Test Bay 1	
Nominal Voltage	4160 V (50/60 Hz)
Nominal Power	3.75 MVA (3 MW @ 0.8 PF)
Frequency Range	45 to 65 Hz
Sequence Capabilities	3 and 4 wire operation
Overvoltage capabilities	133% Continuous Overvoltage
Fault Simulation	Limited to Converter Only
Hardware-In-the-Loop	Yes (limit 1 HIL total)
Small Test Bay 2	
Nominal Voltage	4160 V (50/60 Hz)
Nominal Power	3.75 MVA (3 MW @ 0.8 PF)
Frequency Range	45 to 65 Hz
Sequence Capabilities	3 and 4 wire operation
Overvoltage capabilities	133% Continuous Overvoltage
Fault Simulation	Limited to Converter Only
Hardware-In-the-Loop	Yes (limit 1 HIL total)

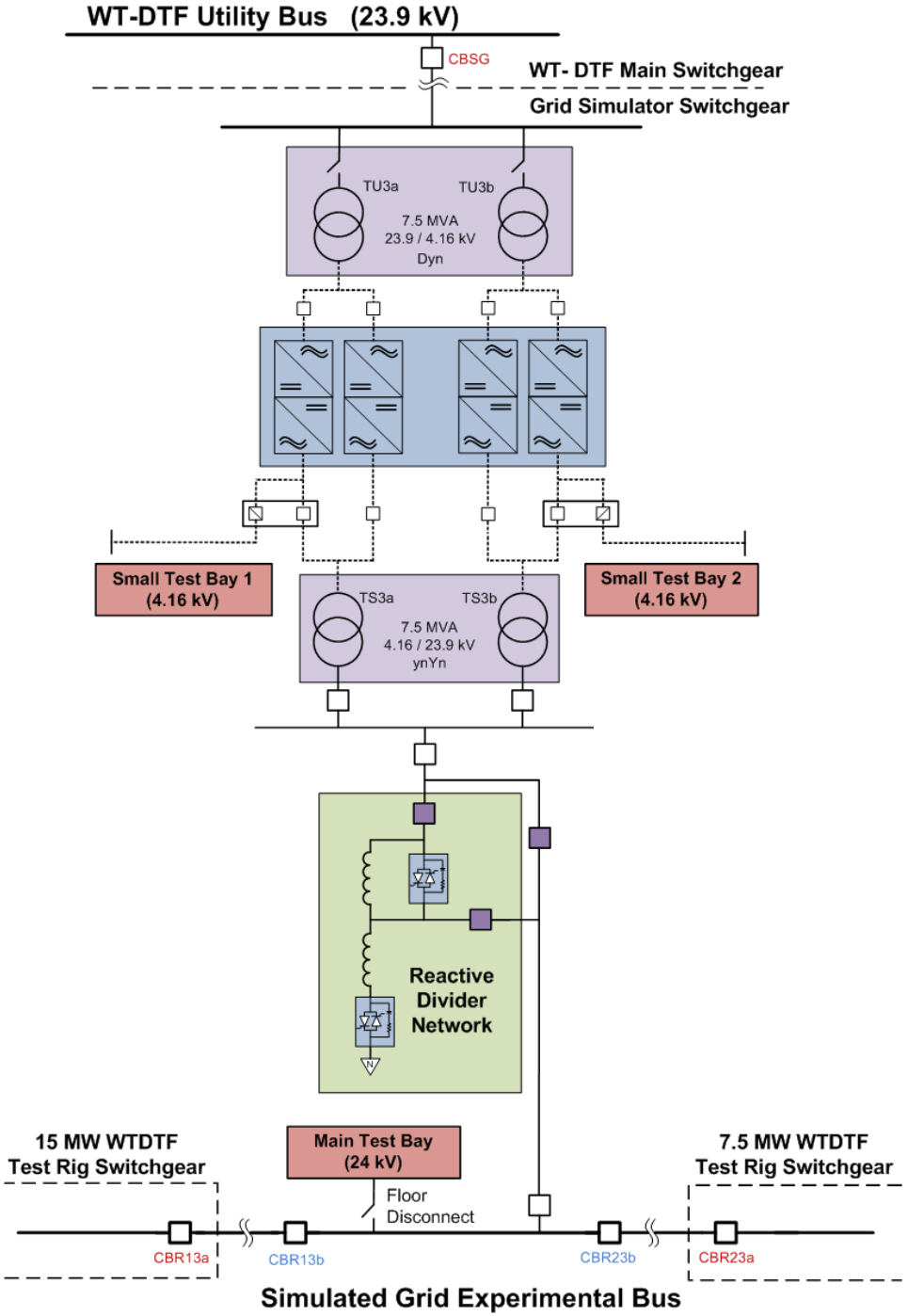

TECO Westinghouse Motor Company: Power Amplifier

TWMC Power Amplifier	
Installed Power	20 MVA (15 MW @ 0.8 PF)
Rated Power	15 MVA (12 MW @ 0.8 PF)
Cabinet Power Split	4 x 3.75 MVA or 2 x 7.5 MVA
Rated Voltage	0 - 4160 V
Overvoltage	133 % Rated Output Voltage
Multilevel Operation	7 - Levels (9 - Levels Overvoltage)
Frequency Range	3 - 66 Hz
Overload Capability	110% for 60 s (10 min duty cycle)

Power Module

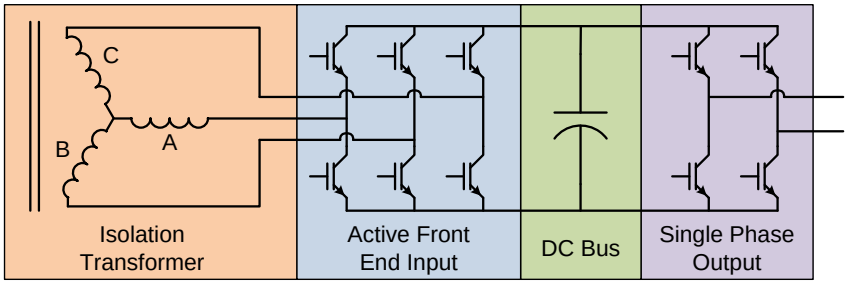

Individual power module with three phase input and single phase output

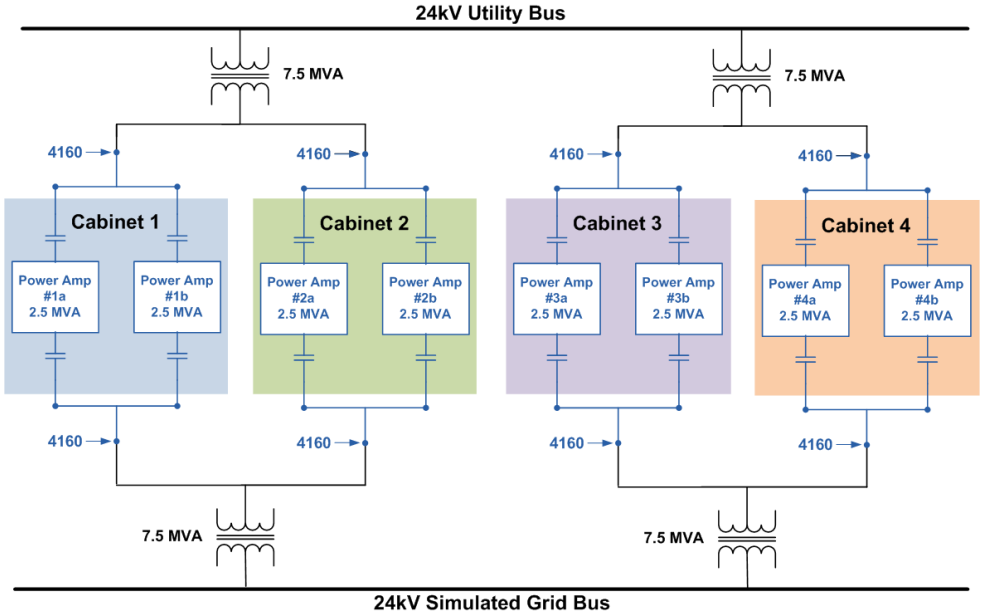

8 Parallel Amplifiers arranged into 4 Cabinets

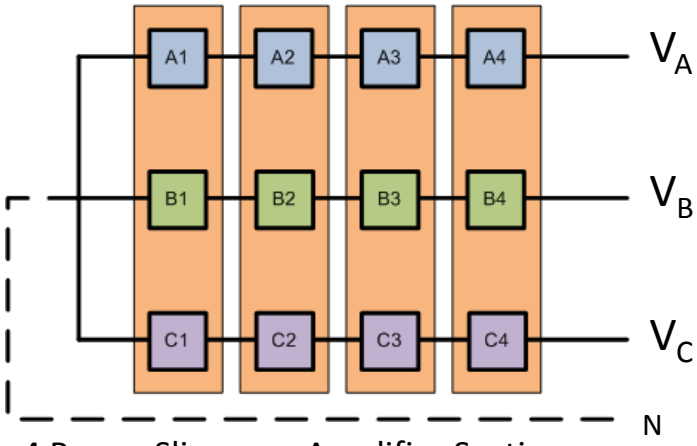

4 Power Slices per Amplifier Section

TECO Westinghouse Motor Company: Power Amplifier

- Phase Shifted Carrier PWM
  - High degree of harmonic cancelation due to multilevel architecture
  - Increased reference sampling fidelity
- Sampling fidelity is further increased by using asymmetrical sampling of each individual carrier

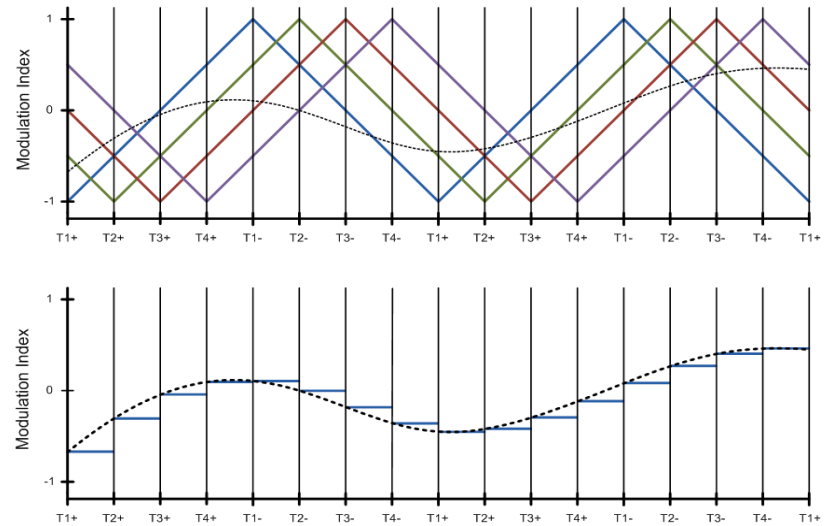

Synchronous Sampling up to 12 kHz

Power Amplifier Output Harmonic Spectrum (Fs = 2 kHz)

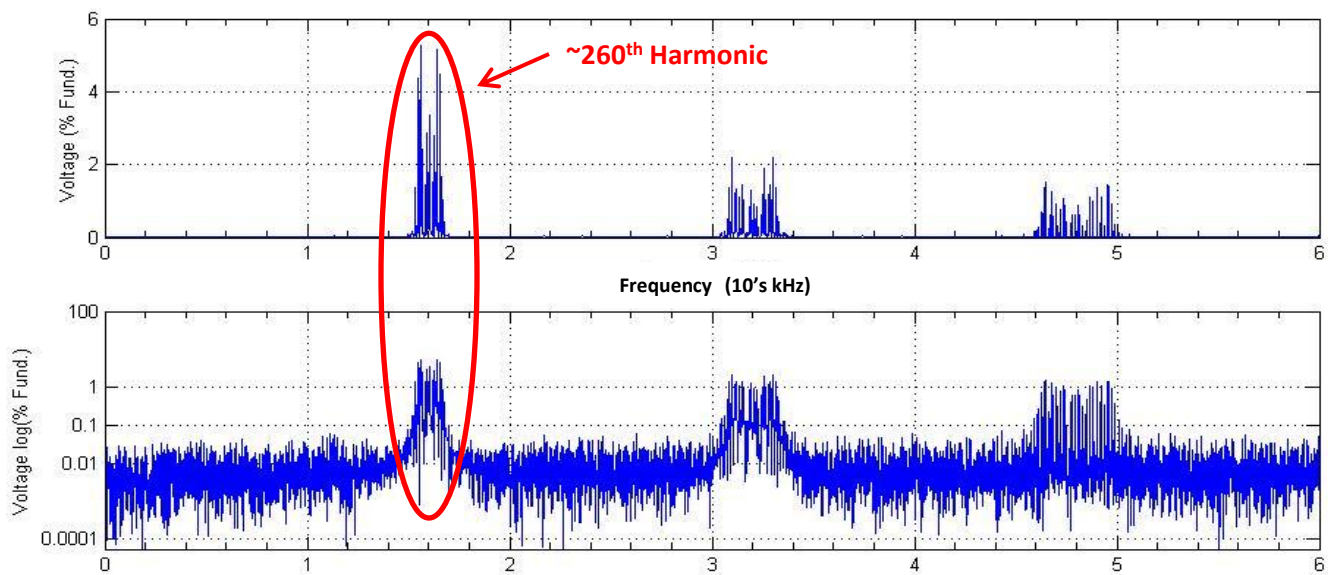

Preliminary simulations show excellent results with 2 kHz switching frequencies

First noise mode is at 16 kHz (Fs x 2 x Carriers) , 8 times the switching frequency

Reference resolution also at 16 kHz using asymmetrical sampling

Fault Ride-Through Options with the Grid Simulator

- Clemson's unique combination of a power converter and reactive divider network provides several different testing options
- For smaller machines, Clemson approach to Fault Ride-Through (FRT) testing is backwards compatible with the two existing methods of performing FRT evaluations
- The first test article will provide the platform for Clemson researchers to evaluate advantages of all three methods and their impact on the DUT

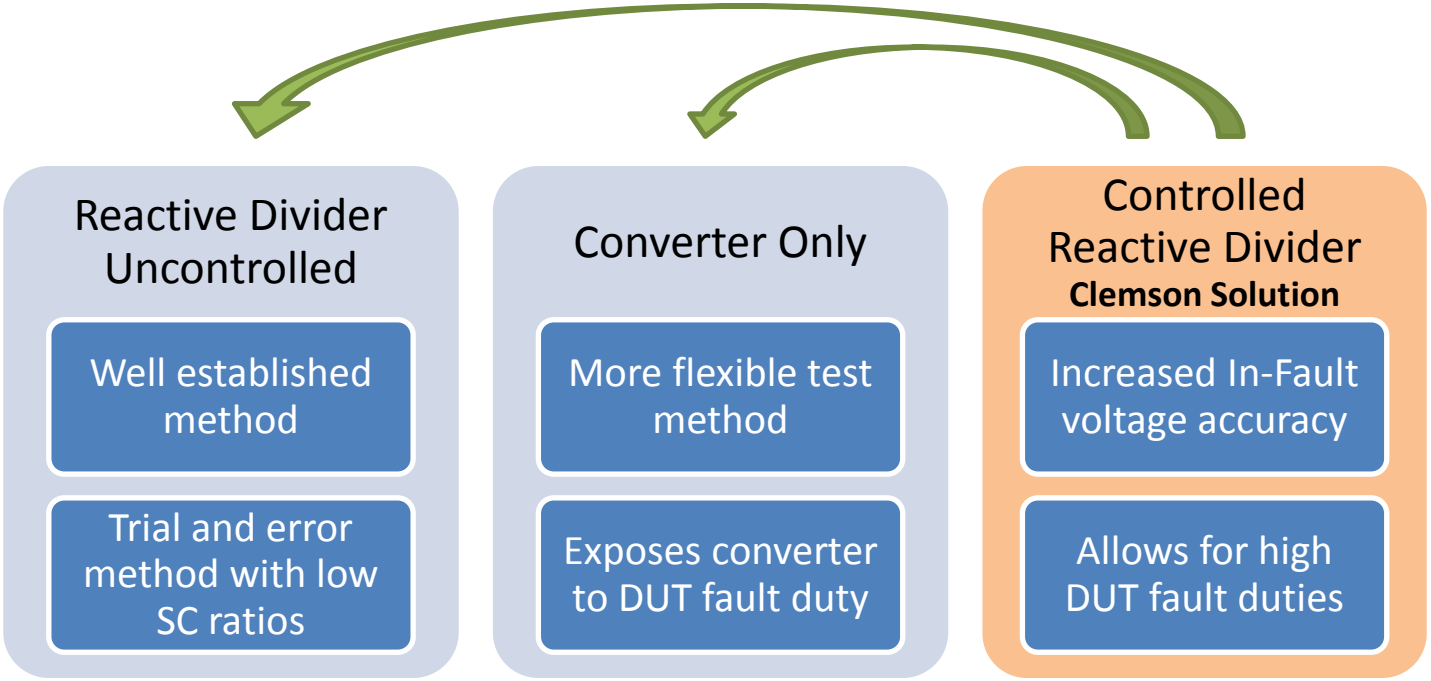

Reactive Divider Network

- Safety Considerations
  - Access controlled room
  - Automatic grounding system when not in service
- Voltage Isolation
  - 35 kV insulation system
  - 2500 A (100 MVA) DUT fault duty
- Performance and Flexibility
  - Remote control of all elements allows for setup and operation without the need for room access
  - Individual phase operation allows for thousands of three phase impedance combinations

Table of Fixed Reactance Combinations

Fixed Switch Positions	Shunt Fixed (mH)	Series Fixed (mH)	Total Shunt (mH)	Total Series (mH)
1-1-1-0	0	25	0-25	25-50
1-1-0-0	0	50	0-25	50-75
1-0-0-0	0	75	0-25	75-100
0-1-1-1	25	0	25-50	0-25
0-1-1-0	25	25	25-50	25-50
0-1-0-0	25	50	25-50	50-75
0-0-1-1	50	0	50-75	0-25
0-0-1-0	50	25	50-75	25-50
0-0-0-1	75	0	75-100	0-25

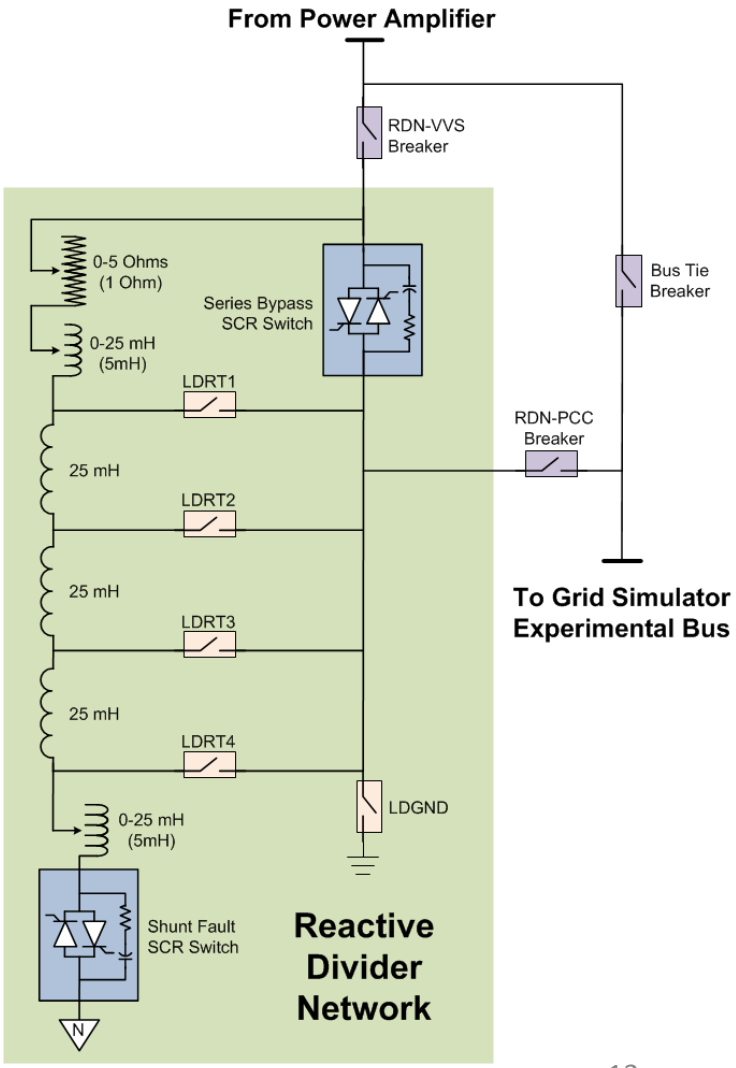

Reactive Divider Network

- Safety Considerations
  - Access controlled room
  - Automatic grounding system when not in service
- Voltage Isolation
  - 35 kV insulation system
  - 2500 A (100 MVA) DUT fault duty
- Performance and Flexibility
  - Remote control of all elements allows for setup and operation without the need for room access
  - Individual phase operation allows for thousands of three phase impedance combinations

Table of Fixed Reactance Combinations

Fixed Switch Positions	Shunt Fixed (mH)	Series Fixed (mH)	Total Shunt (mH)	Total Series (mH)
1-1-1-0	0	25	0-25	25-50
1-1-0-0	0	50	0-25	50-75
1-0-0-0	0	75	0-25	75-100
0-1-1-1	25	0	25-50	0-25
0-1-1-0	25	25	25-50	25-50
0-1-0-0	25	50	25-50	50-75
0-0-1-1	50	0	50-75	0-25
0-0-1-0	50	25	50-75	25-50
0-0-0-1	75	0	75-100	0-25

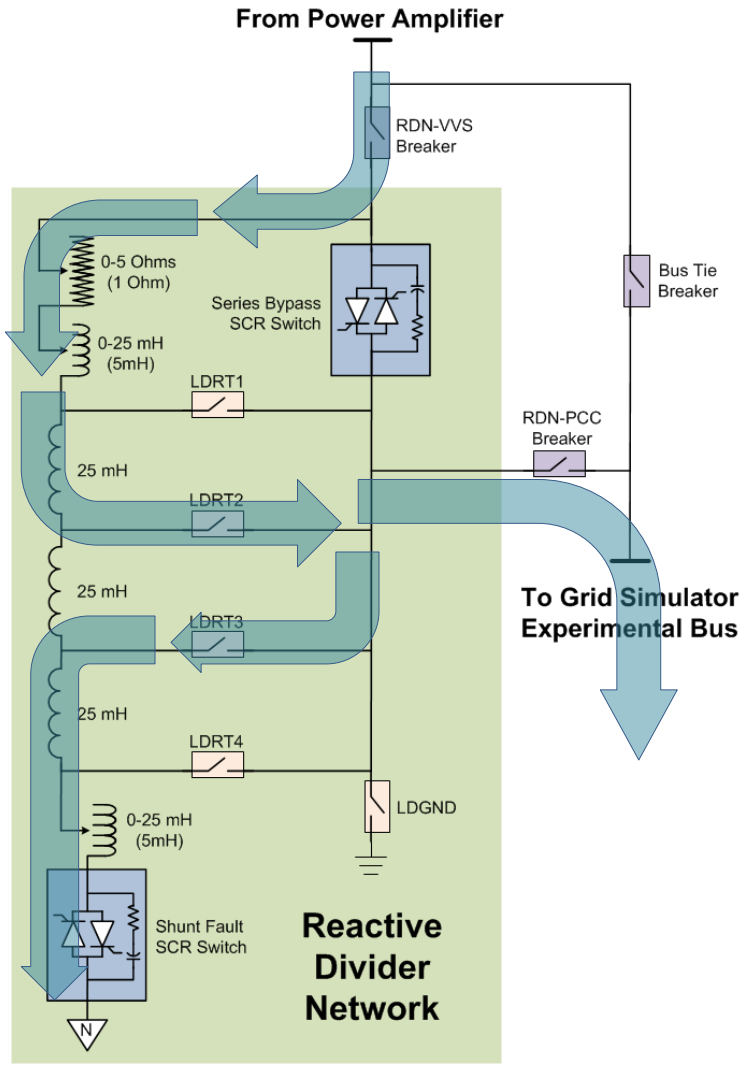

Reactive Divider Network

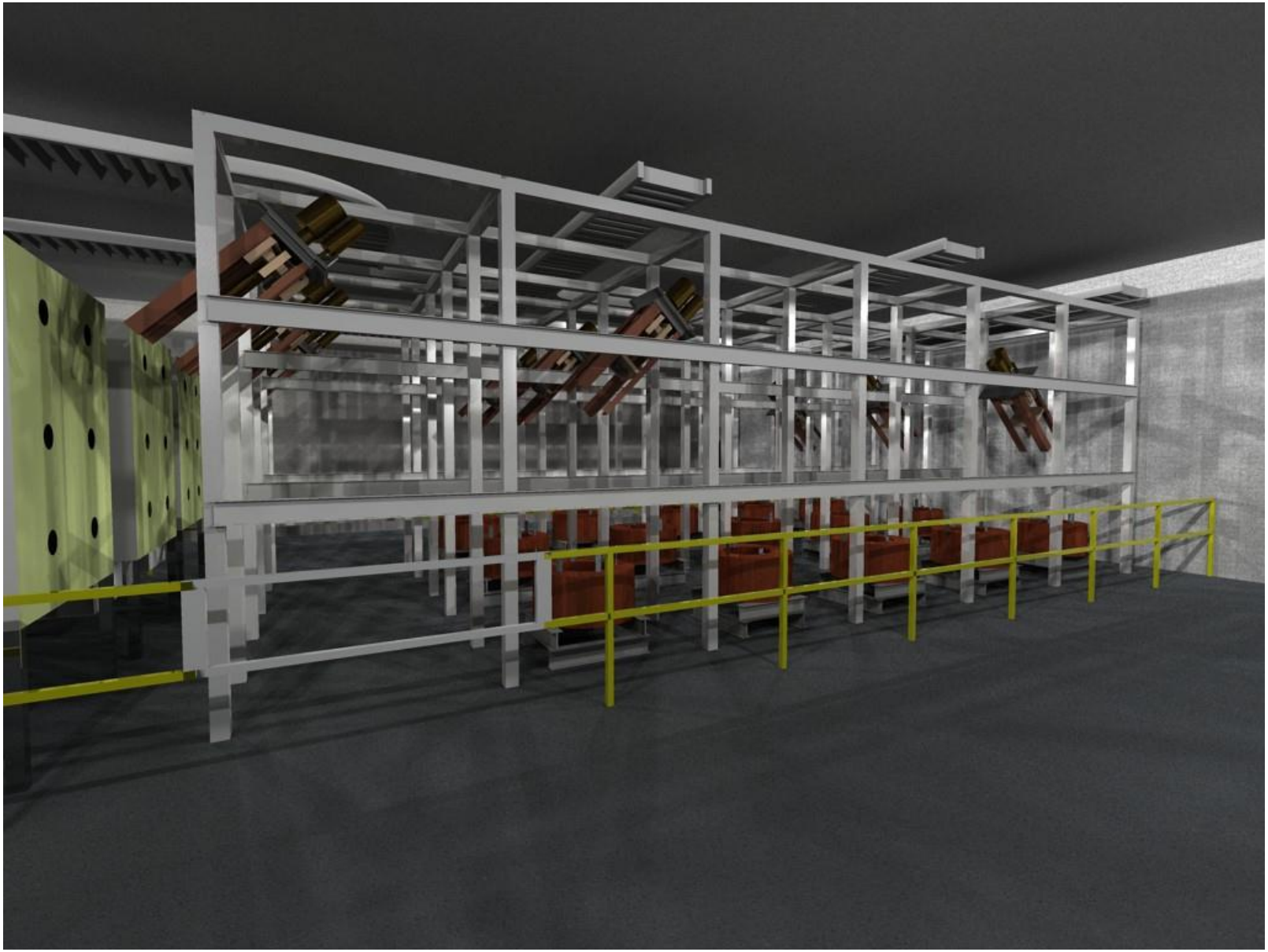

Interface Controller and DAQ

- Detailed specifications developed through coordinated efforts between:

Savannah River National Laboratory	Clemson University	National Instruments

- Significant amount of hardware and software shared with the WTDTF systems
- The design allows for custom sub-configurations by the repurposing of hardware
- Provides a powerful and flexible platform for the development of custom control systems to meet the various grid integration evaluation scenarios

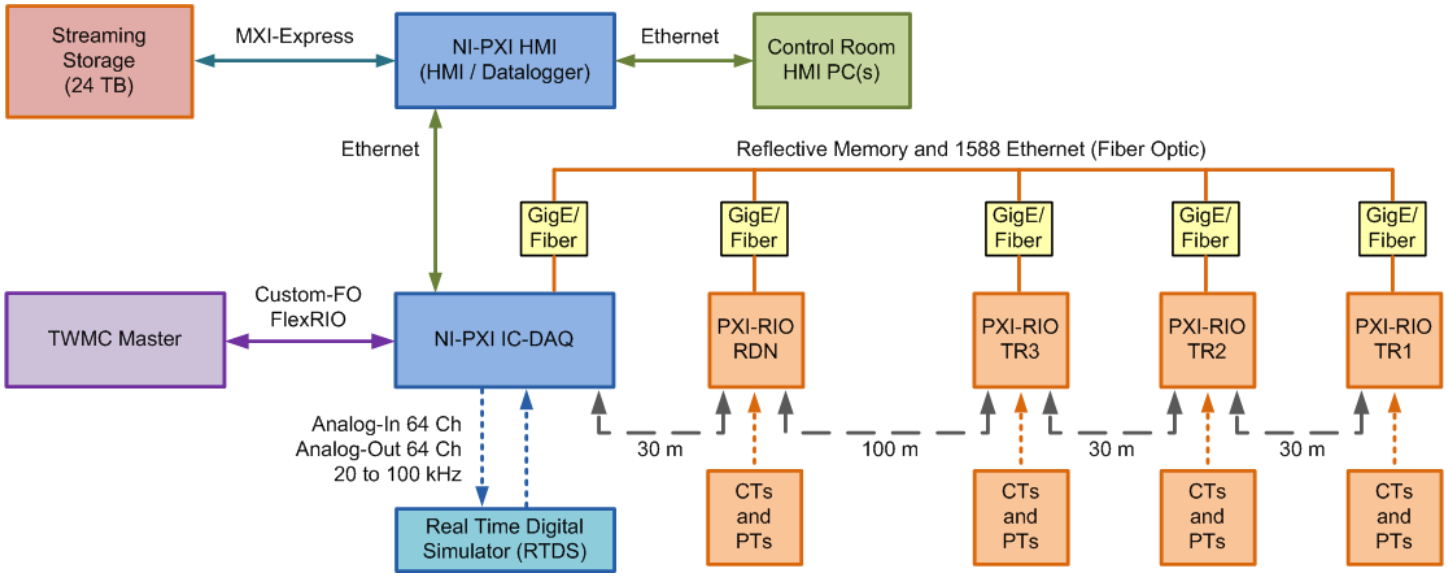

Grid Simulator Interface Control and DAQ Hardware Platform

Interface Controller HIL Testing

- The RTDS simulates the physical Grid Simulator hardware and DUT hardware and control systems in real time
- A scaled version of the NI Interface Controller is used for real time control of the simulated hardware and DUT to aid in:
  - Control algorithm verification and tuning
  - Startup and operational procedures
  - Emergency stop conditions and shutdown methods
  - Human Machine Interface (HMI) design
  - Identifying commissioning activities and protocols
  - Segmenting and testing of communication interfaces and protocols

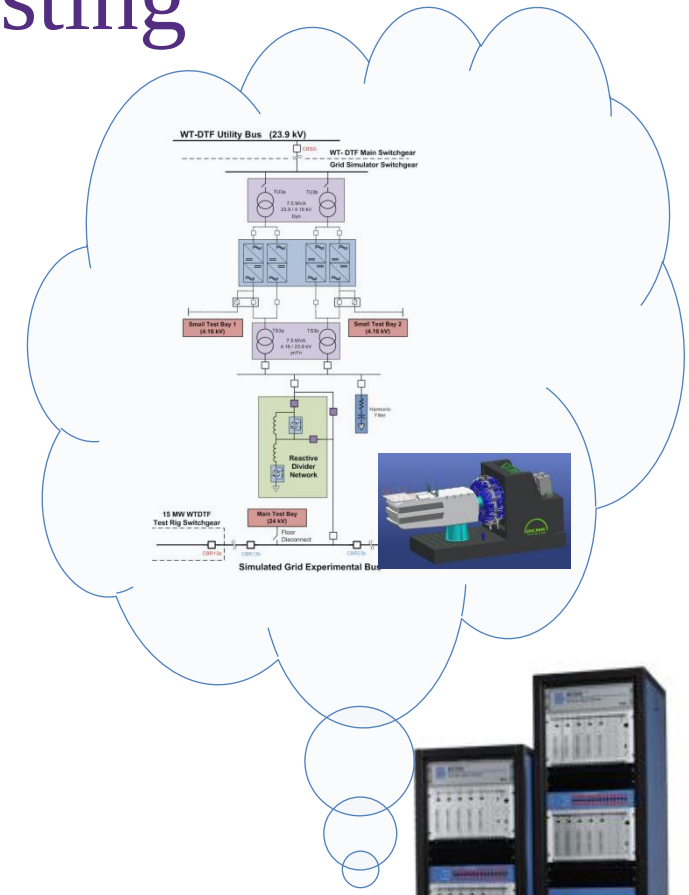

National Instruments Interface Controller

Real time control and measurement signals

Real Time Power System Simulator RTDS®

Interface Controller HIL Testing

- The RTDS simulates the physical Grid Simulator hardware and DUT hardware and control systems in real time
- A scaled version of the NI Interface Controller is used for real time control of the simulated hardware and DUT to aid in:
  - Control algorithm verification and tuning
  - Startup and operational procedures
  - Emergency stop conditions and shutdown methods
  - Human Machine Interface (HMI) design
  - Identifying commissioning activities and protocols
  - Segmenting and testing of communication interfaces and protocols