Savannah River National Laboratory™

OPERATED BY SAVANNAH RIVER NUCLEAR SOLUTIONS

We put science to work.™

Modeling of Rogowski Coils in RSCAD for Calibration Verification using RTDS

Klaehn Burkes
Electrical Engineer

2nd Annual International Workshop on Grid Simulator Testing of Energy Systems and Wind Turbine Powertrains

September 17-18, 2014

SRNL-L4500-2014-00079

Savannah River NUCLEAR SOLUTIONS℠

FLUOR • NEWPORT NEWS NUCLEAR • HONEYWELL

SRNL's High Current Lab – History

- Original high current standards from NIST
  - 100kA Weld Transformer
  - 10-100A Valhalla 2555A Current Amplifiers
  - 2 Machinable Rogowski Coils
    - Range 100-100kA
  - 2 Jamb CT's
    - Range 10-1000A
- New High Voltage Equipment
  - Zimmer Power Analyzer
  - Zimmer 3-φ Voltage Transformer
  - Chroma High Voltage Supply
    - 10kV-AC

SRNL's High Current Lab – Accountability

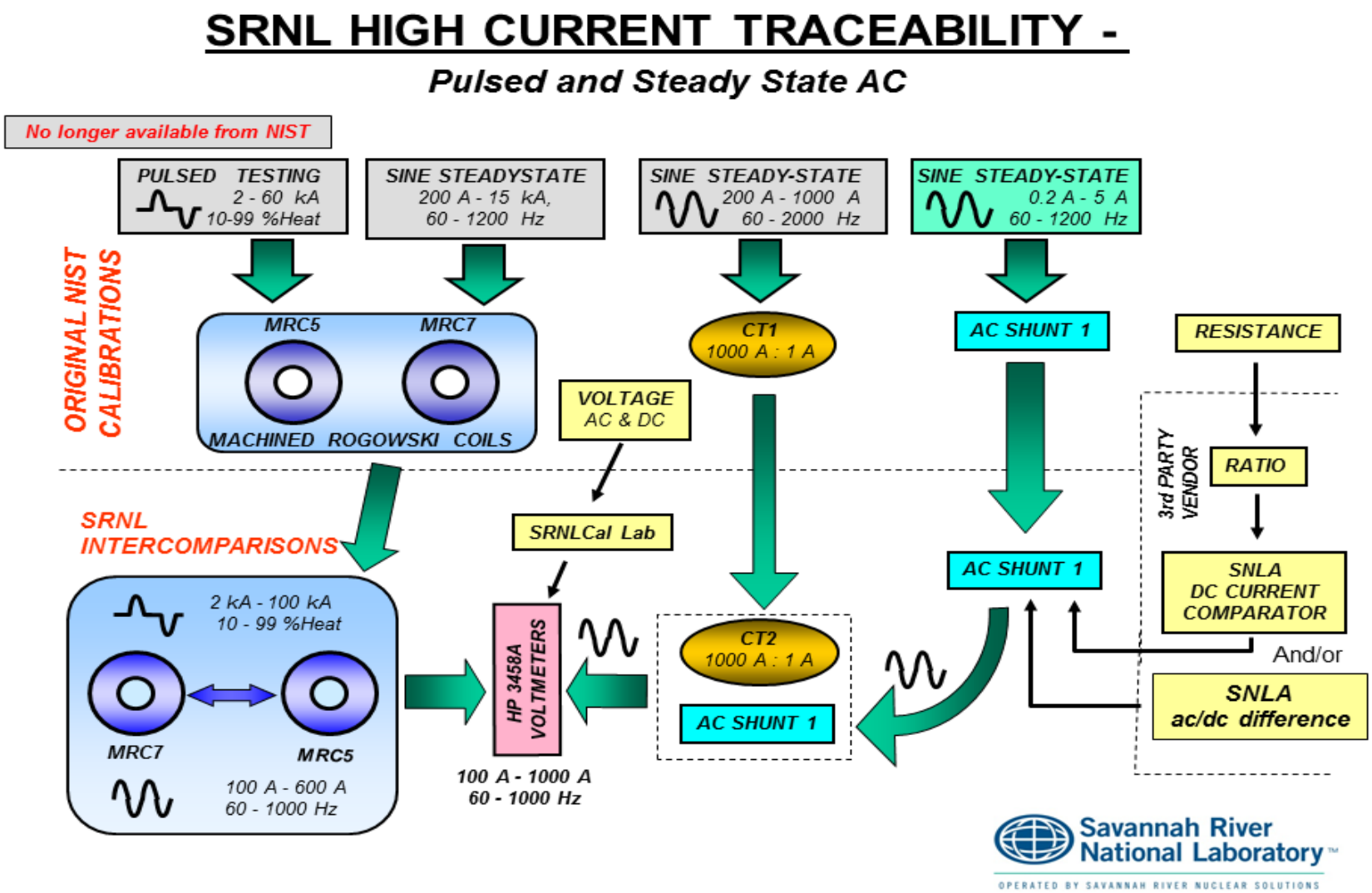

SRNL's High Current Lab – Calibration Equipment

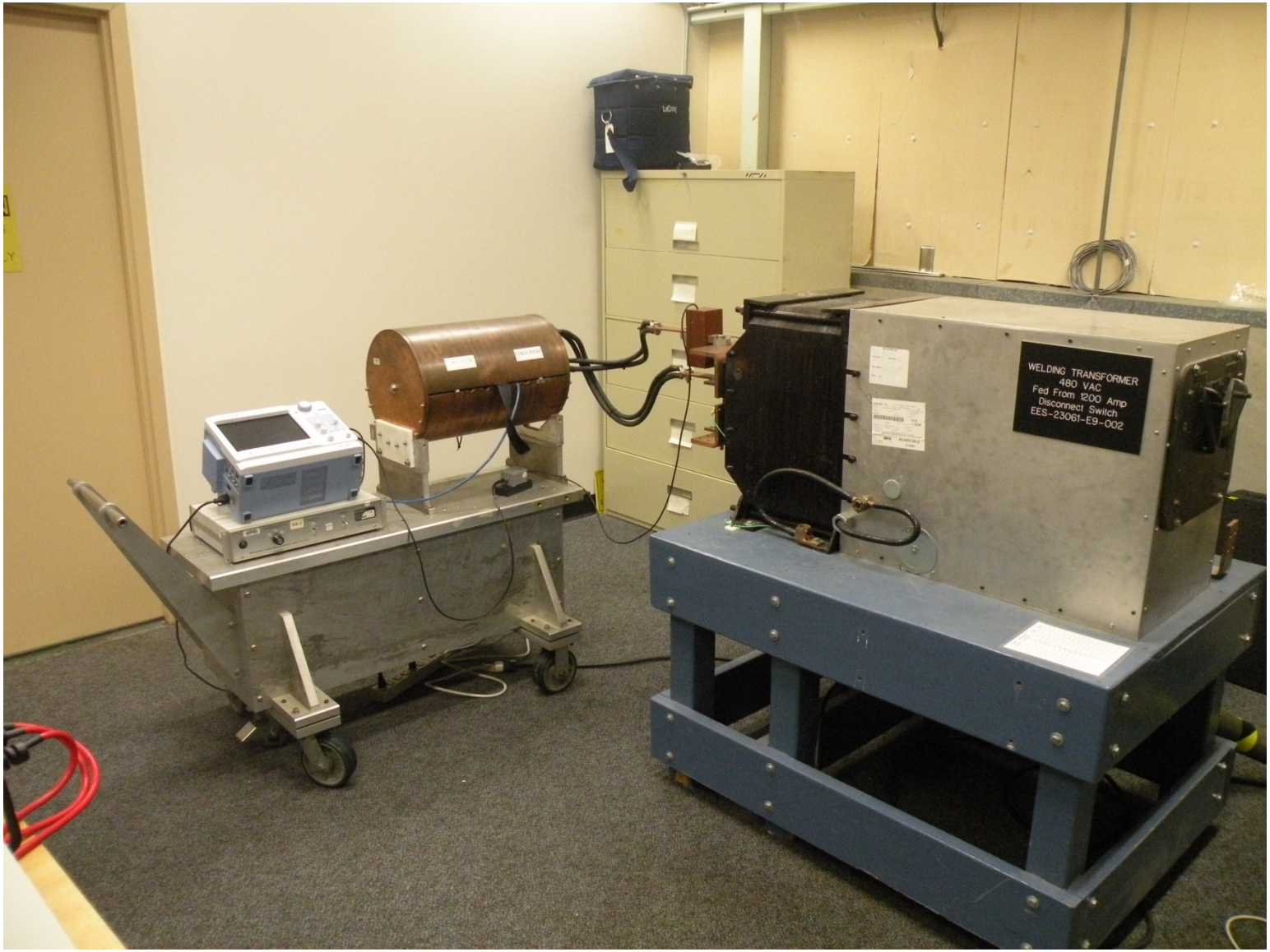

SRNL's High Current Lab – Weld Transformer

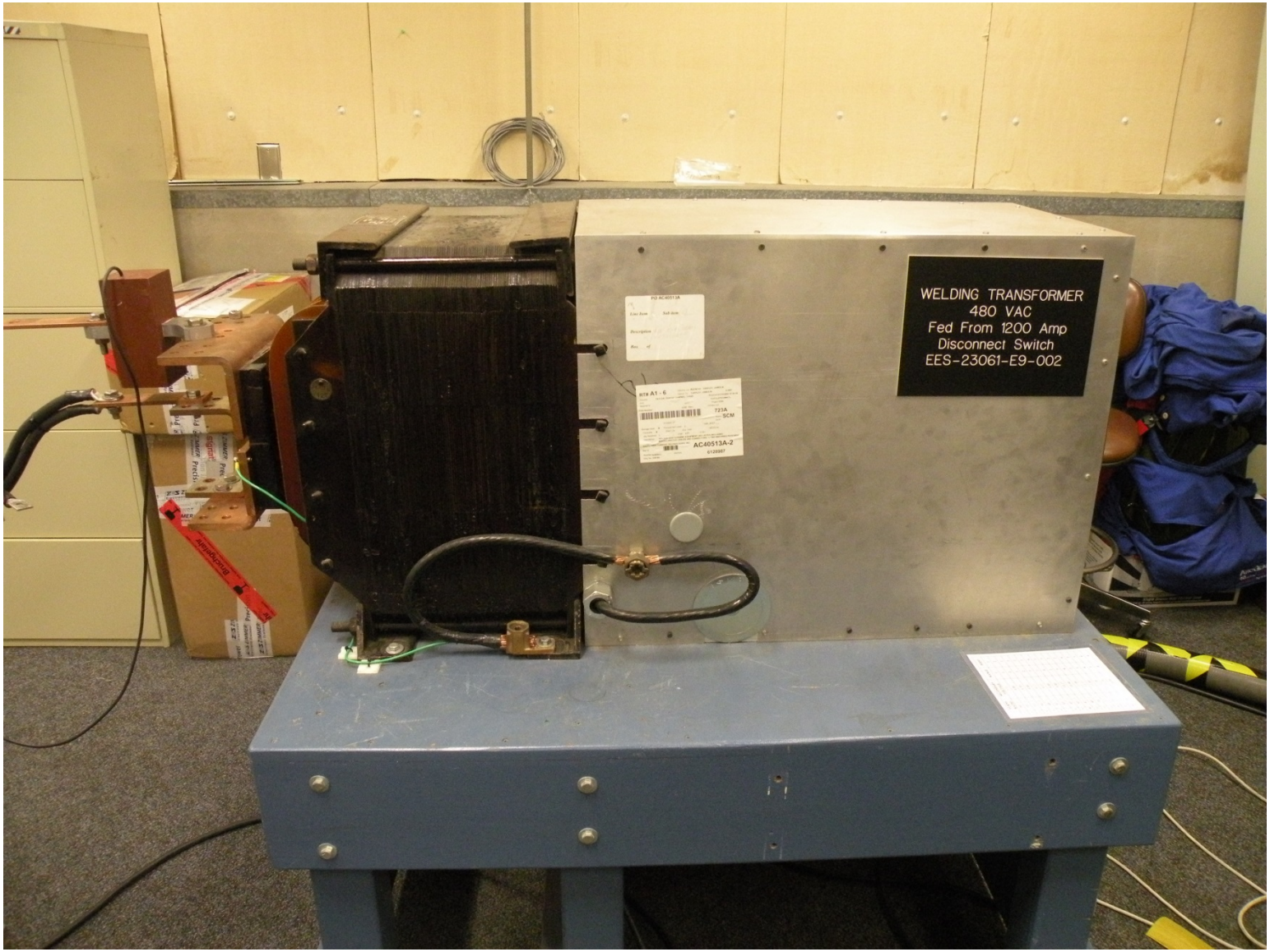

SRNL's High Current Lab – Faraday Cage and Measurement Equipment

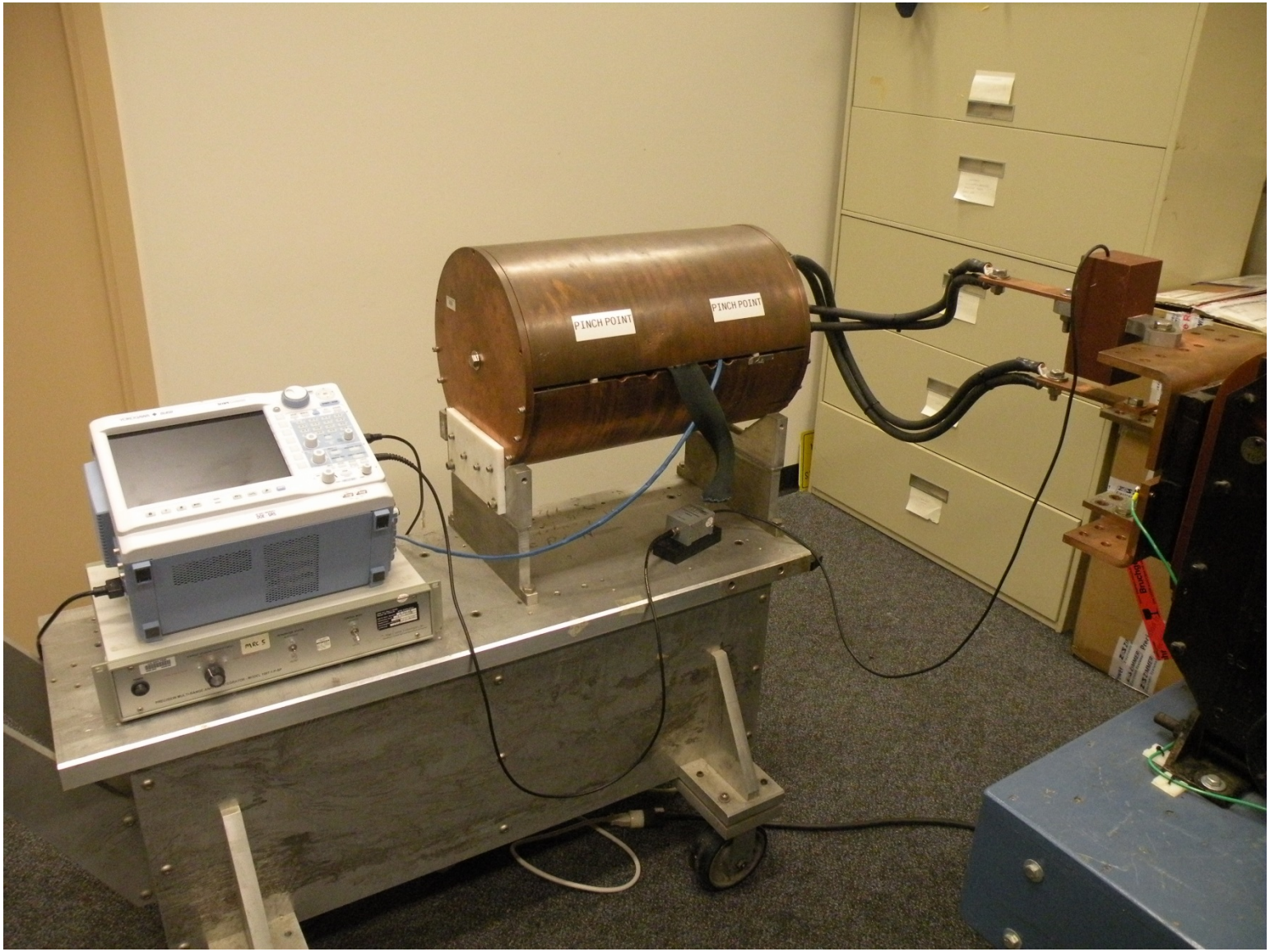

SRNL's High Current Lab – Machinable Rogowski Coil

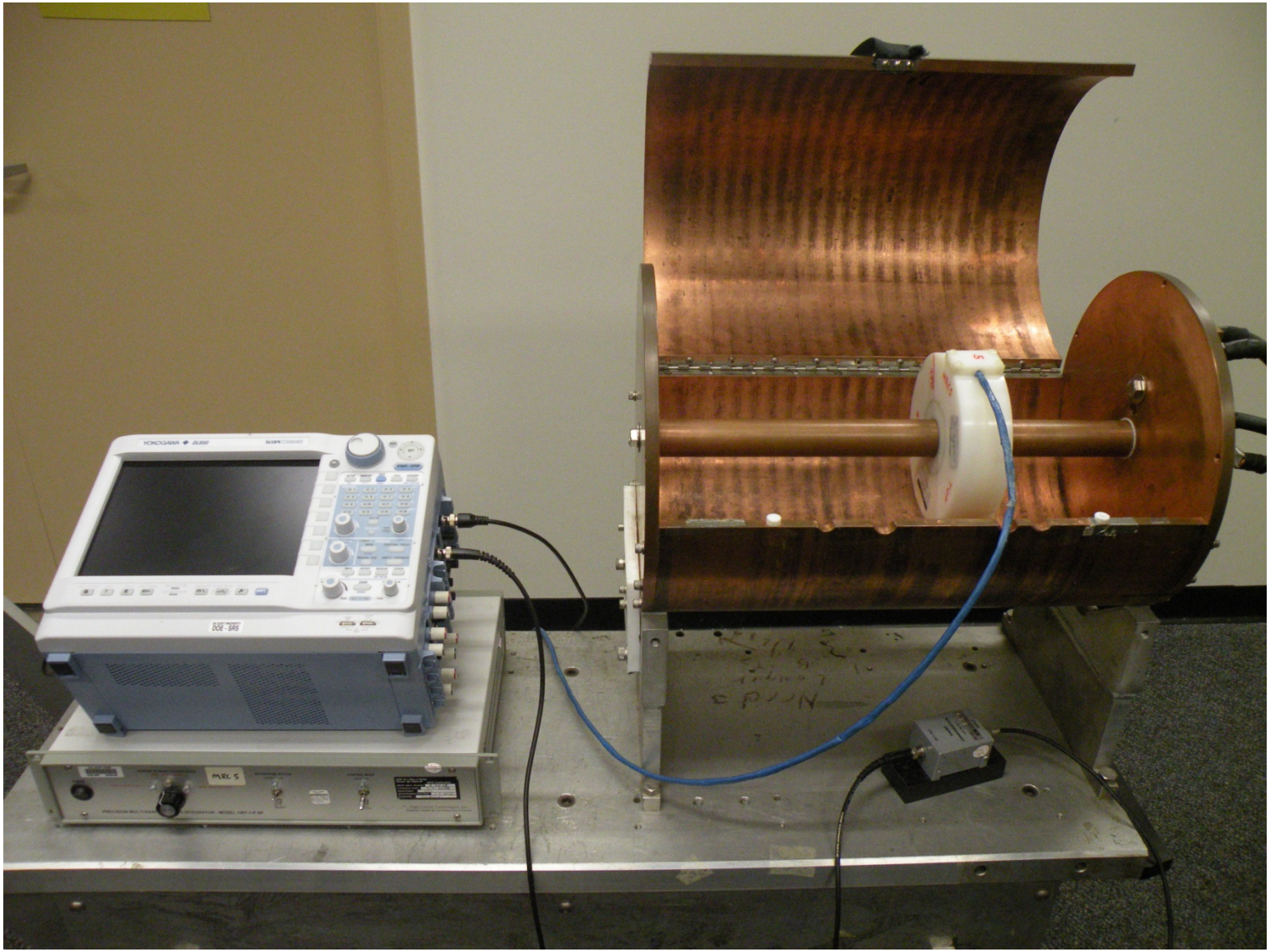

SRNL's High Current Lab – Hardware in the Loop Equipment

SRNL's High Current Lab – Current Amplifiers

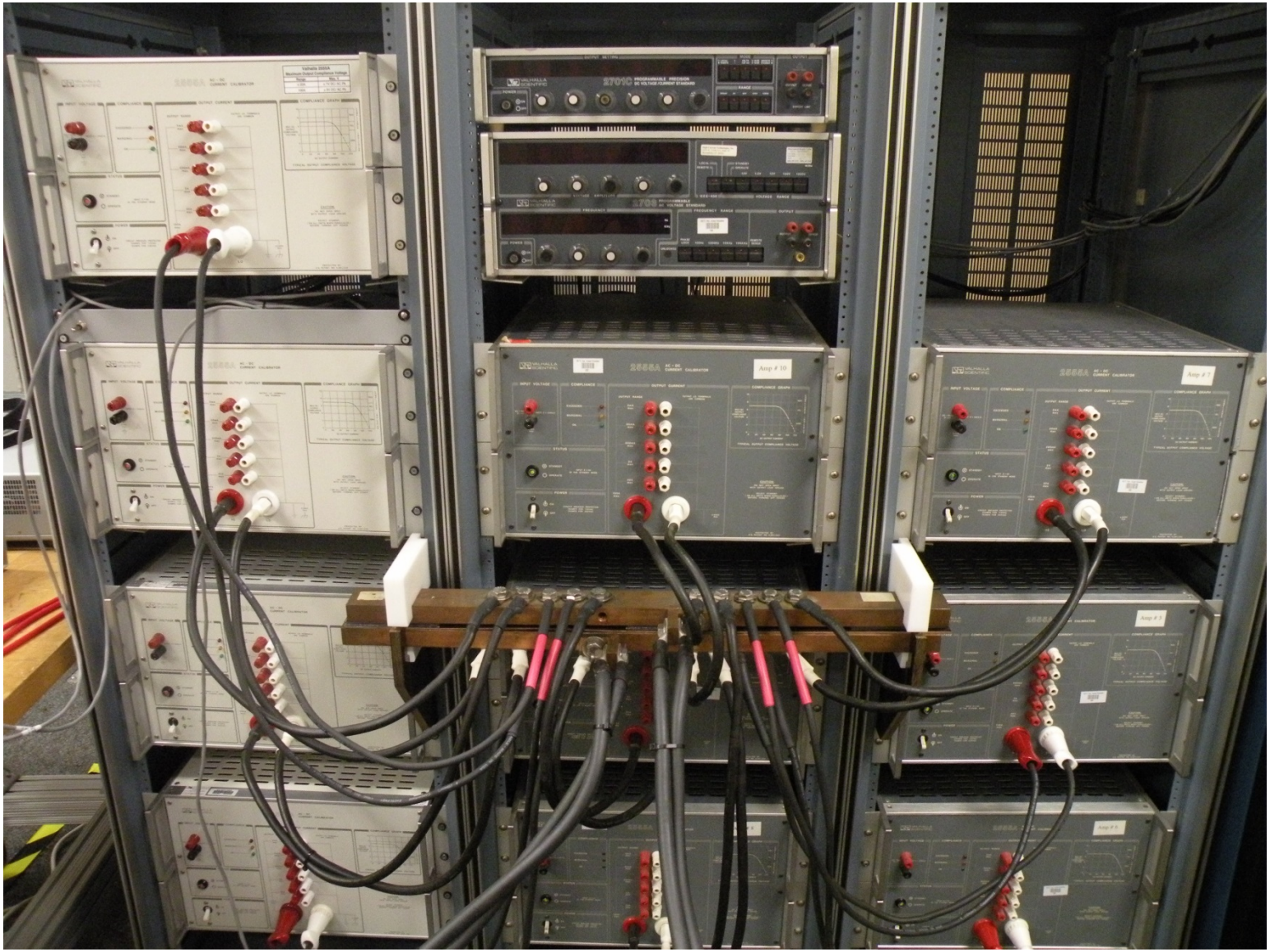

SRNL's High Current Lab – RTDS Equipment

SRNL's High Current Lab – Machinable Rogowski Coils and Current Transformers

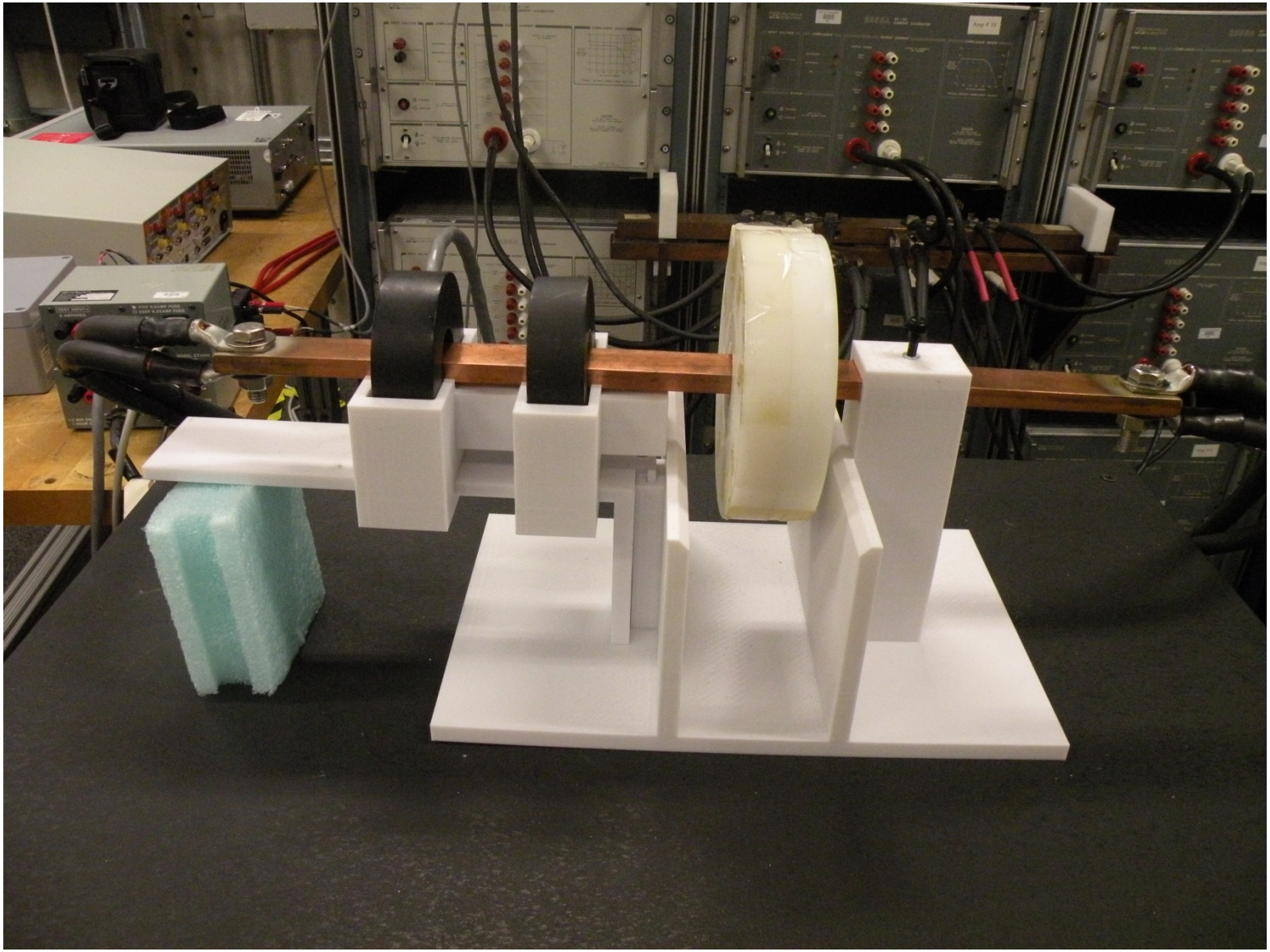

SRNL's High Current Lab – Hardware in the Loop Equipment

Machinable Rogowski Coil

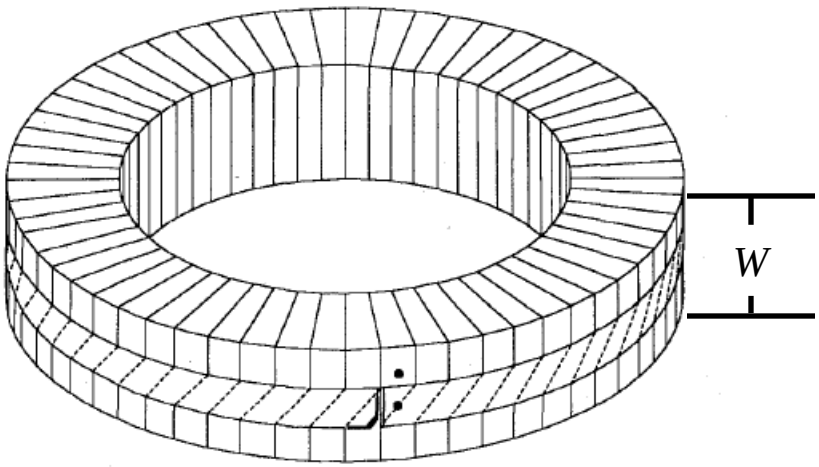

$$e_o(t) = M\,\frac{di(t)}{dt}.$$

$$M = \frac{\mu_o}{2\pi}\,nW\ln\frac{b}{a},$$

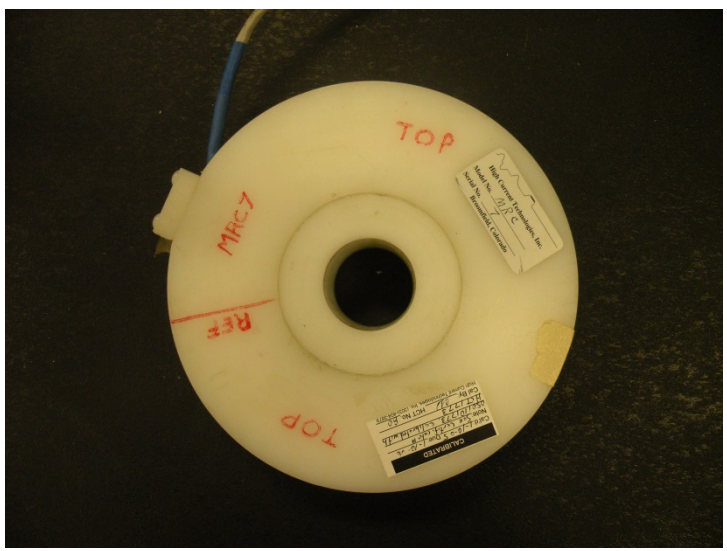

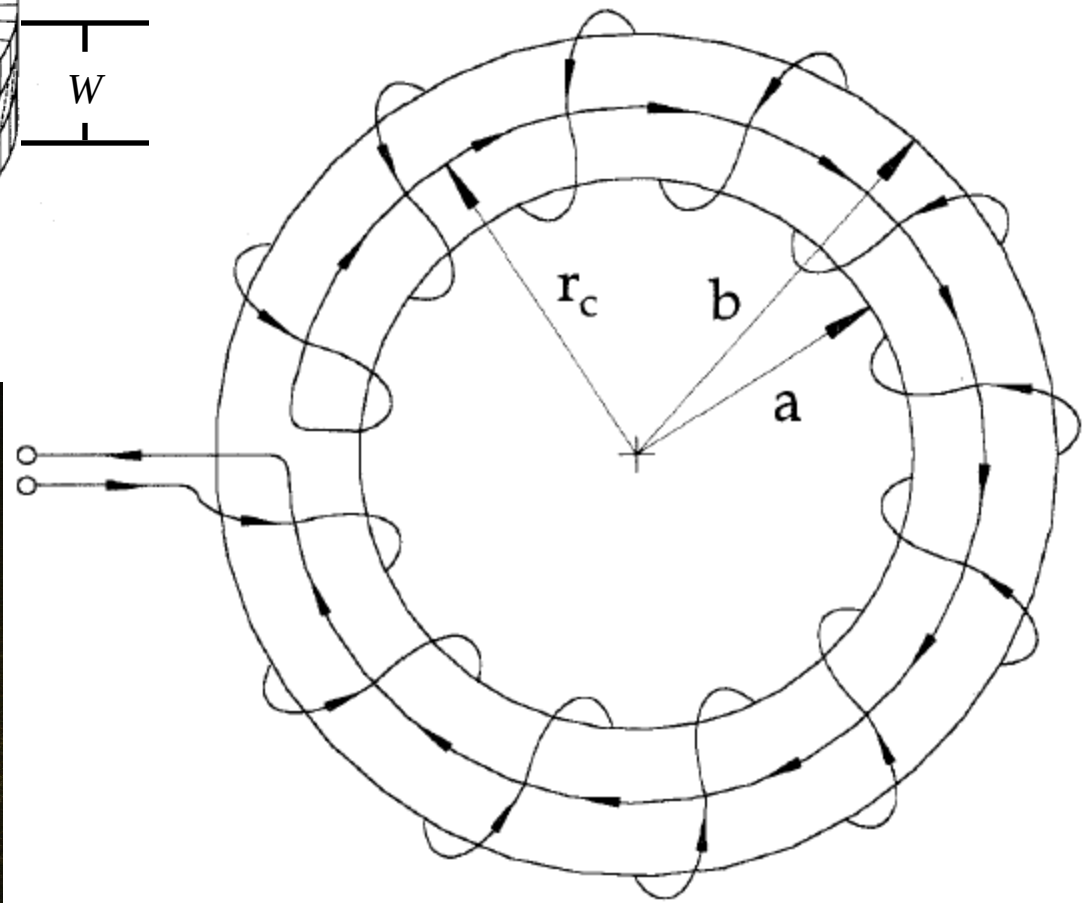

RSCAD Test System

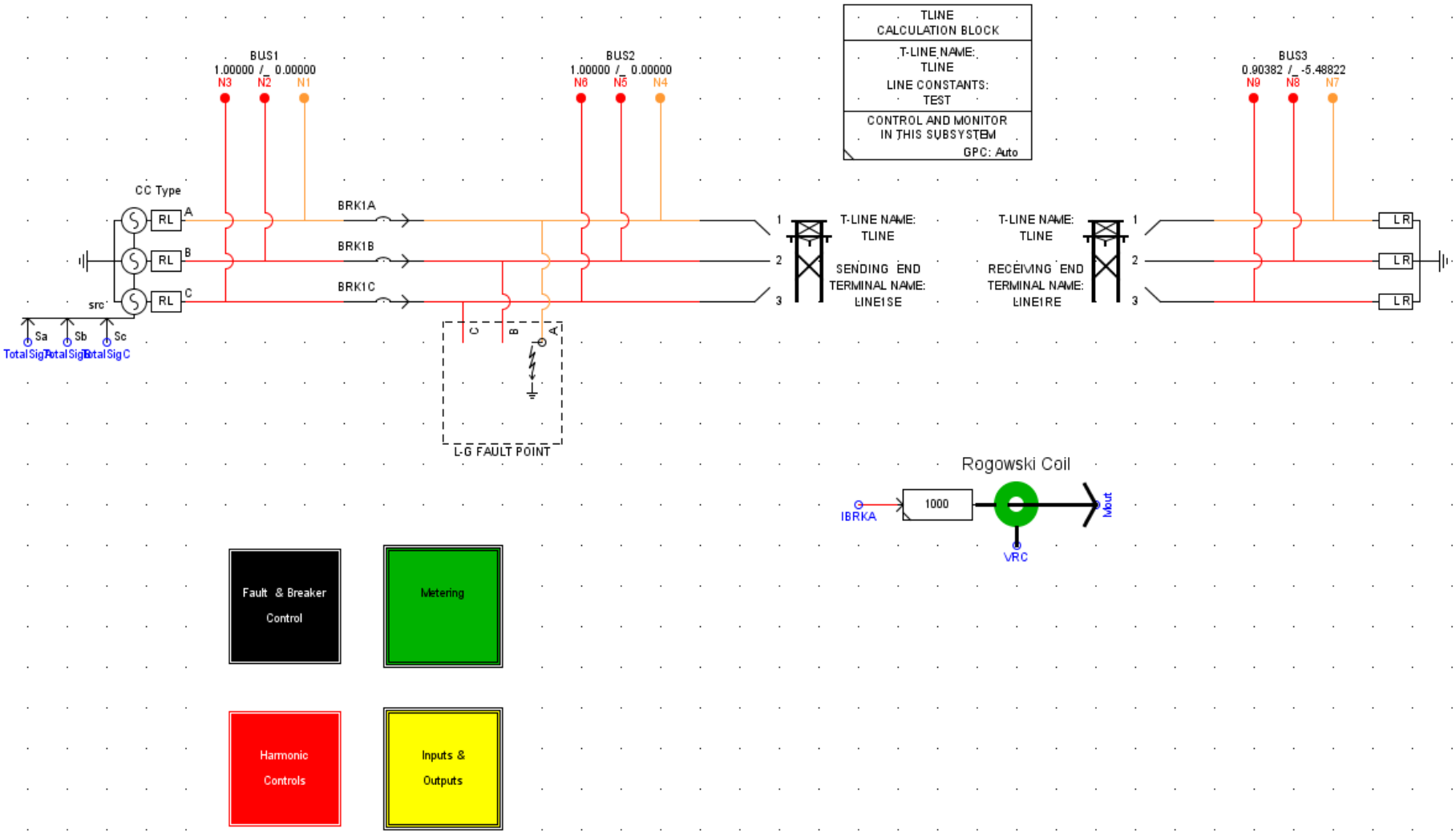

Harmonic Control of Amplifiers

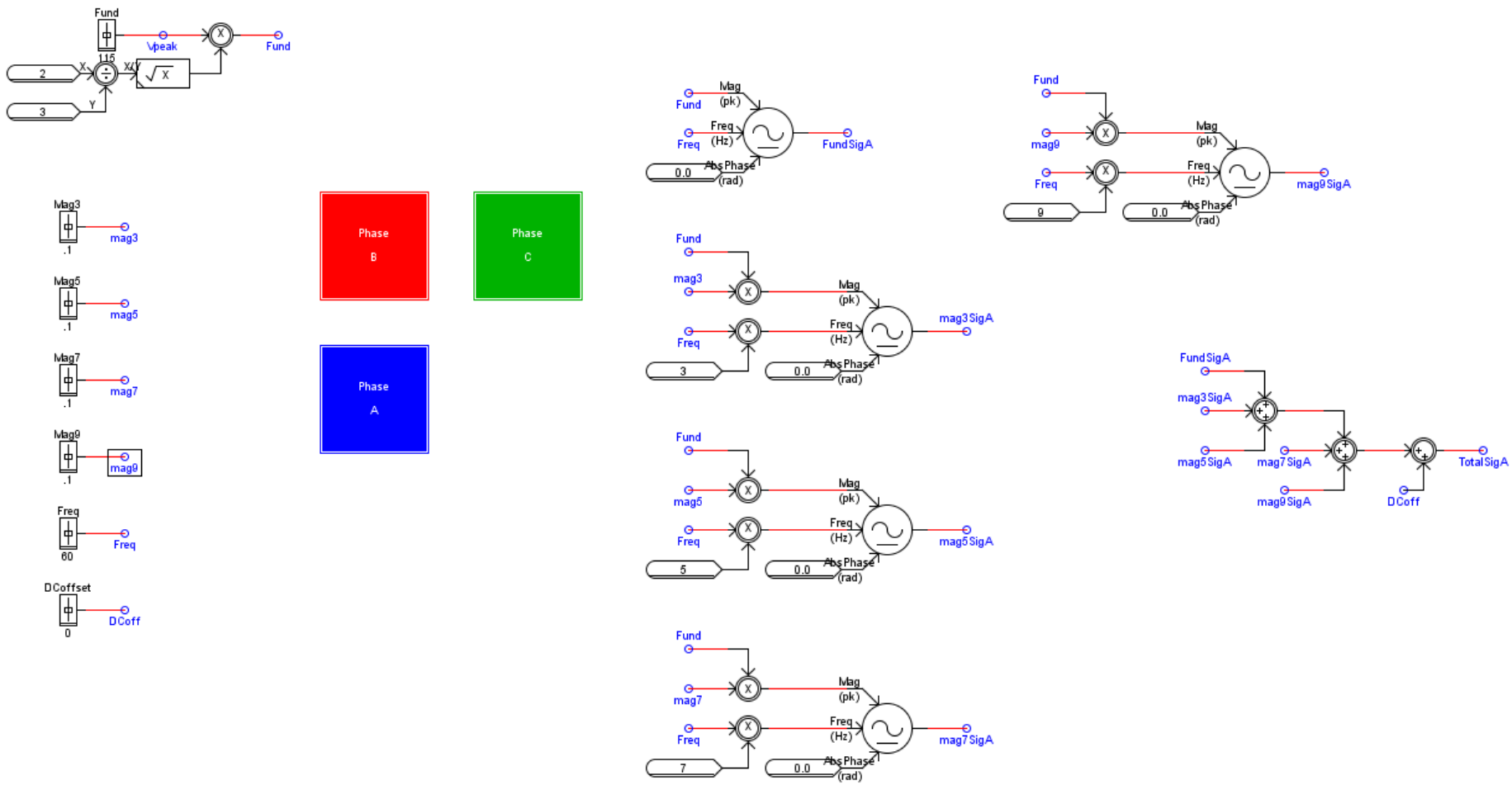

Comparison during Fault

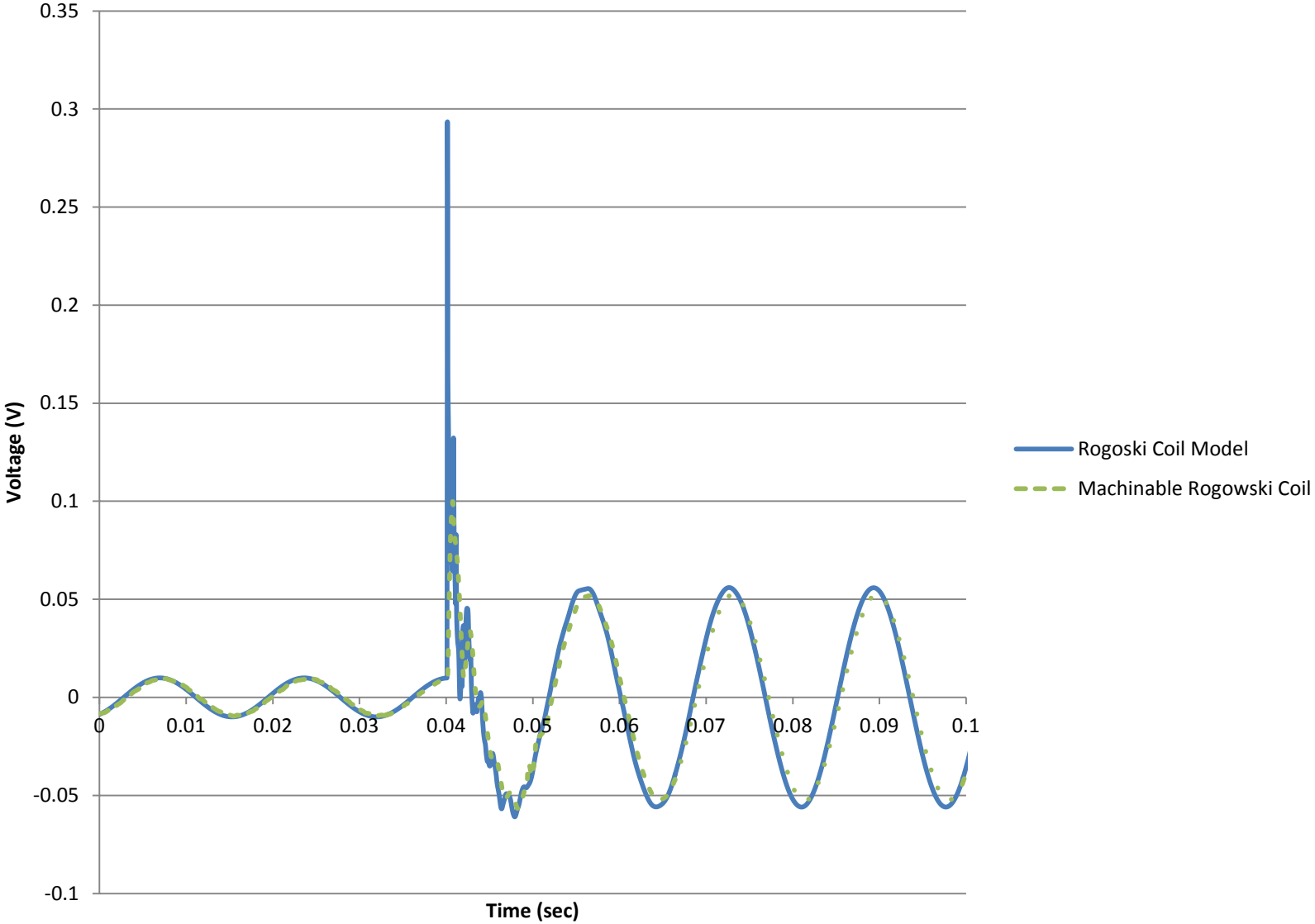

Comparison of Transient Response from a Increase in Amplitude

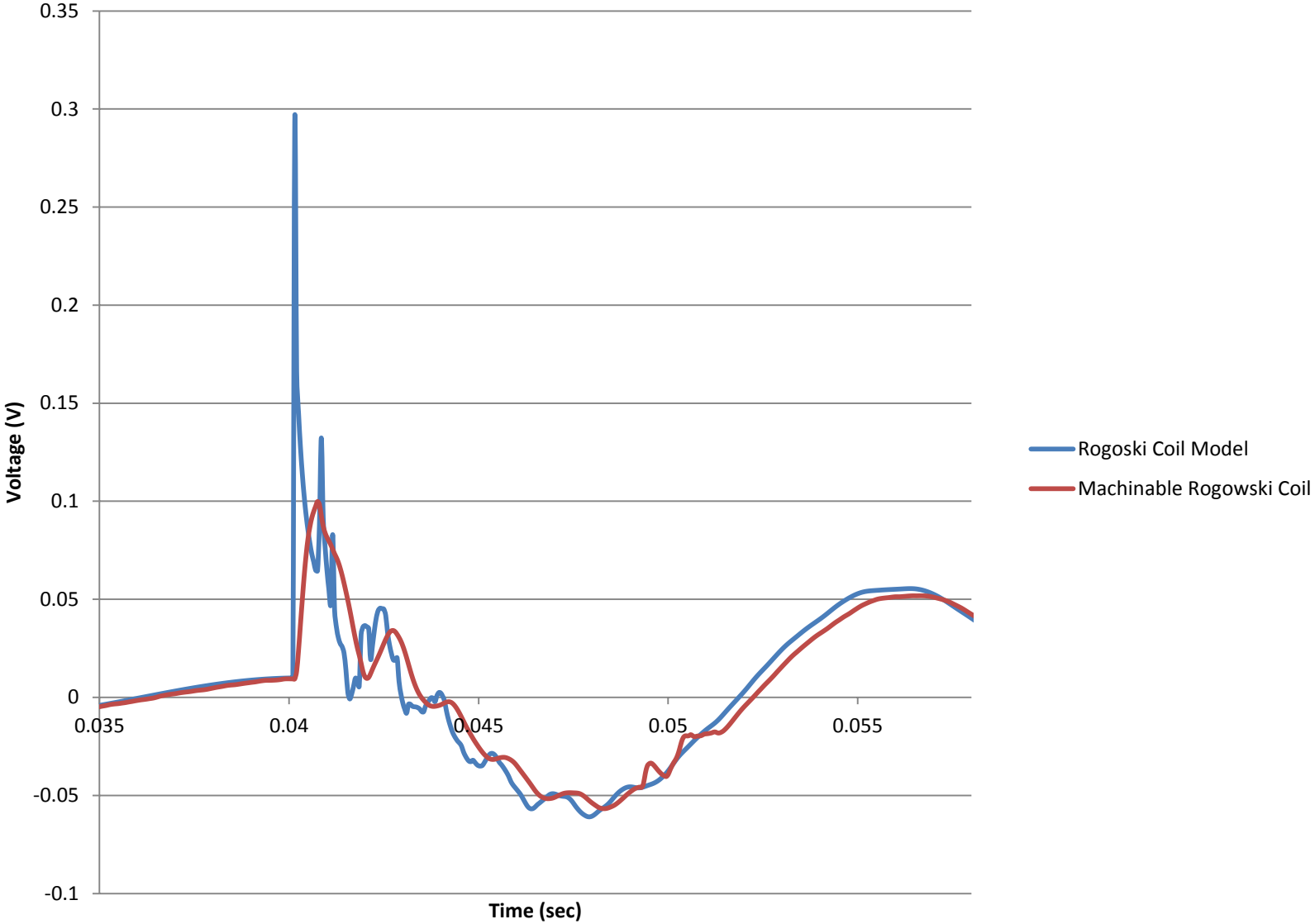

Comparison of a Increase in Frequency

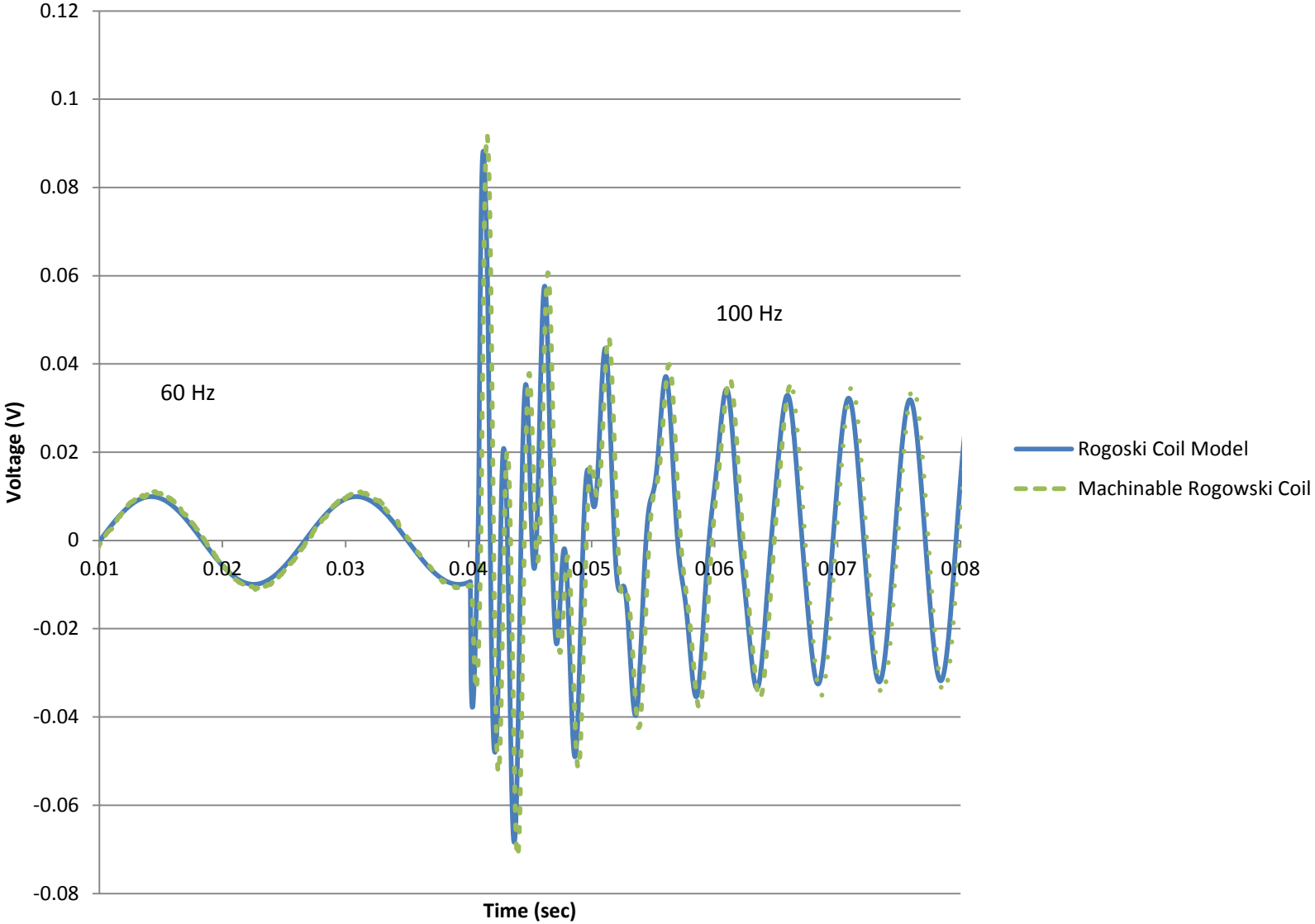

Comparison of Transient Response from a Increase in Frequency

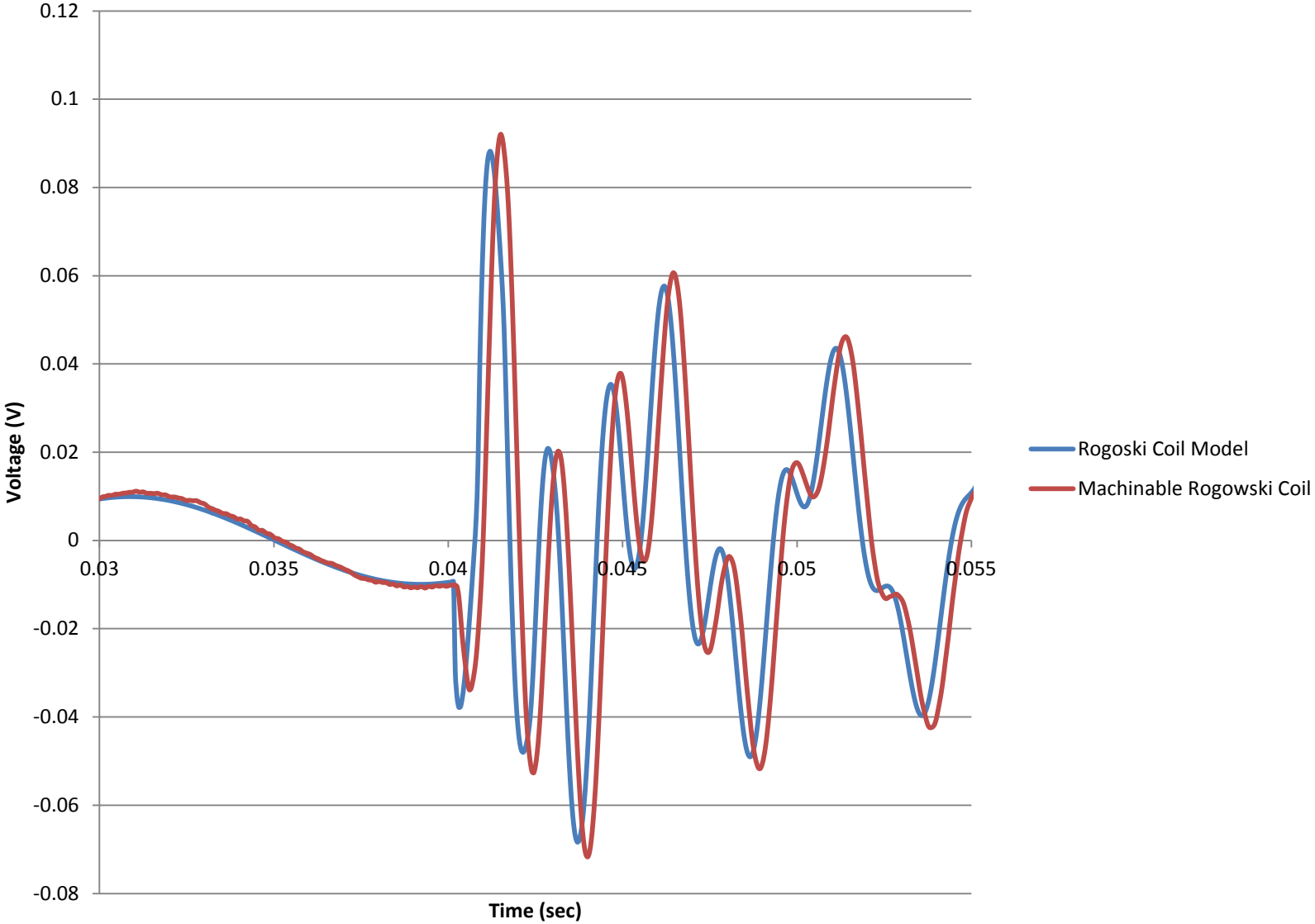

Comparison of a Decrease in Frequency

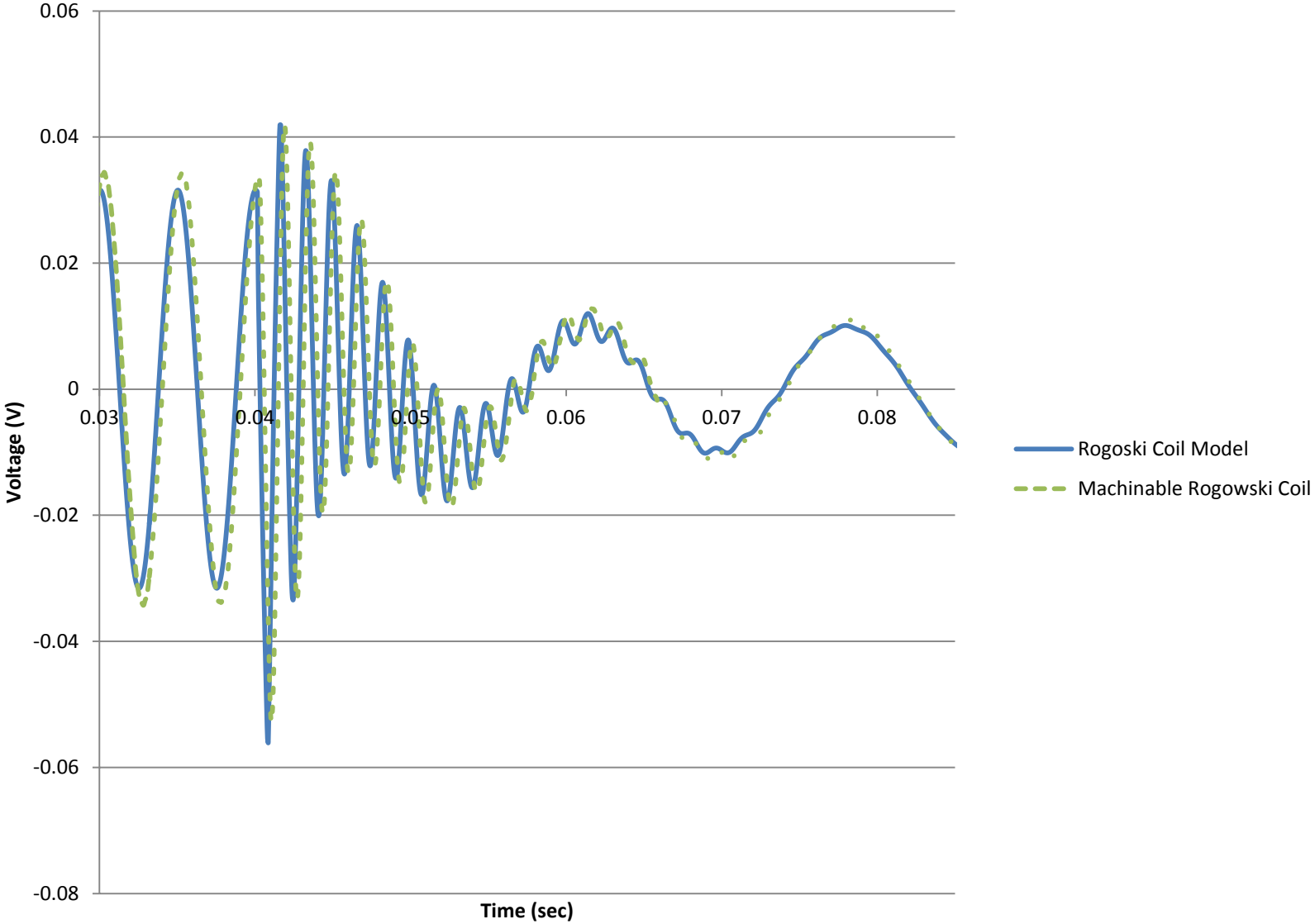

Effect of 3rd Harmonic Injection

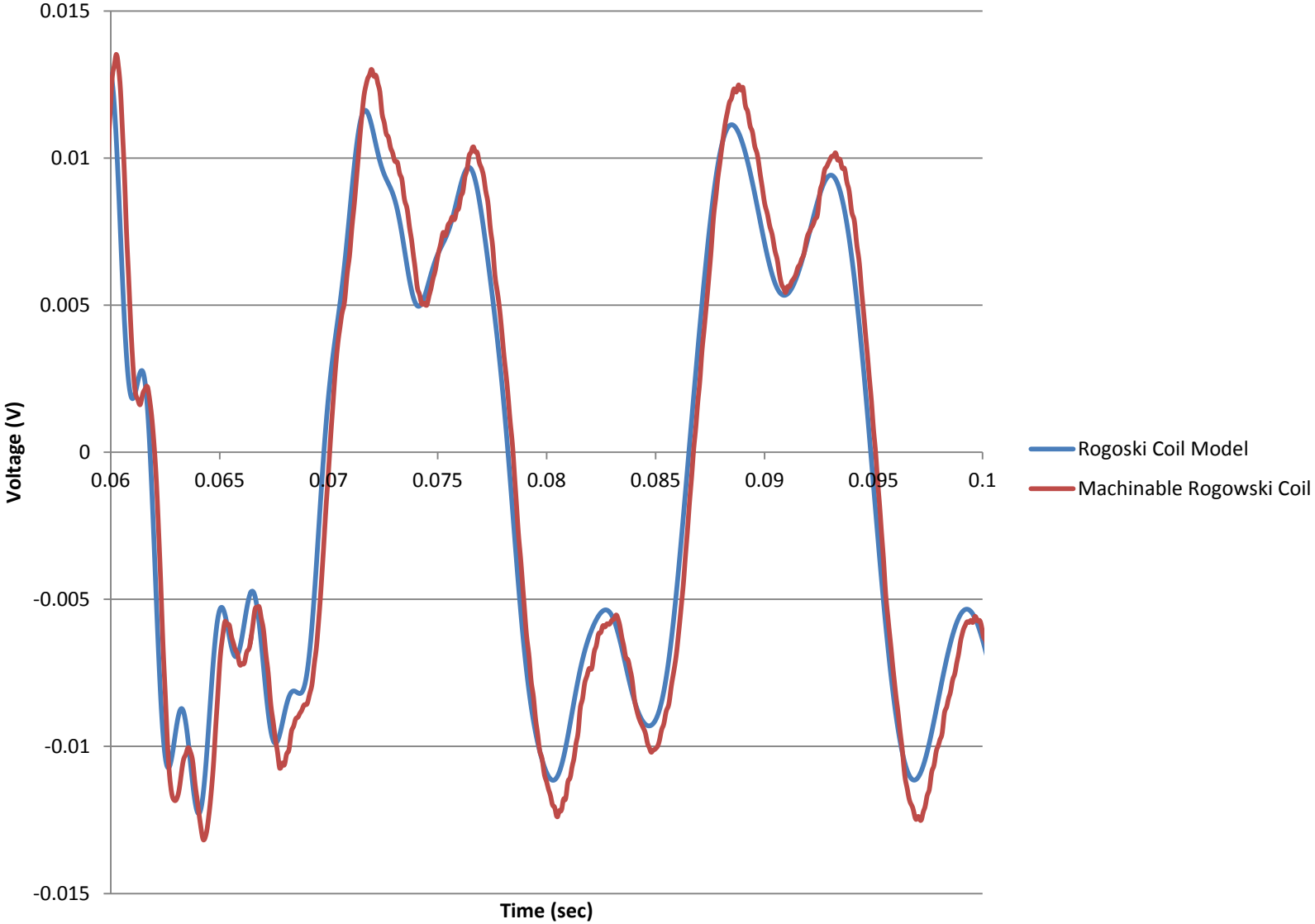

SRNL's High Current Lab – Future Plans

- Continue with high current calibrations
- Control the weld transformer with the RTDS
- Create voltage calibration system with Chroma high voltage supply and Zimmer PTs
- Create a power system calibration system ISO17025 which is mobile in the field with Zimmer power analyzer
- Work with wind turbine manufactures and other industries to preform high current/voltage calibrations

High Current Lab – High Voltage Source and Power Analyzer

Questions?