U.S. INDIA COLLABORATIVE FOR SMART DISTRIBUTION SYSTEM WITH STORAGE

Evolving future energy distribution grids

www.uiassist.org

2020 Microgrid R&D Program
Peer Review Meeting

UI-ASSIST: US-India collAborative for smart diStribution System wIth Storage

N. Schulz and A. Srivastava, Washington State University

Objectives & Outcomes

To evolve the future distribution grid that will allow the continuing increase of Distributed Energy Resources (DER) penetration towards improving reliability, resiliency, flexibility, and sustainability of electricity delivery

Project work will lead to the fully conceptualized smart distribution grid that optimally utilizes energy storage and distributed generation supported by well-planned workforce development and policy recommendation. Our team will validate developed solutions using ten different unique test beds and deployed in pilot phase at 10 different field demonstrations sites in the US and India.

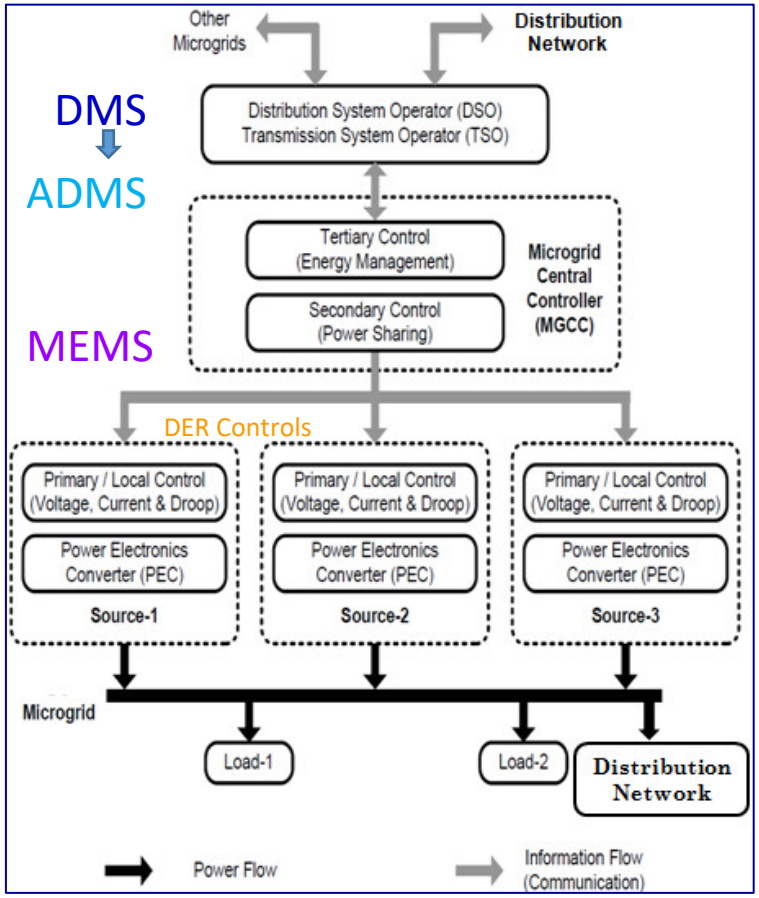

Technical Scope

To develop and demonstrate the DSO functions for optimal utilization and management of DER by interfacing with DER and microgrid control systems with high penetration of energy storage.

Life-cycle Funding Summary ($M)

FY17 & prior, authorized	FY18, authorized	FY19, requested	Out-year(s)
0	$1500 DOE; $1500 Matching	$1500 DOE; $1500 Matching	$4500 DOE; $4500 Matching

U.S. INDIA COLLABORATIVE FOR SMART DISTRIBUTION SYSTEM WITH STORAGE
Evolving future energy distribution grids
www.uiassist.org

+ PROJECT TEAM

India Leads
S. C. Srivastava
S. Mishra

US Leads
N. Schulz
A. Srivastava

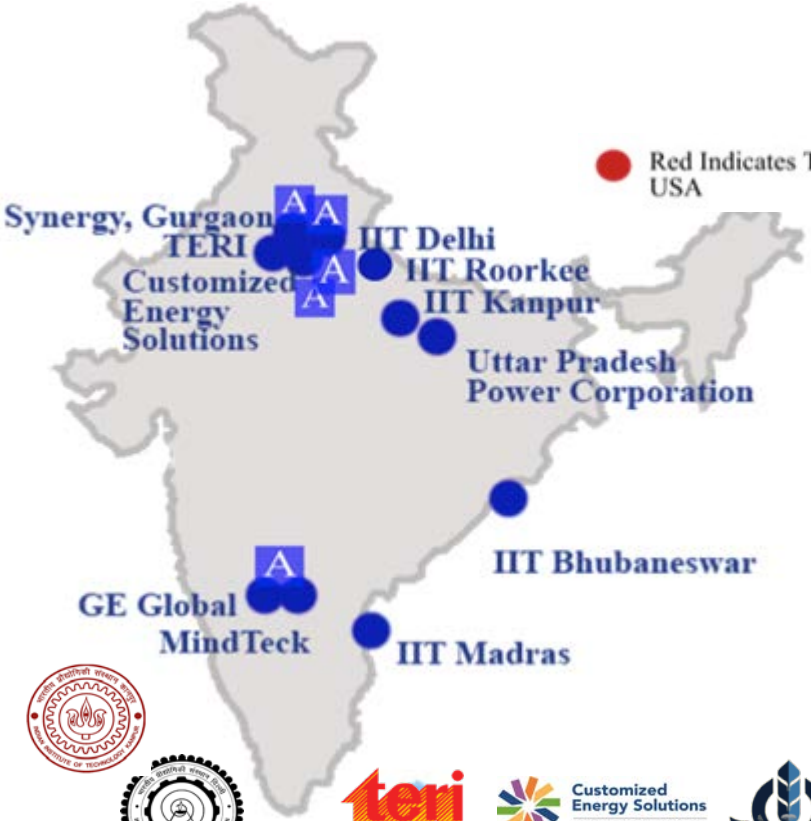

UI-ASSIST Phases and Themes (2017-2023)

PHASE 1: KICKOFF/FINALIZING OVERALL PROJECT MANAGEMENT ARCHITECTURE

PHASE 2: RESEARCH AND DEVELOPMENT ACTIVITIES

PHASE 3: LAB TESTING AND VALIDATION

PHASE 4: PILOT LEVEL FIELD IMPLEMENTATION

PHASE 5: IMPACT ANALYSIS AND POLICY RECOMMENDATIONS

PHASE 6: CAPACITY BUILDING AND WORKFORCE TRAINING

THEME 1: Finalizing Overall Project Management Architecture

THEME 2: Distribution System Modeling & Benchmark System Development

THEME 3: Energy Storage Modeling and Optimization

THEME 4: Microgrid and Active Distribution System

THEME 5: Cyber Security and Infrastucture

THEME 6: DSO Functions/Energy Management

THEME 7: DSO – Market and Regulatory Issues

THEME 8: Lab Testing and Validation

THEME 9: Field Demonstration

THEME 10: Impact Analysis and Policy Recommendations

THEME 11: Workforce Development

Theme 1: Overall Project Management

Key Activities:

- Paperwork done for all partners including National Laboratories.
- UI-ASSIST Joint meeting-cum-workshop held Dec 18-19 ,The India Habitat Centre, New Delhi, India
- UI-ASSIST 3rd Annual Meeting (Virtual) is planning to held during July 29-31, 2020
  - US-India technical progress reporting and discussions
  - US-India Theme wise meetings and mini-workshops
- Updating theme-wise reporting and monthly meetings
- Finalized few Fact sheets and rest are in progress.
- Monthly webinars sharing information between partners

Theme 2: Distribution System Modeling and Benchmark System Development

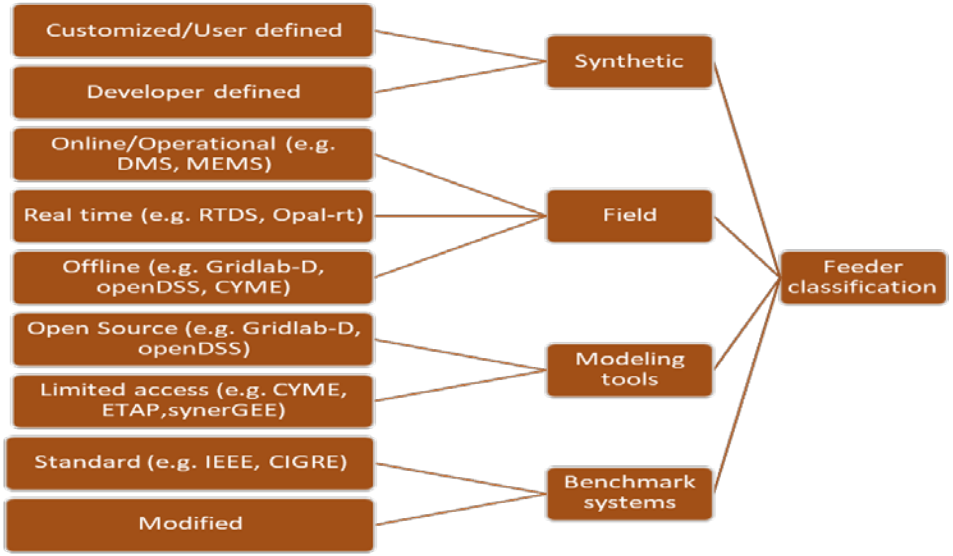

Key Activities:

- WSU studied gap analysis and developing Pullman distribution system as semi-urban case study and Spokane distribution system modelling (i.e. Urban pilot) as well as cyber modeling.
- WSU completed framework for developing synthetic feeder models and identified the technical requirements of smart grid communication networks, including traffic-forwarding and end-user devices
- Burns and McD, ETAP and TAMU are developing rural, semi-urban and urban synthetic distribution system models.
- VCS supporting in finalizing feeder model plan.
- NRECA will explore developed models in this project and adopt them as per the requirements.

Theme 3: Energy Storage: Modeling and Optimal Management

Key Activities

- A Fuzzy EV battery charging management system has been developed and validated by TAMU. A decision-making algorithm for the distribution grid operator has been developed.
- WSU is working on selection of storage system model to incorporate in WSU distribution system for demonstration.
- MIT is making progress on Li-Ion equivalent circuit model for estimating SOC and parameters using recursive least squares
- LBNL and PNNL are contributing towards detailed storage models and DER-CAM based analysis
- ETAP is supporting to explore the analysis for storage application.
- Field experience with industry partners (AVISTA and SnoPUD)

Theme 4: Microgrid and Active Distribution System: Converter, Controller and Protection

Simulation of multi-inverter AC microgrids is performed by TAMU to study of the protective relaying implementation.

Analysis of LV microgrids was conducted under steady state and faulty conditions for different scenarios

Different control modes of inverters were implemented on simulation testbed.

Expansion of the grid with different types of inverters and different types of load is in progress.

Implementation of the digital protection system for microgrid is underway.

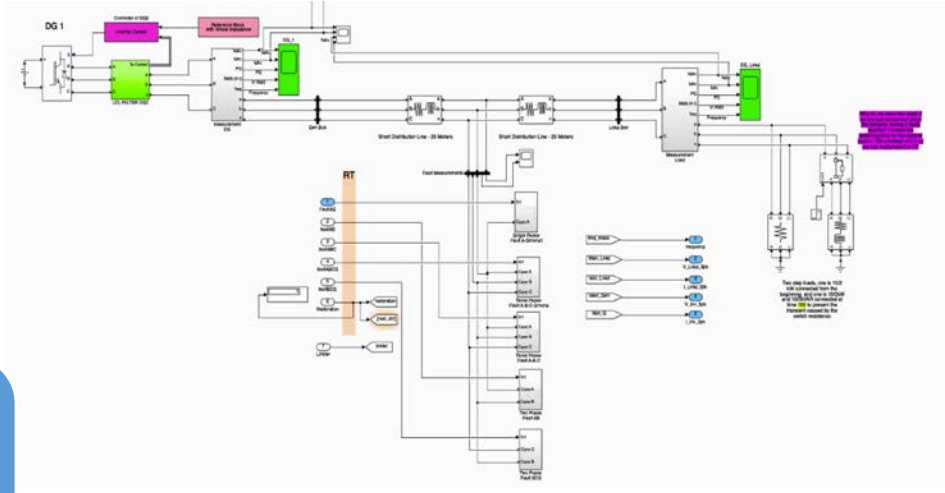

Fig. Simulation testbed for multi-inverter AC microgrids

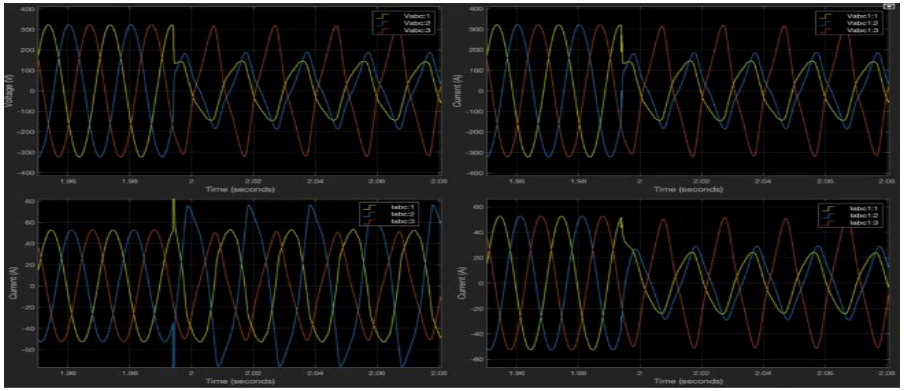

Fig. Results of Phase-to-Phase Fault

Theme 4: Microgrid and Active Distribution System: Converter, Controller and Protection

WSU team developed voltage control and energy management strategy for active distribution system with grid connected DC microgrid (DCMG) with hybrid energy resources

Architecture of test system is shown in top figure. It is explored under grid connected and islanded mode of operation

Simulations of system is explored under worst conditions and result is shown in b bottom figure .

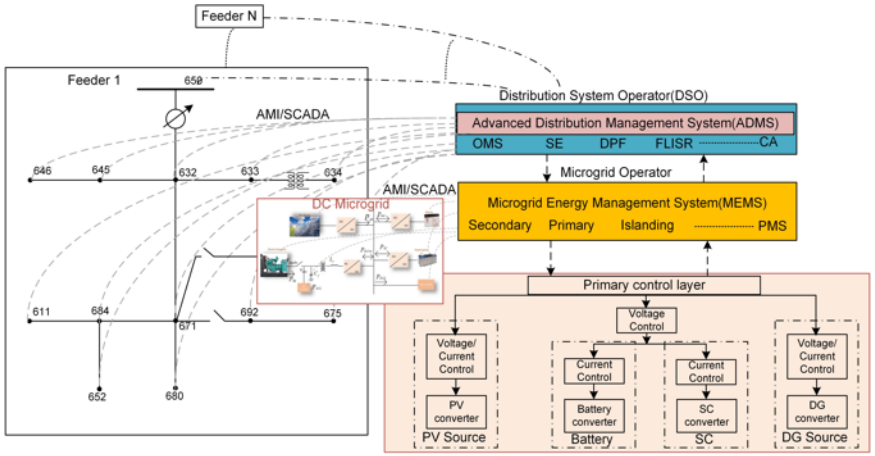

Fig. Operational diagram of DC microgrid connected 13 bus distribution system.

Key Activities:

- WSU implemented droop primary control in the designed islanded microgrid system for rural electrification.
- WSU is discussing with IIT-Roorkee about possibly modeling the system in their test bed.
- Burns & McDonnell working on microgrid controller capabilities.

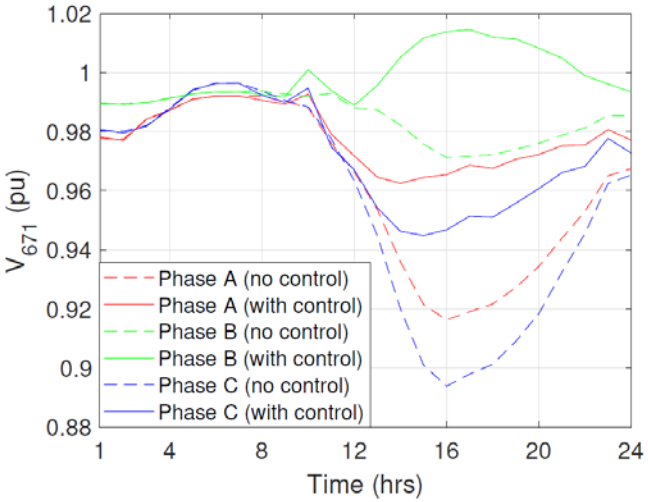

Fig. Voltage improvement at bus 671 with and without voltage control from DCMG

Theme 5: Cybersecurity: Infrastructure and Measures

Cyber-Physical simulation environment for distributed DER operation (WSU)

- The platform integrates both the OpenDSS physical system simulator and the Mininet network emulation software.
- Platform enables the monitoring and control of smart inverters through the IEEE 2030.5 network protocol.
- WSU modeled DER devices within the Miramar feeder model. Malicious 2030.5 network messages sent to the DER devices to impact the feeder.
- Bottom figures demonstrate the voltage profile at the PV, Q and S behavior at the feeder, and P behavior at the PV resulting from an incorrect VAR-VOLT response.

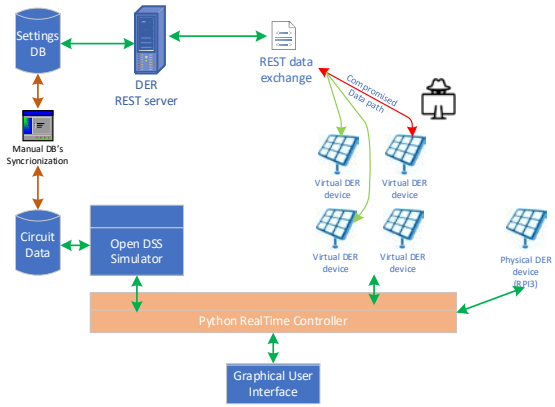

Fig. OpenDSS/Mininet based co-simulation platform.

Key Activities:

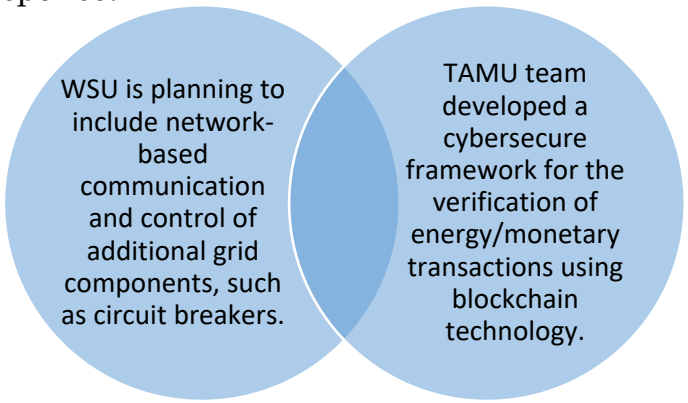

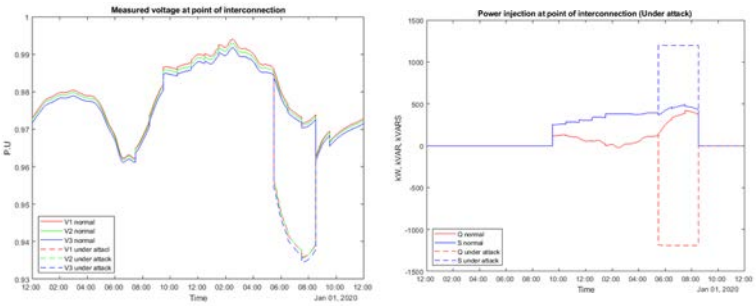

Fig. System response voltage and power injections at POI

Theme 6: DSO Functions/Energy Management: Forecasting, MEMS, ADMS, Control and Optimization and Planning

HNEI/ ETAP: Solar/ PV monitoring
- ETAP: probabilistic forecasting with confidence level
- HNEI: solar forecasting system using 3D camera.

WSU/HNEI: Machine learning
- Disaggregation of behind-the-meter (BTW) PV from net load with Hawaii.

WSU/ MIT: Distributed VVC
- Distributed Volt/Var Control using Proximal Atomic Coordination (PAC)
- Distributed OPF for IEEE 123 bus system.

WSU: Network clustering
- Distributed generators/ electric vehicle in distribution system.

TAMU: Reliability
- Distribution system with PV systems at the customer end.

WSU: Data analytics
- Using sensor data (i.e anomaly detection using μPMU)

PV/Load Disaggregation

- Customer PV is behind the meter with limited monitoring and thus generally invisible to utilities and system operators
- Data-driven algorithm to estimate the power generation output of invisible solar panels

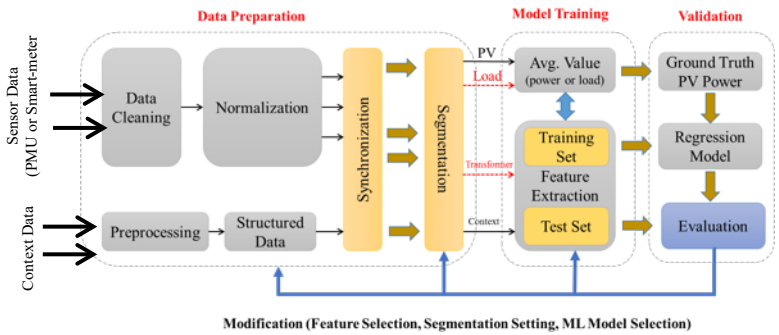

Fig. Load/DER Disaggregation ML Pipeline.

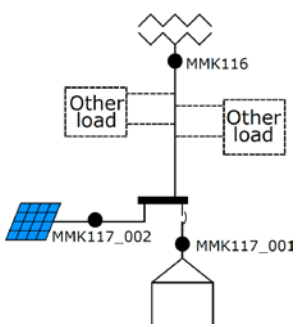

Fig. Real field data collection schematic.

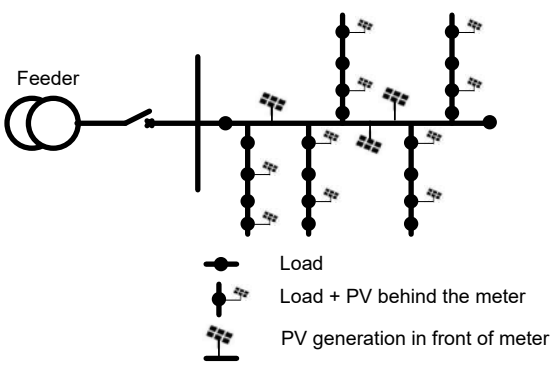

Fig. Distribution system with solar PV generation.

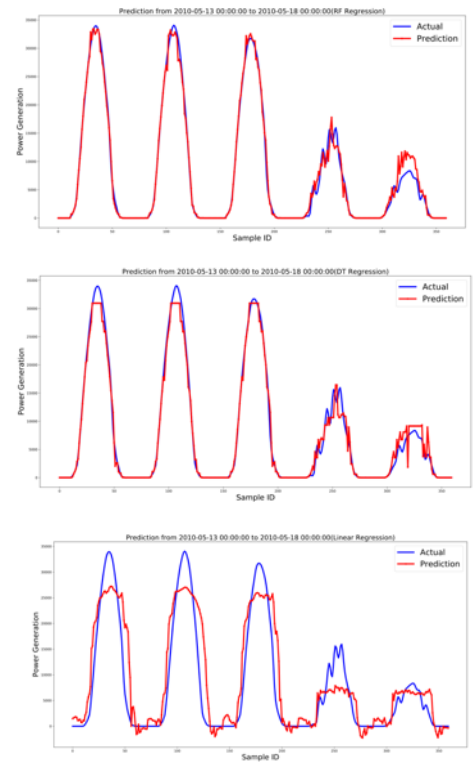

Fig. Daily Predictions, simulation data

Load and PV Forecasting

- ETAP has developed quantile or probabilistic forecasting successfully.
- Least Absolute Deviation (LAD) is used for development
- Load forecasting using hyper deep learning method is also performed by ETAP
- Results are comparable and slower than linear regression

Fig. Quantile or probabilistic load forecasting

Key Activities:

- ETAP is continue to develop different load forecasting models.
- HNEI has converted satellite-based irradiance forecasts from the period of October 2019 to January 2020 into animated gifs for sharing.
- HNEI planning to use micro synchrophasor data to detect solar-induced variations between areas of the island.

Volt-Var Control

- WSU implemented a centralized AC Optimal Power flow (ACOPF) for three-phase unbalanced distribution power systems in MATLAB and validated using OPENDSS-distribution power system solver(i.e. top figure)
- WSU also developed localized volt-var control and optimization algorithm.
- MIT developed distributed optimization based on proximal atomic coordination (PAC) and current injection (CI) method.
- Convergence results from distributed CI optimization on IEEE node network are shown in bottom figure.

Key Activities:

- WSU is working on centralized, localized and distributed volt-var techniques .
- MIT is planning to expand distributed PAC optimization to Mesh and unbalanced networks..

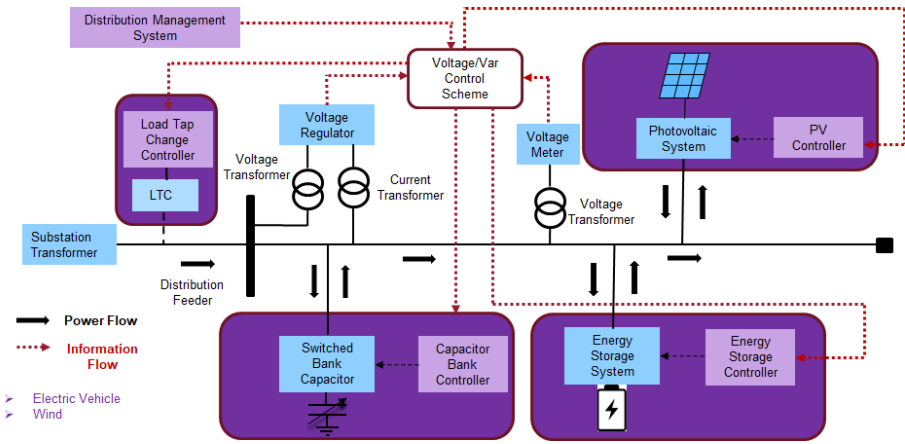

Fig. Centralized ACOPF architecture.

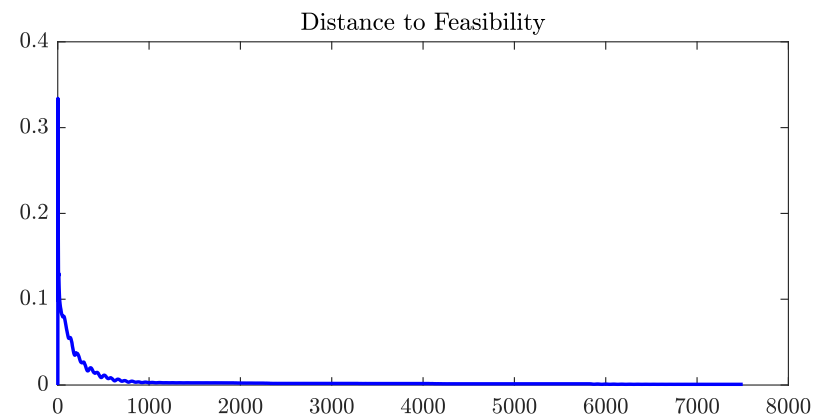

Fig. Results from convergence metric on IEEE 13 node system.

Reliability Assessment

- TAMU performed an analysis of the load on the distribution system from the residential systems with and without the PV systems.
- The average annual load is reduced by 40% with 100% penetration of rooftop PV systems.
- Results with and without PV penetrations shown in below figures
- TAMU developed a two-state model for the battery system and the bi-modal inverter to assess the reliability of battery storage systems.

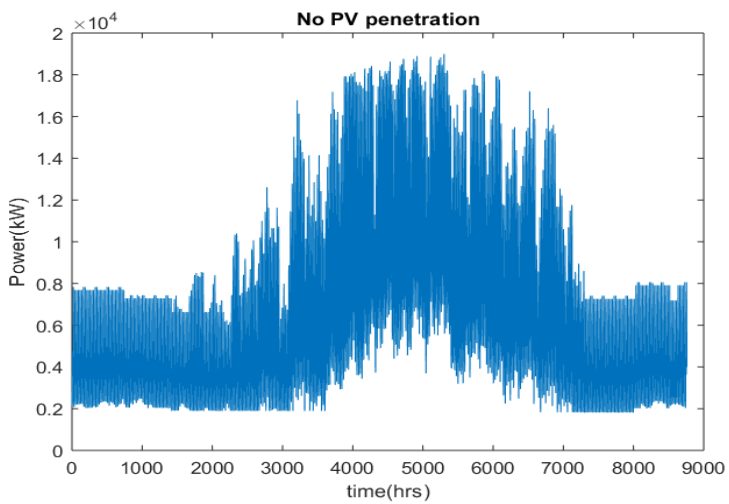

Fig. No PV penetration .

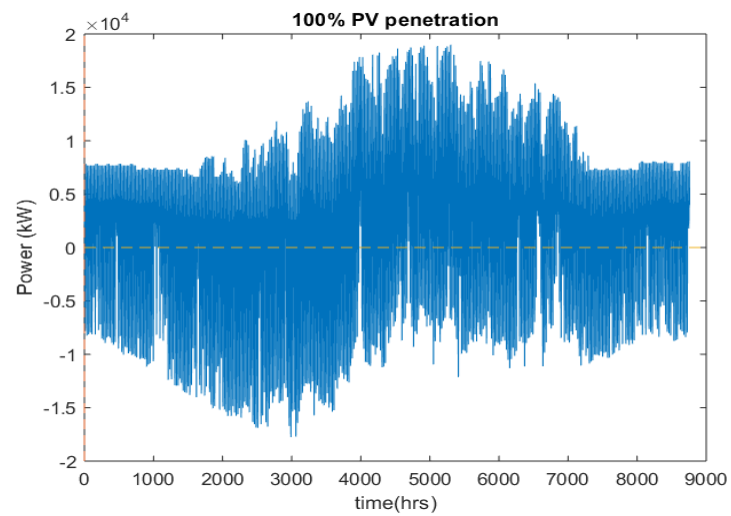

Fig. 100% PV penetration.

Theme 7: DSO- Market and Regulatory Issues

MIT: Retail market mechanism	• Optimally managing and scheduling DERs.
WSU and MIT: Retail Market Regulation (Clearance)	• If distribution connected resources are cleared by ISO markets, how will federal and local regulations overlap?
WSU: TES environment	• Multiple possible transactions (centralized, peer-peer).
MIT: Proximal Atomic Coordination algorithm (PAC)	• Focusing on the privacy for market applications.
MIT and IITD: Retail market	• Interactions of the DSO and TSO.
MIT: Testbed	• BeagleBone Blacks to run the proposed retail market.
WSU: Separate Retail Market Regulation	• If separate retail markets are set up, should the market rules be under local government only?
n-Grid market participation	• Participation of aggregator-nano grid interaction in the wholesale market

DSO Market: Retail Market Mechanism

- DER scheduling and real-time market settlements at distribution-level Locational Marginal Price (d-LMP)
- Each primary feeder has a DSO_r which coordinates an energy market
- Bi-lateral agreement between agents and DSO
- Enabled by distributed optimization algorithm: Proximal Atomic Coordination (PAC)

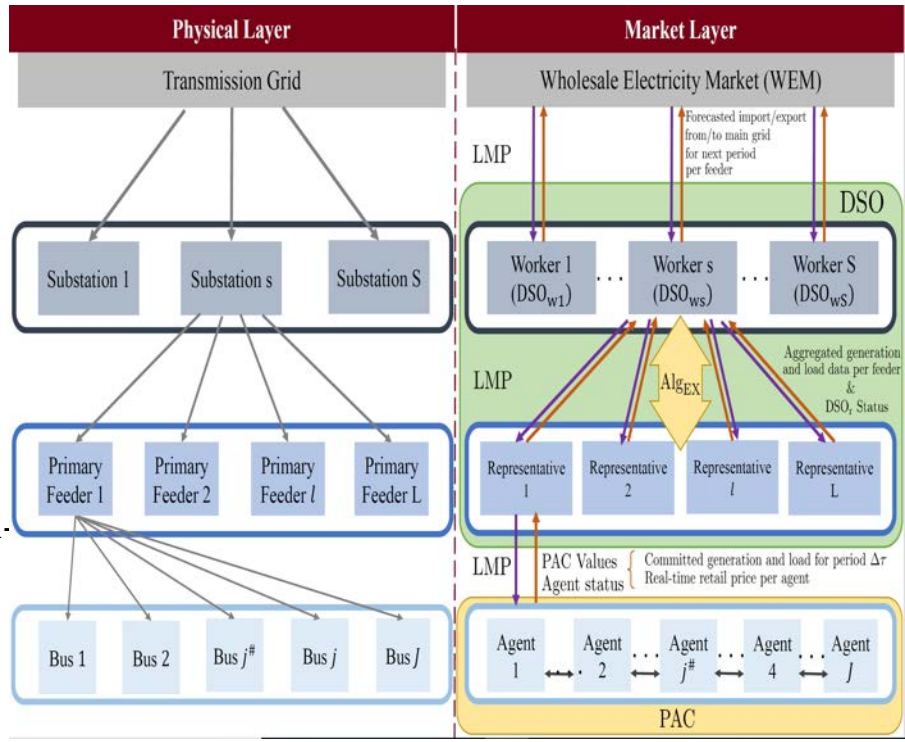

Market Steps:

- Agents negotiate with neighbors to determine d-LMP and load/generation
- Upon reaching agreement, enter into bilateral contract with DSO_r
- Market clears every Δτ minutes
- DSO_r pays DERs (DGs and DRs) at d-LMP
- Loads pay DSO_r at d-LMP for consumption

Results: Retail Market

Case Study: An 84-node Distribution Grid in Komae City, Japan

- 7 DGs, 24 hour simulation
- Potential Savings from the Retail Market

Komae-city, Tokyo, Japan

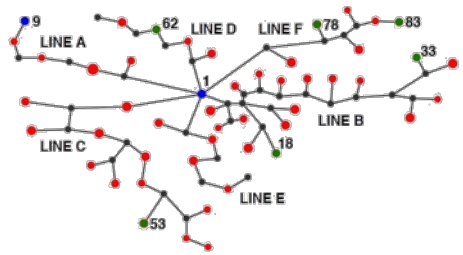

Increase in Revenue for DSO with Energy Market:

$$\mathcal{P}_{\text{DSO-increase}} = \mathcal{P}_{\text{DSO}} - \mathcal{P}_{\text{no-DSO}}$$

Where: $\mathcal{P}_{\text{DSO}} = \underbrace{\mathcal{R}^{\text{L}}_{\text{DSO}}}_{\text{Revenue from Loads}} - \underbrace{\mathcal{C}^{\text{flex}}_{\text{DSO}}}_{\text{Payments to DRs}} - \underbrace{\mathcal{C}^{\text{DG}}_{\text{DSO}}}_{\text{Payments to DGs}} - \underbrace{\mathcal{C}^{\text{WEM}}_{\text{DSO}}}_{\text{Payments to WEM}}$

At d-LMP

$$\mathcal{P}_{\text{no-DSO}} = \underbrace{\mathcal{R}^{\text{L}}_{\text{no-DSO}}}_{\text{Revenue from Loads}} - \underbrace{\mathcal{C}^{\text{WEM}}_{\text{no-DSO}}}_{\text{Payments to WEM}}$$

At utility retail price

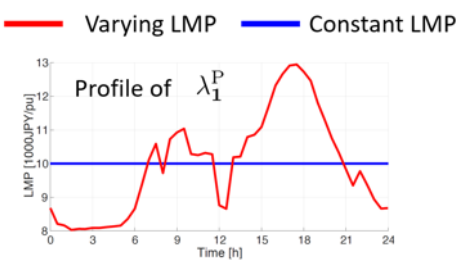

Increase in Revenue for DSO with Energy Market

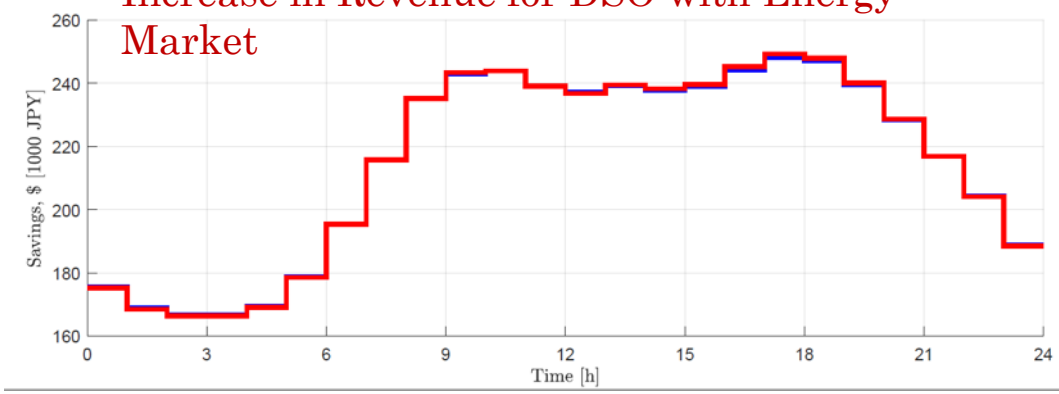

Source: Hayashi et al. "Versatile modeling platform for cooperative energy management systems in smart cities." *Proceedings of the IEEE* 106.4 (2018): 594-612.

Theme 8: Lab Testing and Validation

- Validate component model, network model and algorithms in offline
- Validate component model, network model and algorithms in real time
- Validate component model, network model and algorithms using lab-scale distribution system

TAMU: Hardware-in-the-loop simulation using OPAL-RT. A control model for battery charger and PV quasi-Z-source inverter is implemented in DSP board TMS320F28379D.

WSU: Developing models and simulations for test systems in multiple platforms.

Burns & McDonnell: Smart Grid Labs in KC & Houston

WSU/ NREL: Evaluation of different simulation frameworks and control strategy

- Software simulation
- Hardware-in-the-loop
- System-in-the-loop

WSU/HNEI: Enhancing existing testbed and development of HIL testbed at HNEI and WSU

TAMU

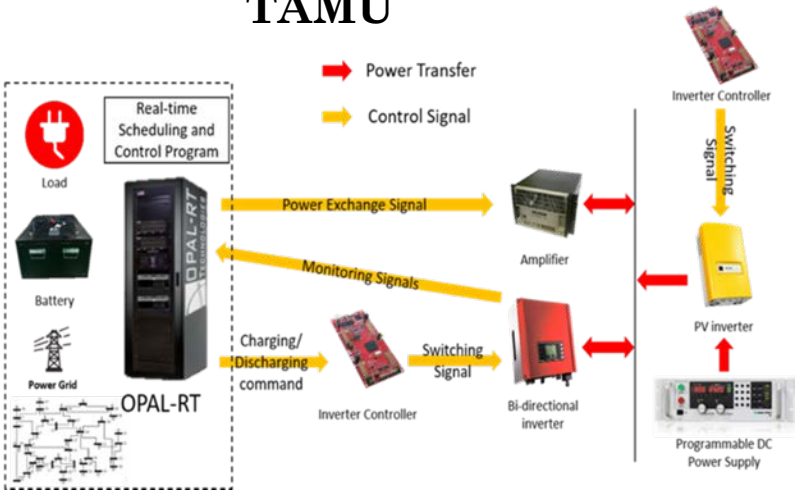

WSU

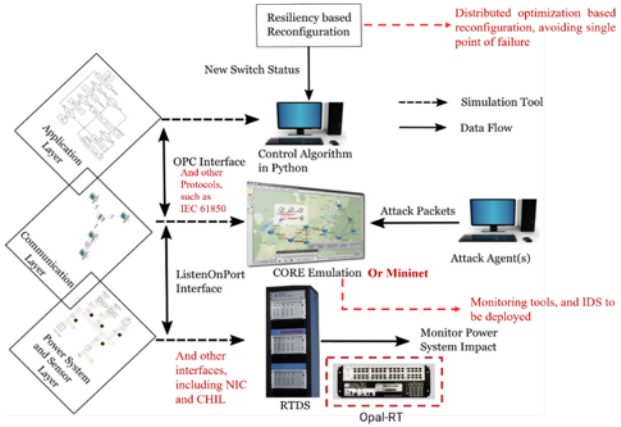

NREL

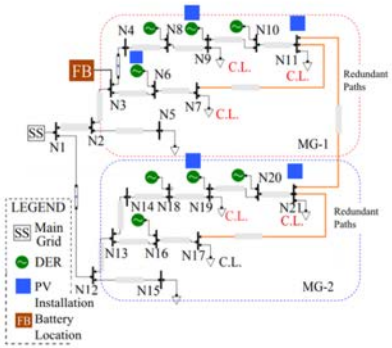

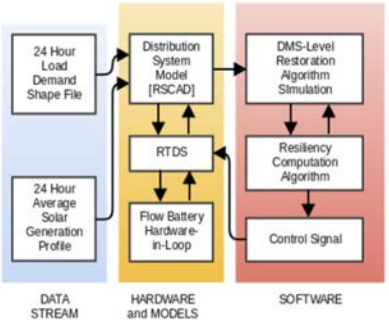

HNEI

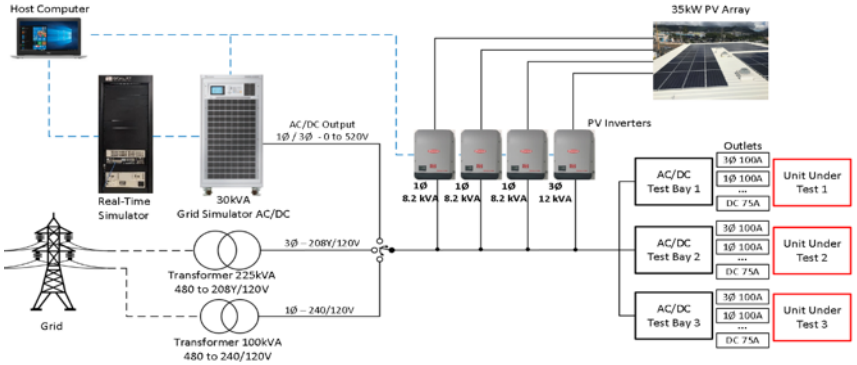

Theme 9: Field Demonstration

- *Field Implementation for Rural Feeders*
- *Field Implementation for Semi-Urban Feeders*
- Field Implementation for Urban Feeders

Pilot Projects

- US Semi-Urban Distribution Pilot 1 at WSU
- US Semi-Urban Distribution Pilot 2 at TAMU
- US Urban Distribution Pilot 1 at Spokane, WA
- US Urban Distribution Pilot 2 by GE/ PNY for ADMS-MEMS integration

Theme 10: Impact Analysis and Policy Recommendations

Impact Analysis

- WSU completed survey data collection in California and began cleaning and analyzing the data.
- WSU analyzing data on household adoption of battery storage.
- WSU is analyzing the data to identify normative, attitudinal, and sociodemographic correlations with interest in adoption of household solar, as well as factors associated with trust in utility companies and PV providers.

Classification includes

- Motivations for adoption (financial, environmental, and self-sufficiency),
- Obstacles to adoption (aesthetics, cost, residential instability, difficulty of the process),
- The rebound effect (self-reported increase in electricity use when it was "free"),
- Views of utility companies, and other more minor themes.

Progress on Policy Recommendations

- Recommending ideal structure of microgrids for rural, urban, and semi-urban areas in Indian context
- Suggesting regulatory changes required to promote and accelerate microgrid installations and their integrated operation with grid
- Suggesting suitable DSO model in the Indian as well as US context
- Technical due-diligence of energy storage at mini-grids and microgrids
- Policy for workforce development and training in evolving distribution system

Theme 11: Workforce Development and Educational

Key Activities:

- K-12 Outreach
  - In partnership ENGIE Hawai‘i, UH prepared and presented an interactive exhibit titled “Operation of the Electric Grid with Renewable Energy” for K–12 students at the UH SOEST Open House on October 25 and 26, 2019.
- Classroom and lab activities for college students
- Training the students for research
- Training for existing power engineering professionals
- Multiple panels and tutorials at IEEE PESGM 2020 and ICPS 2019

Publications List (from last two quarters)

1. M. Soleimani, M. Kezunovic, "Mitigating Transformer Loss of Life and Reducing the Hazard of Failure by the Smart EV Charging," IEEE Transactions on Industry Applications, page(s): 0, Print ISSN: 0093-9994, Online ISSN: 1939-9367, Digital Object Identifier: 10.1109/TIA.2020.2986990[Accepted, In press]
2. Niloy Patari, Anurag Srivastava, Guannan Qu, Na Li, "Distributed Optimal Voltage Control for Three Phase Unbalanced Distribution Systems with DERs", IEEE IAS Annual meeting 2020 Conference. [Submitted]
3. Sanjeev Pannala, Niloy Patari, Anurag Srivastava, Narayana Padhy, "Effective Control and Management Scheme for Isolated and Grid Connected DC Microgrid" IEEE Transactions on Industry Applications. [Submitted]
4. Rabab Haider, Stefanos Baros, Yasuaki Wasa, Jordan Romvary, Kenko Uchida, Anuradha M. Annaswamy "Towards a Retail Market for Distribution Grids", IEEE Transaction on Smart Grids [Revision submitted]
5. Rabab Haider, Anuradha Annaswamy "Optimal Coordination of Distributed Energy Resources in Smart Grids Enabled by Distributed Optimization" Conference poster Applied Energy Symposium: MIT A+B 2020 [Accepted]
6. Giulio Ferro, Michela Robba, David D'Achiardi, Rabab Haider, Anuradha M. Annaswamy "A distributed approach to Optimal Power Flow problem for unbalanced and mesh networks" IFAC World Conference 2020 [Accepted]
7. Michela Robba, Mansueto Rossi, Rabab Haider, Anuradha M. Annaswamy, "A current injection based method for unbalanced and meshed networks" IEEE Transaction on Power Systems [Submitted]
8. Jordan J Romvary, Giulio Ferro, Rabab Haider, Anuradha M. Annaswamy, "A Proximal Atomic Coordination Algorithm for Distributed Optimization" IEEE Transactions on Automatic Control [Revision Submitted]
9. Ramyar Saeedi, K. S. Sajan, Kevin Davies, Anurag Srivastava, and Assefaw H. Gebremedhin "A Customizable Machine Learning Framework for Behind-the-Meter Load/PV Disaggregation", IEEE Transactions on Industrial Informatics [Submitted]
10. Y. Zhang, A.K. Srivastava,, "Voltage Control Strategy for Energy Storage System in Distribution System with DERs" IET Renewable Energy, 2020 [submitted]
11. Rajarshi Dutta, Pratim Kundu, and Anurag K Srivastava, "Dynamic State and Parameter Estimation of Distributed Generators using PMU Data", IEEE Transactions on Industry Applications [Submitted]
12. Pramila S. Nirbhavane, Leslie Corson, Syed M. Hur Rizvi, and Anurag K. Srivastava, "TPCPF: A Three Phase Continuation Power Flow for Voltage Stability Analysis of the Distribution Systems with DERs", IEEE IAS Annual Meeting 2020 [Submitted]

Publications List (from last two quarters)

13. Mohammad Hossein Namaki, Xin Zhang, Sukhjinder Singh, Arman Ahmed, Armina Foroutan, Yinghui Wu, Anurag K. Srivastava, Anton Kocheturov, "Kronos: Lightweight Knowledge-based Event Analysis in Cyber-Physical Data Streams", ICDE, April 2020 [Accepted].

14. M. Soleimani, M. Kezunovic "Transformer Loss of Life Mitigation by Coordinating Energy Storage, EV charging, and PV Generation", XXI Power Systems Computation Conference (PSCC 2020), Porto, Portugal, June-July, 2020 [Submitted].

15. A.Y. Saber, T. Khandelwal, and A.K. Srivastava, "Fast Feeder PV Hosting Capacity using Swarm Based Intelligent Distribution Node Selection," IEEE Power Engineering Society 2019 General Meeting, Aug 4-8, 2019, Atlanta, GA, USA [accepted].

16. Sanjeev Pannala, N P Padhy, A.K. Srivastava," Effective Power Management Scheme for Isolated DC Microgrid" IEEE International conference on "Power Electronics, Smart Grid and Renewable Energy (PESGRE 2020), Jan 2-4, 2020, Cochin, Kerala, India[Published]

17. A.Y. Saber, T. Khandelwal, and A.K. Srivastava, "Hyper Deep Learning based Load Forecasting," IEEE PES GM 2020, Montreal, Canada, August 2020 [submitted].

18. M. Khoshjahan, M. Soleimani and M. Kezunovic, "Optimal participation of PEV charging stations integrated with smart buildings in the wholesale energy and reserve markets," IEEE ISGT 2020, Washington, DC.

Thanks for the opportunity to share about UI-ASSIST

Dr. Noel N. Schulz, UI-ASSIST US Admin Lead

Dr. Anurag Srivastava, UI-ASSIST US Technical Lead

The School of EECS

Voiland College of Engineering and Architecture

Washington State University

Noel.Schulz@wsu.edu, Anurag.k.Srivastava@wsu.edu

Contact Nos: 509-335-0980, 509-335-2348