2020 Microgrid R&D Program
Peer Review Meeting

Resilient Electric Distribution Grid R&D

Kevin Schneider
Pacific Northwest National Laboratory

6/9/2020

Resilient Electric Distribution Grid R&D

Objectives & Outcomes

To increase the resiliency of the nation's electric infrastructure and critical end-use loads using microgrids. Increased resiliency can be achieved by coordinating the operation of centralized and distributed control systems during normal and extended outages. This project is developing the simulation and analysis capabilities necessary to develop and evaluate the operation of microgrids for resiliency applications while addressing the issue of high deployment costs.

Technical Scope

To use unbalanced distribution-level dynamic simulations and communications infrastructure simulations to support the development of cost-effective controls for resiliency-based microgrids.

- Inter-microgrid dynamics due to switching operations and the associated in-rush.
- Dynamics due to mixed inverter controls.
- Distributed controls for resiliency.
- Co-simulation to evaluate control architectures.

Funding Summary ($K)

	FY19	FY20, authorized	FY21, requested
PNNL (total project)	1,180	1,280	730
(subcontract sent to VT)	265	515	100
(subcontract sent to UCI)	285	0	TBD

Significance and Impact

- **Current state of the art**: The majority of critical loads are served by one or more local diesel generation units used for backup operations. Because of space and cost considerations, the on-site fuel can typically support no more than 48-96 hours of operation. Additionally, deployments are expensive, which limits their use.
- **Problem**: The occurrence of extreme events (e.g., hurricanes, wildfires) that interrupt critical end-use loads is increasing. During an extended outage, service to critical end-use loads can be interrupted when fuel supply chains are disrupted. Additionally, for facilities with only a single backup generator, there may be no source of redundant power if the unit fails to start, or fails while in operation.
- **Need: "An increase in operational flexibility."** The stated problems can be technically addressed with the deployment of existing microgrid technologies. While there are technically feasible solutions, they are expensive due to their reliance on a large number of deployed assets and limited tools for analysis. What is needed is the ability to simulate operational scenarios on full-size microgrids to improve designs, and the development of flexible controls to increase asset utilization.
- **Improvements/advancements**: Two main areas:
  - Development of tools and capabilities to examine the operations of full-size microgrids.
  - Development of control strategies to improve the resiliency and efficiency of microgrids, while mitigating the high cost of their deployments.

Technical Approach

- **Inverter modeling and control for full-size system models**
  - Innovation: Past studies have used electromagnetic solvers for small systems or static solvers for large systems. This work is continuing to develop open-source electromechanical representations and models for large systems, allowing for many operational questions to be answered.
  - Full-size systems with unbalanced representation (10,000+ nodes)
  - Full generator and inverter controls (speed control, voltage regulators, grid-following and grid-forming).

- **Advanced distributed controls for flexibility and resiliency**
  - Innovation: Develop advanced controls that leverage existing assets to provide additional operational capabilities, increasing resiliency and controlling cost.
  - Increase the utility of existing assets to increase resiliency without requiring significant additional capital deployments/costs.
  - Migrate from centralized to distributed control to increase resiliency.

- **Co-simulation capability for resiliency operations**
  - Innovation: Developing the ability to co-simulate microgrid operations in the sub-second time-frame to evaluate their impact on power system operations.
  - Extend the co-simulation capabilities of HELICS to sub-second time frame.
  - Evaluate the impact of communications infrastructure on new flexible operating concepts.

FY 2020 Progress and Results

(Inverter Modeling 1)

- Simulation capabilities have been developed for full-size systems.
  - Grid-forming controls
  - Grid-following controls
  - Droop controls (CERTS based)
  - Non-ideal DC voltage in the inverter
- Work has also been conducted to resolve inconsistencies in document models.
- All simulations conducted at electromechanical time-frames (1 milli-second) using GridLAB-D.
- Simulation validated against electromagnetic time-frames (1 micro-second) using PSCAD, and where possible, CERTS laboratory tests.
- Grid-forming inverters have the potential to significantly stabilize low inertia systems when properly implemented.

Grid-Following Control with Frequency-Watt

measure *frequency*, control *power*

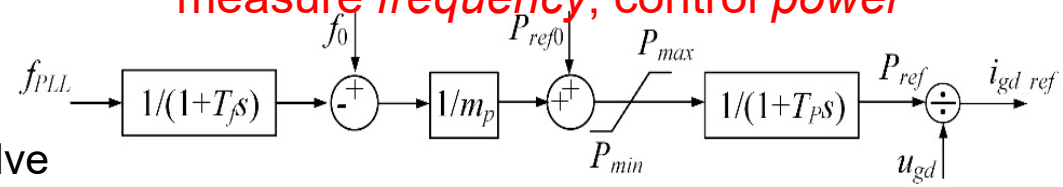

Grid-Forming Control with P-*f* Droop

measure *power*, control *frequency*

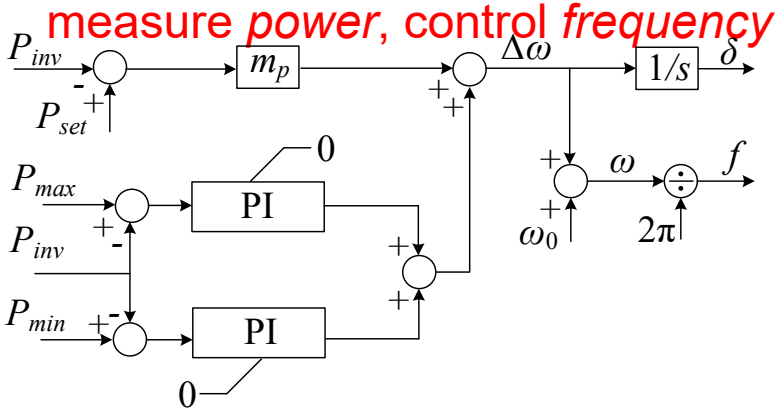

FY 2020 Progress and Results

(Inverter Modeling 2)

- With validated inverter models, simulations can now be conducted on larger system models.
  - IEEE 123 Node Test System (being used now)
  - IEEE 8500/9500 Test System (next step)

- Simulations have shown that when used as a support for secondary frequency control, distributed devices can improve the response to frequency transients and maintain resilient operation of the microgrid.

- The goal is to be able to examine large scale systems, with dozens or hundreds of inverters, using a range of controls to examine operations. For example:
  - Mixes of grid-forming and grid-following with frequency-watt control
  - Dynamic stability under mixes of controls
  - Networked microgrid switching operations under mixed controls

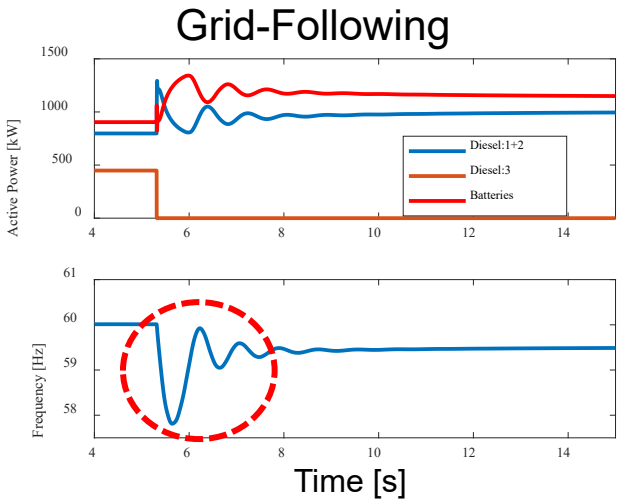

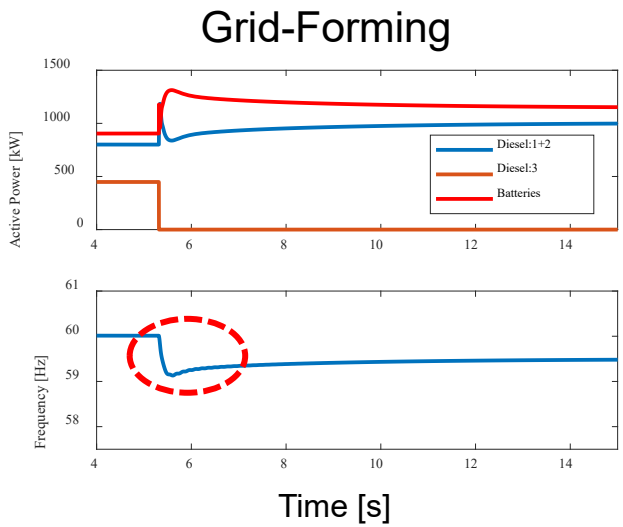

FY 2020 Progress and Results

(Advanced Controls 1)

- In addition to inverters, work has been done on the modeling and control of distributed voltage control devices. In collaboration with Pacific Volt.
- Simulations of IEEE 123-node system – distributed voltage control devices during generator drop event in islanded mode.

Without Frequency Control of low voltage regulator (LVR)

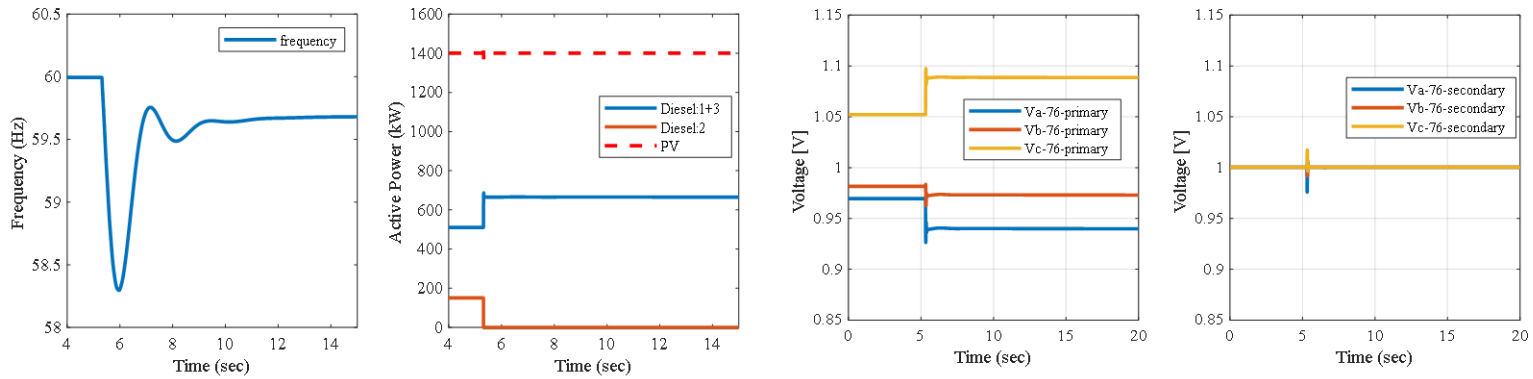

With Frequency Control of LVR

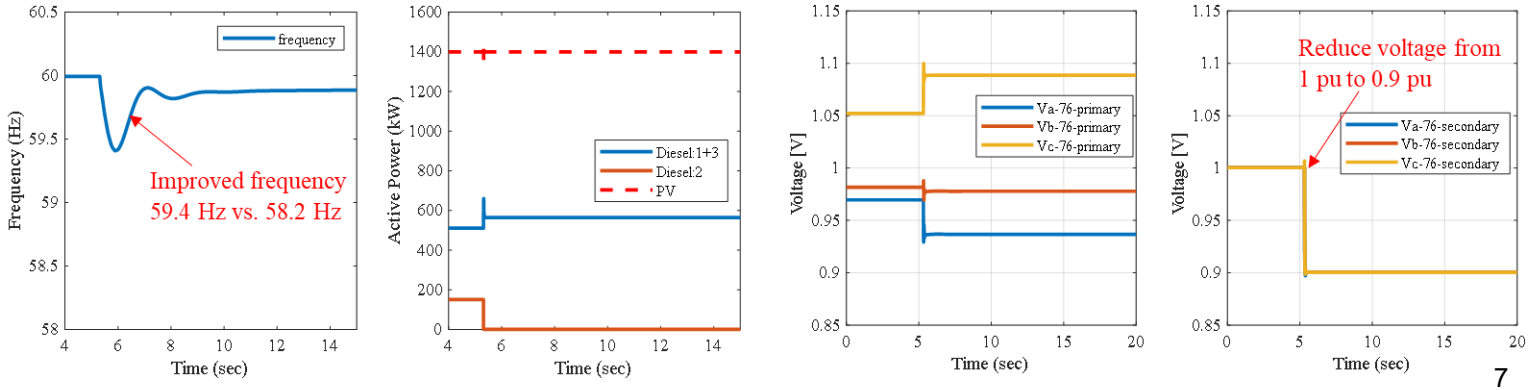

FY 2020 Progress and Results

(Advanced Controls 2)

- Previous work used either distributed PID controllers or a centralized Reinforcement Learning (RL) controller to determine the set points of distributed devices for improved frequency responses.

- The work in FY20 has been focusing on Distributed Reinforcement Learning-based controllers to avoid the manual tuning of distributed PID controllers and the need for centralized-communication reliance and the large computation requirement of the centralized RL.

- The goal is to automate the determination of set-points of distributed devices to prevent large frequency deviations for a wide range of contingencies.

- FY20 is investigating how to use local observers (e.g., Kalman filter or Neural Network) based on local measurements to learn a parameter characterizing contingencies (e.g., post-contingency operating point) and to integrate this knowledge into a parameterized RL control policy that can adapt to contingencies.

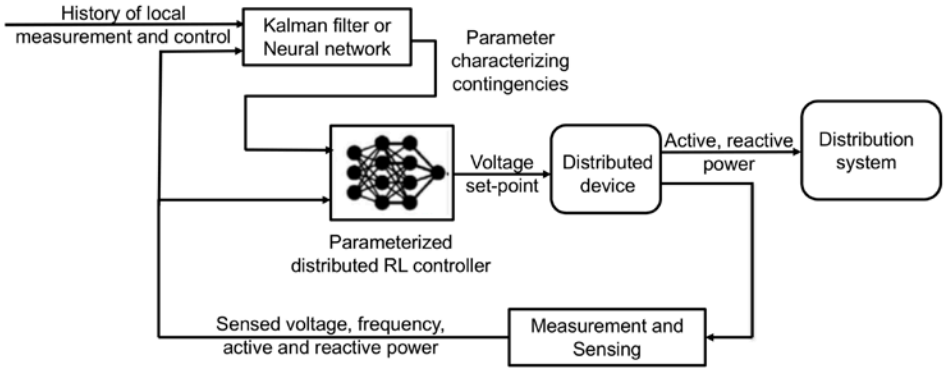

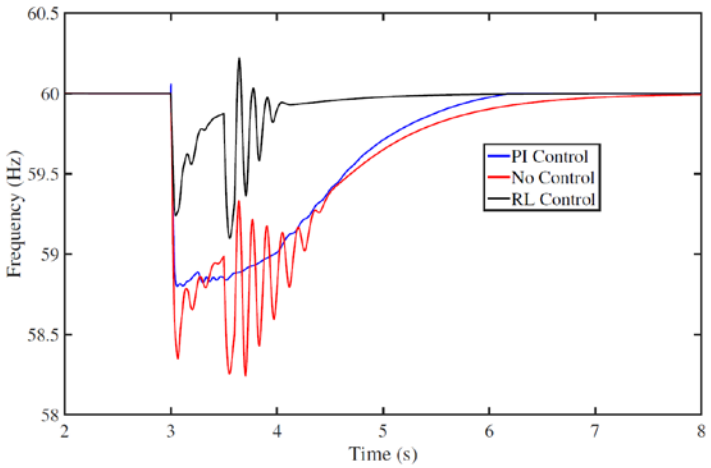

FY 2020 Progress and Results

(Co-Simulation 1)

- Expanded power systems model
  - IEEE 123-node as multiple microgrids
  - Photovoltaic-based inverters and diesel generators
  - Grid Friendly Appliance™ controllers on all loads
- Expanded communication model
  - Multi-traffic – AMI and SCADA
  - Multi-protocol – IEEE 820.15.4, IEEE 802.11, TCP-IP, UDP
  - Multi-channel – Wired (Optical) and Wireless
- Utilized in Machine Learning task
  - Feed measurements into machine learning algorithm
  - Examine AVR settings for conservation voltage reduction as a resilience action

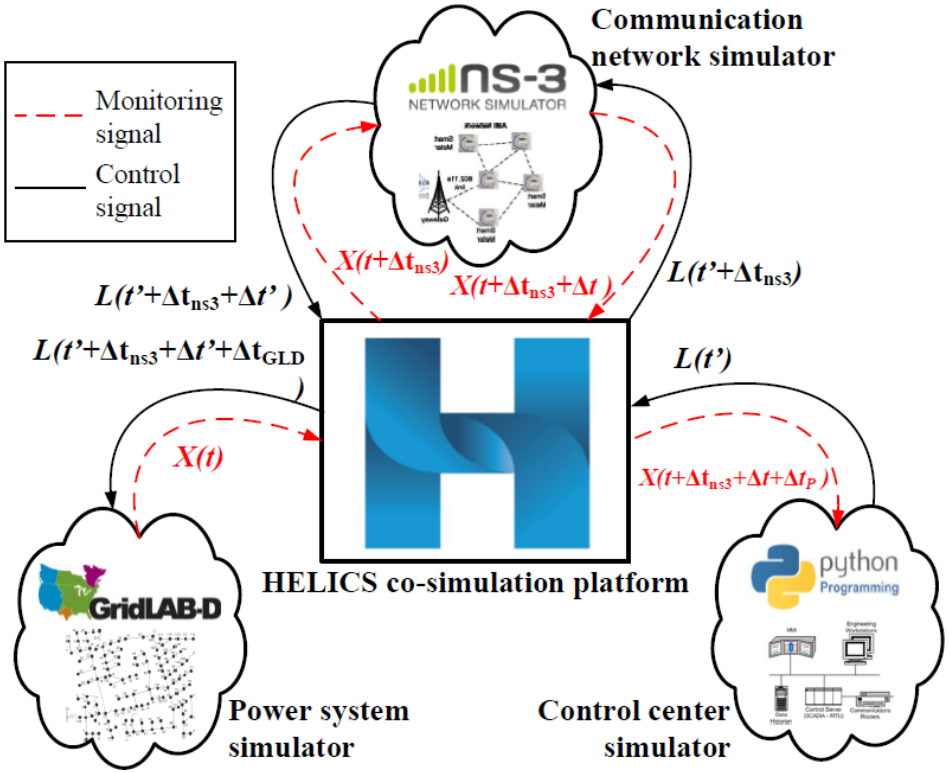

FY 2020 Progress and Results

(Co-Simulation 2)

- A set of use-cases have been used to highlight the utility of co-simulation utility.
- Base system simulation
  - IEEE 123-node system
  - Islanded operation – three islands
  - 320 kW of PV generation tripped due to failure
  - Microgrid controller redispatch battery to offset the change in generation
- Three use-cases
  - Ideal communication
  - Congestion modeled
  - Congestion with GFA-enabled devices

Ideal Communications

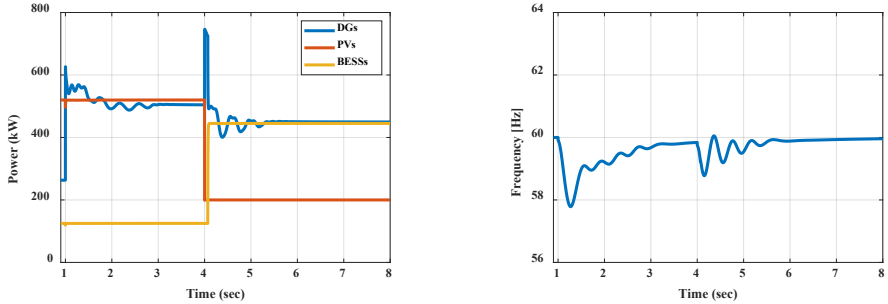

Communications Congestion Modeled

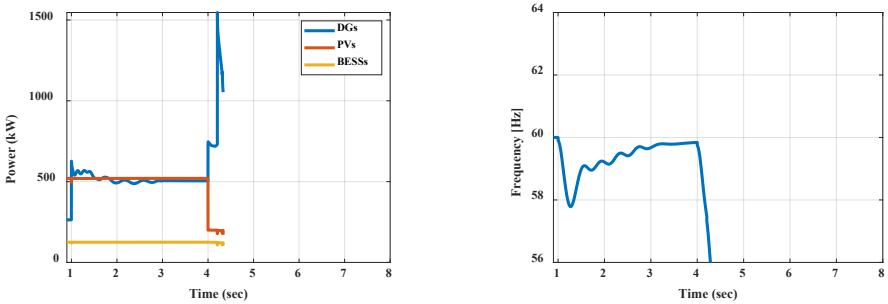

Congestion Modeled w/ GFA Devices

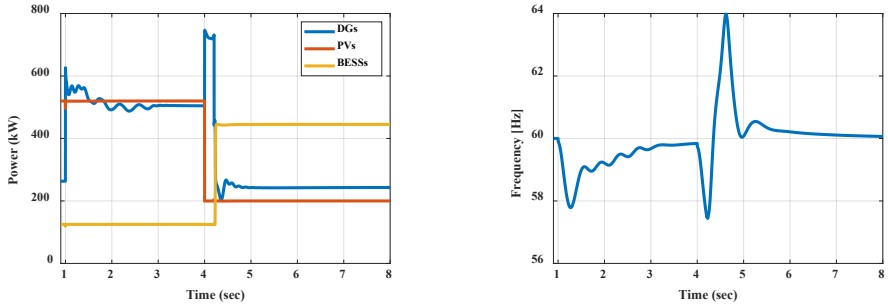

FY 2020 Key Tasks and Milestones

FY 2020 Milestones							
Original Date	HQ POC	Field POC	Importance	M&O Critical	Milestone Type	Milestone Description	Actual Date Completed
12/31/2019	D. Ton	K Schneider	3	No	Intermediate Milestone	PNNL - Conduct literature review on commercially available grid-forming inverter technologies	12/31/2019
3/30/2020	D. Ton	K Schneider	3	No	Intermediate Milestone	PNNL – Develop basis for prototypical communications systems typically used by utilities	3/30/2020
4/30/2020	D. Ton	K Schneider	3	No	Go/No-Go	PNNL – Refine distributed voltage control models to support resilient microgrids operations	4/30/2020
6/30/2020	D. Ton	K Schneider	3	No	Final Deliverable	PNNL - Submit a peer reviewed publication on using grid-forming inverters for resilient microgrids	3/19/2019
7/30/2020	D. Ton	K Schneider	3	No	Intermediate Milestone	PNNL - Create multi-point mixed channel/mode communications system model. This will include fiber and wireless sections.	
8/30/2020	D. Ton	K Schneider	3	No	Intermediate Milestone	PNNL – Develop advanced controls to coordinate grid-form and grid-following inverters in parallel operation	
9/30/2020	D. Ton	K Schneider	3	No	Final Deliverable	PNNL - Submit a peer reviewed publication on co-simulation	

Schedule for FY 2020 and FY 2021

- Planned for FY20 (per approved FY 20 AOP)
  - Inverter modeling and control for full-size system models:
    1) Complete modeling of “soft DC” bus models
    2) Complete initial control implementation for mixed inverter control types
  - Advanced control for flexibility and resiliency:
    1) Complete modeling of secondary voltage regulation devices for stability
    2) Complete first cut of machine learning based controls for distributed assets
  - Co-simulation capability for resiliency operations:
    1) Complete initial prototypical communications systems for co-simulation
    2) Complete initial use-case models of how co-simulation support control design

- Planned for FY 21 (per AOP to be submitted week of June 15th)
  - Shift operational use-case to Resilient Ports
    1) Includes networked microgrid switching operations
    2) Large numbers of mixed inverter controls
    3) Machine learning based distributed controls for stability
  - Inverter controls
    1) Coordinate with other DOE efforts to develop improved inverter control models
    2) Develop framework for how to coordinate mixed controls for common microgrid operations
  - Machine learning for distributed controls
    1) Continue industry interaction to implement distributed controls
    2) Expand machine learning concepts and examine deployment on commercial hardware

Technology Transfer Activities
(Collaborations)

- **Seattle City Light**: Working with SCL on their waterfront electrification efforts. In FY21, Resilient Ports will be the use-case and SCL is providing system planning models and discussion on use-cases for potential microgrid and port operations.

- **Duke Energy**: Leveraging the Duke-RDS project and the use-case of microgrid switching. The adaptive structure of this system is an ideal use-case for the operational issues that must be addressed for effective microgrid operations.

- **Electric Power Board of Chattanooga:** Leveraging the Citadels project and the use-cases associated with networked microgrid operations, including switching and in-rush.

- **Pacific Volt**: Working with Pacific Volt on how the distributed frequency stabilization concepts could be incorporated into their commercial project.

- **University of Wisconsin**: Working with Professor Robert Lasseter and leveraging his extensive knowledge of rotating machines and inverters. Will begin a subcontract with him for FY21 efforts.

Technology Transfer Activities
(Publications)

Completed

- W. Du, Z. Chen, K. P. Schneider, R. H. Lasseter, S. Pushpak, F. K. Tuffner, and S. Kundu, “A Comparative Study of Two Widely Used Grid-Forming Droop Controls on Microgrid Small Signal Stability,” Special Issue on Modeling, vol. 8 no. 2, pp. 963-975, June 2020.
- X. Wu, Y. Xu, X. Wu, J. He, J. Guerrero, C. C. Liu, K. P. Schneider, and D. Ton, “A Two-Layer Distributed Control Method for Islanded Networked Microgrid Systems,” IEEE Trans. on Smart Grid, vol. 11, no. 2, pp. 942-957, March 2020.
- C. Canĩzares, J. Riley, R. Palma-Behnke, et. al., “Microgrid Stability Definitions, Analysis, and Examples,” IEEE Trans. On Power Systems, vol. 35, no. 1, pp. 13-29, Jan. 2020.
- Y. Wang, Y. Xu, J. He, C. C. Liu, K. P. Schneider, M. Hong, and D. Ton, “Coordinating Multiple Sources for Service Restoration to Enhance Resilience of Distribution System,” IEEE Trans. on Smart Grid, vol. 10, no. 5, pp. 5781-5793, Jan. 2019.
- F. K. Tuffner, K. P. Schneider, J. Hansen, and M. A. Elizondo “Modeling Load Dynamics to Support Resiliency based Operations in Low Inertia Microgrids,” IEEE Trans. on Smart Grid, vol. 10, no. 3, pp. 2726-2737, May 2018.
- K. P. Schneider, F. K. Tuffner, M. Elizondo, J. Hansen, J. Fuller, and D. Chassin, “Adaptive Dynamic Simulations for Distribution Systems using Multi-State Load Models,” IEEE Trans. on Smart Grid, vol. 10, no. 2, pp. 2257-2266, Jan. 2019.
- K. P. Schneider, N. Radhakrishnan, Y. Tang, F. K. Tuffner, C. C. Liu, J. Xie, and D. Ton, “Improving Primary Frequency Response to Support Networked Microgrid Operations,” IEEE Trans. on Power Systems, vol. 34, no. 1, pp. 659-667, Jan. 2019.

In Pre-Publishing

- N. Radhakrishna, F. K. Tuffner, K. P. Schneider, W. Du, “Learning-Based Load Control to Support Resilient Networked Microgrid Operations,” Accepted IET Smart Grid.
- B. Bhattarai, L. Marinovici, Md. Touhiduzzaman, F. T. Tuffner, K. P. Schneider, J. Xie, P. Thekkumparambath Mana, W. Du, and A. Fisher, “Studying Impacts of Communication System Performance on Dynamic Stability of Networked Microgrid,” Accepted IET Smart Grid.
- P. Thekkumparambath Mana, K. P. Schneider, W. Du, M. Mukherjee, T. Hardy, and F. K. Tuffner, “Study of Microgrid Resiliency Through Co-simulation of Power System Dynamics and Communication Systems,” Accepted IEEE Transactions on Industrial Informatics.
- K. P Schneider, F. K. Tuffner, Y. Yang, N. Radhakrishnan, P. Thekkumparambath, J. Kumar, and S. S. Venkata, “A Slider-based Multi-objective Control for Resilient Microgrids,” Accepted, IET Generation, Transmission & Distribution.
- Z. Wang, Y. Chen, C. C. Liu, Y. Xu, K. Mo, K. P Schneider, F. K. Tuffner, and D. Ton, “Calibrating Synchronous-Generator-Interfaced DG Models in Microgrids using Multiple Event Data” International Journal of Electrical Power & Energy Systems,” vol. 120, Sept. 2020.

Open Source: Most of the developed code, with the exception of specific system models, is publically available on GitHub. This enables industry partners, and Universities, to access and use all of the developed capabilities.

Contact Information

Kevin Schneider, Ph.D., P.E., FIEEE
Chief Engineer & Mgr. Distribution and Demand Response Sector
Pacific Northwest National Laboratory
Research Professor, Washington State University
(206) 528-3351
kevin.schneider@pnnl.gov

Project Team
Frank Tuffner
Wei Du
Bishnu Bhattarai
Long Vu
Jing Xie
Ankit Singhal
Gowtham Kandaperumal (WSU-Distinguished Graduate Research Program Fellow)
Marcelo Elizondo

Nikitha Radhakrishnan (Currently on assignment at DOE-BTO)
Priya Thekkumparambath Mana (Currently finishing PhD at Georgia Tech)