2020 Microgrid R&D Program Peer Review Meeting

Self-Healing Microgrids

Breyah Matthews, Jennifer Lee,
Scott Samuelsen
Advanced Power and Energy Program, UCI

June 11, 2020

Self-Healing Microgrids

Objectives & Outcomes

- Enhance the UCI Microgrid (UCIMG) model developed under the DOE GMC initiative with both self-healing and blackstart attributes,
- Develop and demonstrate the logic required for the GMC to support self-healing circuits and system restoration.
- Acquire and archive operating and event field data from the UCIMG.

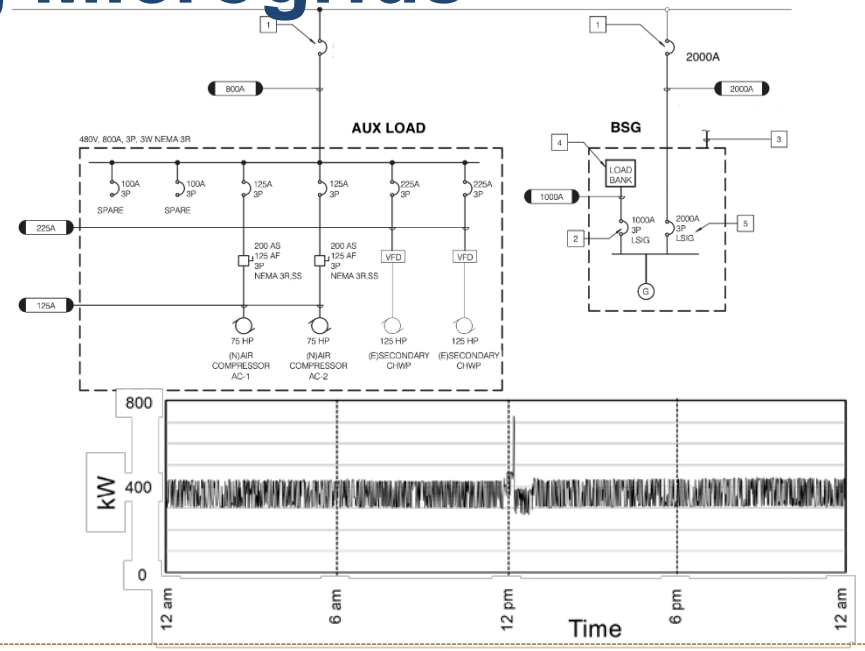

Technical Scope

- An EMT model of the UCIMG is developed including redundant lines and circuits and smart switches . A fault is simulated on an islanded UCIMG and repeated for various locations and initial conditions. Operation of the controller in minimizing loss of load is assessed
- Model of the a blackstart generator is added to UCIMG by determining auxillary loads required for start-up, GT controls are updated to include start-up, and blackstart logic is added to the microgrid controller. Results will be validated with field data

Funding Summary ($K)

FY19 & prior, authorized	FY20, authorized	FY21, requested
$220,000	$220,000	$220,000

Project Overview

- **Goals:**
  1. **Enhance and test the Generic Microgrid Controller (GMC) with protection and resiliency attributes**
  2. **Acquire and archive operating microgrid field data**

- **Leverage:**
  - **The DOE GMC Initiative**
    - IEEE 2030.7 Standard
  - **The UCI Microgrid**
    - A classic microgrid configuration
    - 20 MW class
    - Upgraded with state-of-the-art instrumentation and control

© 2020 UC Irvine Advanced Power and Energy Program

UCI Microgrid

© 2020 UC Irvine Advanced Power and Energy Program

UCI Microgrid

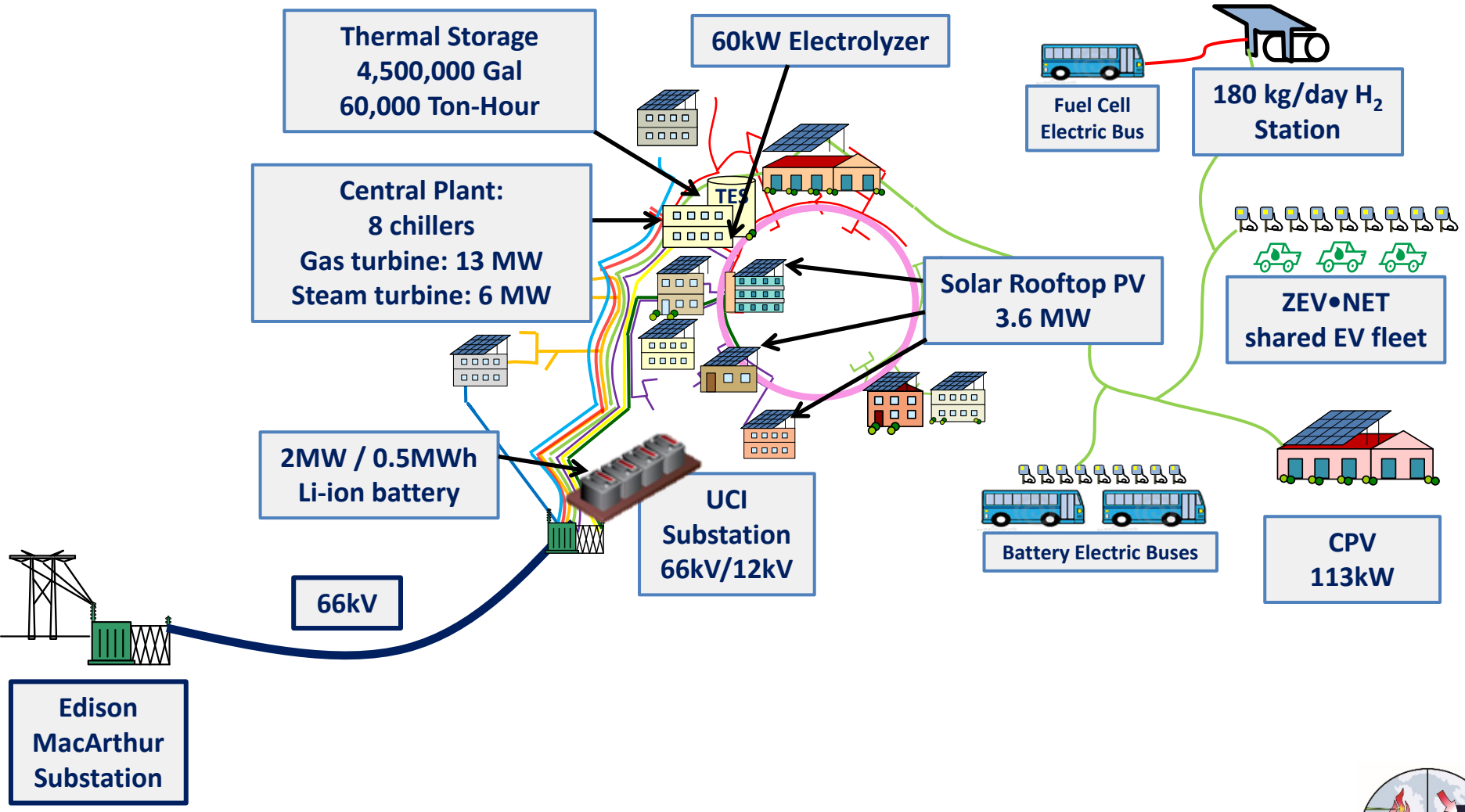

© 2020 UC Irvine Advanced Power and Energy Program

UCI Microgrid

- **Deployment of Blackstart Generator**
  - **Cummins 1.25 MW**
  - **Commissioning Date: Q4 2020**
- **Deployment of IEEE 2030.7 Controller**
  - **Schweitzer Engineering Laboratories (SEL) PowerMax**
  - **Commissioning Date: Q4 2021**

© 2020 UC Irvine Advanced Power and Energy Program

Outline

- **Goals**
- **Goal 1: Enhance GMC with Reliability and Resiliency**
  - **Task 2: Self-Healing Capability**
    - Subtask 2.1: Enhance UCIMG model
    - Subtask 2.2: Enhance GMC logic
    - Subtask 2.3: Test plan and simulation
  - **Task 3: Blackstart Capability**
    - Subtask 3.1: Enhance the central plant model
    - Subtask 3.2: Add blackstart generator to the UCIMG model
    - Subtask 3.3: Add blackstart logic to the GMC
- **Goal 2: Acquire, Archive Microgrid Field Data**
- **Next Steps**
- **Technology Transfer**

© 2020 UC Irvine Advanced Power and Energy Program

Schedule

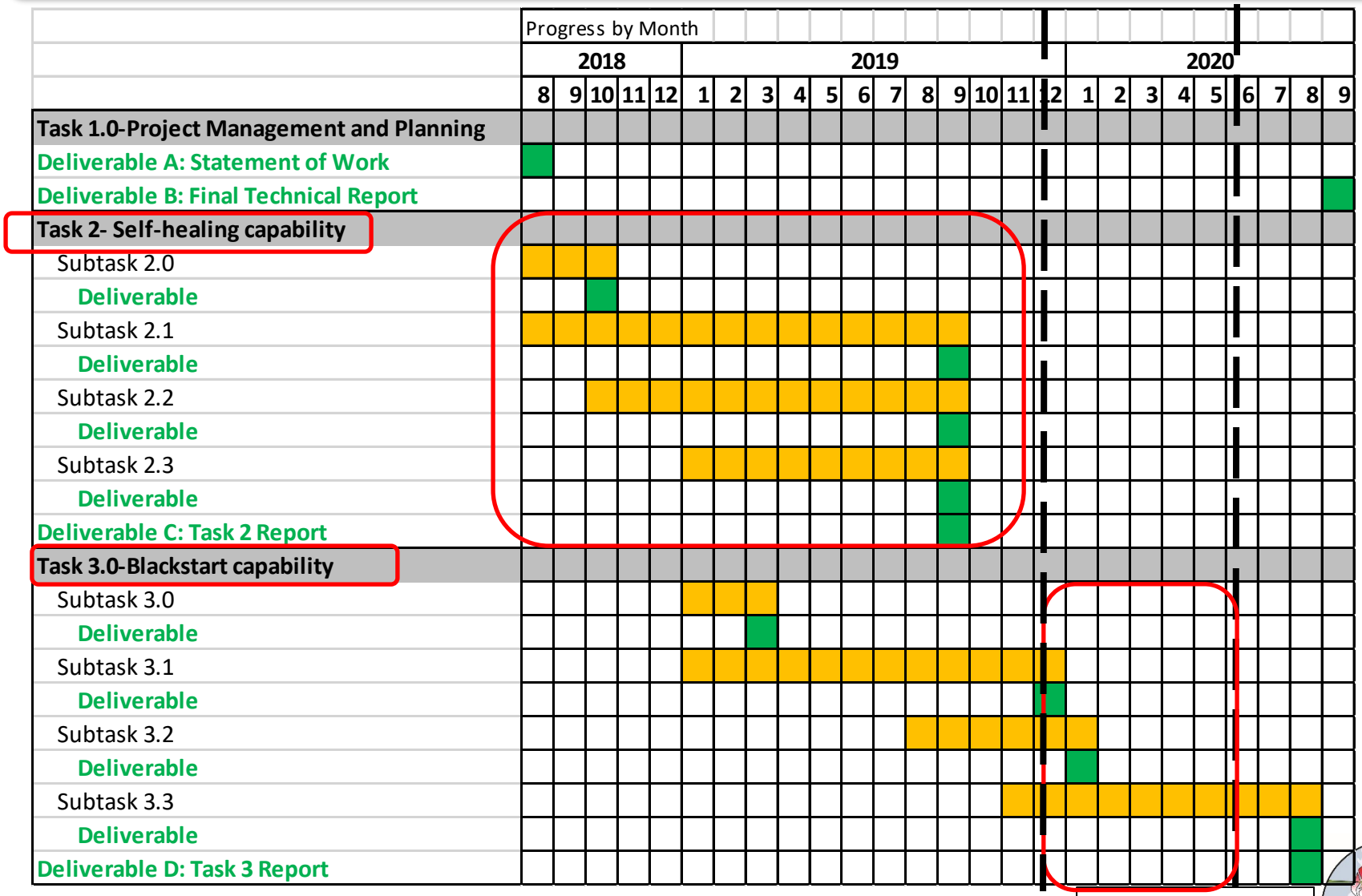

© 2020 UC Irvine Advanced Power and Energy Program

Outline

- **Goals**
- **Goal 1: Enhance GMC with Reliability and Resiliency**
  - **Task 2: Self-Healing Capability**
  - **Task 3: Blackstart Capability**
    - Subtask 3.1: Enhance the central plant model
    - Subtask 3.2: Add blackstart generator to the UCIMG model
    - Subtask 3.3: Add blackstart logic to the GMC
- **Goal 2: Acquire, Archive Microgrid Field Data**
- **Next Steps**
- **Technology Transfer**

© 2020 UC Irvine Advanced Power and Energy Program

Subtask 3.1: Central Plant Model

- **UCIMG Central Plant**

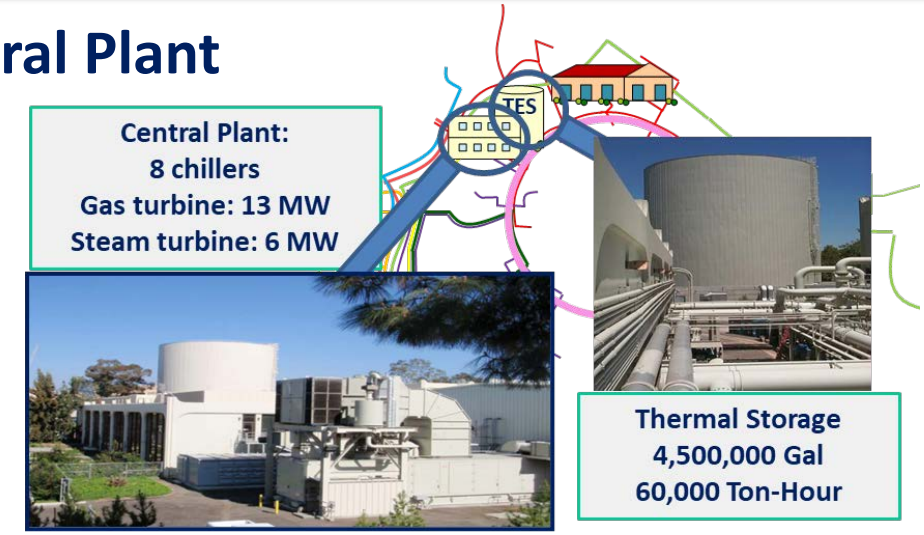

  - **Generate electricity, chilled water, high-temperature water to serve campus community demand of 53,000**
  - **Provide virtually 100% of community electric load**

- **Campus Electric Load**
  - **13.4 MW Average**
  - **18.6 MW Peak Annual Demand**
  - **50% Lower than design due to Deep Energy Efficiency**

© 2020 UC Irvine Advanced Power and Energy Program

Subtask 3.2: Add Blackstart to UCIMG Model

- **Blackstart sequence initiated when:**
  - **The grid is experiencing an outage, and**
  - **Seamless islanding is not successful, tripping the gas turbine**

- **Two restoration scenarios considered**
  - **Deployment and use of dedicated Blackstart Generator (BSG)**
  - **Use of existing 1MW/0.5 MWh battery energy storage**

© 2020 UC Irvine Advanced Power and Energy Program

Subtask 3.2: Add Blackstart to UCIMG Model

- **Blackstart capability requires:**
  - **Addition of BSG controls to microgrid controller**
  - **Serve auxiliary loads capable of operation without the utility grid**
  - **Provide ample carrying capacity**
  - **Parallel utility interconnection and switchgear controls**

- **Examples of auxiliary loads:**

Load Name	
Power Panel	CTG Pre/Post Lube Oil Pump
CTG Generator Enclosure Vent Fan	Plant Main Battery Charger
CTG AC Direct Start Motor	Urea System Heater Control Panel
CTG Turbine Enclosure Vent Fan	Urea System Circ & Metering Control Panel
Generator Space Heater	Cogen Building Exhaust Fan
Cogen Cooling Tower Fan	Circulating Water Pump
Fuel Gas Compressor	

© 2020 UC Irvine Advanced Power and Energy Program

Subtask 3.2: Add Blackstart to UCIMG Model

- **Data currently available:**
  - **Gas turbine and steam turbine data**
  - **Auxiliary data (i.e. frequency, voltage, real and reactive power)**

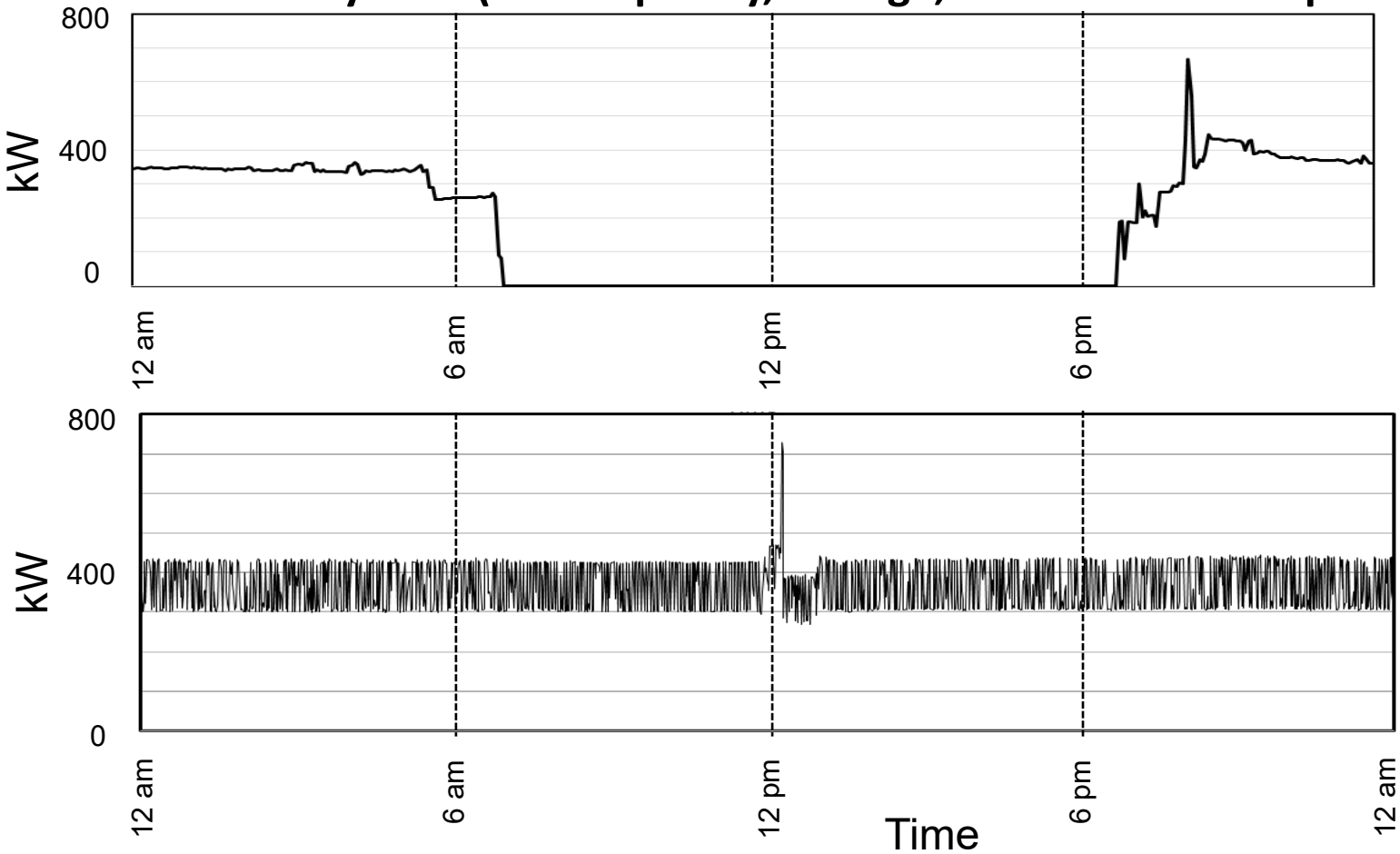

© 2020 UC Irvine Advanced Power and Energy Program

Subtask 3.2: Add Blackstart to UCIMG Model

- **BSG calculated size: 1.25 MW**
- **Future additional data provided by installation of BSG:**
  - **BSG real and reactive power during black-start**
  - **Sequence of auxiliary load pick up (real and reactive power)**
  - **CTG loading during black-start**
  - **Any transient data**

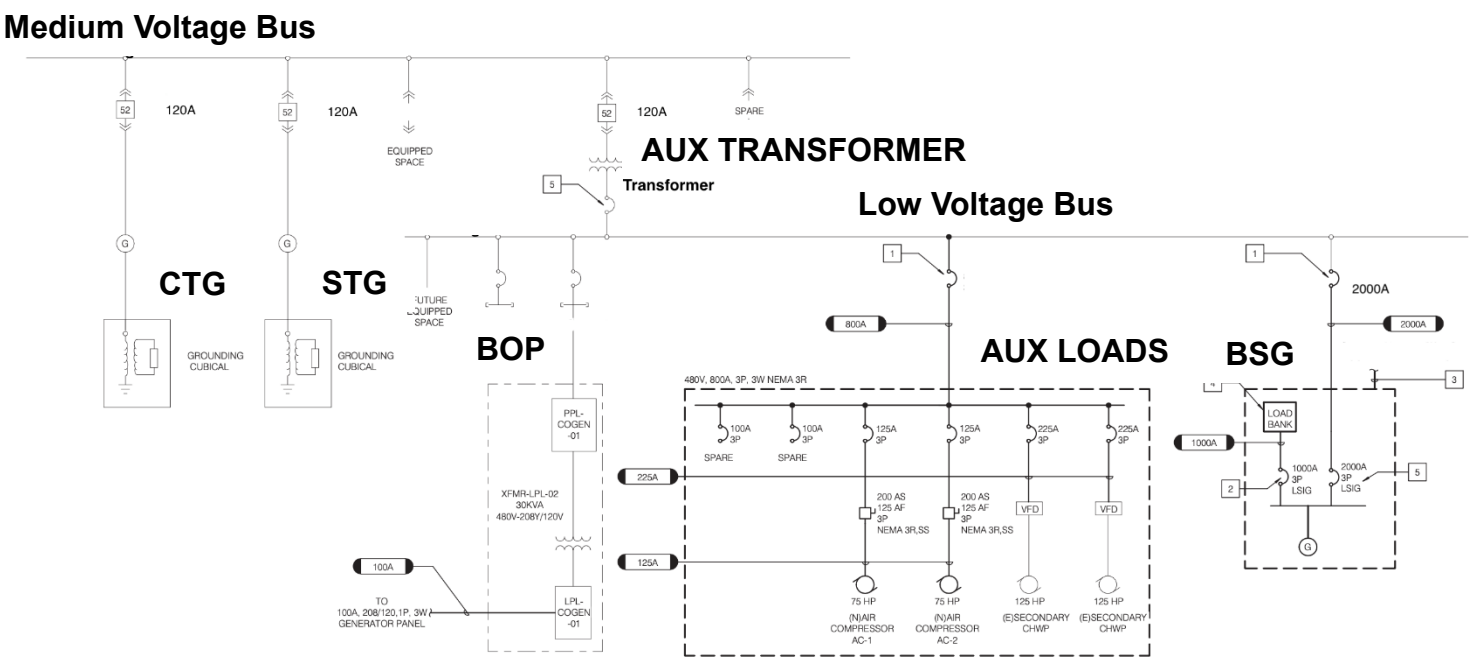

Subtask 3.3: Add Blackstart Logic to GMC

1. Verify medium voltage main bus and low main bus voltage are de-energized
2. Start Blackstart Generator
3. Close circuit breaker in the low voltage main bus
4. Close circuit breaker that interfaces the low voltage main bus to medium voltage bus
5. Close circuit breaker that interfaces medium voltage main bus to auxiliary transformer
6. Begin normal start up procedure for gas turbine and steam turbine and synchronization to medium voltage bus
7. Begin shutdown procedure for BSG and open low voltage main bus

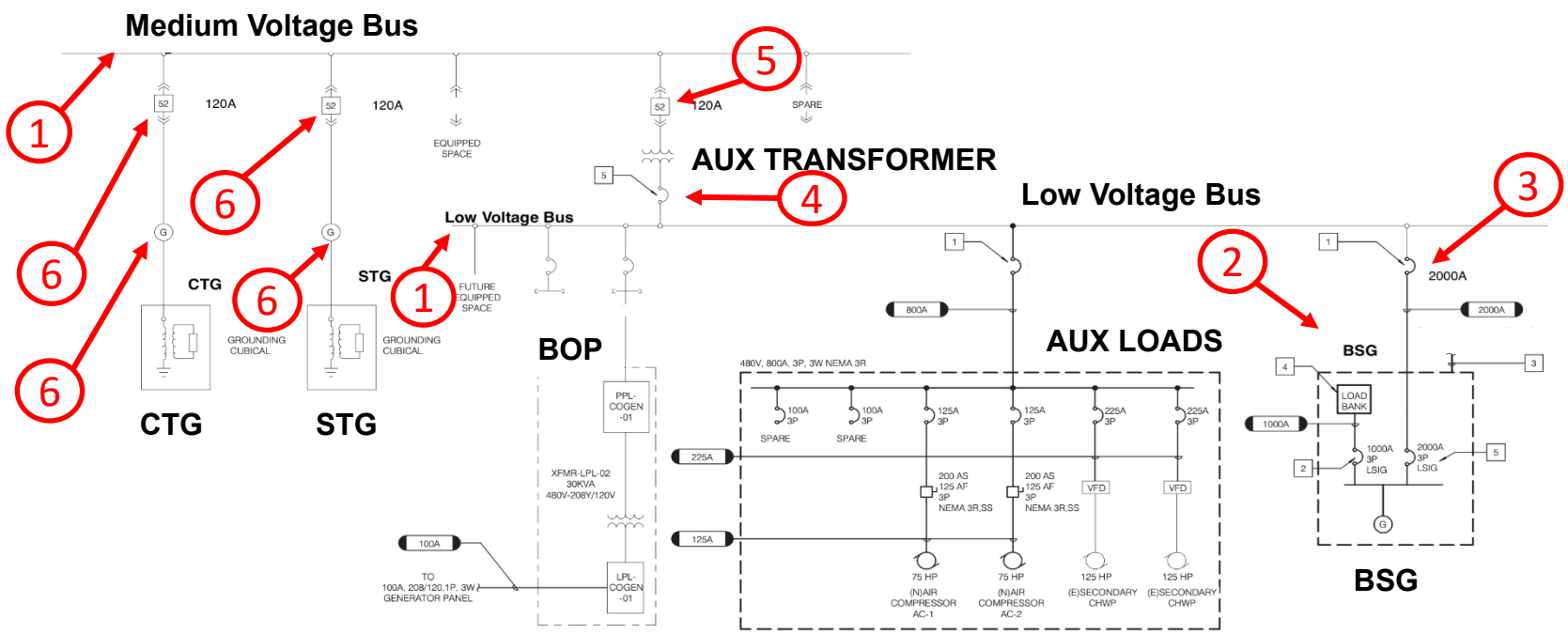

- **Next, load restoration sequence is initiated**

© 2020 UC Irvine Advanced Power and Energy Program

Outline

- Goals
- Goal 1: Enhance GMC with Reliability and Resiliency
  - Task 2: Self-Healing Capability
  - Task 3: Blackstart Capability
- Goal 2: Acquire, Archive Microgrid Field Data
  - UCIMG
- Next Steps
- Technology Transfer

© 2020 UC Irvine Advanced Power and Energy Program

UCI Microgrid

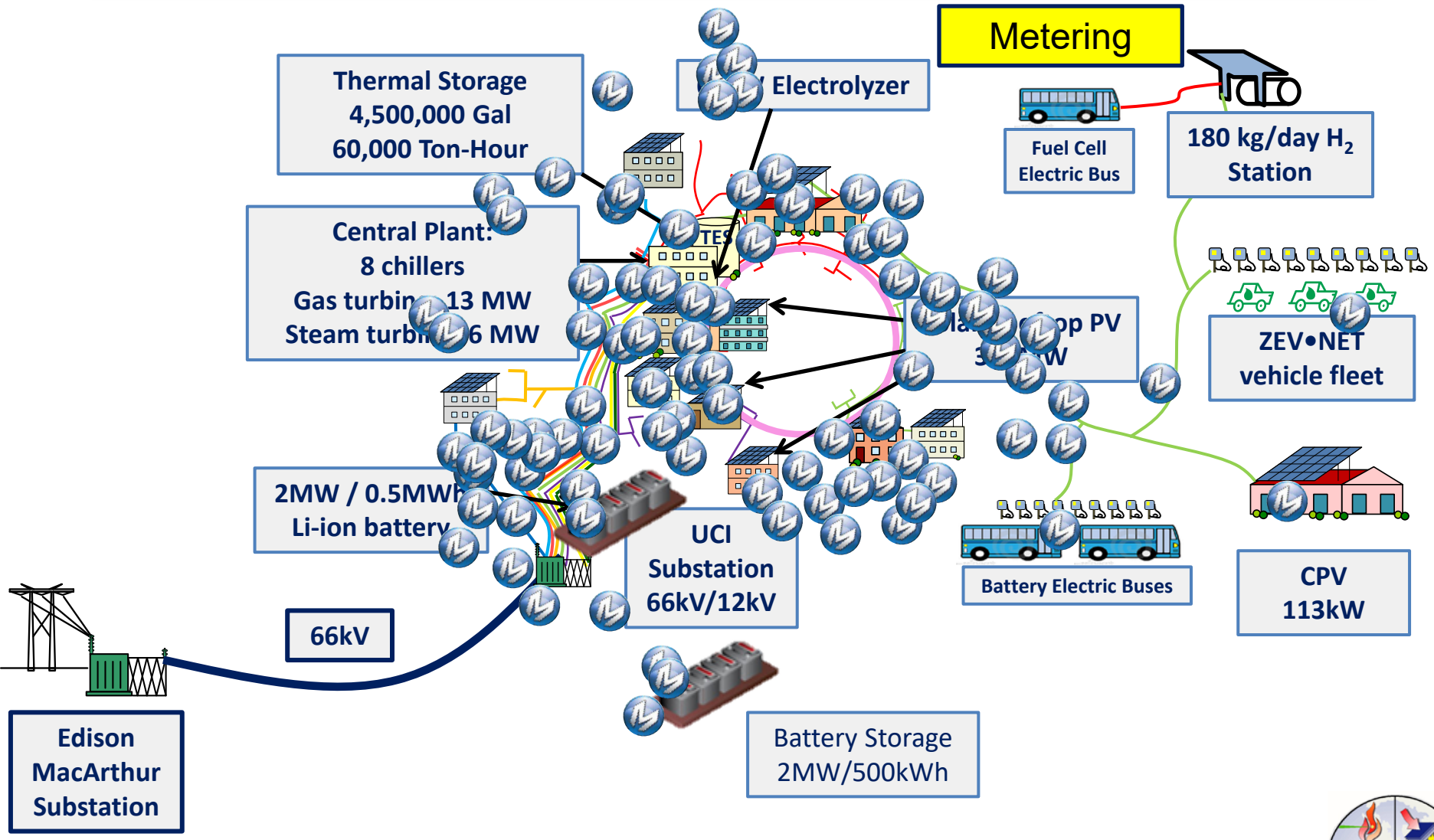

Outline

- Goals
- Goal 1: Enhance GMC with Reliability and Resiliency
  - Task 2: Self-Healing Capability
  - Task 3: Blackstart Capability
- Goal 2: Acquire, Archive Microgrid Field Data
- Next Steps
- Technology Transfer

© 2020 UC Irvine Advanced Power and Energy Program

Next Steps

- **Blackstart Generator Deployment (Design/Analysis)**
- **GMC Deployment (Design/Analysis)**
- **Microgrid Near-Vicinity Resiliency Service**
  - **Assist restoration of utility assets**
  - **Application of Resilient-Enabled GMC to Substation Feeders**
- **Microgrid/Grid Support**
  - **Explore interconnections and limits**
  - **Application of Resilient-Enabled GMC to Wild-Fire Microgrids**

SOUTHERN CALIFORNIA EDISON

© 2020 UC Irvine Advanced Power and Energy Program

Microgrid Near-Vicinity Resiliency Service

Assist restoration of utility assets

- **UCIMG blackstart SCE substation**

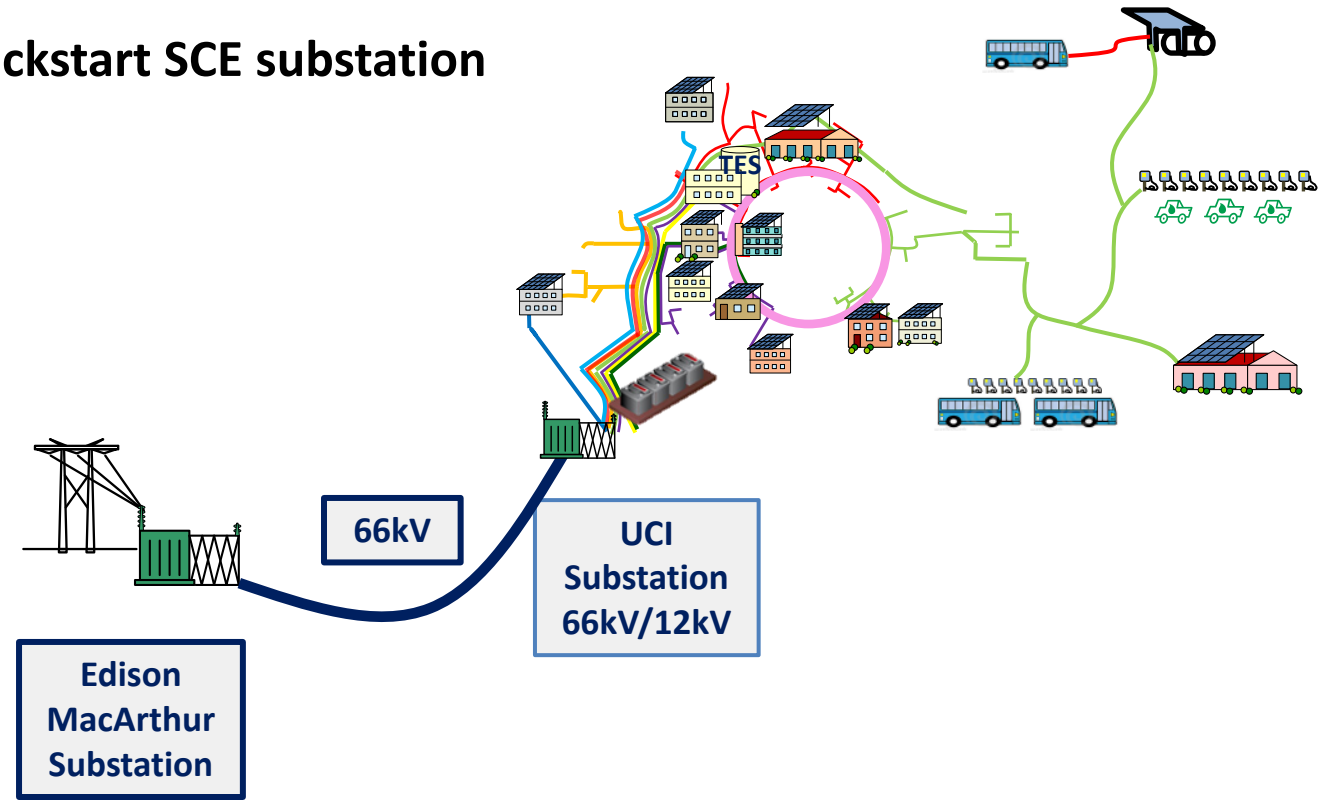

Microgrid Near-Vicinity Resiliency Service

Application of resilient-enabled GMC to substation feeders

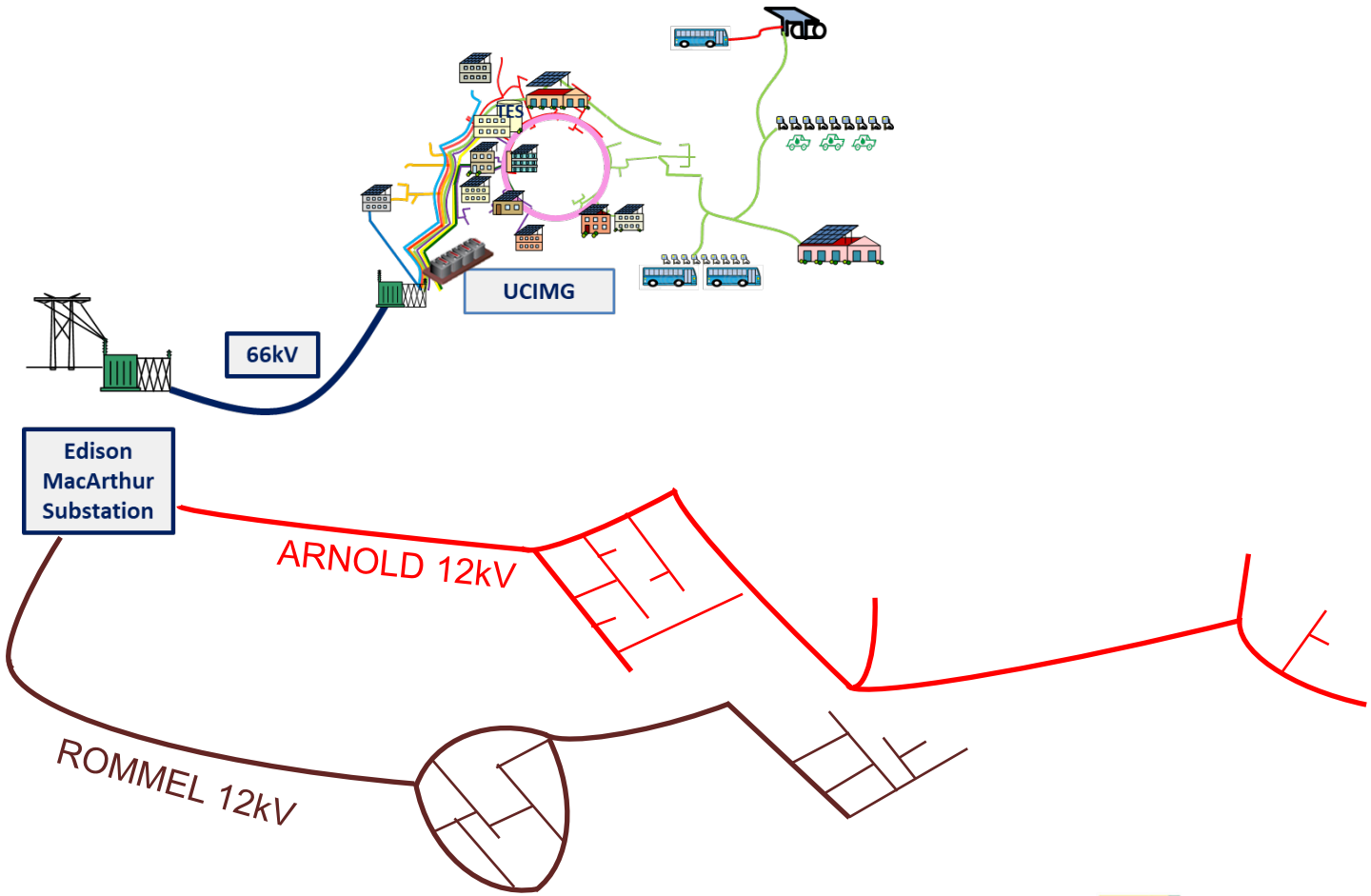

Microgrid Near-Vicinity Resiliency Service

Application of Resilient-Enabled GMC to Substation Feeders

- **Higher penetration of DERs can be achieved with substation control and automation**
- **Community energy storage is a more economic approach for achieving high PV penetration and GHG reduction than residential storage**
- **Fuel cell deployment at the substation improves reliability of the system**
- **Participation in the distributed energy resource market benefits the grid as well as the resource owner or aggregator.**

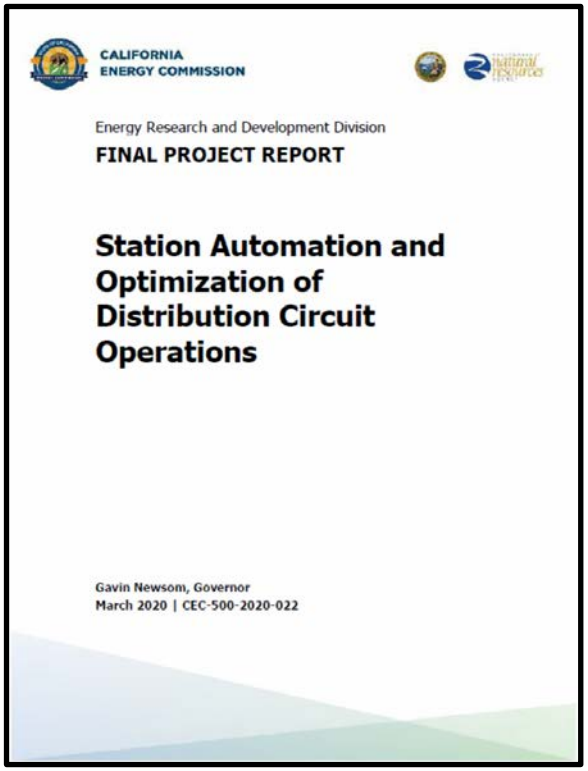
CALIFORNIA ENERGY COMMISSION

Energy Research and Development Division

FINAL PROJECT REPORT

Station Automation and Optimization of Distribution Circuit Operations

Gavin Newsom, Governor

March 2020 | CEC-500-2020-022

https://ww2.energy.ca.gov/2020publications/CEC-500-2020-022/CEC-500-2020-022.pdf

© 2020 UC Irvine Advanced Power and Energy Program

Microgrid Near-Vicinity Resiliency Service

Application of Resilient-Enabled GMC to Substation Feeders

- Higher penetration of DERs can be achieved with substation control and automation
- **Add Critical Load Restoration**
  - **Utilize DERs within the substation feeders**
  - **Utilize PEVs as emergency resource**
- Fuel cell deployment at the substation improves reliability of the system
- Participation in the distributed energy resource market benefits the grid as well as the resource owner or aggregator.

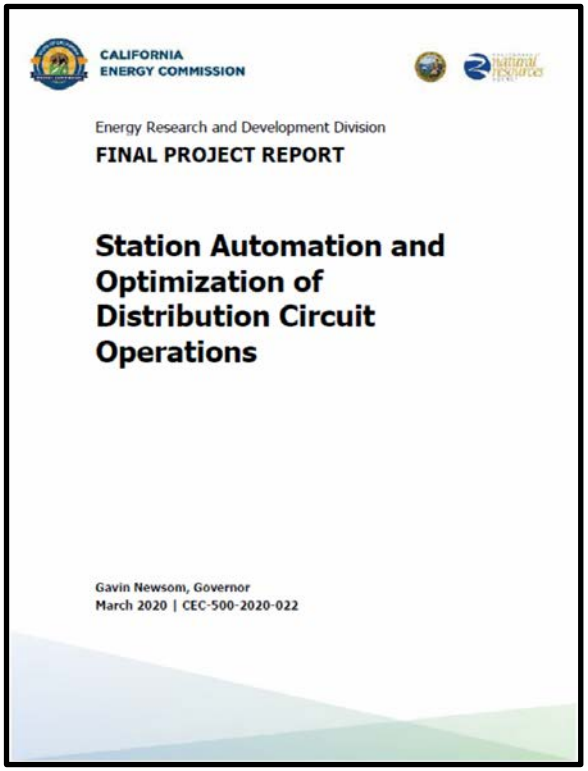
CALIFORNIA ENERGY COMMISSION

Energy Research and Development Division

FINAL PROJECT REPORT

Station Automation and Optimization of Distribution Circuit Operations

Gavin Newsom, Governor
March 2020 | CEC-500-2020-022

https://ww2.energy.ca.gov/2020publications/CEC-500-2020-022/CEC-500-2020-022.pdf

Next Steps

- **Blackstart Generator Deployment (Design/Analysis)**
- **GMC Deployment (Design/Analysis)**
- **Microgrid Near-Vicinity Resiliency Service**
  - **Assist restoration of utility assets**
  - **Application of Resilient-Enabled GMC to Substation Feeders**
- **Microgrid/Grid Support**
  - **Explore interconnections and limits**
  - **Application of Resilient-Enabled GMC to Wild-Fire Microgrids**

SOUTHERN CALIFORNIA EDISON

© 2020 UC Irvine Advanced Power and Energy Program

Microgrid/Grid Support

Explore Interconnections and Limits

- **Between microgrids, utility, and the ISO**
- **Use of microgrid resources**
  - **Serving critical load**
  - **System restoration**
  - **Serving adjacent communities**

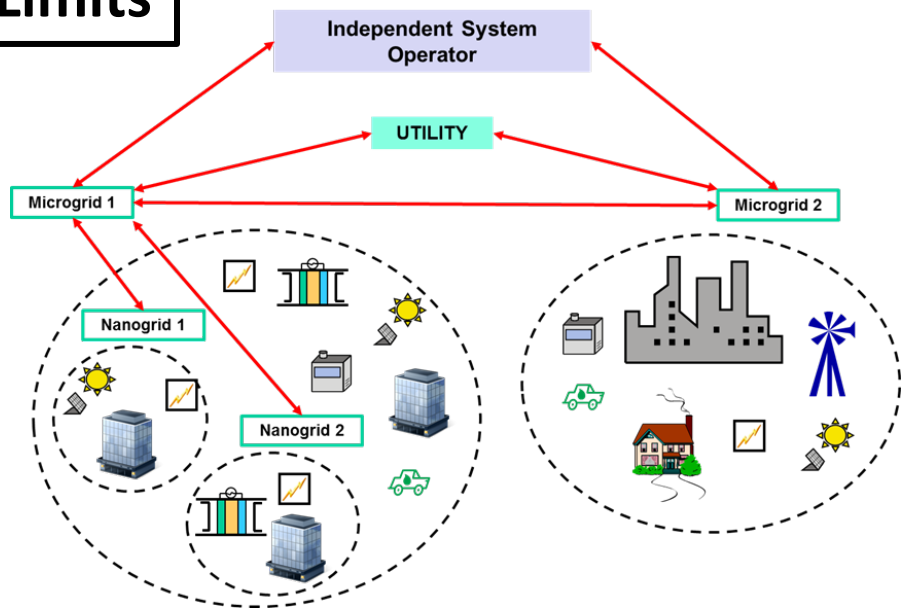

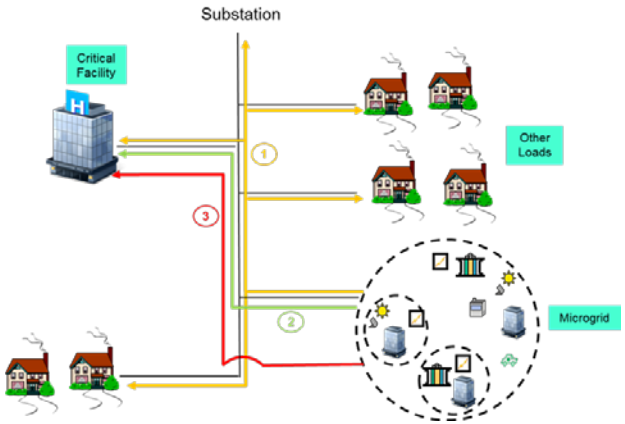

© 2020 UC Irvine Advanced Power and Energy Program

Microgrid/Grid Support

Application of Resilient-Enabled GMC to Wild-Fire Microgrids

- **DER dynamics integration**
  - Use of smart inverters for grid support
  - Interaction of smart and legacy inverters and multiple smart inverters in a system
- **Volt/VAR control**
  - Grid restoration using inverter-based resources
  - Assess inverter-based resources in maintaining system inertia
- **Microgrid Control**
  - Demonstrate islanding and blackstart capability
  - Integrate microgrid controller with SCE Grid Management System and SCE battery
  - Coordinate microgrid to improve resiliency and provide grid services

© 2020 UC Irvine Advanced Power and Energy Program

SOUTHERN CALIFORNIA EDISON

Outline

- **Goals**
- **Goal 1: Enhance GMC with Reliability and Resiliency**
  - **Task 2: Self-Healing Capability**
  - **Task 3: Blackstart Capability**
- **Goal 2: Acquire, Archive Microgrid Field Data**
- **Next Steps**
- **Technology Transfer**

© 2020 UC Irvine Advanced Power and Energy Program

Technology Transfer

- **Annual Energy Colloquium**
  - ICEPAG
- **Publications**
  - GMC, Self Healing Microgrids, Islanding, ….
- **Deployment**
  - Blackstart Generator (Cummins)
  - GMC (SEL)
- **Microgrid and DER Developers**
  - Schneider Electric
  - Emera
  - Schweitzer Engineering Laboratories
  - Emerson
  - Bloom Energy
  - FuelCell Energy
  - Cummins
  - Solar Turbines
  - …….
- **Utility Engagement**
  - Southern California Edison

© 2020 UC Irvine Advanced Power and Energy Program

Contacts

- **Professor Scott Samuelsen**

  Advanced Power and Energy Program
  University of California, Irvine
  Irvine, California 92697-3550
  gss@apep.uci.edu
  949-824-7302 ext. 11-224

- **Breyah Matthews**

  Advanced Power and Energy Program
  University of California, Irvine
  Irvine, California 92697-3550
  bem@apep.uci.edu
  949-824-7302 ext. 11-349

- **Jennifer Lee**

  Advanced Power and Energy Program
  University of California, Irvine
  Irvine, California 92697-3550
  jjl@apep.uci.edu
  949-824-7302 ext. 11-349

© 2020 UC Irvine Advanced Power and Energy Program

Self-Healing Microgrids

Enhancing GMC Self-Healing Attributes

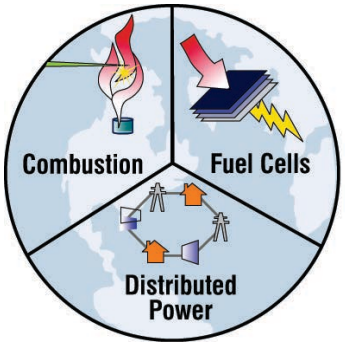

ADVANCED POWER & ENERGY PROGRAM
UNIVERSITY of CALIFORNIA · IRVINE

2020 Microgrid Program Review
June 11, 2020

Breyah Matthews
Jennifer Lee
Scott Samuelsen