2020 Microgrid R&D Program
Peer Review Meeting

Advanced Protection System for Microgrids

Matthew Reno
Sandia National Laboratories

June 10, 2020

Sandia National Laboratories is a multimission laboratory managed and operated by National Technology and Engineering Solutions of Sandia, LLC., a wholly owned subsidiary of Honeywell International, Inc., for the U.S. Department of Energy's National Nuclear Security Administration under contract DE-NA0003525.

Advanced Protection System for Microgrids

Objectives & Outcomes

- Holistic approach to address the challenges of distribution system and microgrid protection design under high penetrations of inverter-based DER.
- Develop, validate, and demonstrate highly reconfigurable communication-based protection schemes in coordination with ORNL

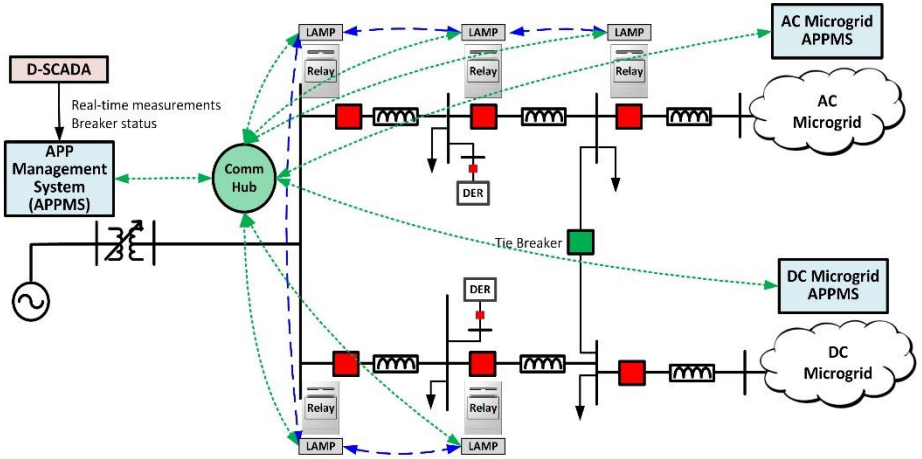

Technical Scope

- PV Inverter Fault Testing and Grid-Forming Inverter Models for Microgrid Fault Studies
- Intelligent Adaptive Protection Schemes for Microgrids
- HIL Protection Analysis with COTS Relays and DER
- Relay-less Protection Systems for Microgrids
- Work with IEEE to develop standards for Microgrid Protection Design

Funding Summary ($K)

FY19, authorized	FY20, authorized	FY21, requested
$500k	$500k	$500k

Industry Need and Challenge

- Traditional distribution protection systems are designed for radial flows with large fault currents from synchronous and induction machines
  - Short-circuit modeling and protection of traditional systems is well established
  - *Increasing penetration of inverter-interfaced resources underscore the need of inverter models for short circuit studies*
- Adoption of microgrids also provides new challenges for protection
  - In order to provide reliability and resilience, microgrids must be protected and secure in grid-connected and islanded
  - The challenge of protecting microgrids limits their adoption
  - Microgrid protection is especially difficult for inverter-based systems because of the lack of models and inverters' low fault currents

As microgrids proliferate with the sharp increase in renewable-fed distributed generation, islanded operation of microgrids that are fed entirely by inverter-based renewables is becoming an imminent reality

100% Inverter-Based System Protection Challenges

- 100% inverter-based systems present a new set of challenges for protection
- Inverters do not provide significant current during faults
  - Overcurrent protection schemes might not detect the fault
  - Fault currents can look similar to motor starts or inrush
  - With low fault currents, the fault currents are more sensitive to generation dispatch, complicating coordination
- Other Protection Challenges Include:
  - Inverters do not provide zero sequence or negative sequence fault currents (depending on the controls)
  - Inverters have no inherent inertia, and their transient responses vary depending on the controls. How does this impact Power Swing Blocking and Out-of-step Tripping functions?
  - Inverter fault current response depends on the pre-fault conditions (e.g. power output level, power factor, etc.), so they have to be included in the models and analysis

Technical Approach - Tasks and Milestones

- PV Inverter Fault Testing and Grid-Forming Inverter Models for Microgrid Fault Studies
- Intelligent Adaptive Protection Schemes for Microgrids
- HIL Protection Analysis
- Relay-less Protection Systems for Microgrids
- Work with IEEE to develop standards for Microgrid Protection Design

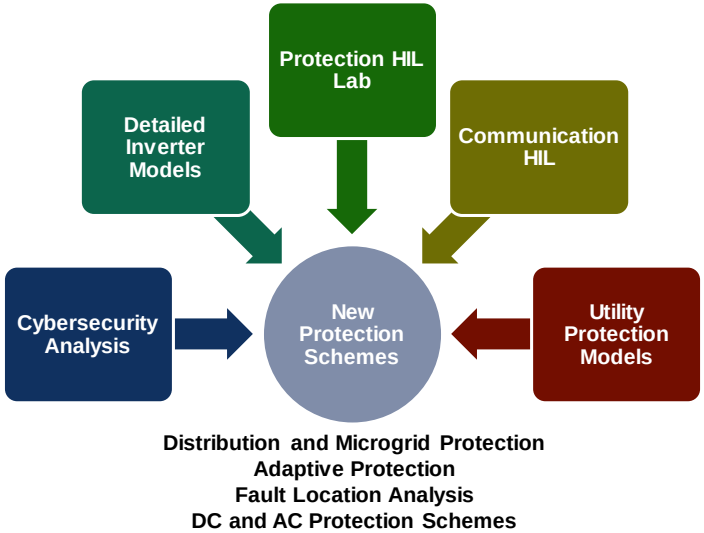

	Date	Milestone Description
✓	12/31/19	Validated grid-forming inverter models with the ability to simulate mode transitions from grid connected to islanded
✓	03/31/20	Demonstrate integration of additional communication into microgrid protection schemes, such as microgrid controller or inverters.
✓	06/30/20	Intelligent adaptive protection algorithm. Demonstrate ability to distinguish status of breakers and generators in the microgrid without communication.
	09/30/20	Demonstrate high-frequency simulation of faults signatures in microgrids

Significance and Impact

Innovative

- Developing new modeling and new microgrid protection schemes that will yield insights into local and wide area relaying philosophy with complimentary hybrid protection systems that are more resilient
- Combining algorithm development with experimental and hardware-in-the-loop testing

High Impact

- Involvement in the IEEE Power System Relaying Committee (PSRC) to provide expertise and impact to standards and guides for microgrid protection
- Developing and testing protection schemes to work with existing microgrids and distribution circuits with high DER penetrations at PNM, National Grid, Alaska Co-ops, and EPB. The collaboration will enable the validation and testing of developed protection systems on microgrids.
- Enabling future deployment of microgrids to improve reliability, resilience, and security

Prior Progress and Results

- DC Microgrid Protection
  - Developed new protection for DC microgrids
  - Ability to detect high impedance faults and faults inside the converters
- Implemented and Tested a Range of Protection Schemes for Effectiveness with Inverter-Based Microgrids
  - Including various fault location algorithms
- Cybersecurity of Protective Relays
  - Conducted cyber vulnerability assessments, and published cybersecurity best practices guide
  - Research new intrusion detection systems, blockchain communication, and device-level security

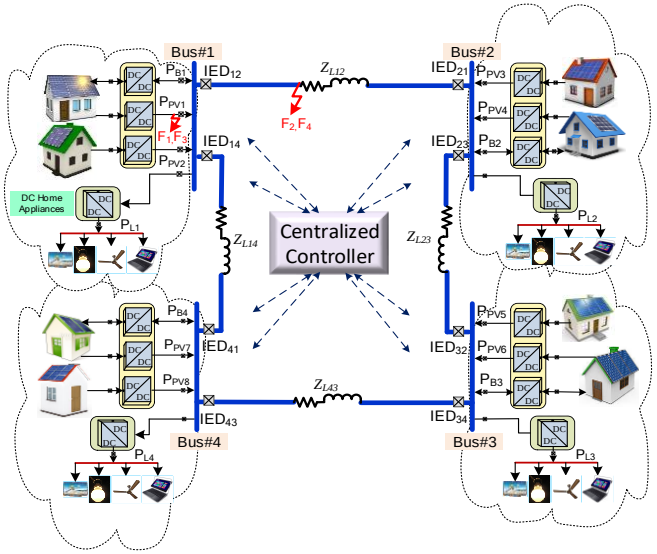

- Power hardware – inverters, PV simulator, grid-forming inverters, energy storage, controllable loads, Home/building/network EMS
- Demonstrated adaptive protection
- Grid-connected, off-grid and microgrid, and networked microgrid reconfiguration

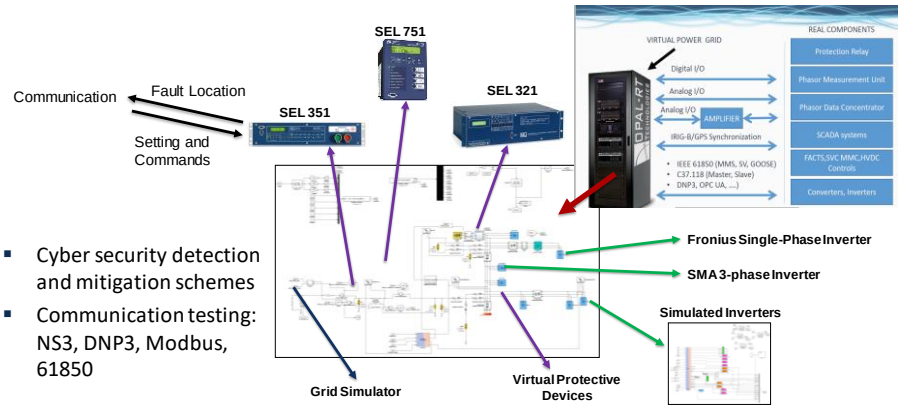

- Cyber security detection and mitigation schemes
- Communication testing: NS3, DNP3, Modbus, 61850

PV Plant Fault Characteristics

- 22.5 MW PC system at 34.5 kV with wye-grounded/delta transformer
- Fault BG with PV at 0.71 pu power output prefault

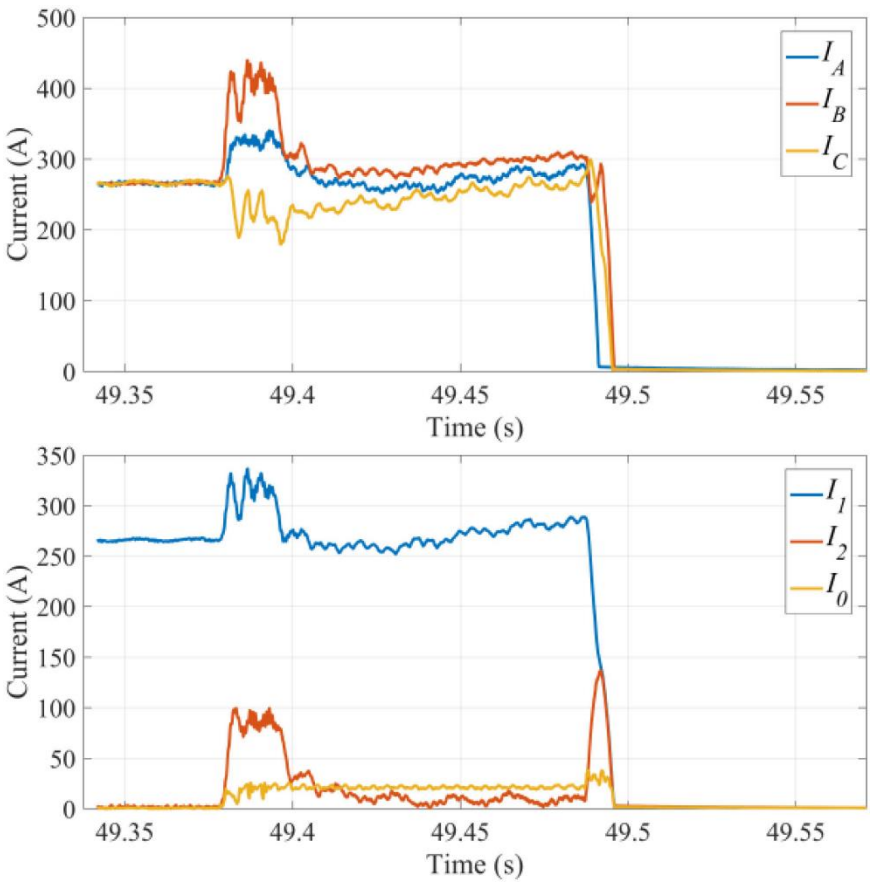

Two Key Periods Seen:

- Transient Period (1.5 cycles)
  - 1.1 pu phase current
  - 0.75 pu positive sequence current
  - 0.2 pu negative sequence current
  - <0.1 pu zero sequence current
- Steady-State Fault Current
  - 0.79 pu phase current
  - 0.75 pu positive sequence current
  - 0.03 pu negative sequence current
  - 0.06 pu zero sequence current

Conclusions

- Very little increase in inverter current during the fault
- No real negative or zero sequence current injected

G. Kou, L. Chen, P. VanSant, F. Velez-Cedeno and Y. Liu, "Fault Characteristics of Distributed Solar Generation," in *IEEE Transactions on Power Delivery*, vol. 35, no. 2, pp. 1062-1064, April 2020.

Inverter Response to Phase Angle Jumps

- During faults, the voltage angle suddenly changes due to a change in the X/R ratio with the new resistance to ground
- For grid-following inverters, the PLL tracks the voltage angle to keep a specific power factor.
- Experimental tests shown for a 24 kVA inverter with a 20° shift in all three phases (3-phase-to-ground fault)
  - PLL controls the current back to the setpoint (unity power factor) in ~1 cycle

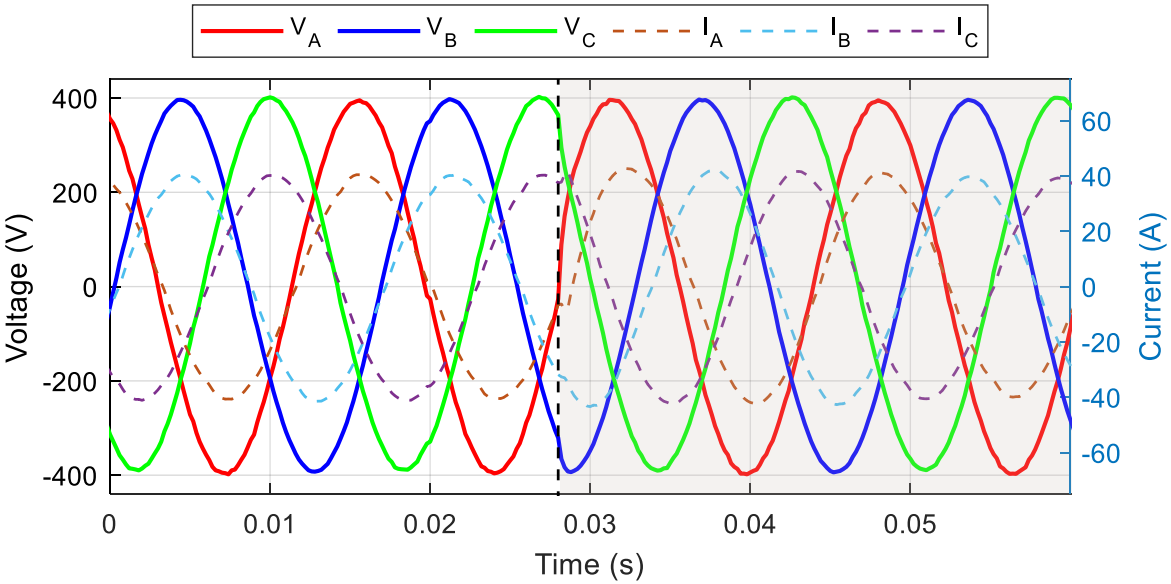

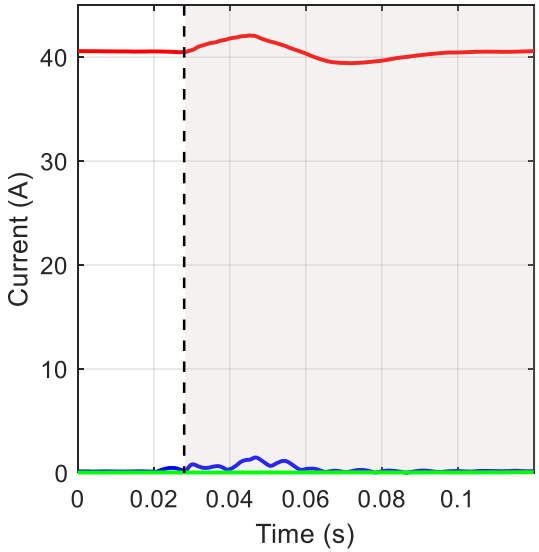

R. Darbali-Zamora, J. Johnson, M. J. Reno, and N. S. Gurule, "Evaluation of Photovoltaic Inverters Under Balanced and Unbalanced Voltage Phase Angle Jump Conditions," IEEE Photovoltaic Specialists Conference (PVSC), 2020.

Inverter Tests - Fault Characterization

- Grid-following inverters (GFLI) generally have very low fault current contributions (1.1-1.2 of their rated current)
- Grid-forming inverters (GFMI) can deliver 2x the rated current for about 60 seconds

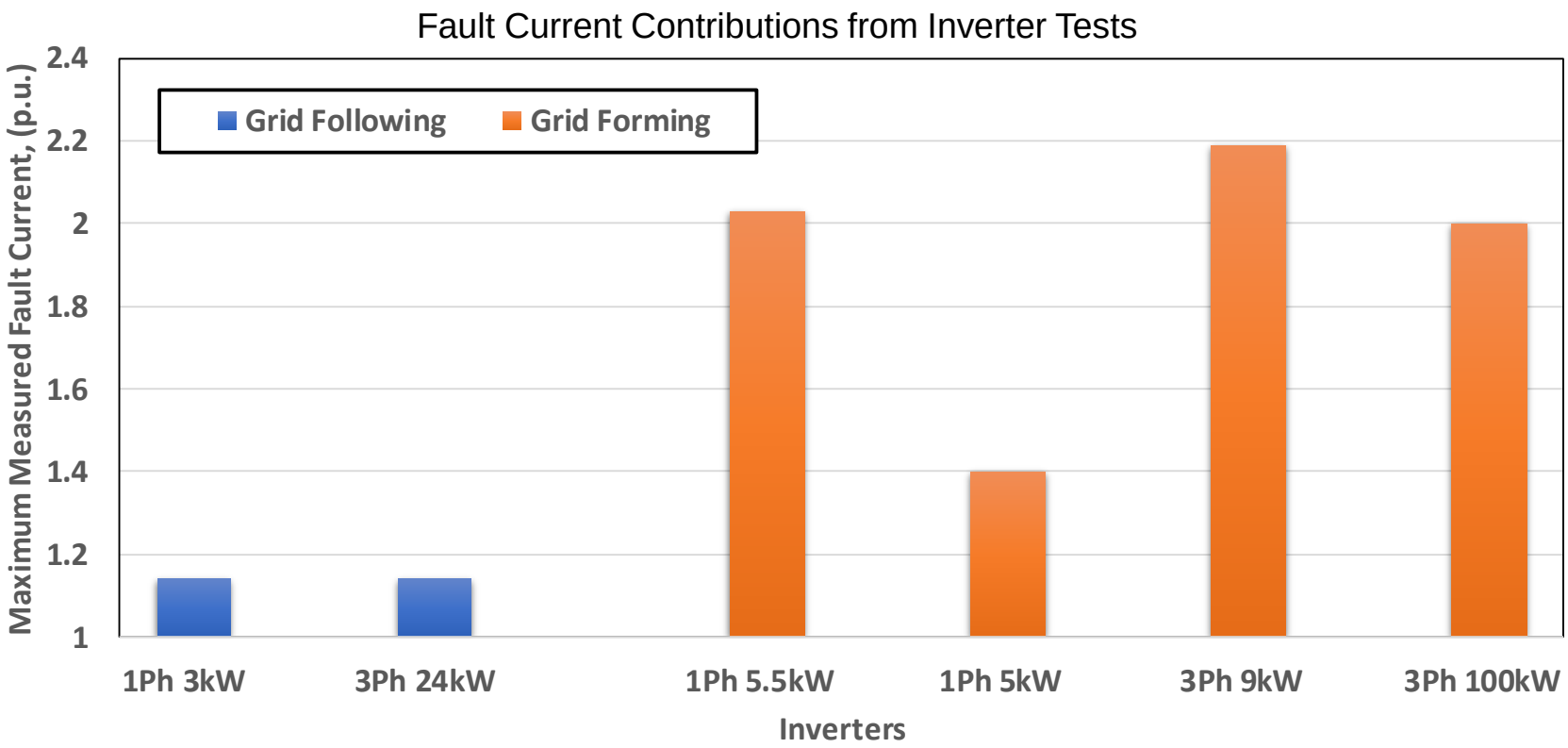

N. S. Gurule, J. Hernandez-Alvidrez, M. J. Reno, A. Summers, S. Gonzalez, and J. Flicker, "Grid-forming Inverter Experimental Testing of Fault Current Contributions," IEEE Photovoltaic Specialists Conference (PVSC), 2019.

Inverter Tests – Single-Line-to-Ground Fault

Single-Line-to-Ground Fault Diagram

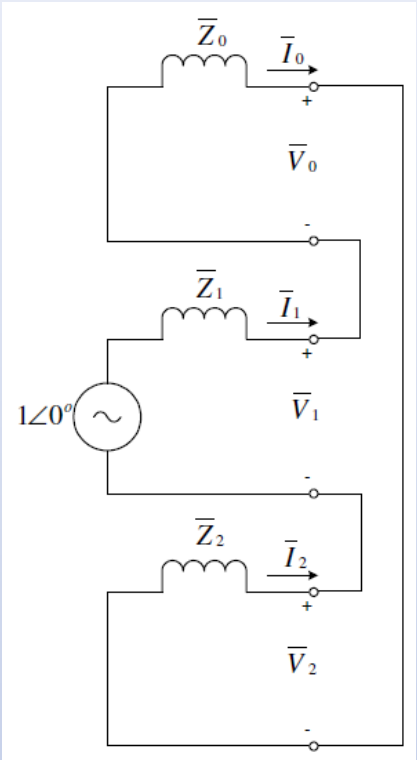

$I_0 = I_1 = I_2$

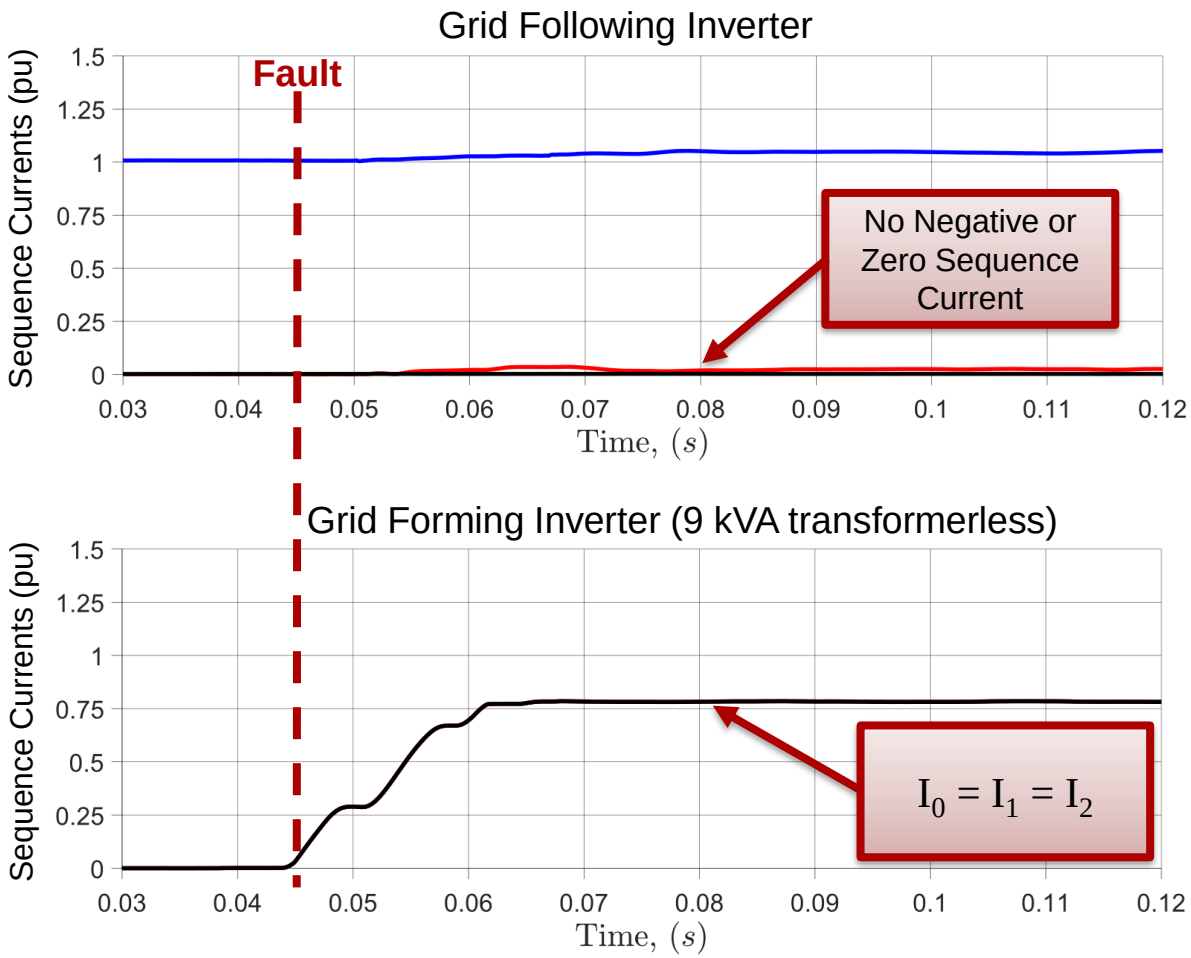

Inverter Tests – Single-Line-to-Ground Fault

Single-Line-to-Ground Fault Diagram

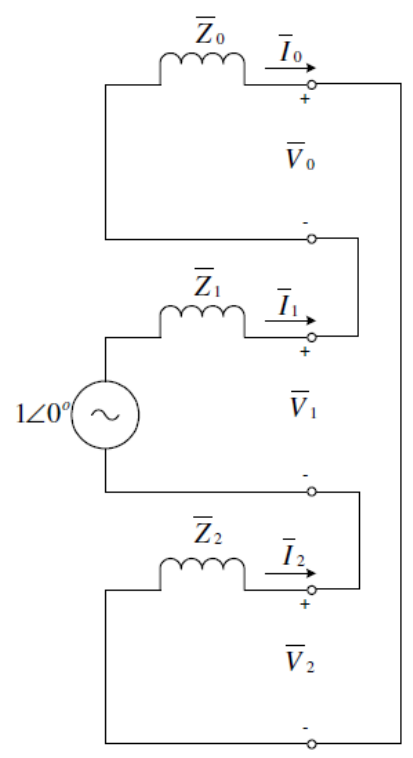

$I_0 = I_1 = I_2$

- 100 kVA Grid-Forming Inverter
- Delta-wye step-up transformer (inverter on delta side), inverter provides negative sequence currents and zero sequence currents provided by transformer

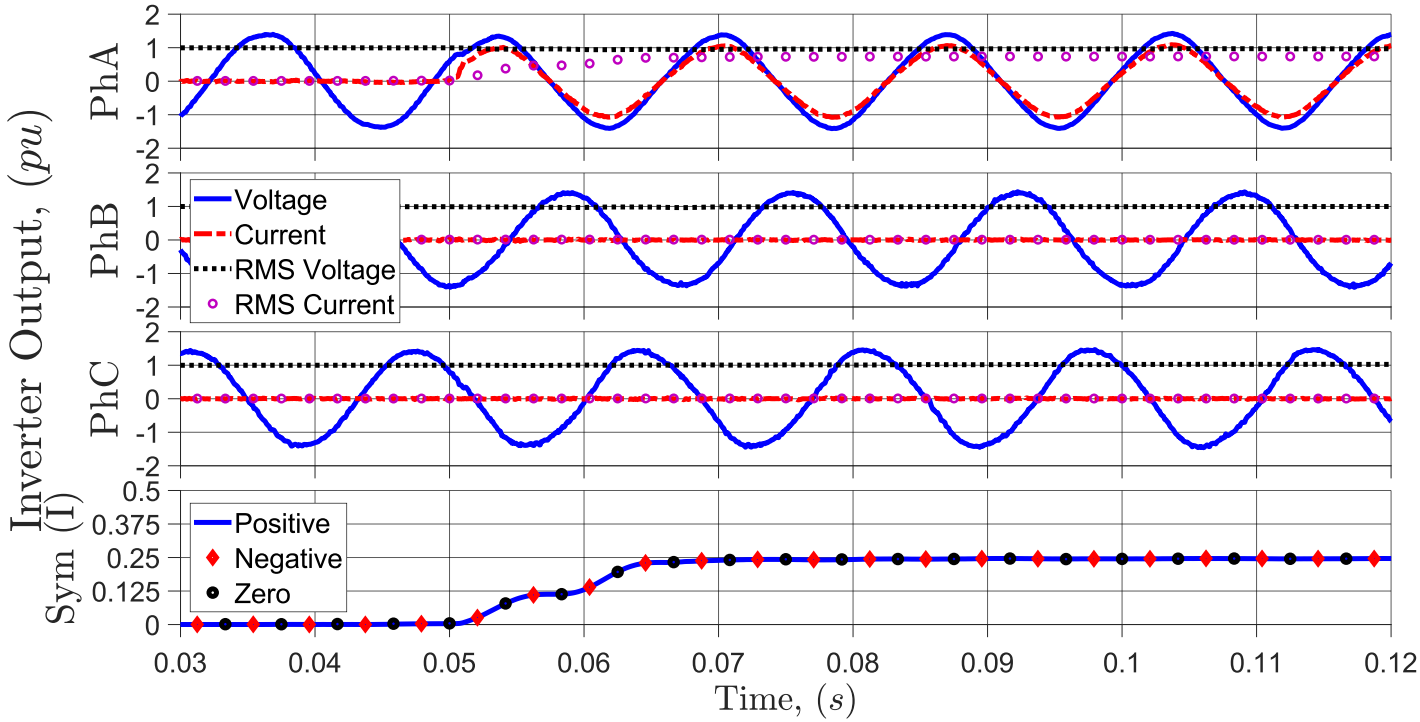

N. S. Gurule, J. Hernandez-Alvidrez, R. Darbali-Zamora, M. J. Reno, and J. D. Flicker, "Experimental Evaluation of Grid-Forming Inverters Under Unbalanced and Fault Conditions," IEEE Industrial Electronics Conference (IECON), 2020.

Validation of Inverter Models under Faults

- Develop models of grid-forming inverters that match the response of the experimental tests of grid-forming inverters
  - Models are challenging to develop because of the differences between manufacturers, single vs. three-phase inverters, PV vs. energy storage vs. grid forming inverters.
- For protection analysis, the main interest is the fault current contribution of the inverter, which is determined by the current limiting control
- Models must accurately match current limiter controls from different manufacturers, including the nonlinear potential square wave response
- Validating with power-hardware-in-the-loop

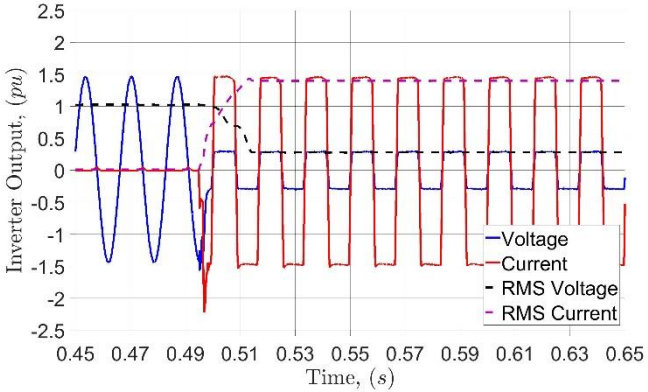

GFMI clipping current output during fault without peaking

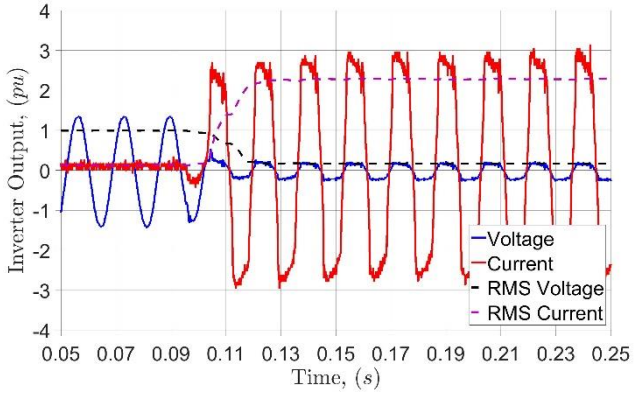

GFMI clipping output current during with peaking

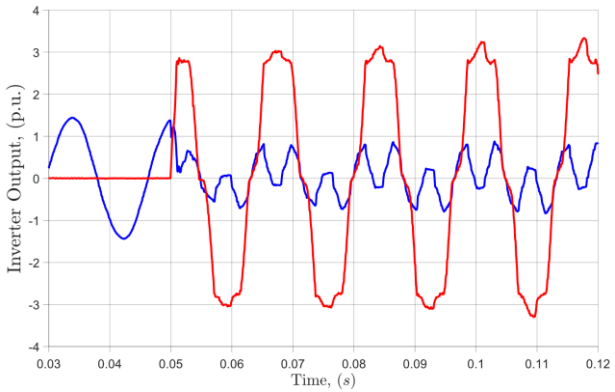

GFMI curtailing current output during with hysteresis control

J. Hernandez-Alvidrez, N. S. Gurule, M. J. Reno, J. D. Flicker, A. Summers, and A. Ellis " Method to Interface Grid-Forming Inverters into Power Hardware in the Loop Setups," IEEE Photovoltaic Specialists Conference (PVSC), 2020.

Microgrid Protection

- Holistic approach to address the challenges of distribution system and microgrid protection under high penetrations of inverter-based DER
- Develop, validate, and demonstrate highly reconfigurable communication-based, adaptive overcurrent, and non-overcurrent schemes

Optimal Relay Placement in Microgrids

- Determine the location of relays for new microgrid designs
- Find the optimal locations for a fixed number of relays
- The proposed algorithm considers both grid-connected and islanded microgrid modes, with various types of DG. Any sub-island must have at least one grid-forming DG and power to supply the load
- Minimize SAIFI using 1) Exchange Market Algorithm (EMA) and 2) Particle Swarm Optimization (PSO)

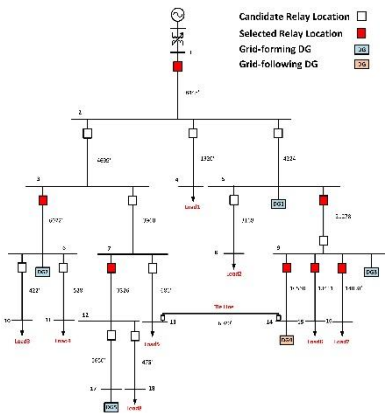

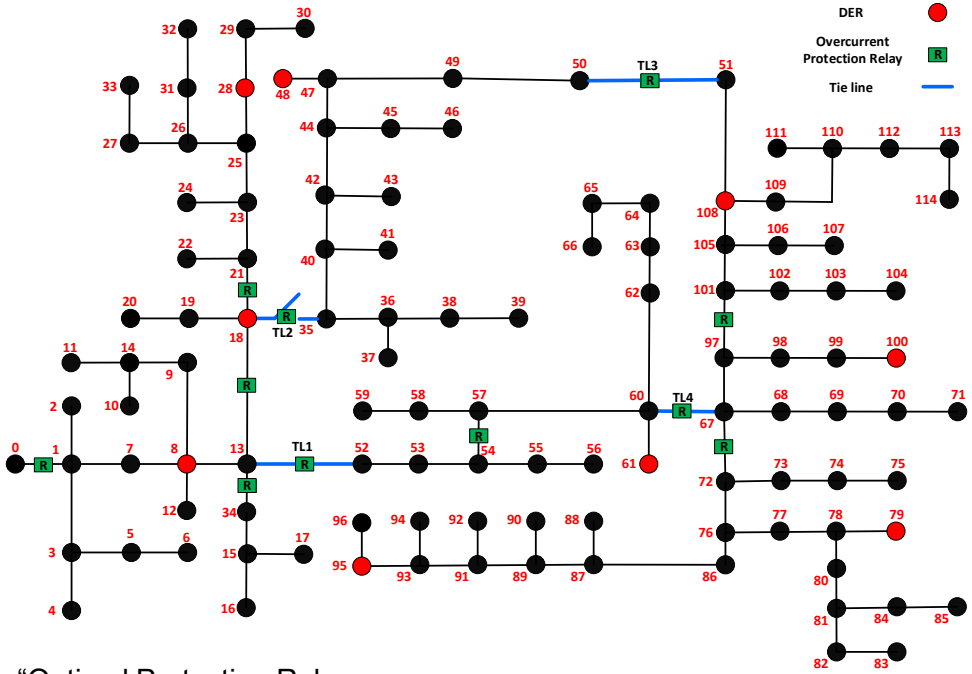

B. Reimer, T. Khalili, A Bidram, M. J. Reno, and R. C. Matthews, "Optimal Protection Relay Placement in Microgrids," IEEE Kansas Power and Energy Conference (KPEC), 2020.

Identification of Relay Type

- After determining the optimal relay locations, must identify the relay type (available protection functions) for that device
- Constraints that determine the protection type are based on:
  - Radial vs. meshed system
  - Potential directions of fault current flows (locations of generators in the microgrid)
  - Fault current magnitude (inverter-based generation)

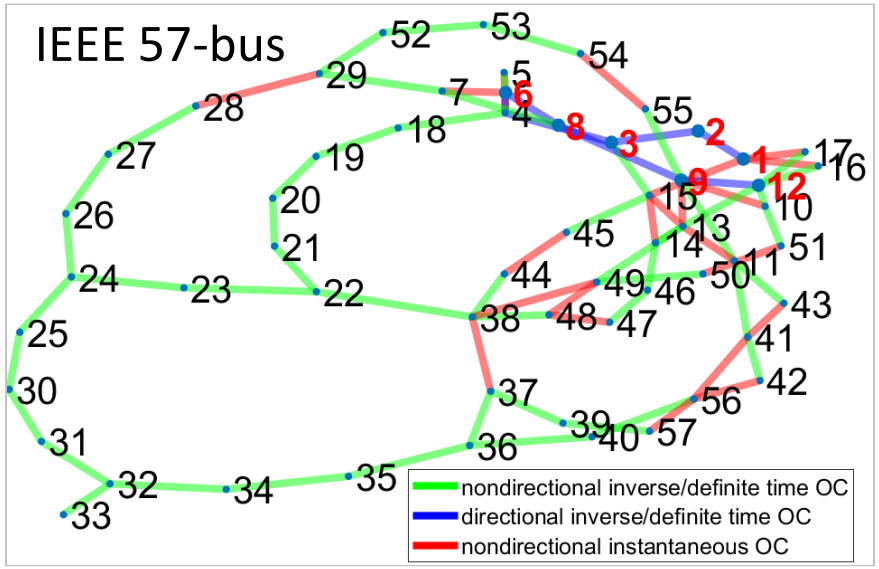

IEEE 30-bus

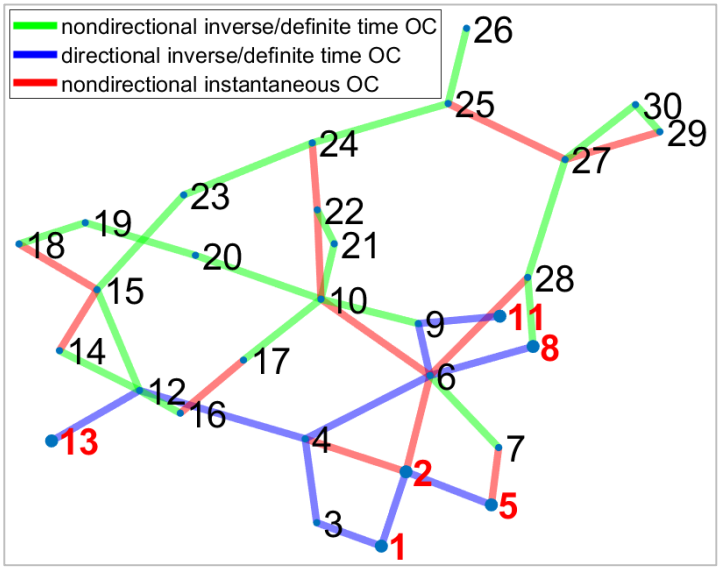

R. C. Matthews, A. Summers, and M. J. Reno, "An Algorithm for Placement of Directional and Nondirectional Time-Overcurrent Relays in a Fully Protected Network," IEEE PES General Meeting, 2020.

Use Case – Inverter-Based System Protection

- Using developed inverter models, design protection for PNM feeder to become an inverter-based microgrid
- Protection Challenges
  - Multiple sources of fault current
  - Bi-directional current
  - Low fault current during islanded mode
  - Large coordination ranges

Fault Current seen by recloser at Bus5		
	Grid Tied	Islanded
Max	3470 A	760 A
Min	250 A	45 A

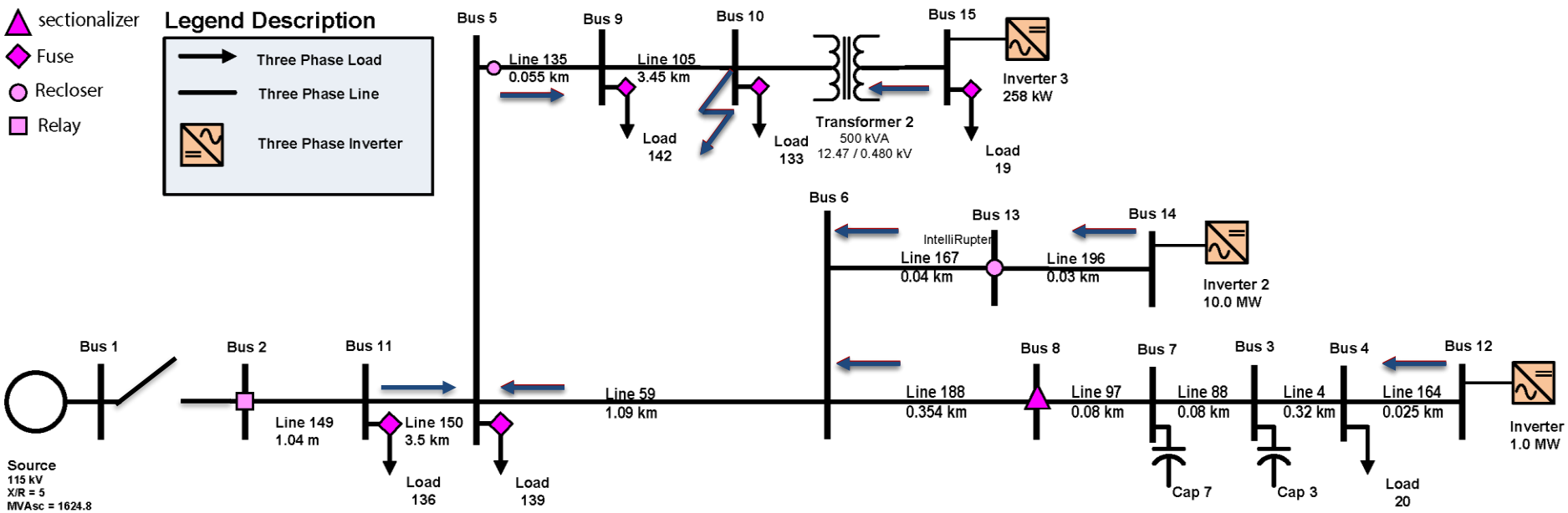

T. Patel, S. Brahma, J. Hernandez-Alvidrez, and M. J. Reno, "Adaptive Protection Scheme for a Real-World Microgrid with 100% Inverter-Based Resources," IEEE Kansas Power and Energy Conference (KPEC), 2020.

Solution - Adaptive Protection

- Adaptive Protection Platform (APP) to adjust protection settings based on the grid configuration and state
  - Can be programmed ahead of time (logic-based adaptive protection)
  - Or settings can be intelligently determined and selected in real-time to communicate

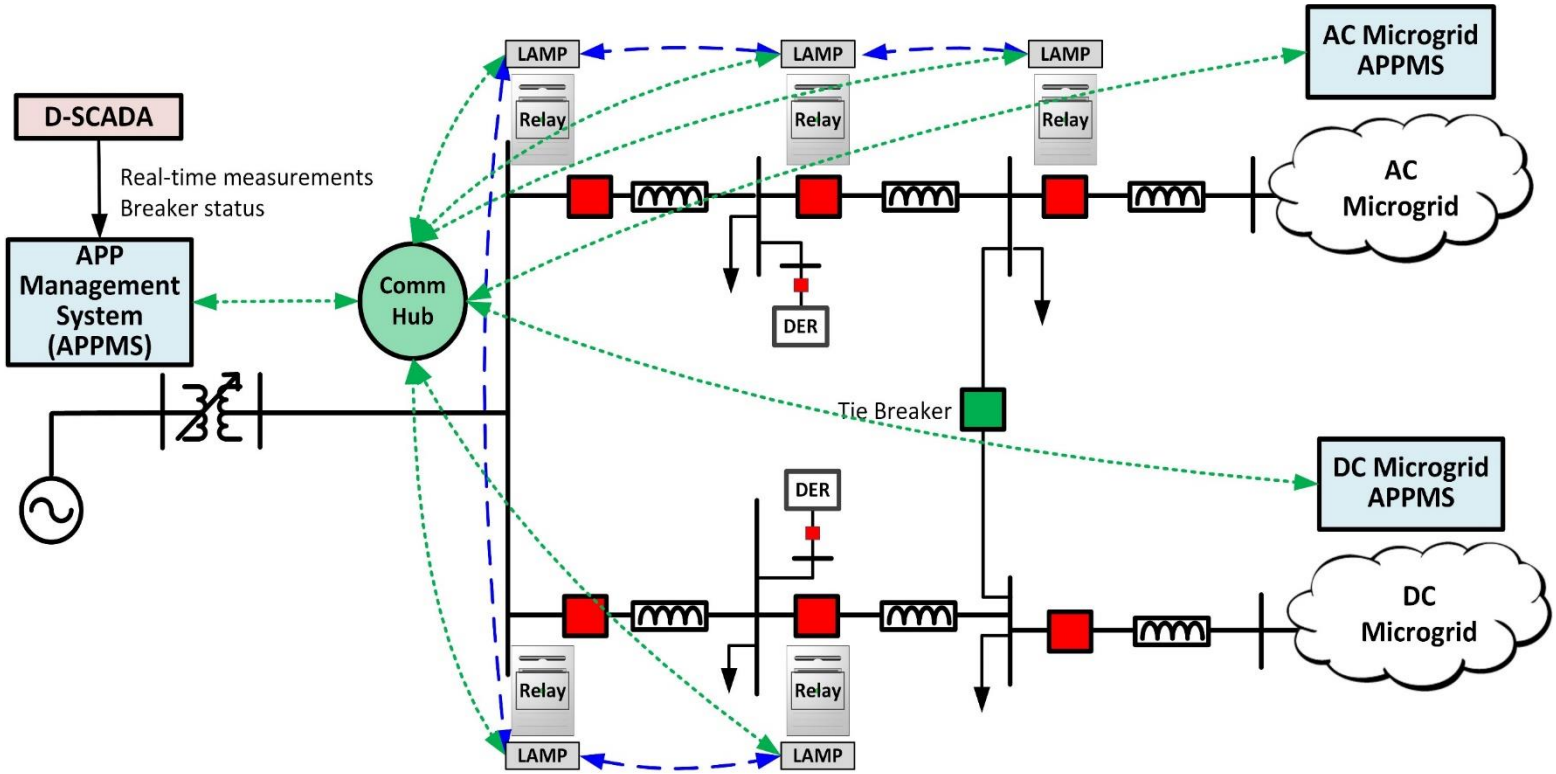

Optimal Adaptive Protection

- Determine relay settings in real-time for all devices based on the current system state (switching, grid-connected, generator dispatch, etc.)
- Given the system state, a detailed protection study can be performed
  - Testing all possible fault type, locations, and resistance (or a subset of salient faults) to come up with the best protection scheme
- Objective: Determine optimal coordinated settings to ensure:
  - **Dependability** – will always protect the system and remove faults
  - **Security** – not trip for non-fault conditions like motor starts, inrush, and cold load pickup
  - **Selectivity*** – protection is coordinated to remove as little of the un-faulted system as possible
  - **Sensitivity** – the ability to detect high impedance faults
  - **Speed** – removing the faulted section as quickly as possible

*Note – Under extreme resilience events, the selectivity constraint could be relaxed. While more customers may be lost in subsequent faults due to miscoordination, the system will still be secure and may allow for more customers to be served during the extreme event

Optimal Adaptive Protection Algorithm

The objective of the adaptive protection algorithm is to determine the optimal (speed) protection settings for a given network configuration

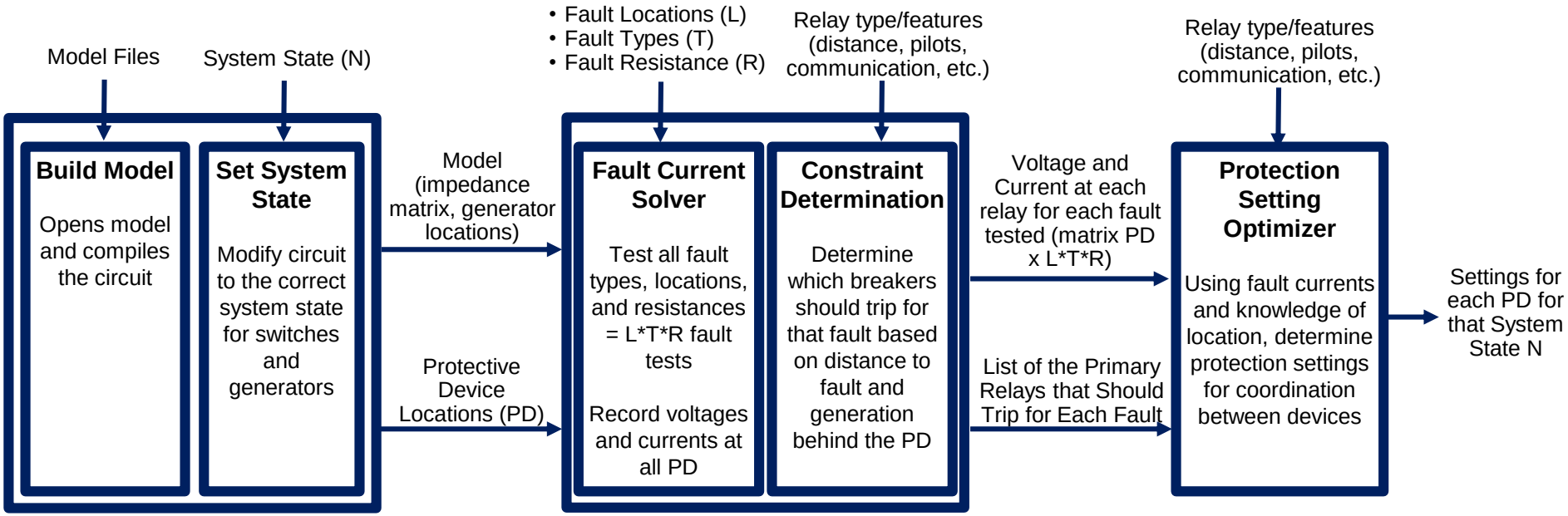

Protection Setting Optimizer

- Using fault currents and knowledge of location, determine optimal protection settings for coordination between devices and speed
- **Inputs**: fault current matrix, list of relays that should trip first, relay type/features (distance, pilots, communication, etc.)
- **Algorithm**: minimizes the sum of the operating times for the relays for all faults
- **Control Variables**: time dial, pickup current, curve type, protection function
- **Outputs**: optimal settings for each relay in that system state

$$\underset{TDS_{ij}}{\text{minimize}} \quad \sum_{(i,j)} T_{ij}$$

subject to

$$T_{ij} = TDS_{ij}\left(\frac{5.95}{M_{ijj}^2 - 1} + 0.18\right)$$

$$\begin{aligned}
T_{10,1} &\geq T_{1,4} + 0.25 \\
T_{11,2} &\geq T_{2,8} + 0.25 \\
T_{12,3} &\geq T_{3,6} + 0.25 \\
T_{9,4} &\geq T_{4,1} + 0.25 \\
T_{1,4} &\geq T_{4,5} + 0.25 \\
T_{9,4} &\geq T_{4,5} + 0.25 \\
T_{1,4} &\geq T_{4,9} + 0.25 \\
T_{7,6} &\geq T_{6,3} + 0.25 \\
T_{3,6} &\geq T_{6,7} + 0.25, \\
T_{8,7} &\geq T_{7,6} + 0.25 \\
T_{6,7} &\geq T_{7,8} + 0.25 \\
T_{7,8} &\geq T_{8,2} + 0.25 \\
T_{9,8} &\geq T_{8,2} + 0.25 \\
T_{2,8} &\geq T_{8,7} + 0.25 \\
T_{9,8} &\geq T_{8,7} + 0.25 \\
T_{2,8} &\geq T_{8,9} + 0.25 \\
T_{7,8} &\geq T_{8,9} + 0.25 \\
T_{8,9} &\geq T_{9,4} + 0.25 \\
T_{4,9} &\geq T_{9,8} + 0.25 \\
TDS_{min} &\leq TDS_{ij} \leq TDS_{max}
\end{aligned}$$

Communication-free Local Adaptive Protection

- Ensures reliable communication-free operation
- Local learning at each relay of expected communication from other devices for the grid state
- Only takes action when the communication system is down or a cyber intrusion is detected

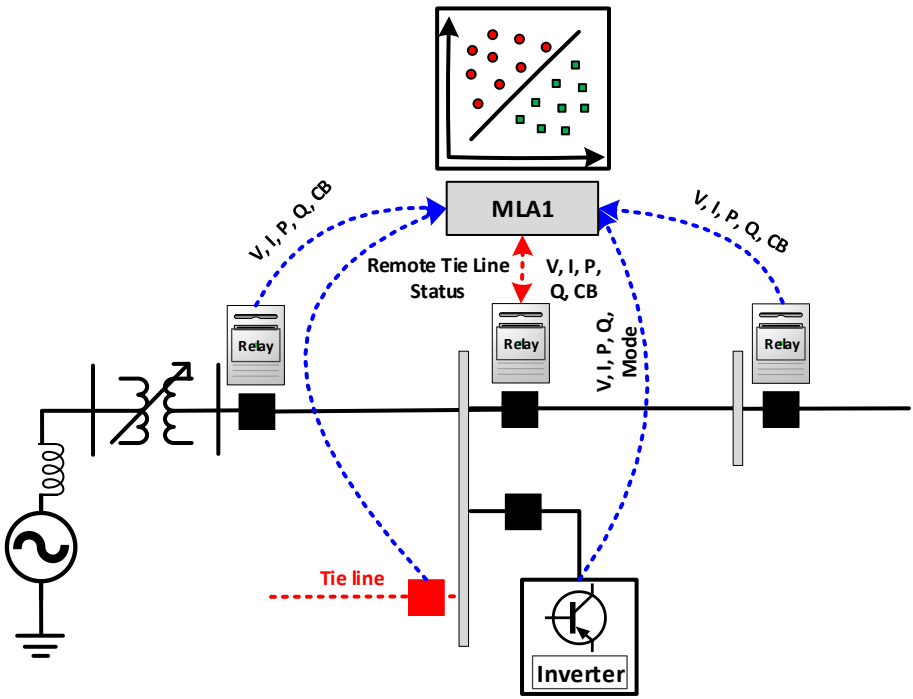

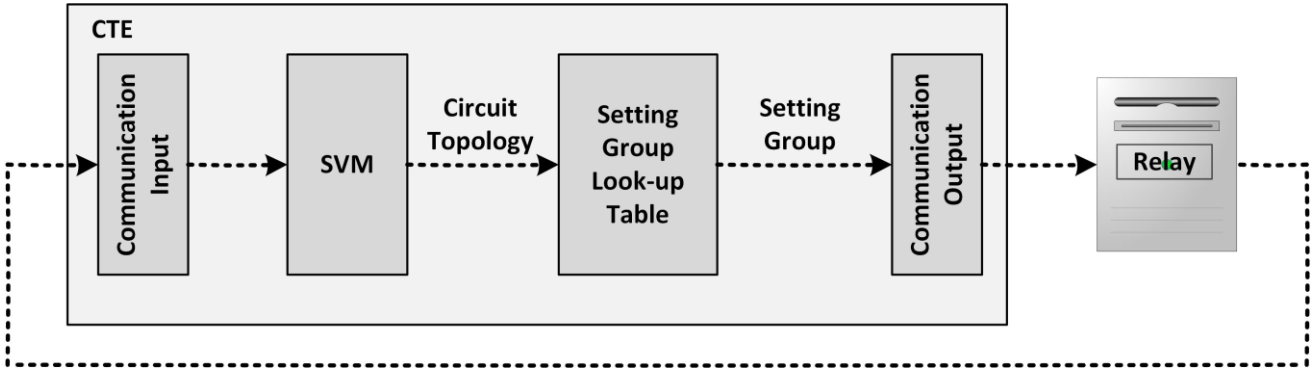

Topology Learning for Adaptive Protection

- Learn the status of the grid (breaker open/closed, microgrid connected or islanded)
- Train when communication is available
- Inputs: Local measurements (voltage, current, power), time, and day
- Outputs: Estimated status of other breakers
- Using Support Vector Machine (SVM) to learn and classify each switch in the network as open or closed

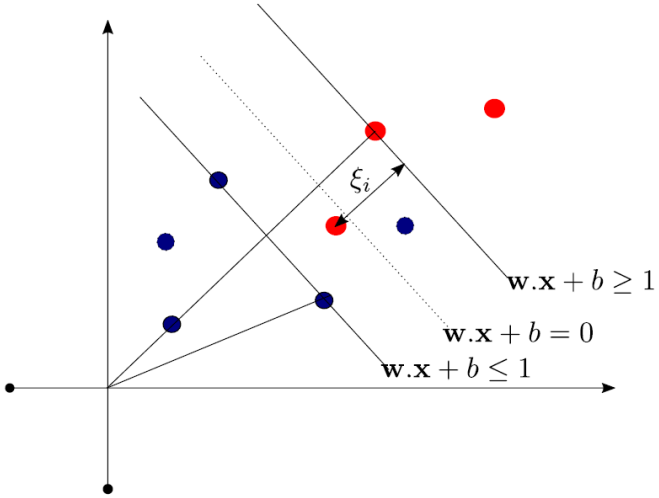

Tie Line / Breaker	Accuracy
TL1	98.2%
TL2	98.0%
CB2	99.5%
CB3	96.9%

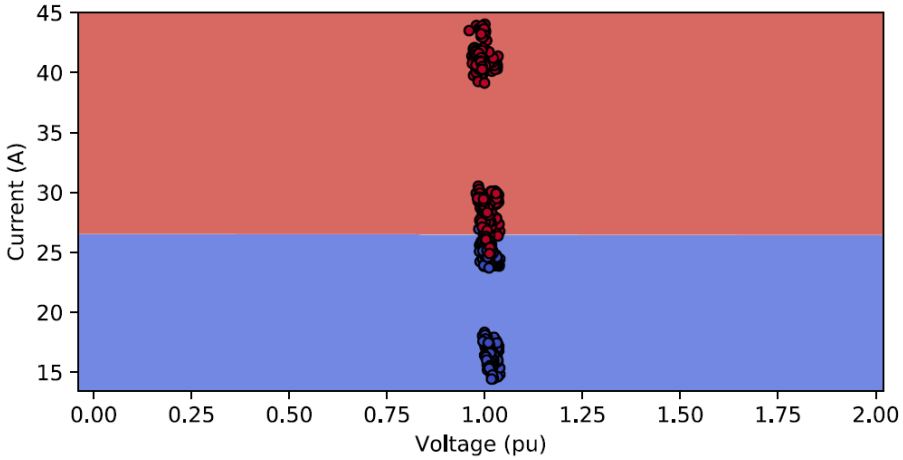

B. Poudel, A. Bidram, and M. J. Reno, "Circuit Topology Estimation in an Adaptive Protection System," IEEE North American Power Symposium (NAPS), 2020.

High-Frequency Fault Signatures in Microgrids

- Microgrid protection schemes today rely on measuring the AC voltage and current waveforms to calculate the magnitudes and angles to detect faults
- We are also investigating how high-frequency measurements can be used to detect signatures of faults faster

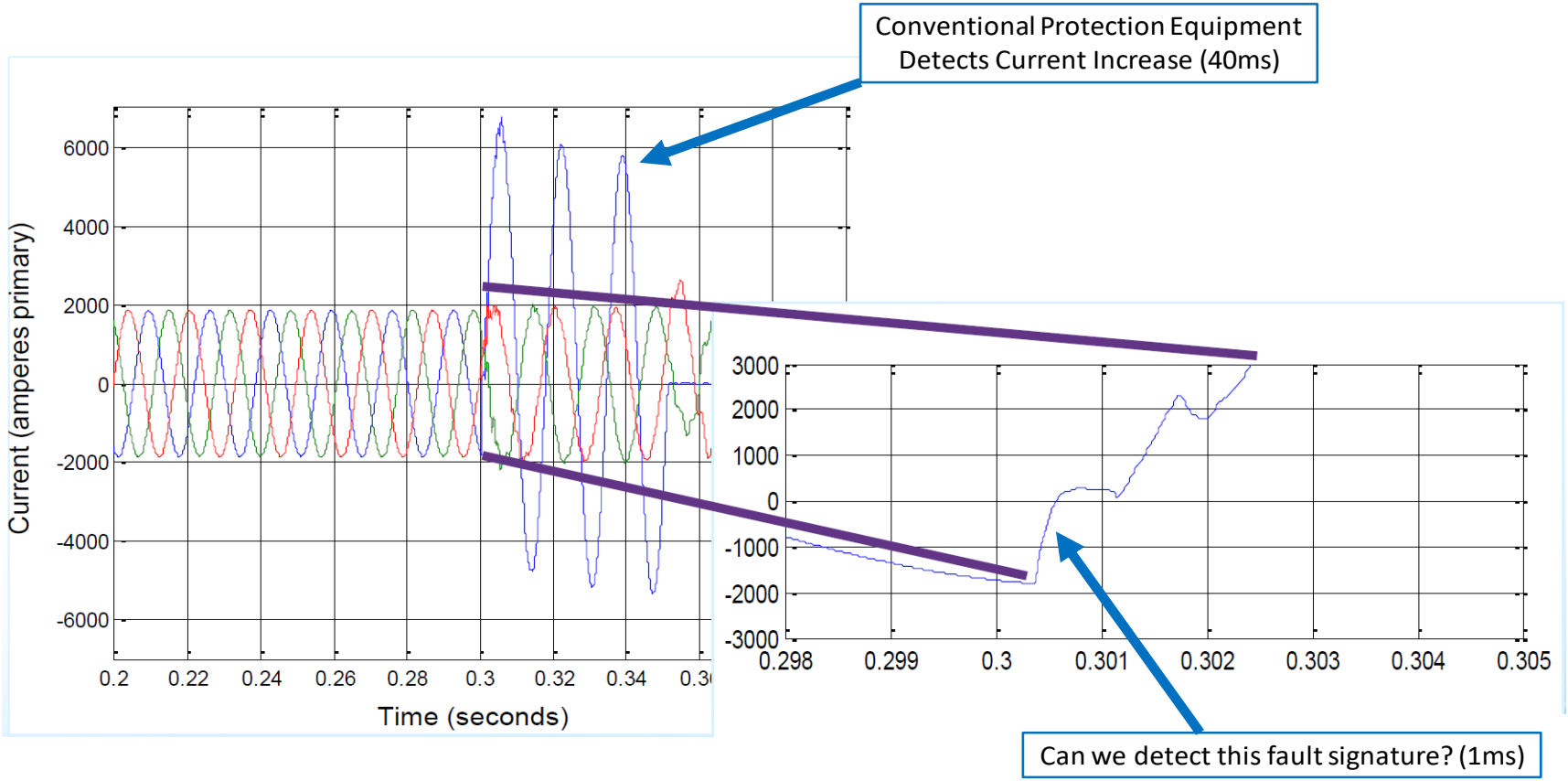

High-Frequency Fault Signatures in Microgrids

- Speed of the fault detection is important for microgrids because of the fast dynamics in low inertia systems
- Detecting fault signatures will also work with inverter-based microgrids since it does not rely on high fault currents
- We are simulating high frequency fault events propagating through distribution system equipment

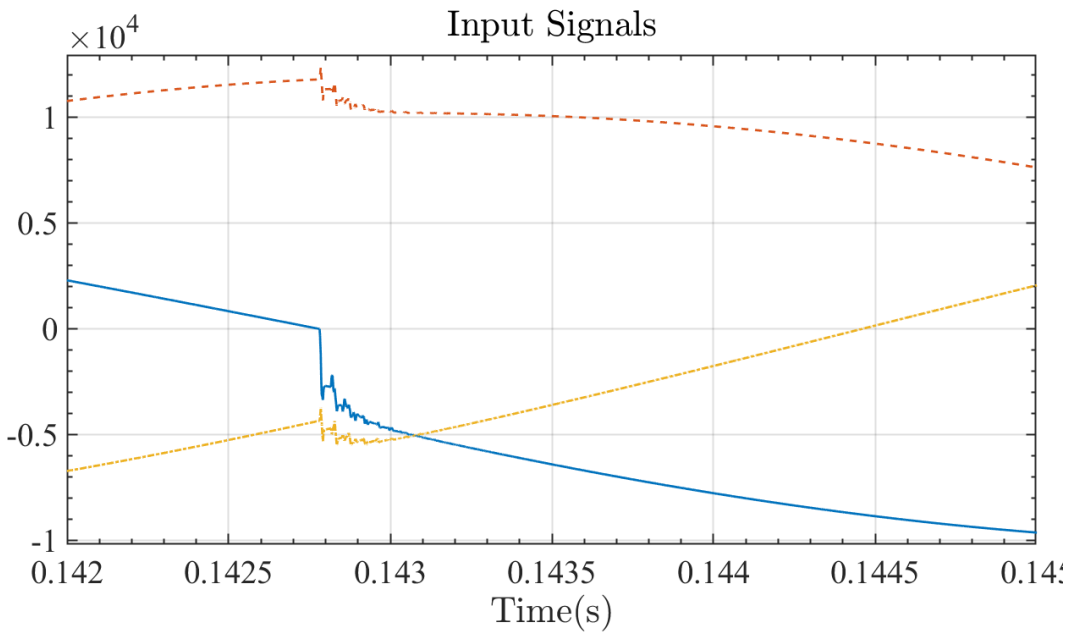

Fault Signature Analysis

- Distinguish fast transients in the raw AC voltage and current waveform measurements using signal processing algorithms to identify faults
- We are investigating several different types of transforms to give precise timing and magnitude of the event
  - Park's Transformation
  - Empirical Mode Decomposition (EMD)
  - Teager-Kaiser Energy Operator
  - Wavelet Transform (Multi-Resolution Analysis)
  - Mathematical Morphology
  - Kalman Filter
  - Koopman Operator
  - Machine Learning (CNN)

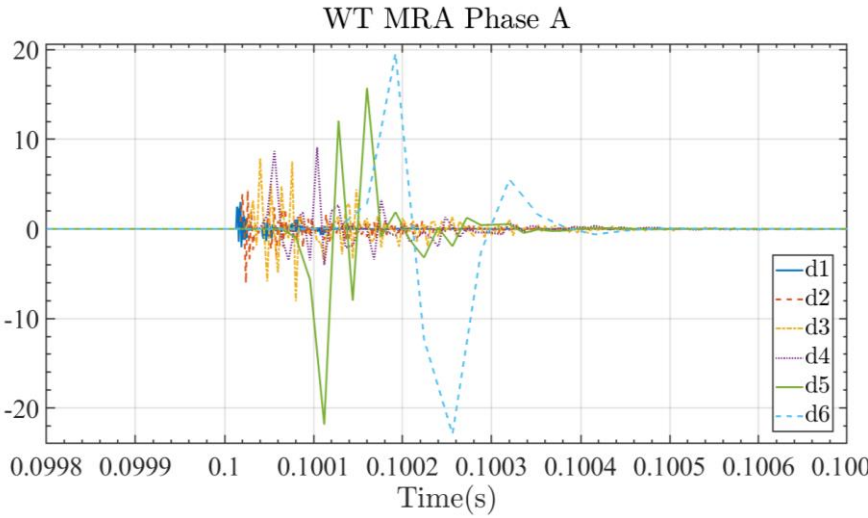

Multiresolution Analysis (MRA)
Mother wavelet: db8
Decomposition level: 6

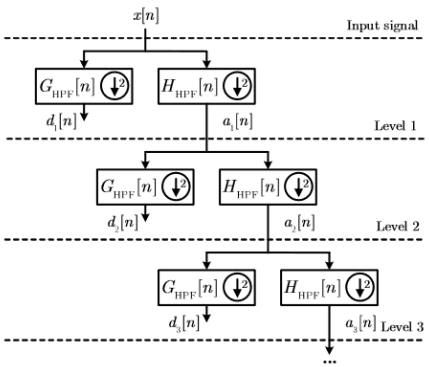

Fault Signature Propagation

- The signal propagates through the microgrid roughly at the speed of light
- If relays are a long ways apart (100 mile transmission line) and you have communication, the fault location can be triangulated back to the source
- 1µs resolution ≈ 270 meter resolution of fault location

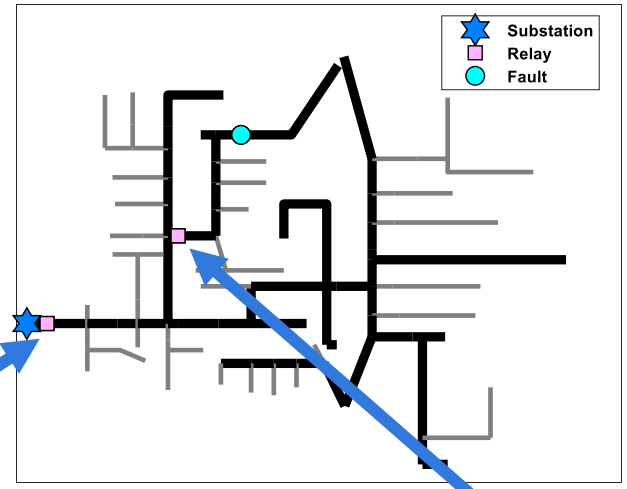

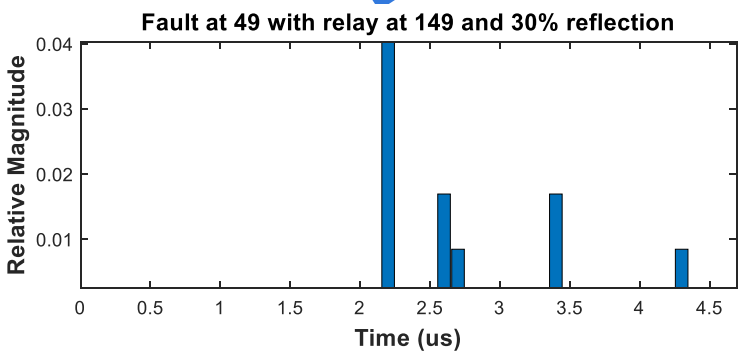

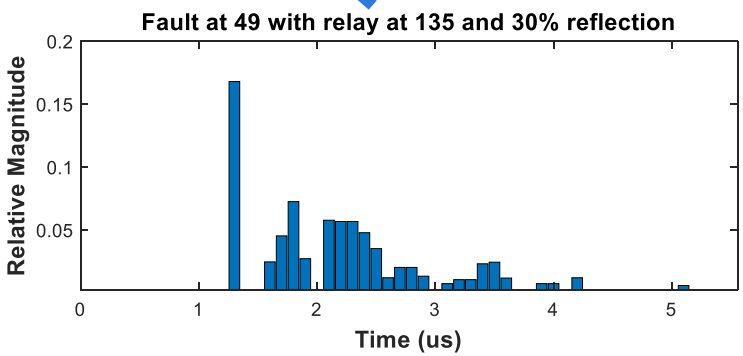

Fault Location in Microgrids

- For overhead lines, the ground mode propagates slower due to the higher ground impedance.
  - This slight difference in aerial and ground mode speed requires much higher resolution with 1 MHz = 1400 meter accuracy
- Multi-resolution analysis (MRA) with discrete wavelet transformation (DWT) is performed on the waveforms. The Parseval energy is calculated from the MRA coefficients.
  - Using 1 MHZ measurements, we have demonstrated 50 meter fault location accuracy

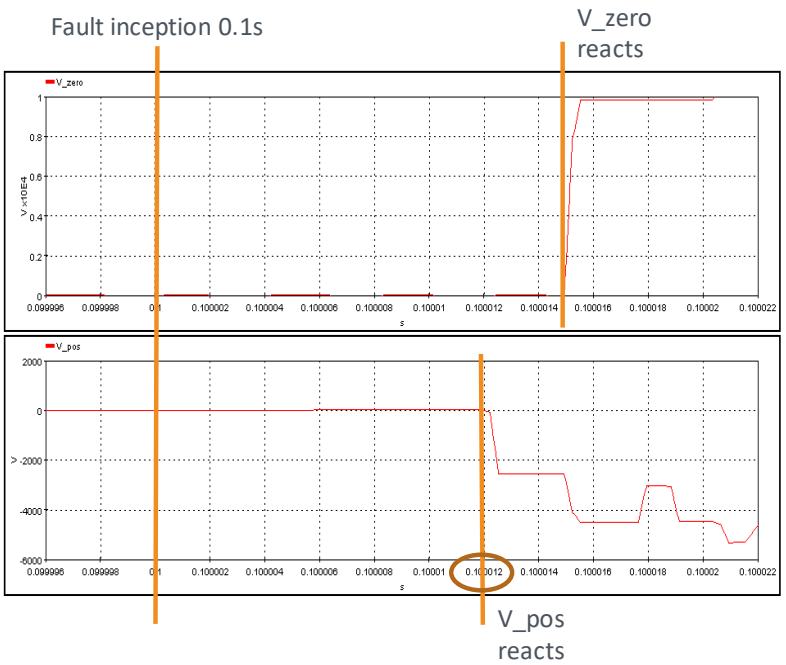

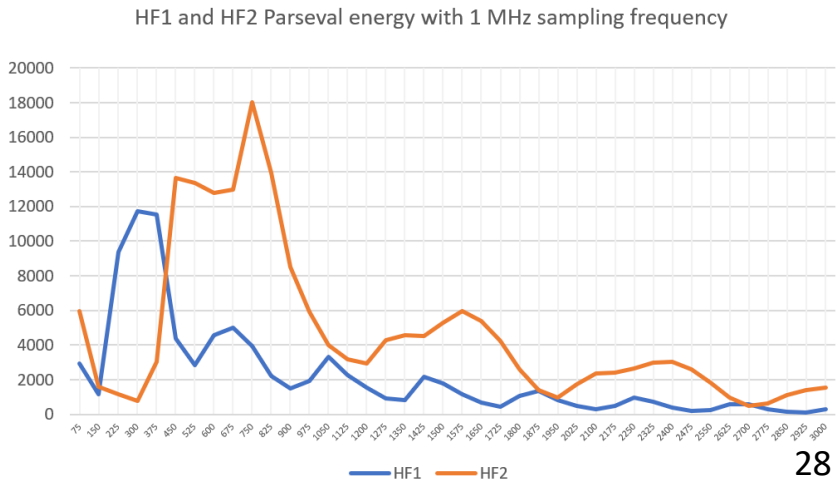

Secondary Network Protection

- Downtown secondary networks present a new set of protection challenges because the meshed low-voltage system is designed to not allow reverse power flow
- Scoping study investigating the challenges and R&D opportunities for protection of secondary networks
  - Impact of DER and microgrids
  - New secondary network protection schemes
  - Communication requirements
  - New monitoring and protective equipment
  - New analysis and design software

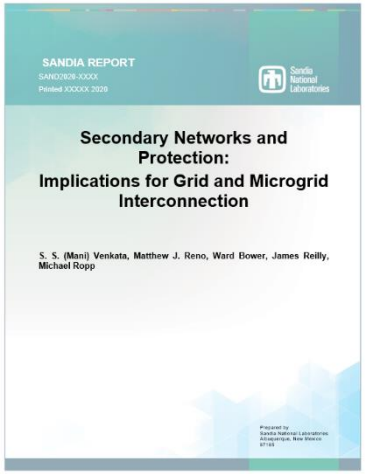

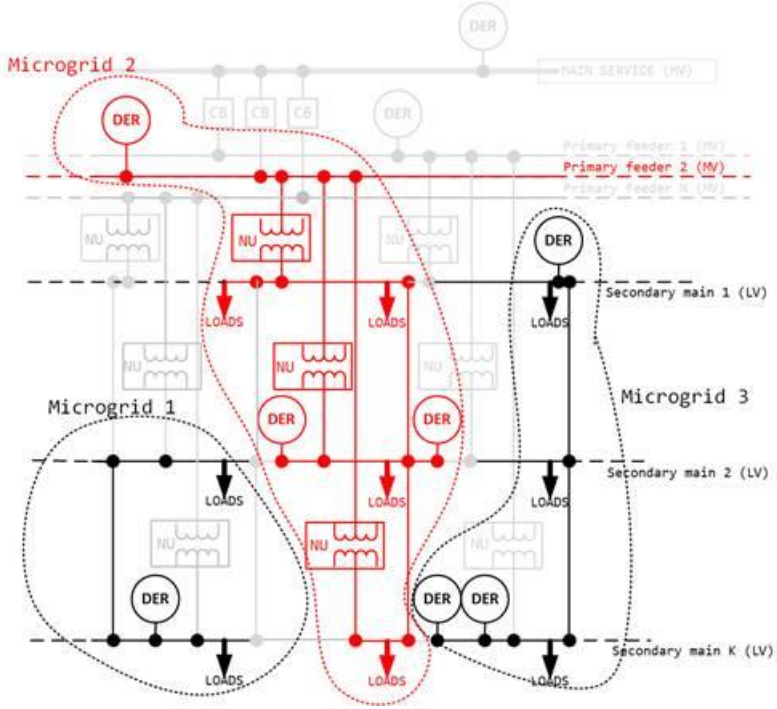

Progress and Results – Milestones

- DOE Microgrid Protection Roadmap:
  - S. S. Venkata, M. J. Reno, W. Bower, S. Manson, J. Reilly and G. W. Sey Jr. "Microgrid Protection: Advancing the State of the Art," Sandia National Laboratories, SAND2019-3167, 2019.
- Holistic approach to address the challenges of distribution system and microgrid protection design under high penetrations of inverter-based DER
  - Detailed inverter modeling based on experimental results
  - Optimal Relay Placement, Relay Type Identification, Optimal Protection Setting Coordination
  - New protection algorithms – including adaptive protection with machine learning and fault signature based algorithms

	Date	Milestone Description
✓	12/31/19	Validated grid-forming inverter models with the ability to simulate mode transitions from grid connected to islanded
✓	03/31/20	Demonstrate integration of additional communication into microgrid protection schemes, such as microgrid controller or inverters.
✓	06/30/20	Intelligent adaptive protection algorithm. Demonstrate ability to distinguish status of breakers and generators in the microgrid without communication.
	09/30/20	Demonstrate high-frequency simulation of faults signatures in microgrids

Schedule for Remainder of FY20 and FY21

- Continue expanding adaptive protection optimizer
  - Including ground current coordination, coordination of reclose sequences (fast and slow curves)
- Develop faster fault detection methods for microgrids based on signal processing of high frequency measurements
  - Including novel sensors for high frequency measurement
- Demonstration of adaptive protection
  - National Grid and PNM
- Framework for co-design of microgrid protection and inverter controls
  - Leveraging Sandia's capabilities in power electronics and energy storage for optimal protection design
- Develop new protection schemes for low-voltage secondary networks
  - Transition microgrid protection research → low-voltage meshed secondaries → future meshed distribution systems → transmission

Project Collaborations and Tech Transfer Activities

Involvement in the **IEEE Power System Relaying Committee (PSRC)** to provide expertise and impact to standards and guides for microgrid protection

- C30 Microgrid Protection has developed a "Microgrid Protection Systems" guide
- C38 working group developing microgrid standards under 2030.12

Collaboration with

- **ORNL** on microgrid fault location
- **UNM** on adaptive protection algorithm
- **NMSU** on developing inverter models
- **Georgia Tech** on fault signature detection
- **Clemson** on real-time simulation of protection
- **SEL** on testing and demonstrating cybersecurity improvements
- **Siemens** on integration of new protection algorithms into CAPE
- **Quanta Technology** on new protection schemes
- **Emera Technologies** on DC microgrid protection demonstration

Demonstrating novel protection schemes on utility distribution systems and microgrids (**PNM**, **National Grid**, **EPB**, **Alaska co-ops**, **CPS**)

Publications - 2019

- "Microgrid Protection Systems" IEEE Power System Relaying and Control Committee C30, Technical Report PES-TR71.

- S. S. Venkata, M. J. Reno, W. Bower, S. Manson, J. Reilly and G. W. Sey Jr. "Microgrid Protection: Advancing the State of the Art," Sandia National Laboratories, SAND2019-3167, 2019.

- R. C. Matthews, M. J. Reno, and A. K. Summers, "A Graph Theory Method for Identification of a Minimum Breakpoint Set for Directional Relay Coordination," *Electronics,* 2019.
- R. Darbali-Zamora, J. Hernandez-Alvidrez, A. Summers, N. S. Gurule, M. J. Reno, and J Johnson, "Distribution Feeder Fault Comparison Utilizing a Real-Time Power Hardware-in-the-Loop Approach for Photovoltaic Systems Applications," IEEE Photovoltaic Specialists Conference (PVSC), 2019.
- J. Hernandez-Alvidrez, A. Summers, M. J. Reno, J. Flicker, N. Pragallapati "Simulation of Grid-Forming Inverters Dynamic Models using a Power Hardware-in-the-Loop Testbed," IEEE Photovoltaic Specialists Conference (PVSC), 2019.
- R. C. Matthews, S. Hossain-McKenzie, and M. J. Reno, "Fault Current Correction Strategies for Effective Fault Location in Inverter-Based Systems," IEEE Photovoltaic Specialists Conference (PVSC), 2019.
- N. S. Gurule, J. Hernandez-Alvidrez, M. J. Reno, A. Summers, S. Gonzalez, and J. Flicker, "Grid-forming Inverter Experimental Testing of Fault Current Contributions," IEEE Photovoltaic Specialists Conference (PVSC), 2019.
- A. Summers, J. Hernandez-Alvidrez, R. Darbali-Zamora, M. J. Reno, J. Johnson, and N. S. Gurule, "Comparison of Ideal Transformer Method and Damping Impedance Method for PV Power-Hardware-In-The-Loop Experiments," IEEE Photovoltaic Specialists Conference (PVSC), 2019.
- P. H. Gadde and S. Brahma, "Realistic Microgrid Test Bed for Protection and Resiliency Studies," North American Power Symposium (NAPS), 2019.

Publications - 2020

- S. Augustine, M. J. Reno, S. M. Brahma, and O. Lavrova, “Fault Detection and Current Control for a Standalone DC Microgrid Using Current Derivative and Adaptive Droop,” Journal of Emerging and Selected Topics in Power Electronics, 2020.
- B. Reimer, T. Khalili, A Bidram, M. J. Reno, and R. C. Matthews, “Optimal Protection Relay Placement in Microgrids,” IEEE Kansas Power and Energy Conference (KPEC), 2020.
- T. Patel, S. Brahma, J. Hernandez-Alvidrez, and M. J. Reno, “Adaptive Protection Scheme for a Real-World Microgrid with 100% Inverter-Based Resources,” IEEE Kansas Power and Energy Conference (KPEC), 2020.
- D. Sikeridis, A. Bidram, M. Devetsikiotis, and M. J. Reno, "A Blockchain-Based Mechanism for Secure Data Exchange in Smart Grid Protection Systems," IEEE Consumer Communications & Networking Conference (CCNC), 2020.
- J. Hernandez-Alvidrez, N. S. Gurule, M. J. Reno, J. D. Flicker, A. Summers, and A. Ellis " Method to Interface Grid-Forming Inverters into Power Hardware in the Loop Setups," IEEE Photovoltaic Specialists Conference (PVSC), 2020.
- R. Darbali-Zamora, J. Johnson, M. J. Reno, and N. S. Gurule, “Evaluation of Photovoltaic Inverters Under Balanced and Unbalanced Voltage Phase Angle Jump Conditions,” IEEE Photovoltaic Specialists Conference (PVSC), 2020.
- N. S. Gurule, J. Hernandez-Alvidrez, R. Darbali-Zamora, M. J. Reno, and J. D. Flicker, “Experimental Evaluation of Grid-Forming Inverters Under Unbalanced and Fault Conditions,” IEEE Industrial Electronics Conference (IECON), 2020.
- R. C. Matthews, A. Summers, and M. J. Reno, “An Algorithm for Placement of Directional and Nondirectional Time-Overcurrent Relays in a Fully Protected Network,” IEEE PES General Meeting, 2020.
- B. Poudel, A. Bidram, and M. J. Reno, “Circuit Topology Estimation in an Adaptive Protection System,” IEEE North American Power Symposium (NAPS), 2020.

Conclusions

- Protection is one of the key challenges for microgrids (and future meshed systems with high penetrations of inverter-based generation) that will have significant impact on the reliability/resilience of the grid of the future
- The range of academic, industry, consultants, developers, and utility partners on the project provide broader solutions to addressing these challenges and developing new protection algorithms
- Developing new modeling and new microgrid protection schemes that will yield insights into local and wide area relaying philosophy with complimentary hybrid protection systems that are more resilient
- Advancements are being demonstrated with utility partners and integrated in IEEE standards

QUESTIONS?

Sandia National Laboratories
Matthew J. Reno
mjreno@sandia.gov
505-844-3087