OPAL-RT TECHNOLOGIES

FROM IMAGINATION TO REAL-TIME

3rd Annual International Workshop on

Grid Simulator Testing of Energy Systems and Wind Turbine Powertrains

Session 5: Cyber Physical System

Challenges and Solutions for Large and Smart Transmission, Distribution and Microgrid Emulation

Jean Belanger CEO & CTO

Hosted by: The Florida State University Center for Advanced Power Systems
2000 Levy Ave. Tallahassee FL, 32310, Nov. 5th and 6th

OPAL-RT TECHNOLOGIES

OPAL-RT in Brief

Real-time HIL Simulators for all Industries

- **Founded in 1997**
- **About 130 + employees worldwide**
- **More than 500 customers**
  - **200 universities**
  - **and 300 industrial and R&D organisations**
- **20% of turnover reinvested in R&D**

- **30% revenue from America,**
  40% Asia and 30% Europe
- **25% revenue growth since 2010**
- **Strong collaboration with innovative**
- **customers and partners**

OPAL-RT TECHNOLOGIES

MAIN PRODUCTS AND SERVICES

- **mechatronic HIL Simulators (> 100 us)**
  - Auto, aero, robotic and power grids
- **Fast Real-Time HIL Simulators (100 nanos to 100 micros)**
  - Power Systems: transmission and distribution
  - Micro grids, distributed generation … Wide area control and protection
  - Power Electronics in all markets
    - Electric vehicles, More electrical aircraft, trains, ships, industrial drives,
    - HVDV, MMC, FACTS , fast protection systems
- **Rapid Control Prototyping Systems**
- **Dynamic Instruments**
  - Generator Speed Governor Testing (BERTA)
  - Nuclear generator controller testing
  - Other to come
- **Real-time co-simulation tools**
- **Fast parallel simulation for SIL**
  (Software in the loop)
- **Studies, Testing and Integration services**

Real-time HIL Simulators of any size

XILINX ZYNQ ARM cpu and FPGA

OP4200

NI cRIO

INTEL MULTI-CORE SHARED MEMORY COMPUTERS

OP4500

OP5600

OP7000

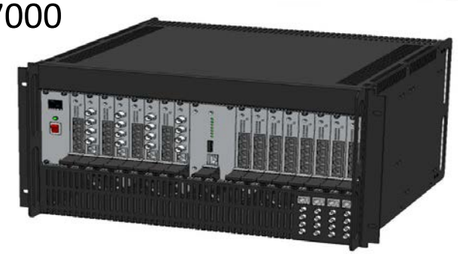

SGI Super computer
HIL Simulator

PC / FPGA based HIL Simulator

OPAL-RT TECHNOLOGIES

OPAL-RT provides simulator to all industries but with a focus on aplication integrating power electronic sub-systems

- Industrial and Utilities **– 70%**
  - Aerospace, Civil Aircraft, Robotic
  - Automobile, Off-highway and Military vehicles
  - Electrical Ships, more electrical aircraft, electrical trains

  - Industrial Equipment: AC-Fed Multi-Drives systems
  - Utilities and equipment manufacturers
    - Transmission , generation and distribution
    - Micro-grids and renewable (wind, PVs …)
    - HVDC, FACTS, HVDC MMC Grids
    - Protections, PMUs, wide area controls

- Academic and Education – **30 %**

80% of projects are related to power electronic and power grids

20% of projects are related to slow mechatronic systems simulation, testing and system integration

Large growth of HIL use by universities, R&D centers and industries since the last 10 yeasrs

OPAL-RT TECHNOLOGIES

OPAL-RT in Brief – Global Presence

HQ in Montreal, Canada (100+)

5 Subsidiaries and technical support centers:
Detroit and California, Paris, Beijing, Bangalore
(4 pers) (10) (5) (12)

- **Large Integrator and Distributor Network**

China, Japan, Korea, Russia, Taiwan, Singapore,
Brazil, Chili

New Trends
In Power Grids
and Power Electronics

requiring
large and fast power systems simulators
integrated with local controllers/protection
and wide-area control and protection
over complex communication systems

OPAL-RT TECHNOLOGIES

Large Integrated MMC Simulators – Analog IOs

Delivered in 2011 to ABB (Switzerland) and NARI Relay (China)

- **MMC Simulator**

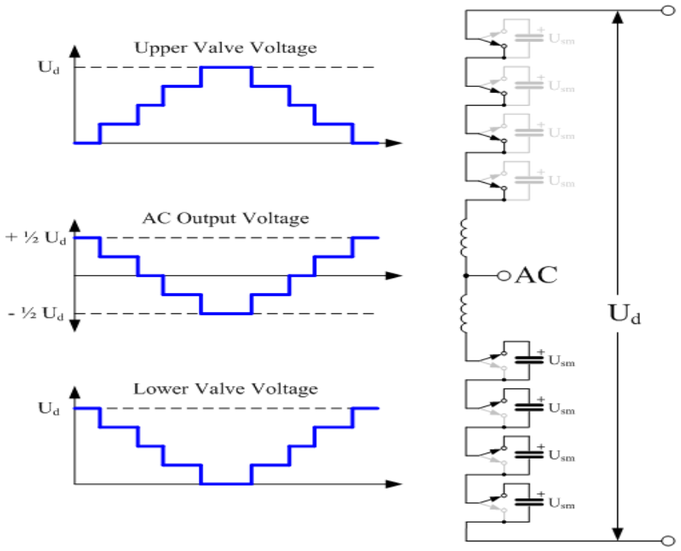

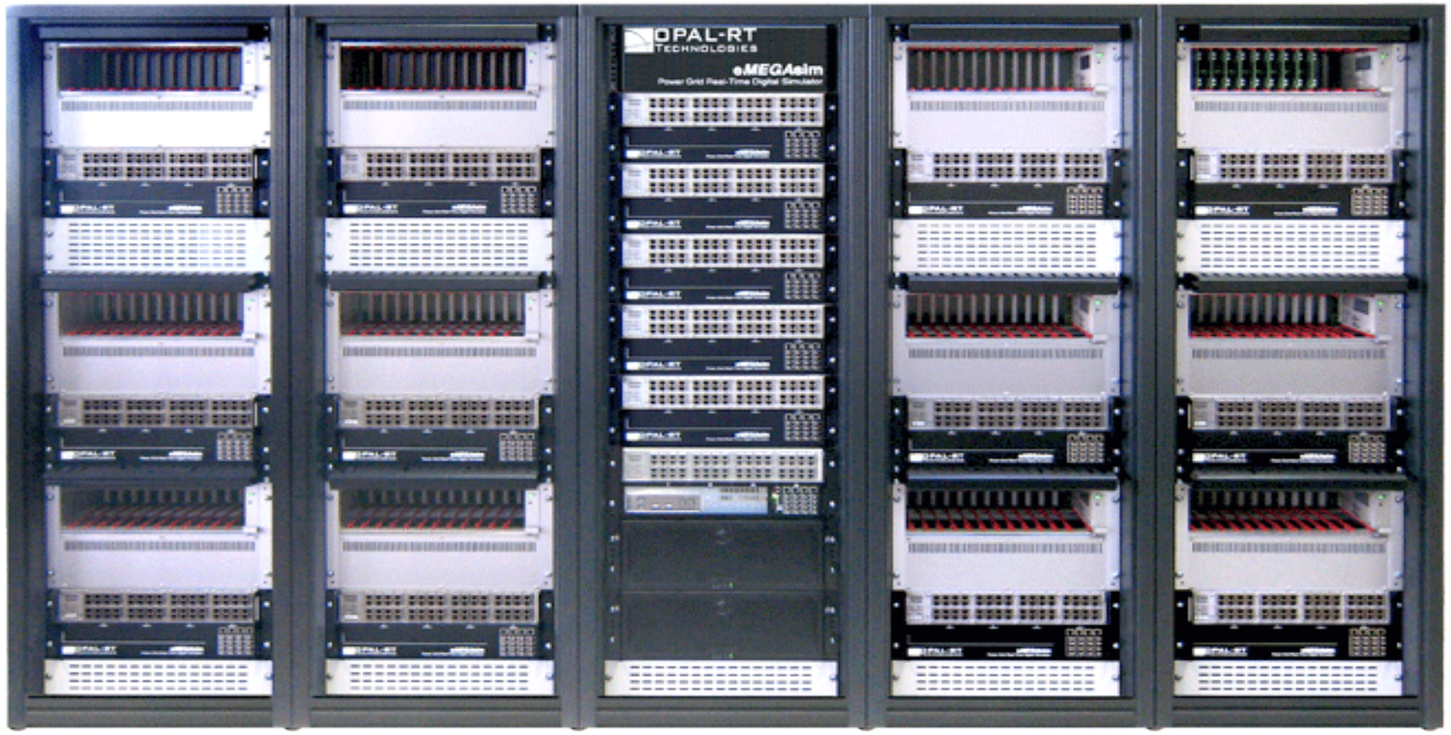

- **More than 3000 I/O signals**
- **Model time step: 25 microseconds !**

OPAL-RT TECHNOLOGIES

MMC Control under test

HYPERSIM
Digital Real-Time Simulator

Several
hundreds of signals

MMC HVDC
Control Replica
under test

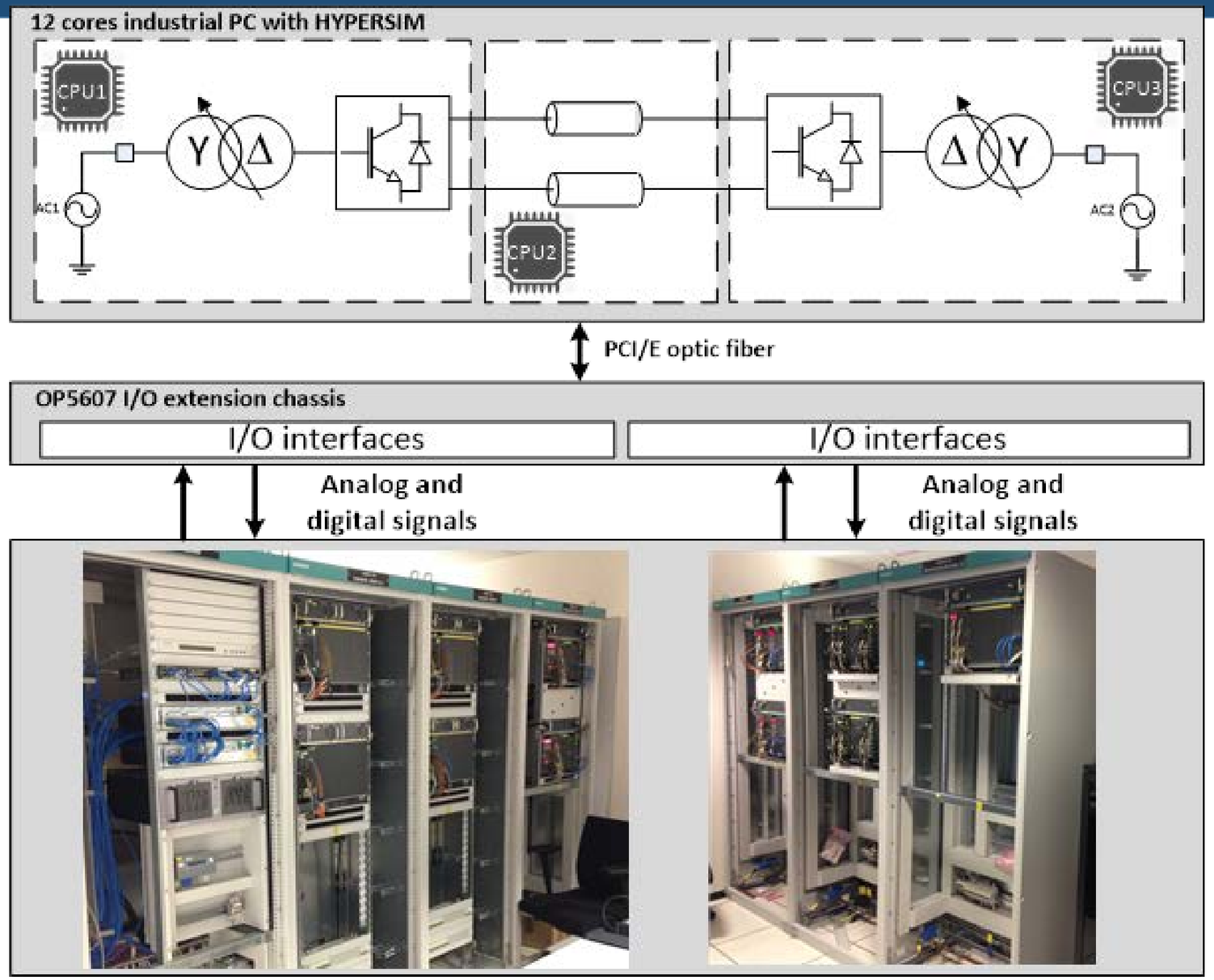

Courtesy of RTE-France

MMC DC Grid (China project with 10 VIRTEX7 FPGA)

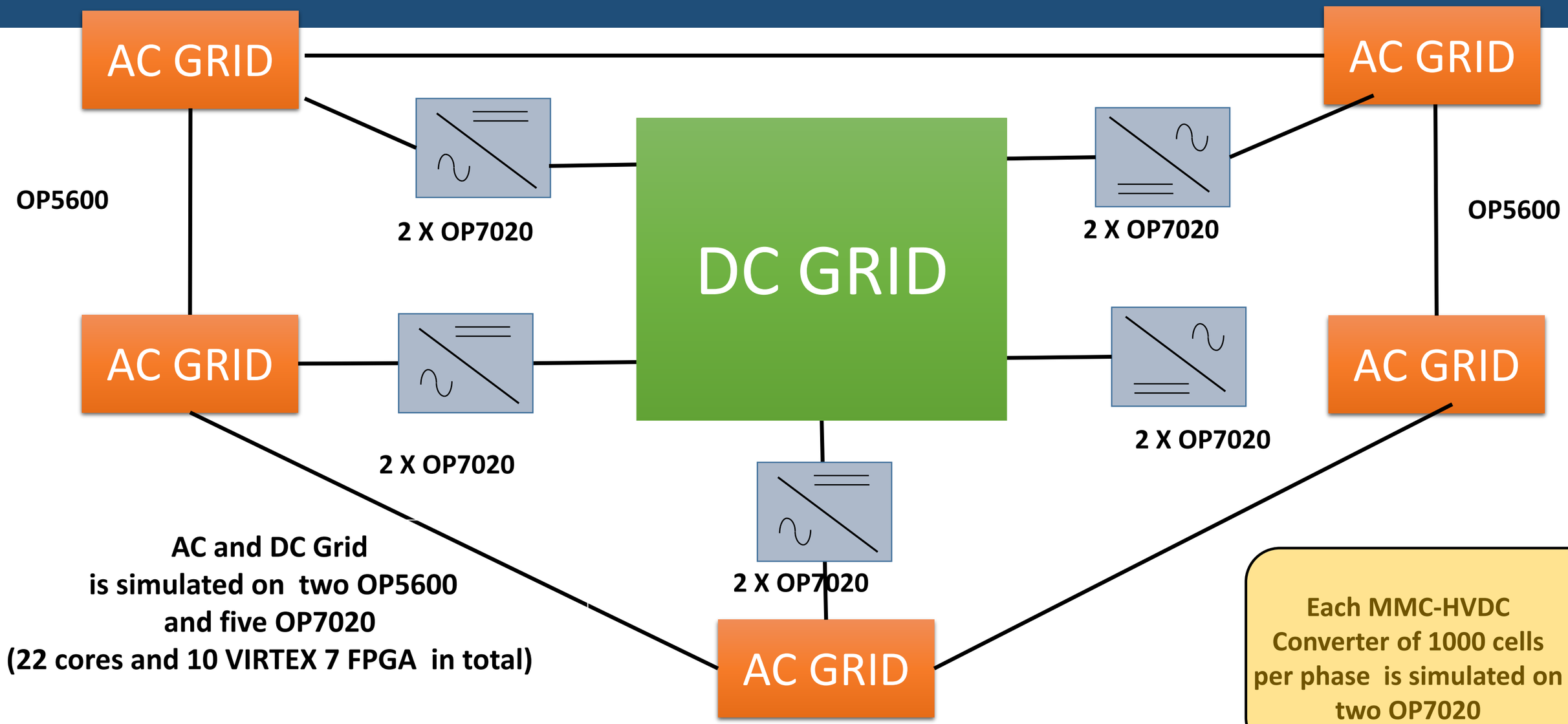

AC and DC Grid
is simulated on two OP5600
and five OP7020
(22 cores and 10 VIRTEX 7 FPGA in total)

Each MMC-HVDC
Converter of 1000 cells
per phase is simulated on
two OP7020

OPAL-RT TECHNOLOGIES

16,000 detailled cells simulated in 500 nanoseconds

Large OPAL-RT MMC delivered in China (2012-2014))

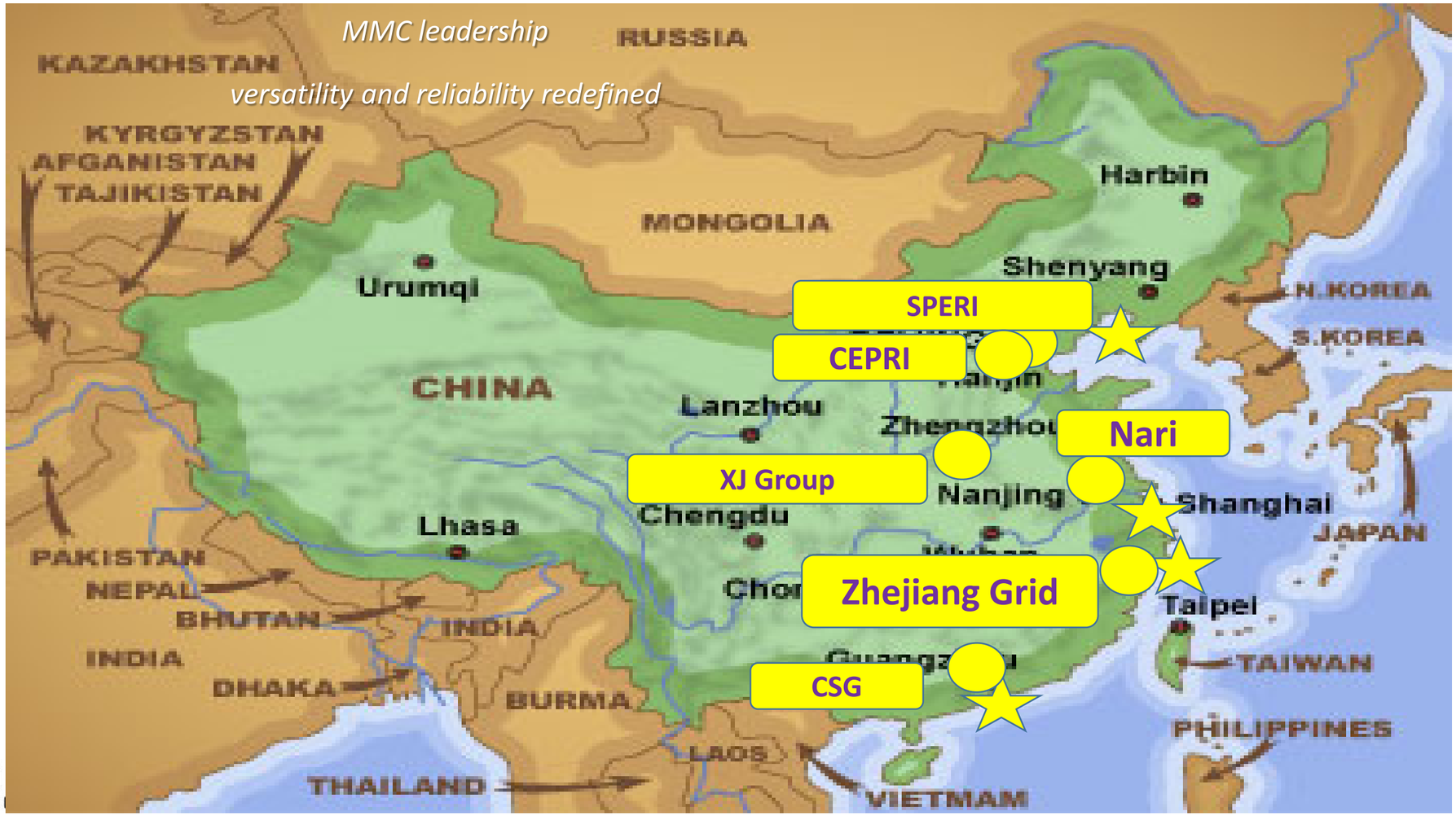

MMC Project

eMEGAsim installed at MMC manuafacturer

Power Grid Complexity is Evolving Very Rapidly

- From copper/steel/Aluminum
- to power electronic and fast controllers and protections
- To communication
- to software
- **To ensure performance and security at minimum cost**

OPAL-RT TECHNOLOGIES

Modern AC/DC SMART Power system transmission

challenges : optimizing controls, protection
to increase performance and reliability at minimum cost
with minimum environmental impacts

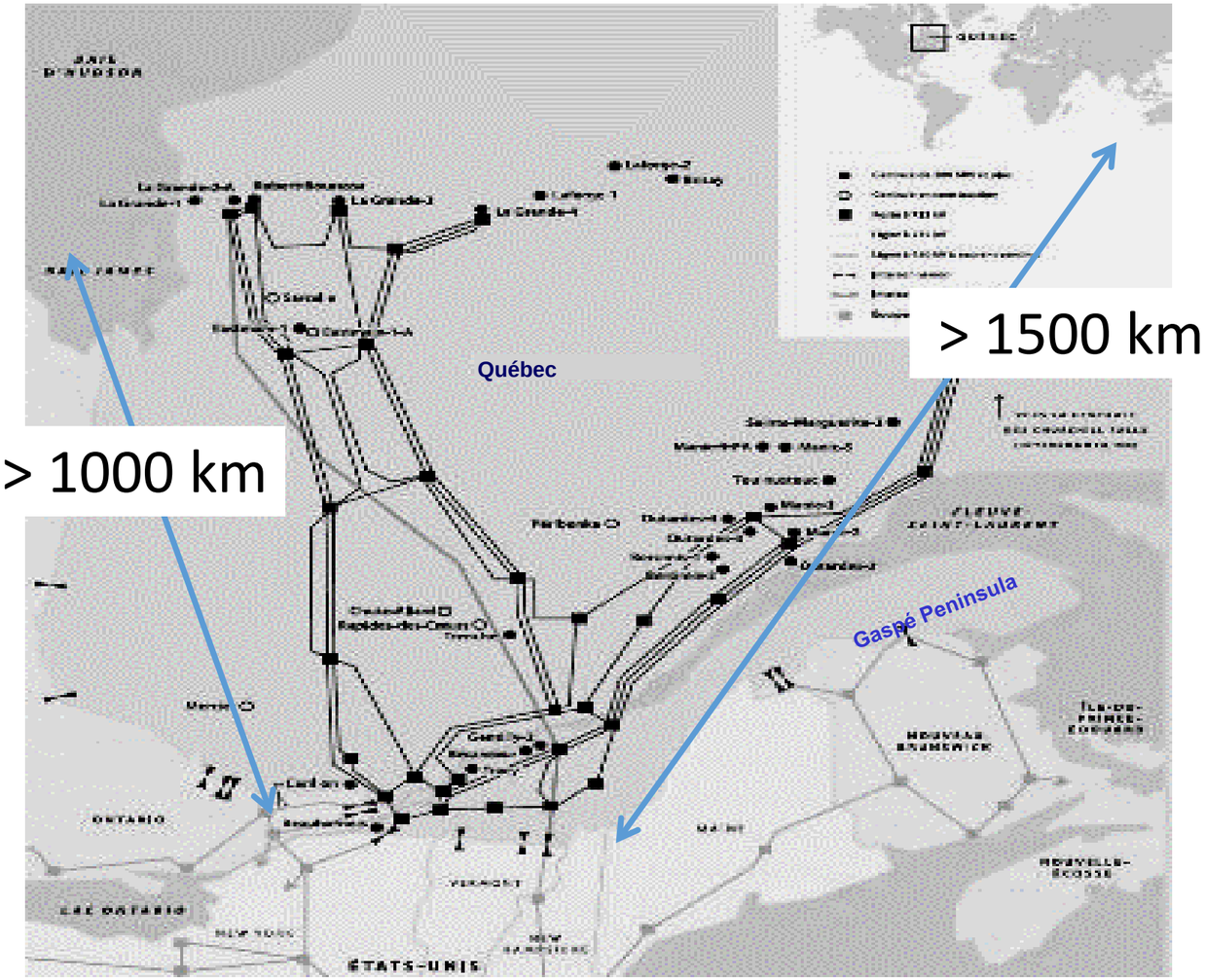

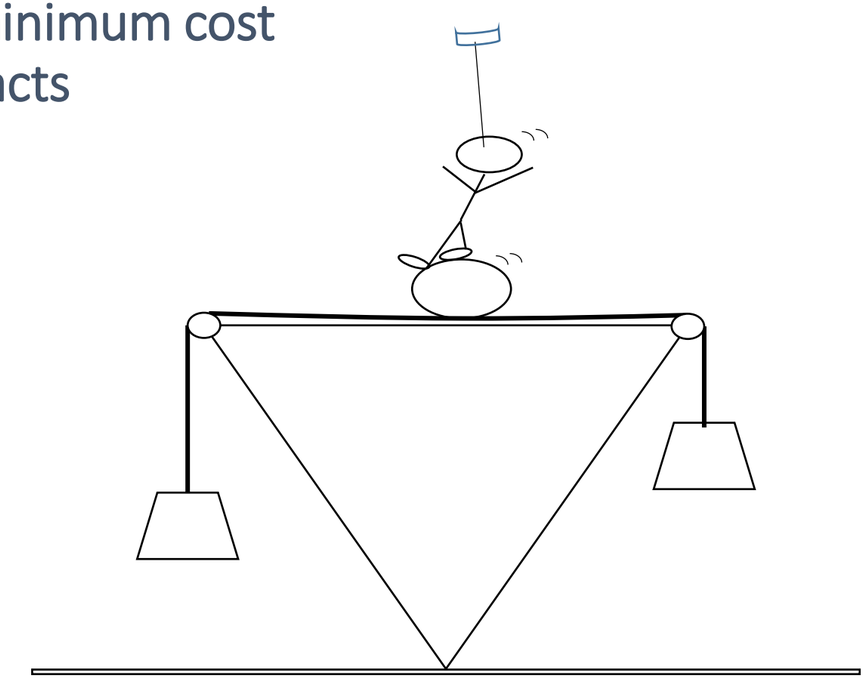

- Fast machine AVR and PSS
- SVC and FACTS
- HVDC transmission and interconnections
- Fast local protection and automatic systems
- wide area special control and protection (SPS)
- Sophisticated communication systems and protocols

OPAL-RT TECHNOLOGIES

Evolution of Distribution Systems : from passive to SMART Active Distribution Systems and Micro-Grids with distributed generation

- ➔ **Becoming as complex as transmission systems**
- ➔ **Security and performance relies on more complex controls, protection and communication systems**
- ➔ **Design and Testing an integrated system interconnected with the main grid becomes a challenges**

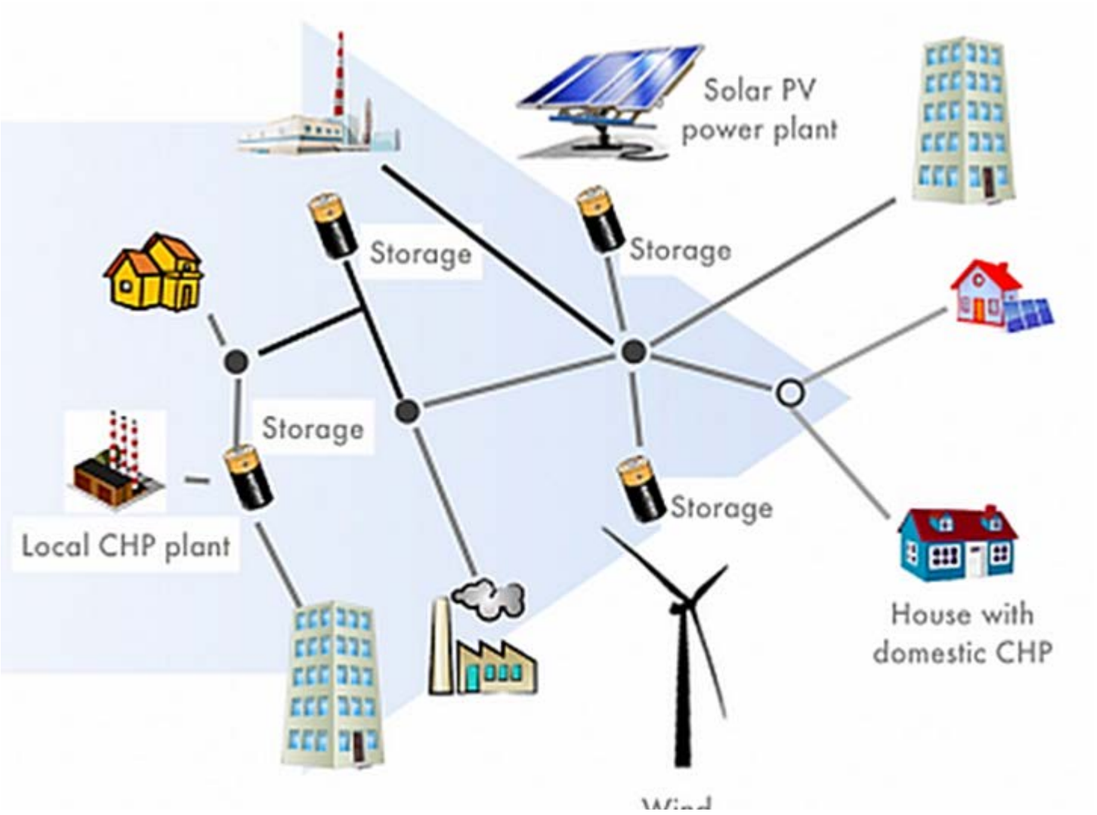

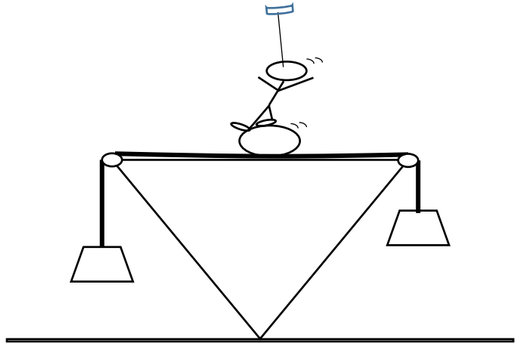

- ❖Renewable energy systems (solar, wind, etc) are less predictable
- ❖Use of power electronics, fast protection system
- ❖Use of wide area control and protection systems (SPS)
- ❖Sophisticated communication systems and protocols

OPAL-RT TECHNOLOGIES

Integrated SMART Transmission and Distribution Power Systems and distributed generation

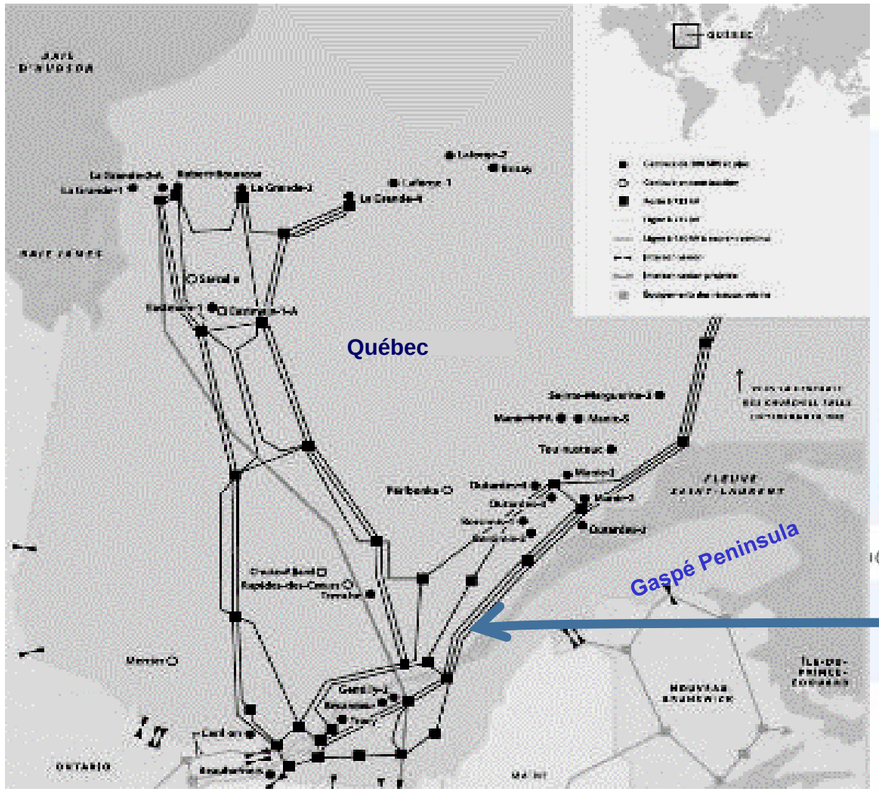

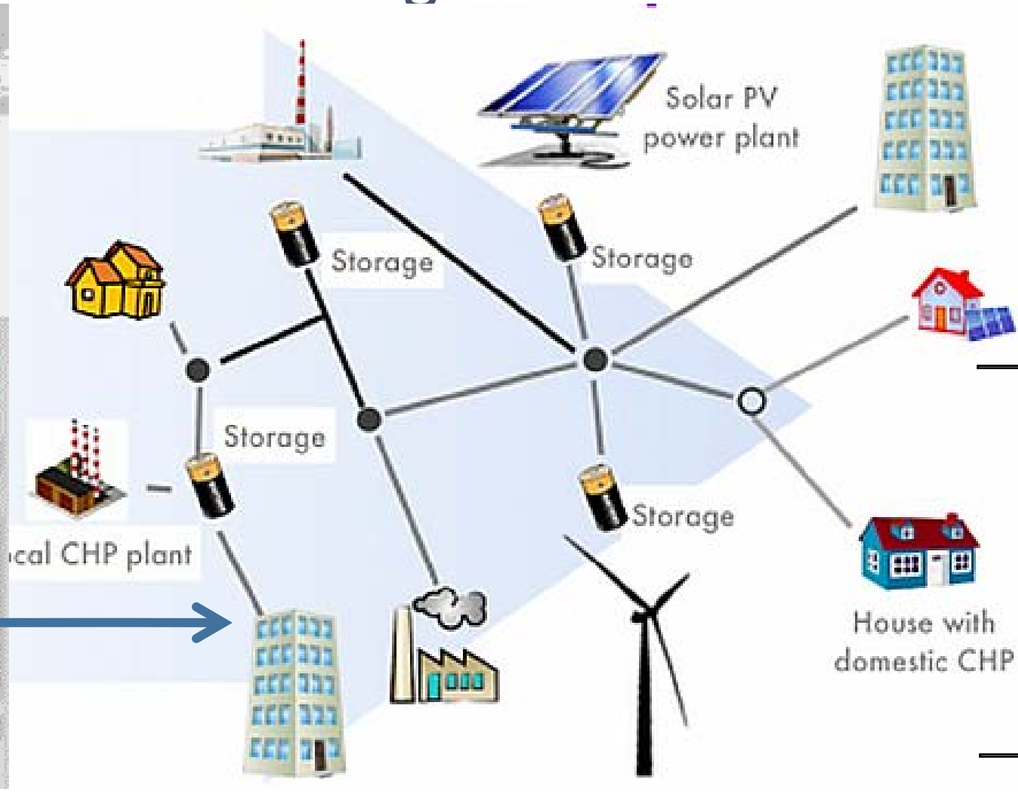

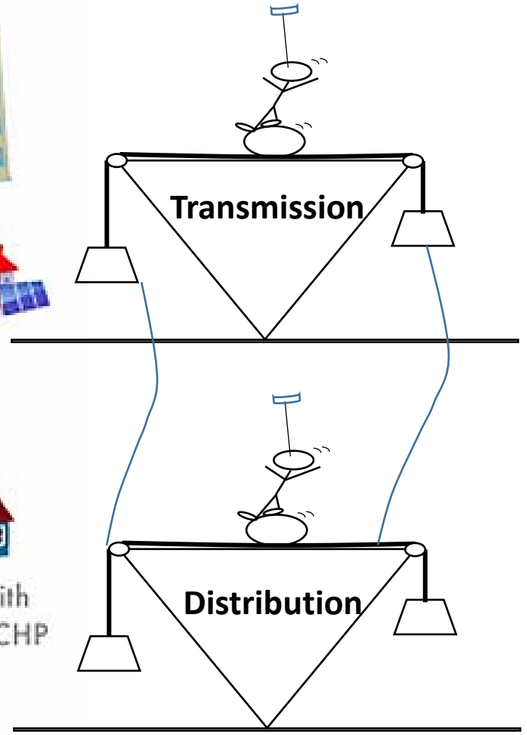

❖ Power electronics for HVDCs, FACTS, fast protection

❖ Fast power electronic for renewable energy systems (solar, wind, etc)

❖ Control co-ordination challenges

➔ Security and performance will rely on more complex global wide area control, protection and communication systems

➔ Large-scale real-time simulators will become even more essential than today!

OPAL-RT TECHNOLOGIES

Integrated Multi-Domain Multi-Rate Real-Time Co-Simulation

Other tools
and Laboratory
(LabVIEW-RT,
STATEMATE …)

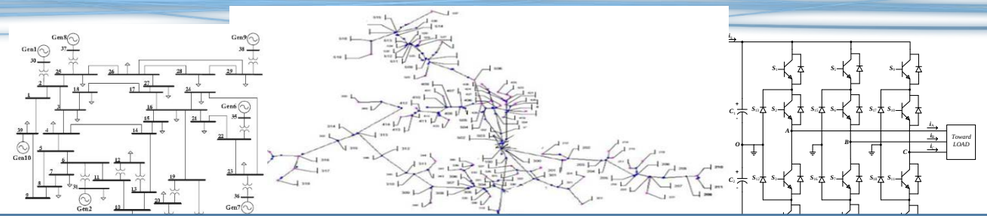

Simulated GRID :EMT & PHASOR modes (MIL, HIL)
(HYPERSIM, ePHASORsim, ,eMEGAsim SPS, SSN, eFPGAsim, MODELICA, SIMSCAPE …)

Simulated
Telecommunication
I.e: OPNET

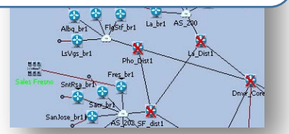

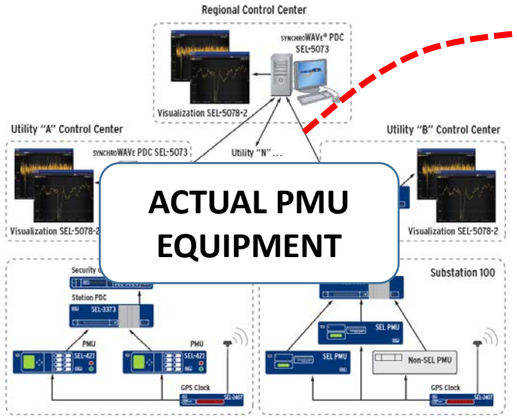

ACTUAL PMU EQUIPMENT

RT-LAB
Co-
Simulation
FrameWork

Actual Control and protection Equipments (HIL)
(HVDC, FACTS, DRIVE …

GUI
(RTDMS, ETAP, RT-LAB)

I/O Channels
(V and I meas.)

Wide Area
Controller

MATAB,
SIMULINK,
MODELICA …

Power Amplifier for PHIL

Actual Equipments
Wind turbine
PV, Storage, loads …

Challenges:
1) How to manage large number of signals between models
2) Model synchronisation and data logging …

OPAL-RT TECHNOLOGIES

Example: Micro-Grid Real-Time Digital Simulation - Power electronic loads, generation integrated with large distribution systems

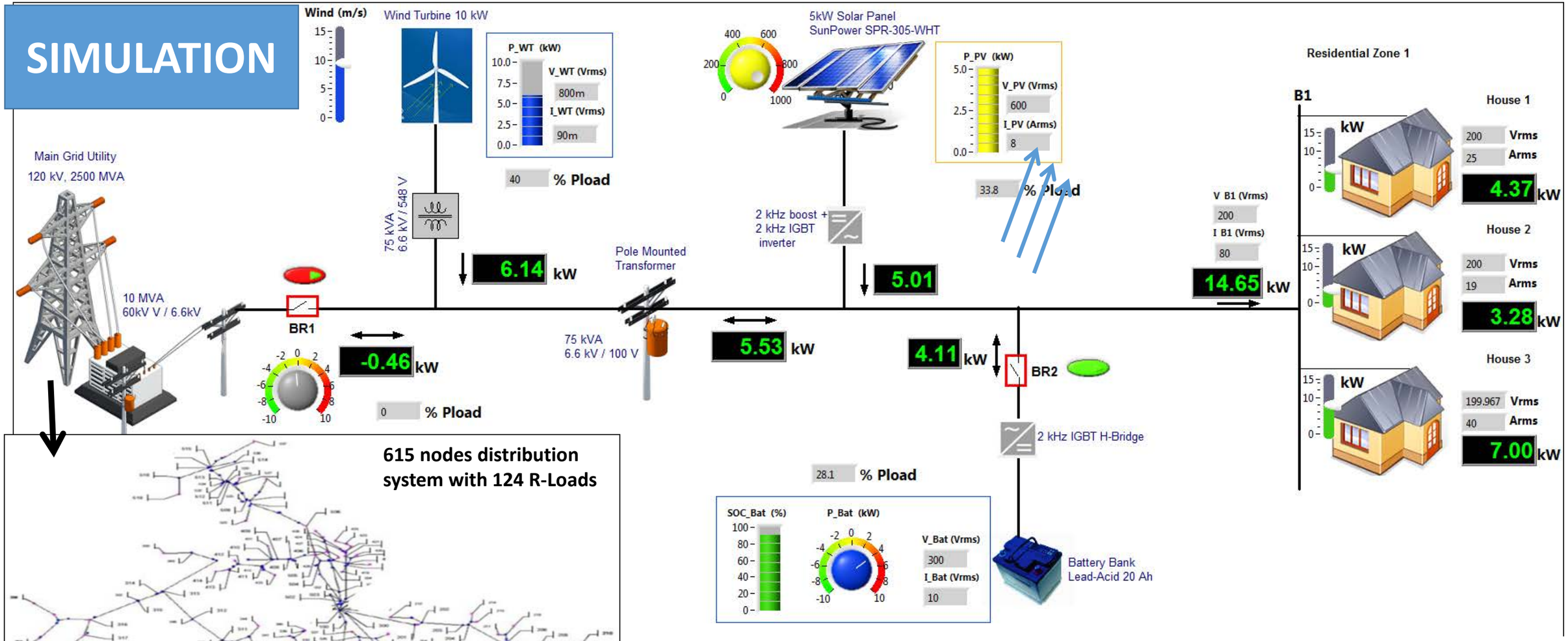

Distribution systems are becoming active:
Performance and security depend on controls , power electronics and communication
Dynamic performance analysis become as complex as transmission systems

Solver Challenges for distribution systems and microg rids: Short-Line, very Fast Phemena and Scalability

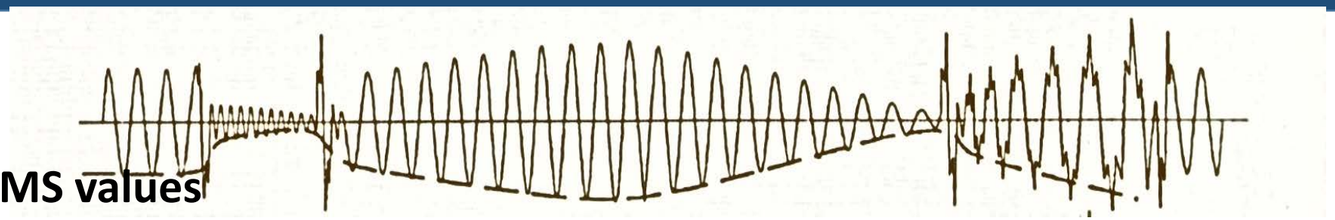

RMS values

Full waveforms with fast transients (EMT)

Distribution systems:

1) Short line sections
2) Several number of nodes (R, L, C elements) increases matrix size, which increase processing time above the specified time step
3) Difficult to use parallel processing to decrease time step value
4) Several breaker models are needed

Solutions:

1) More complex solvers (SSN) capable to compute more than 1200 states within 100 micros with 4 CPU
2) Use faster CPU as they become available
3) Use FPGA as they become larger and easier to program (eHS)
4) Use Phasor-mode simulation when fast transient simulation is not needed (ePHASORsim can now simulate about 15,000 to 40,000 nodes at 10 millis using 1 to 10 processors)
5) Use hybrid Phasor-EMT using CPU and FPGA

OPAL-RT TECHNOLOGIES

Challenge for real-time simulation of Micro-Grids : very slow transients, fast and ultrafast transients must be simulated simultaneously

Wind Turbine Dynamics: 24-Hours

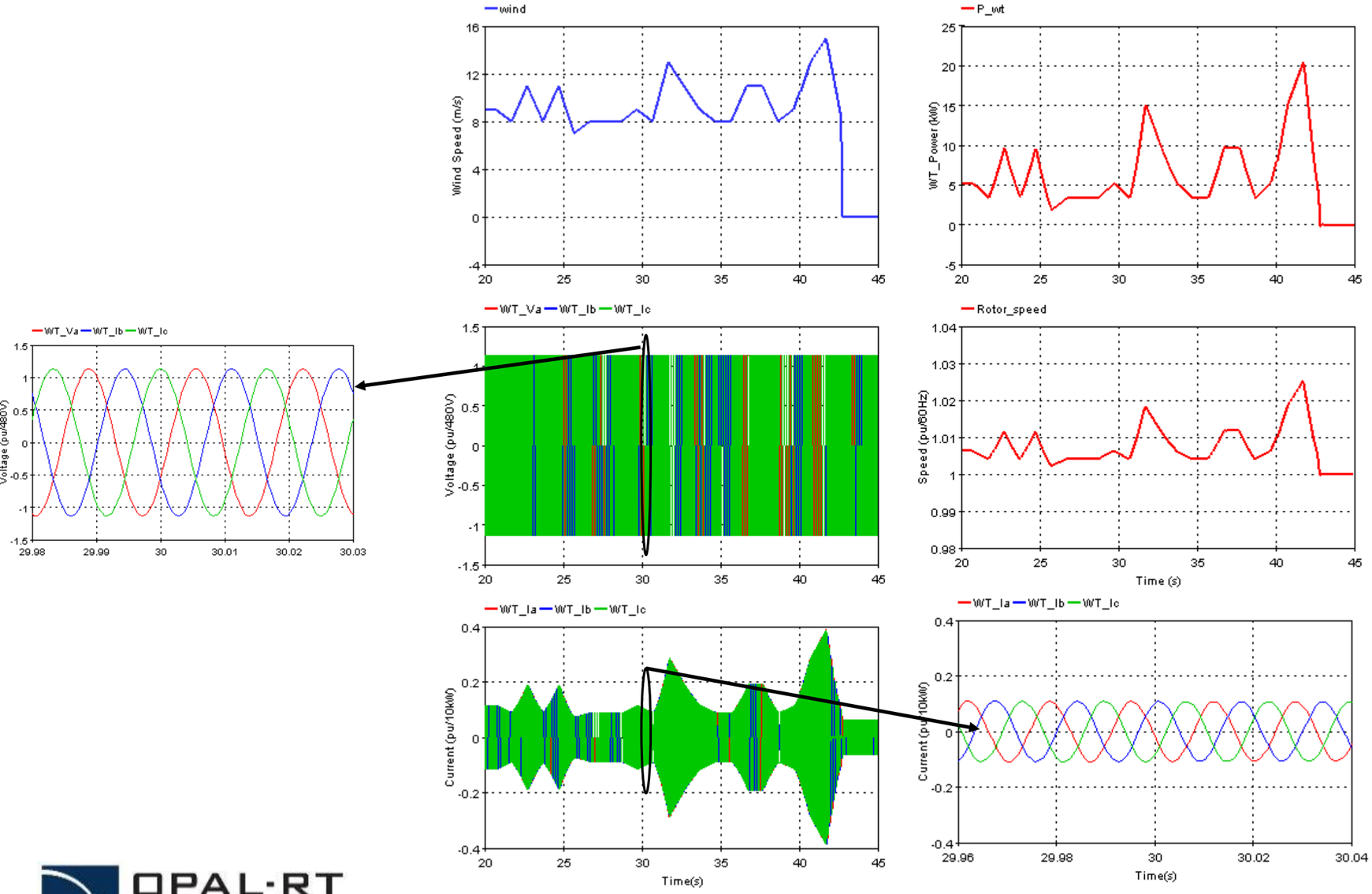

Play 24-Hours Wind Profile

OPAL-RT TECHNOLOGIES

Micro-Grid Real-Time Digital Simulation: Fast EMT Transients

Play AB-to ground faults

Transient Analysis : AB-to ground faults

AB-G ground faults Closed to the Microgrid

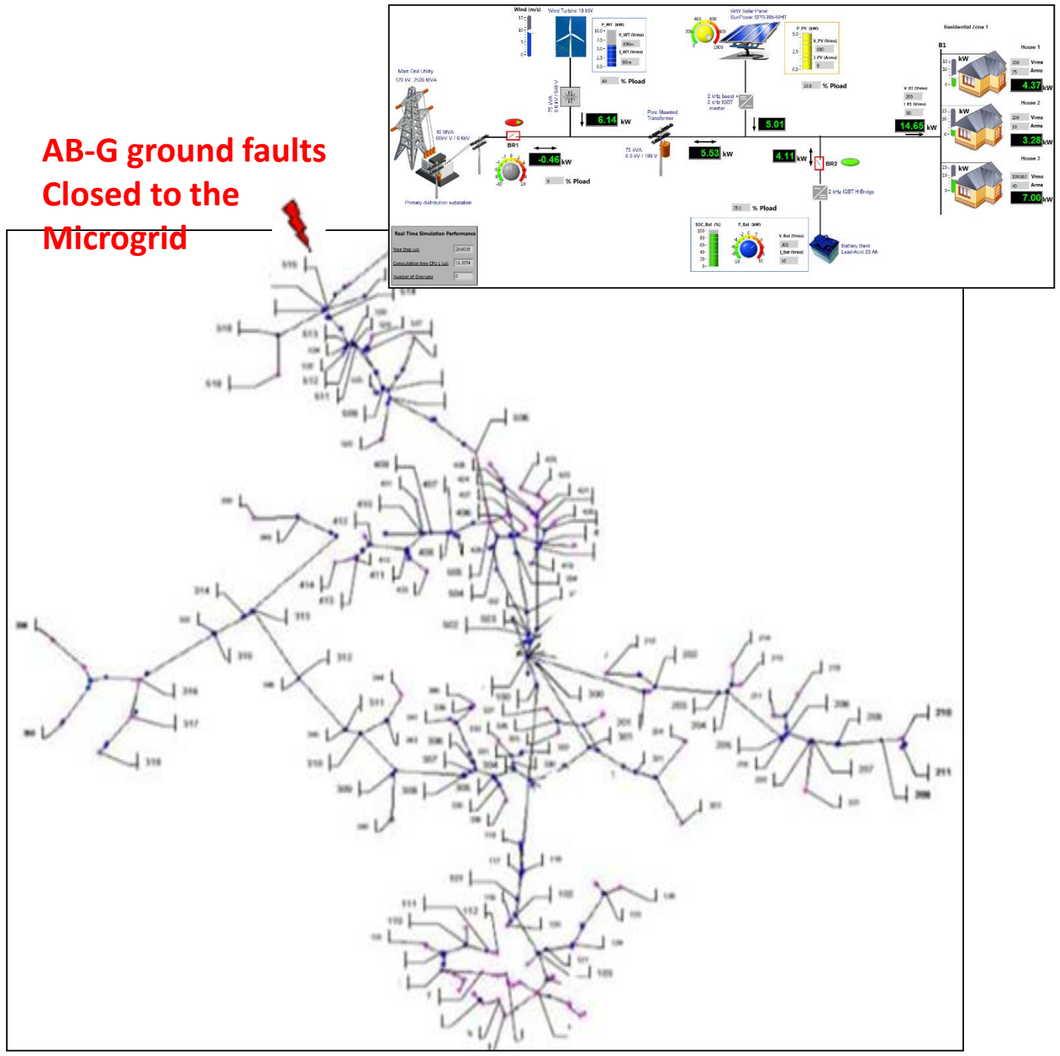

V-I Network

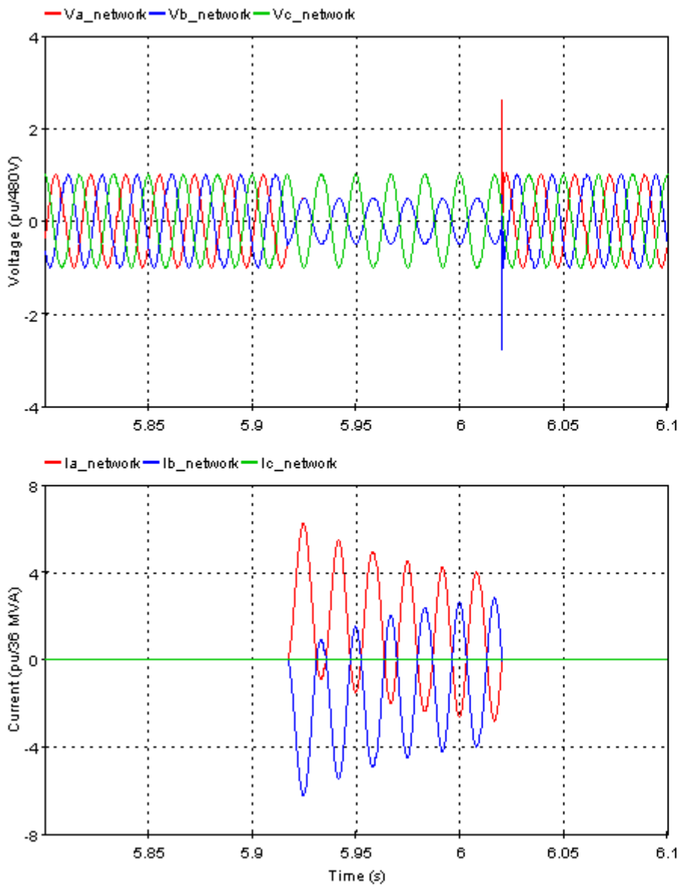

V-I Microgrid

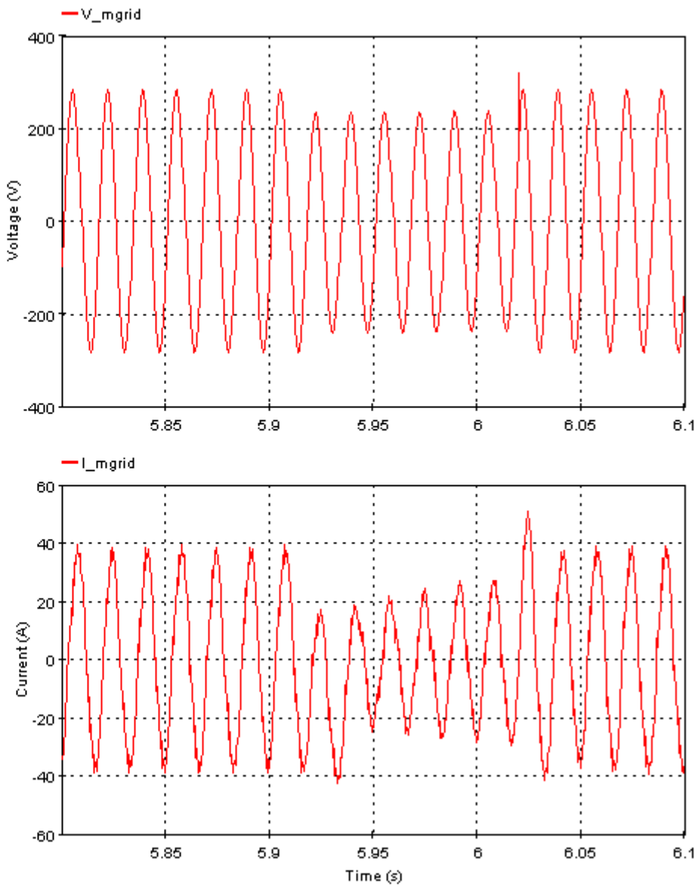

Micro-Grid Real-Time Digital Simulation: Very Fast EMT Transients

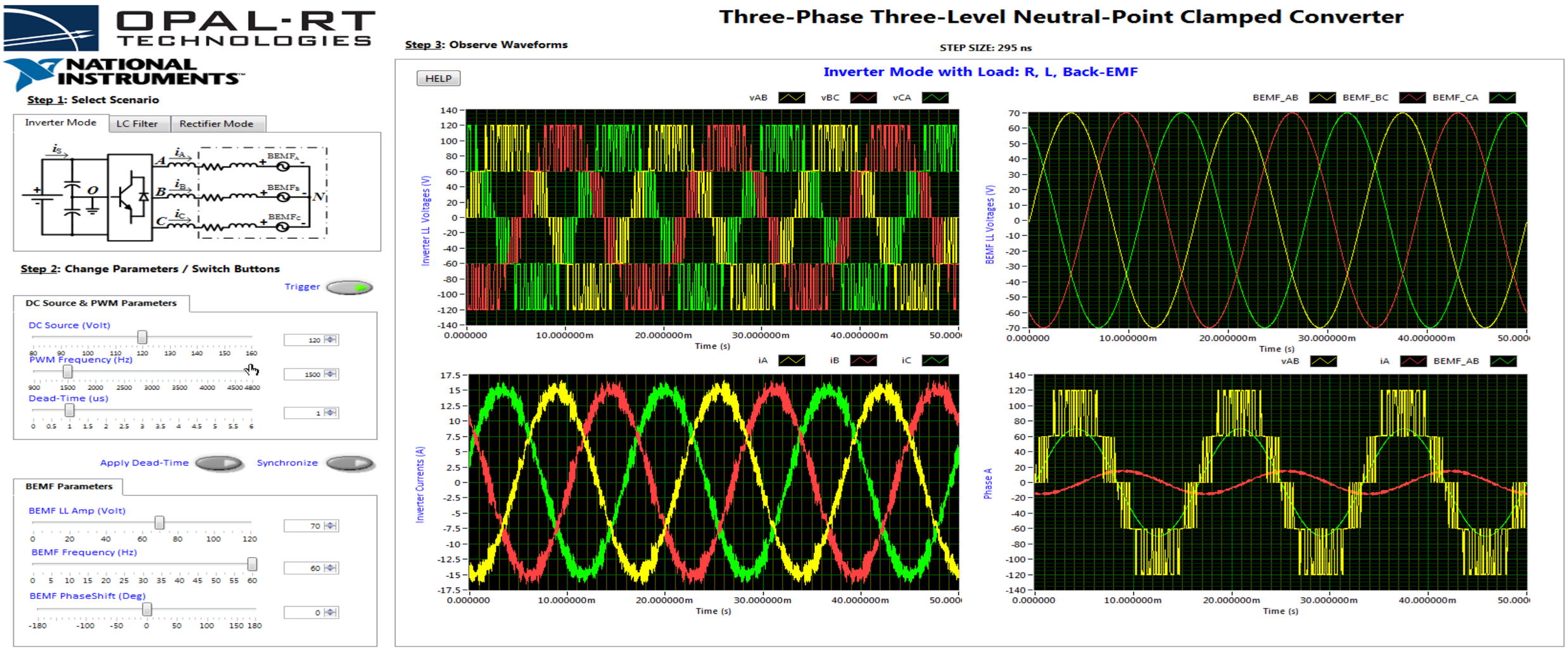

Example: Micro-Grid Real-Time Digital Simulation - PHIL
Power electronic loads, generation integrated with large distribution systems

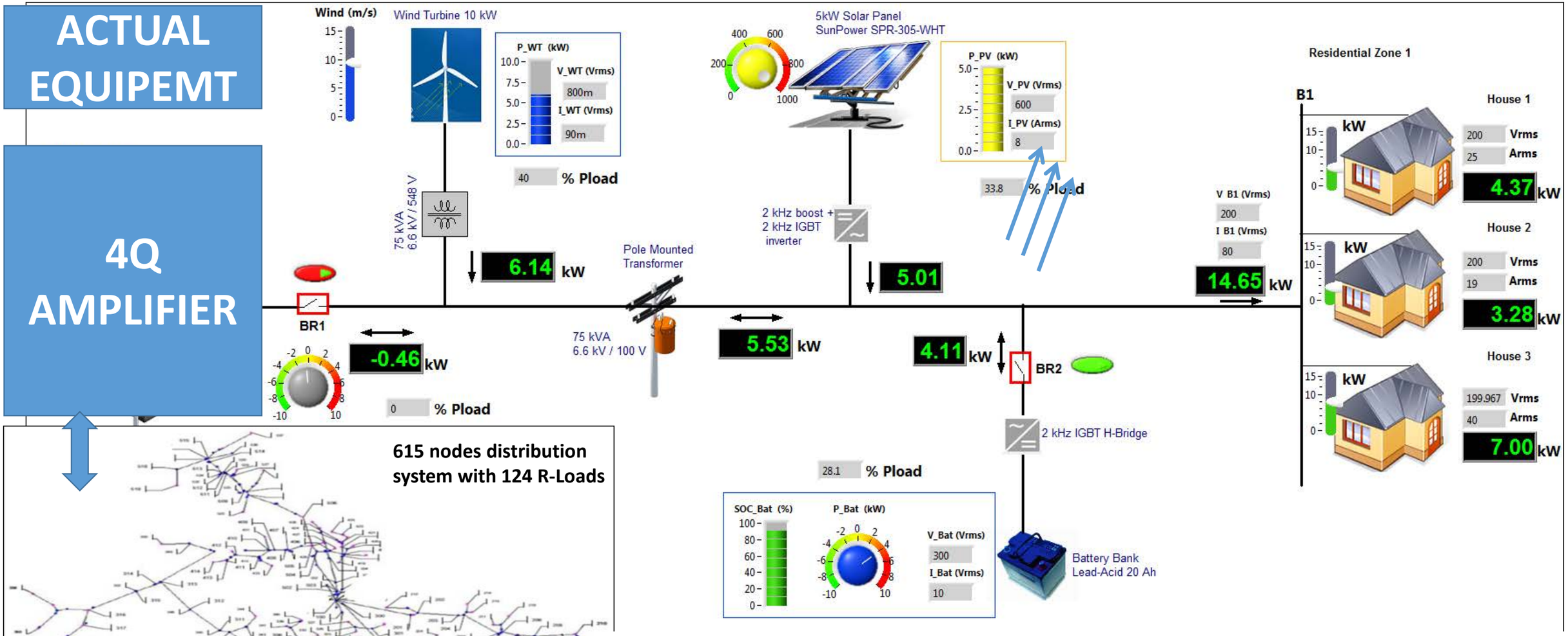

Distribution systems are becoming active:
Performance and security depend on controls , power electronics and communication
Dynamic performance analysis become as complex as transmission systems

KTH – SmarTS Lab – Smart Transmission Grids Applications

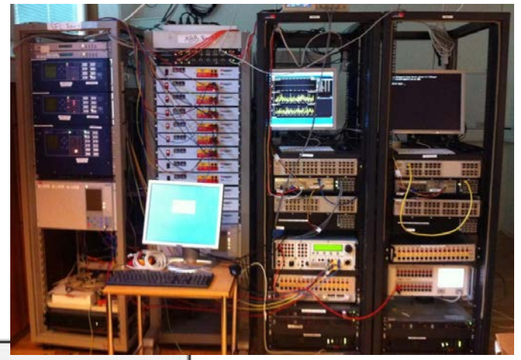

The SmarTS Lab Architecture

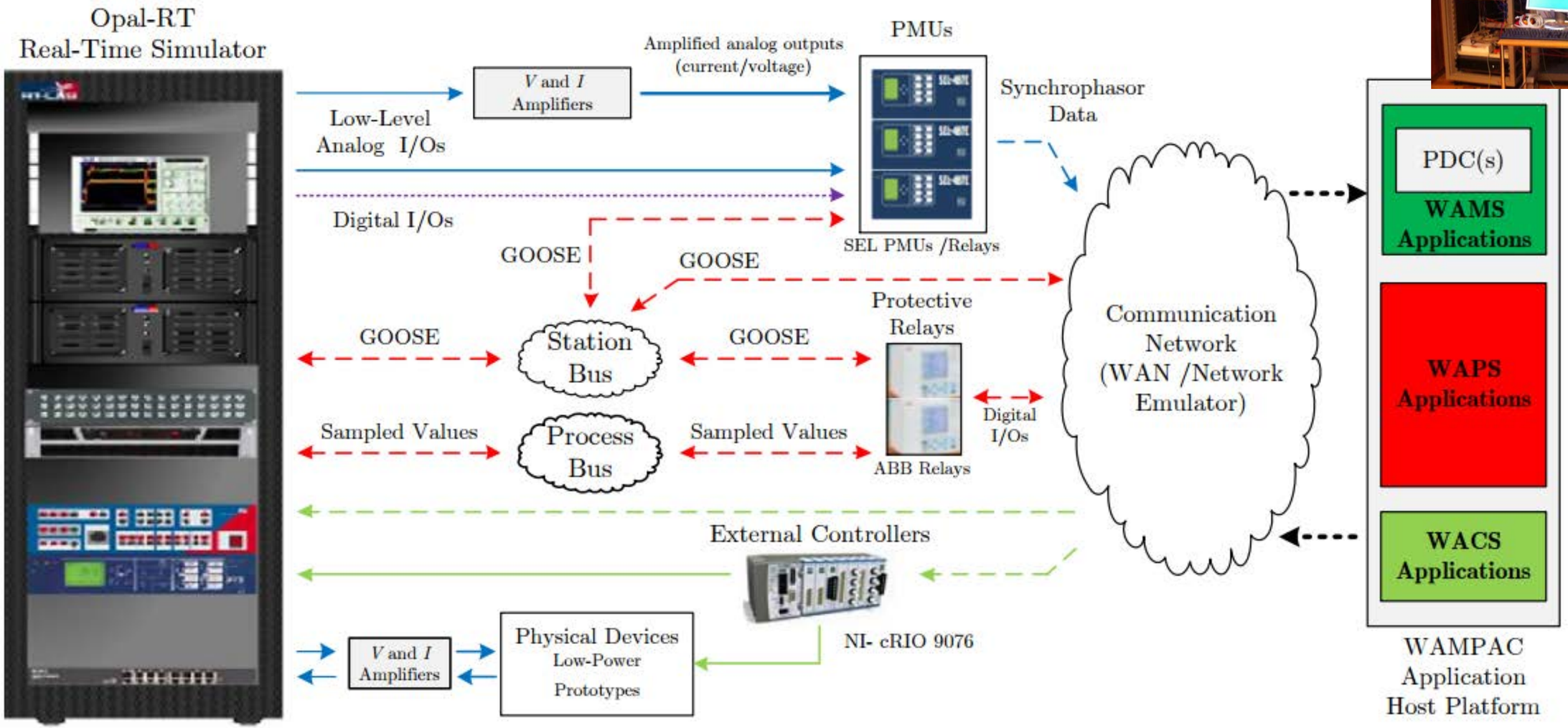

- DNP3
- IEC60870-5-104
- IEC61850-8-1 GOOSE
- IEC61850-9-2 SV
- Modbus
- C37.118

OPAL-RT TECHNOLOGIES

Integration with communication systems to design and test Wide area control and protection systems.

Offis – Smart Energy Simulation and Automation Lab

- Adaptative control and protection systems
- Real-time and non real-time co-simulation
- Rapid prototyping for centralized controllers and distributed control concepts / multi agent systems
- Simulation and visualization of complex, large-scale Smart Grid scenarios
- Topology-free connection of I/O (analog and digital)
- Integrated communication simulation

Standard-compliant Information- and Process Chain

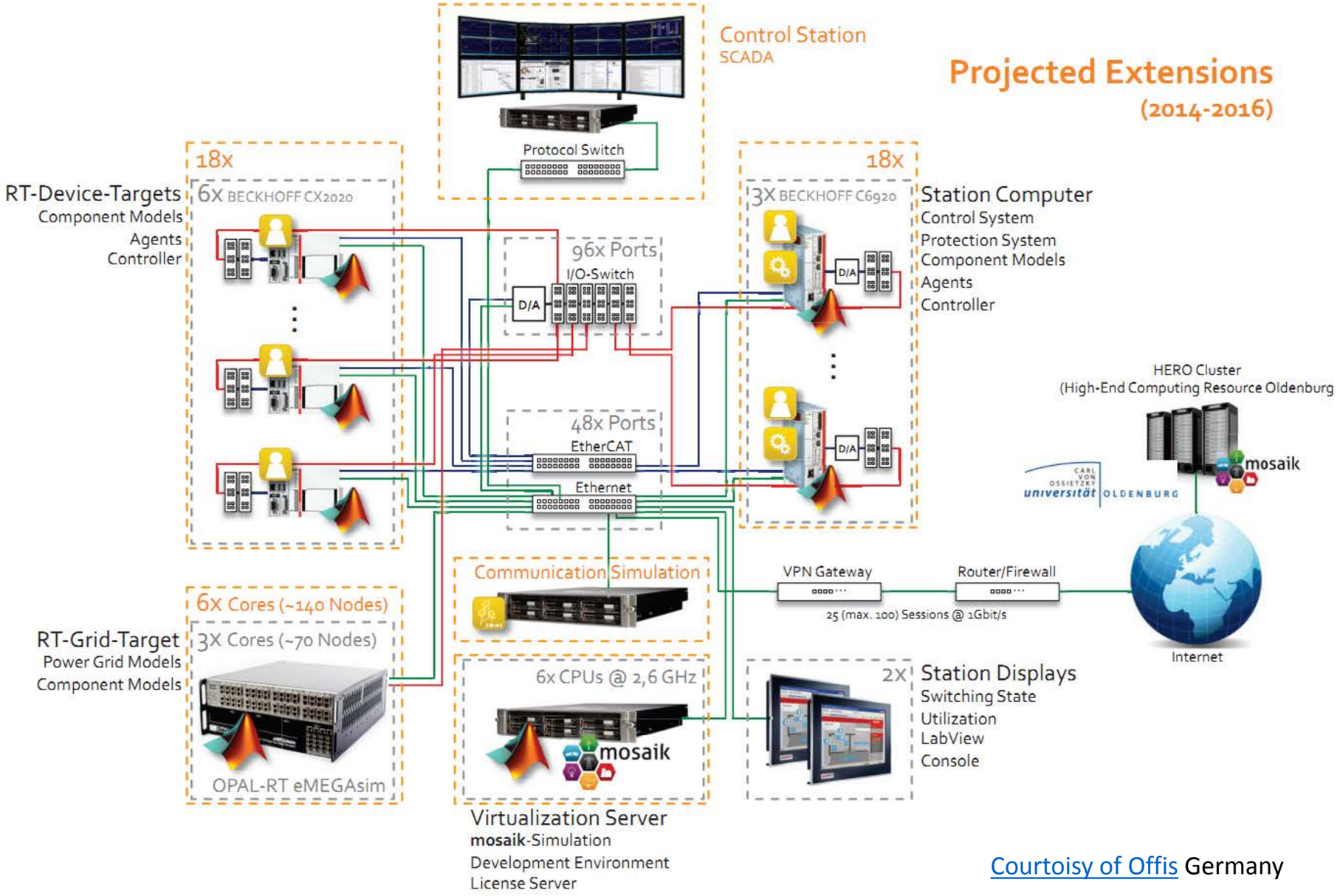

OPAL-RT TECHNOLOGIES

Courtoisy of Offis Germany

Possible all-DC Bus MEA (More Electrical Aircraft)

- Highly redundant configuration
- Composed of many power converters (> 40 kHz PWM)

Source: Virginia Polytechnic

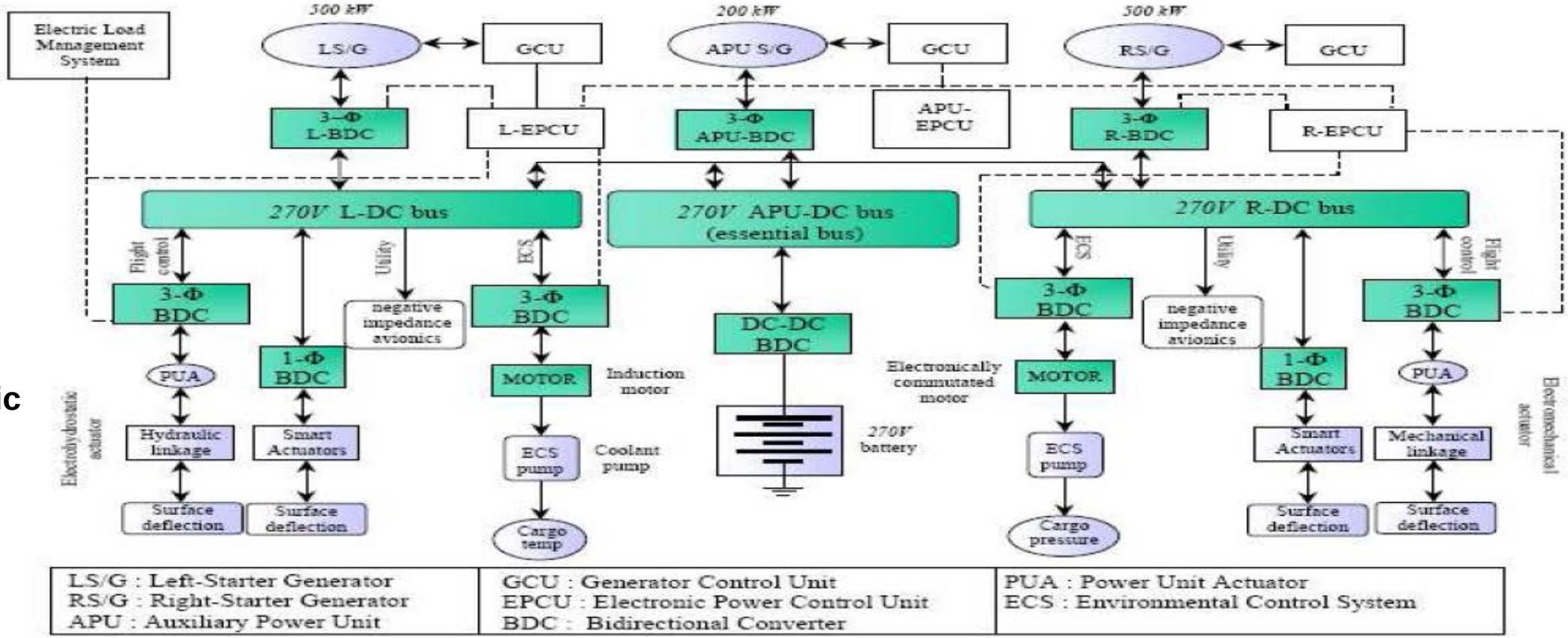

- OPAL-RT new **OP7000 MULTI-FPGA** HIL system
- and **RT-XSG Floating Point Solver on FPGA** are optimized for this application

Challenge for Real-time Simulation: Multi-rate - multi-domain - Scalability

Large1

!00,000 States

Model Size

Small

100 states

Power system
electro- mechanical
transients

Aircraft Dynamic
Vehicle Dynamic
Robotic

4 to 200+ CPUs

Power grids, HVDC, FACTS
Micro-grids

Train Traction systems

Industrial drives

100 us

10us

More electrical aircrafts
Electrical Hybrid vehicle
Fast power converters
1 or several FPGAs

Precise Power Electronics Simulation

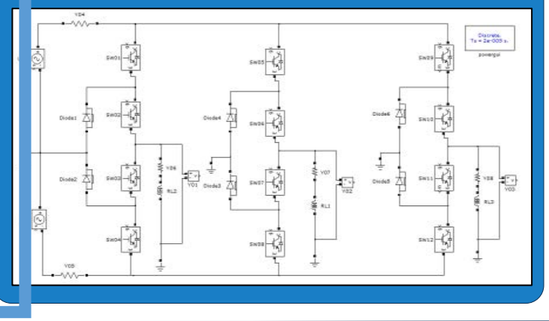

SLOW

(100 Hz)

10 – 15 milliseconds

FAST

(20 000 Hz)

10 – 50 microseconds

VERY FAST

(2 000 000 Hz)

100 to 500 nanoseconds

OPAL-RT TECHNOLOGIES

OPAL-RT HIL Real-Time Simulation Solutions

Large
!00,000 States

Model Size

Small
100 states

RT-LAB
ePHASORsim
(10,000 to 40,000 nodes with 1 to 10 CPU
SIMULINK, Simscape
DYMOLA

Power system
electro- mechanical
transients

Aircraft Dynamic
Vehicle Dynamic
Robotic

HYPERSIM
4 to 200+ CPUs

eDRIVEsim , eMEGAsim
4 to 40 CPUs

Power grids, HVDC, FACTS
Micro-grids

Train Traction systems

Industrial drives

100 us

10us

eFPGAsim

More electrical aircrafts
Electrical Hybrid vehicle
Fast power converters
1 or several FPGAs

Precise Power Electronics Simulation

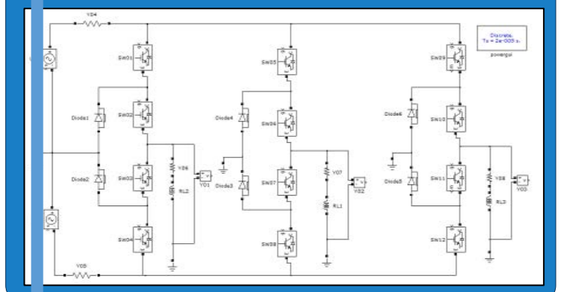

SLOW
(100 Hz)
10 – 15 milliseconds

FAST
(20 000 Hz)
10 – 50 microseconds

VERY FAST
(2 000 000 Hz)
100 to 500 nanoseconds

OPAL-RT TECHNOLOGIES

eFPGAsim: Sub-Microseconds time step for power electronics

- Time step ranging from 100 nanos to 1 us
- Automated process from model to FPGA high fidelity simulation - No need for FPGA VHDL coding
- Interfaced with Simulink/SPS models running on standard CPU with time step larger than 10 us (multi-rate simulation)
- Not limited to pre-configured topologies

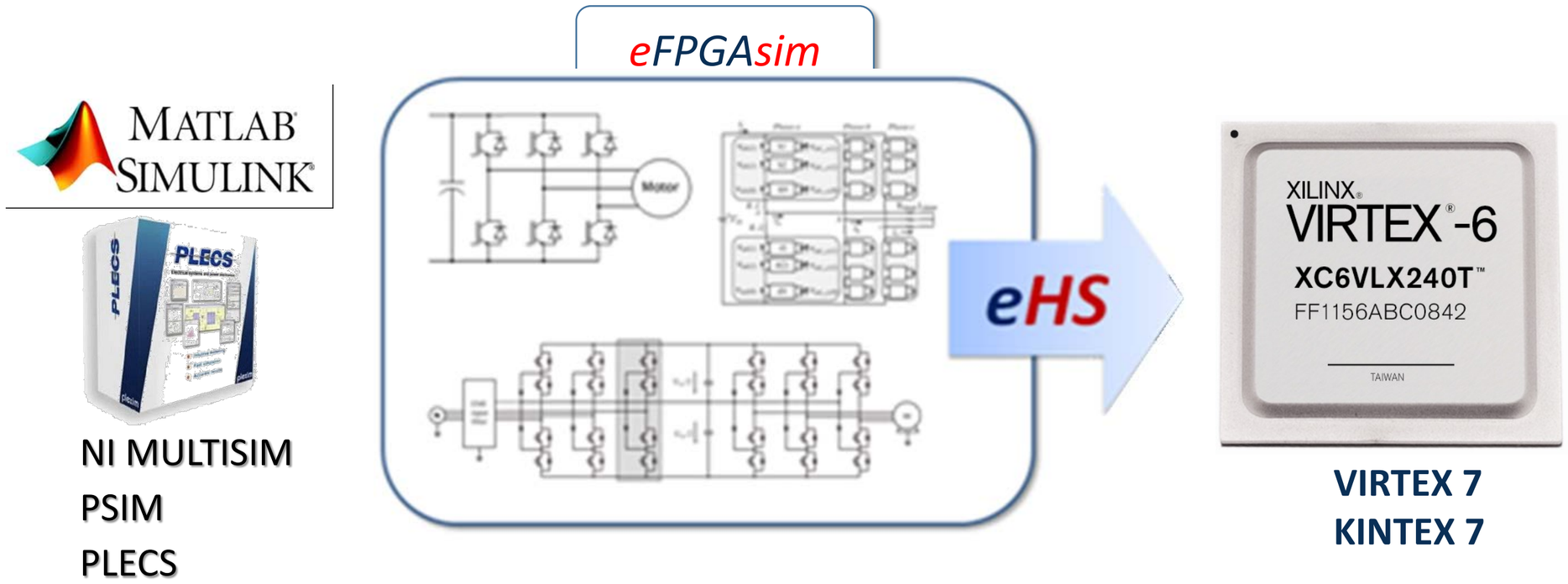

OPAL-RT TECHNOLOGIES

eFPGAsim: Sub-Microseconds time step for power electronics

eFPGAsim

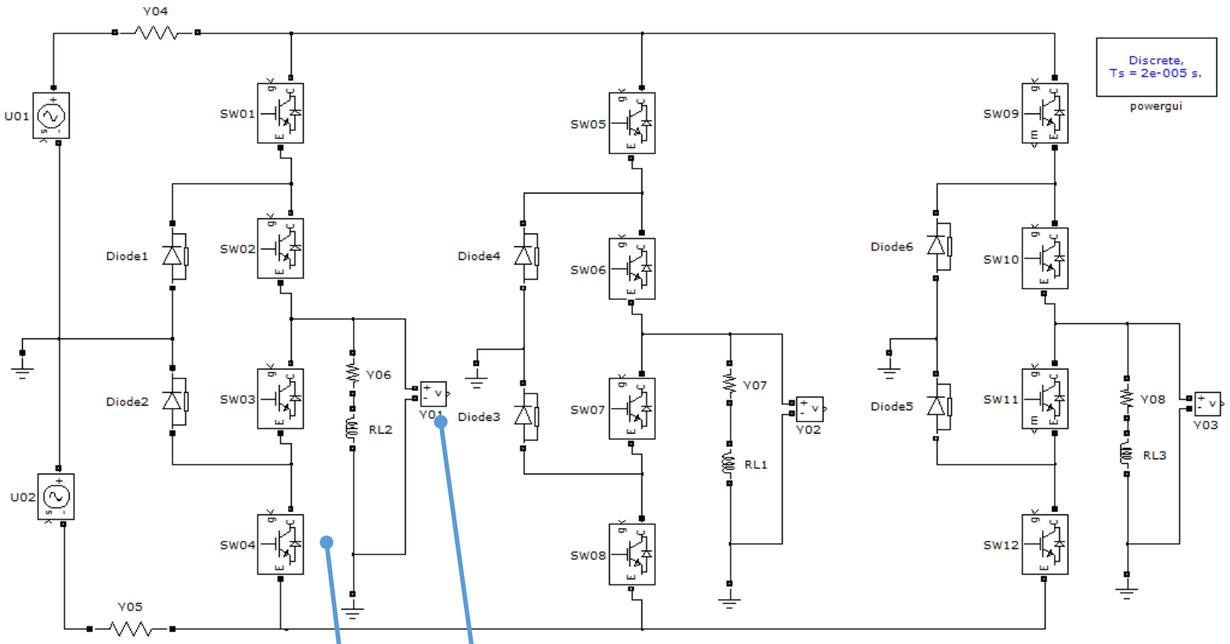

NPC 3-level : 35 elements

- 12 switches + 6 diodes
- 12 components
- 2 input sources
- 3 output measurements

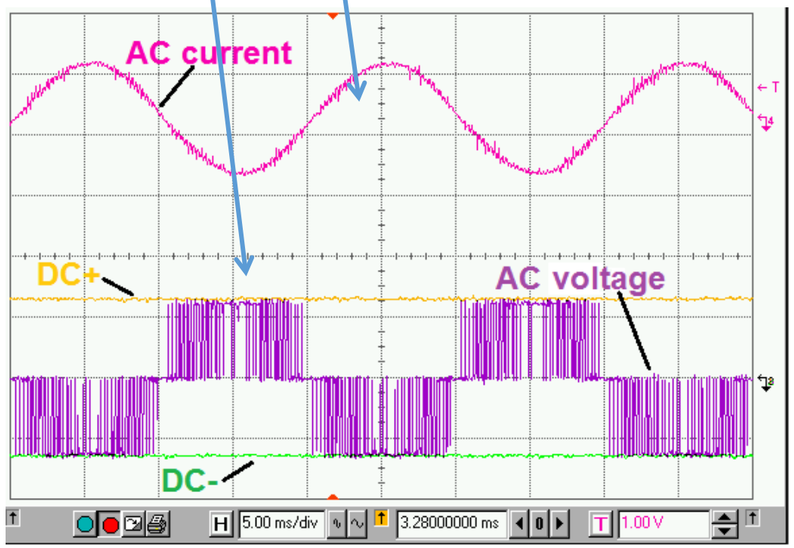

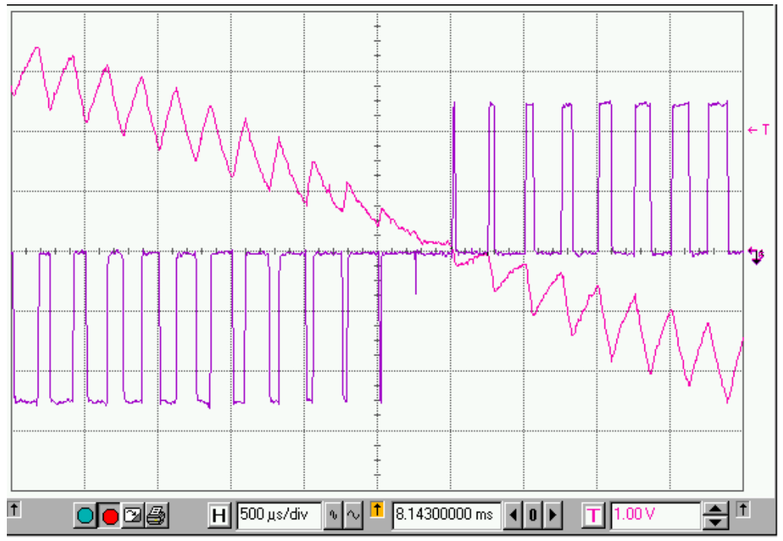

OPAL-RT TECHNOLOGIES

Challenges: Affordable, Scalable FPGA /Multi-core CPU hardware platform

cRIO (NI)
ZYNQ
2 ARM CORES
FPGA I/O

OP4500
eMINIsim
4- Intel CORES
FPGA I/O

OP5600–SP3&V6
MULTI CORE
SIMULATORS
With IO & FPGA

OP7020-V7 16 SFP

OP7000 MULTI FPGA-V6 & IO

6 /40 Industrial PC

SGI
SUPER
COMPUTER

2 4 6 16 40 64 256 +

Number of processors

OPAL-RT TECHNOLOGIES

Conclusions

- **In-land power systems as well as power systems embarked in aircraft, cars and ships and industrial power electronic systems are evolving very fast**
- **Several fast power converters must be integrated together using fast and complex controllers, protection and communication systems**
- **Scalable and open real-time simulators are required to design, test and understand the behavior of such complex systems**

OPAL-RT TECHNOLOGIES

MERCI

QUESTIONS or COMMENTS?

OPAL-RT TECHNOLOGIES

Which one do you want to learn more about?

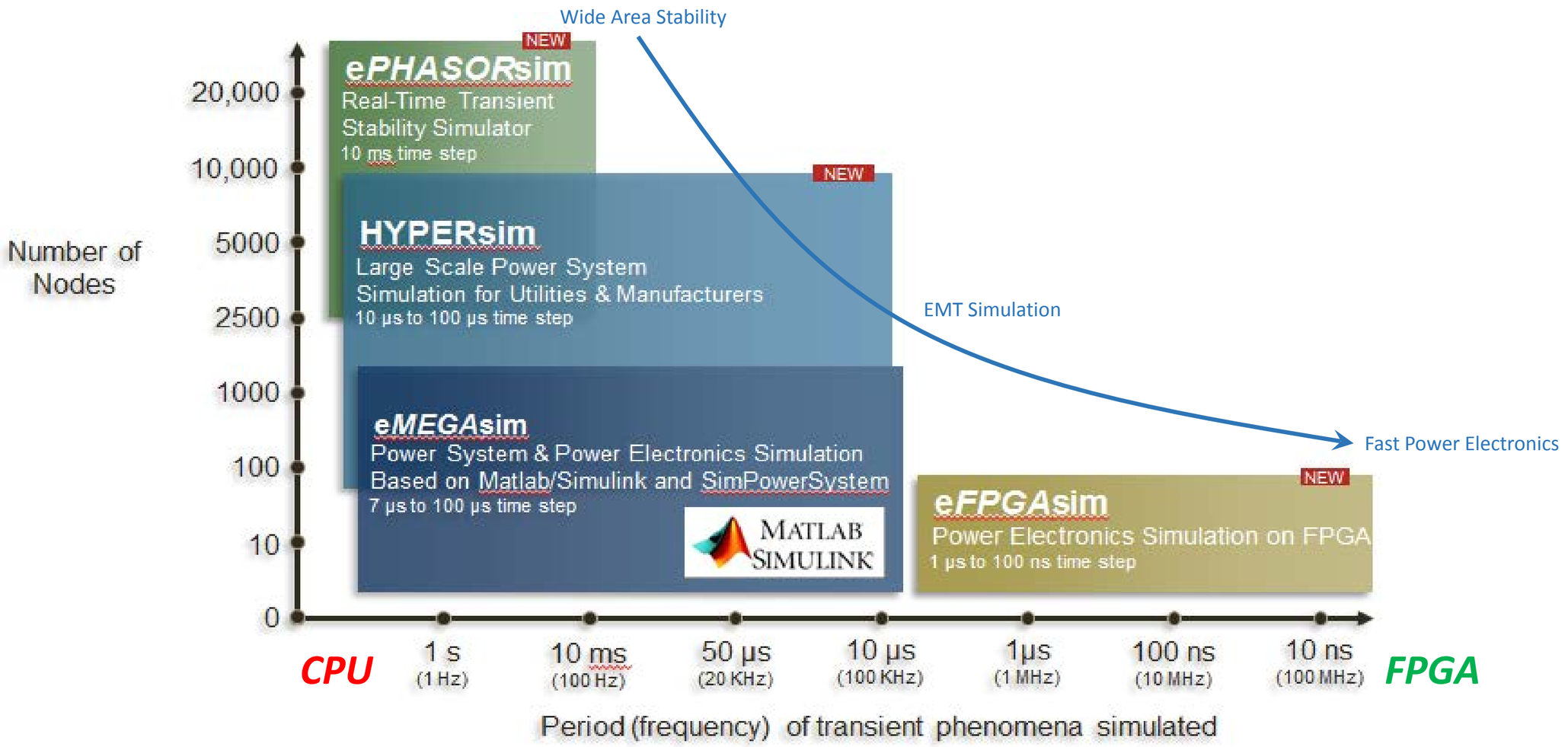

OPAL-RT TECHNOLOGIES

EXTRA SLIDES

Power Hardware-in-the-Loop test Bed (PHIL)

Analog Test Benches are still used to test new distribution energy systems

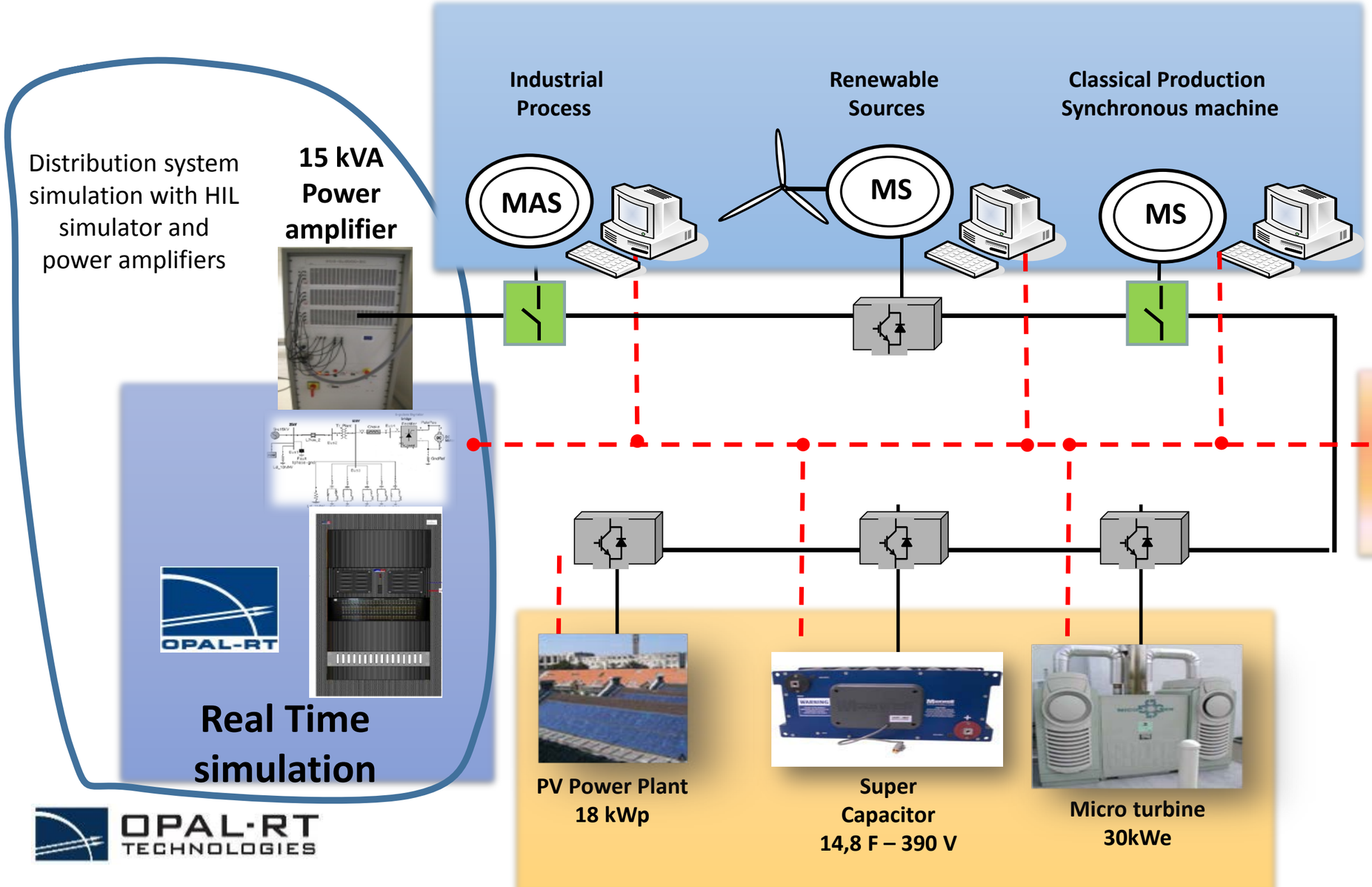

General overview of a « distributed energy » PHIL facility

OPAL-RT TECHNOLOGIES

HEI INGÉNIEURS POUR LE MONDE

CENTRALE LILLE

ARTS ET MÉTIERS ParisTech

Some Challenges : HYPRID REAL-TIME CO-SIMULATION
Multi-Rate, Multi-Domain and Scalability

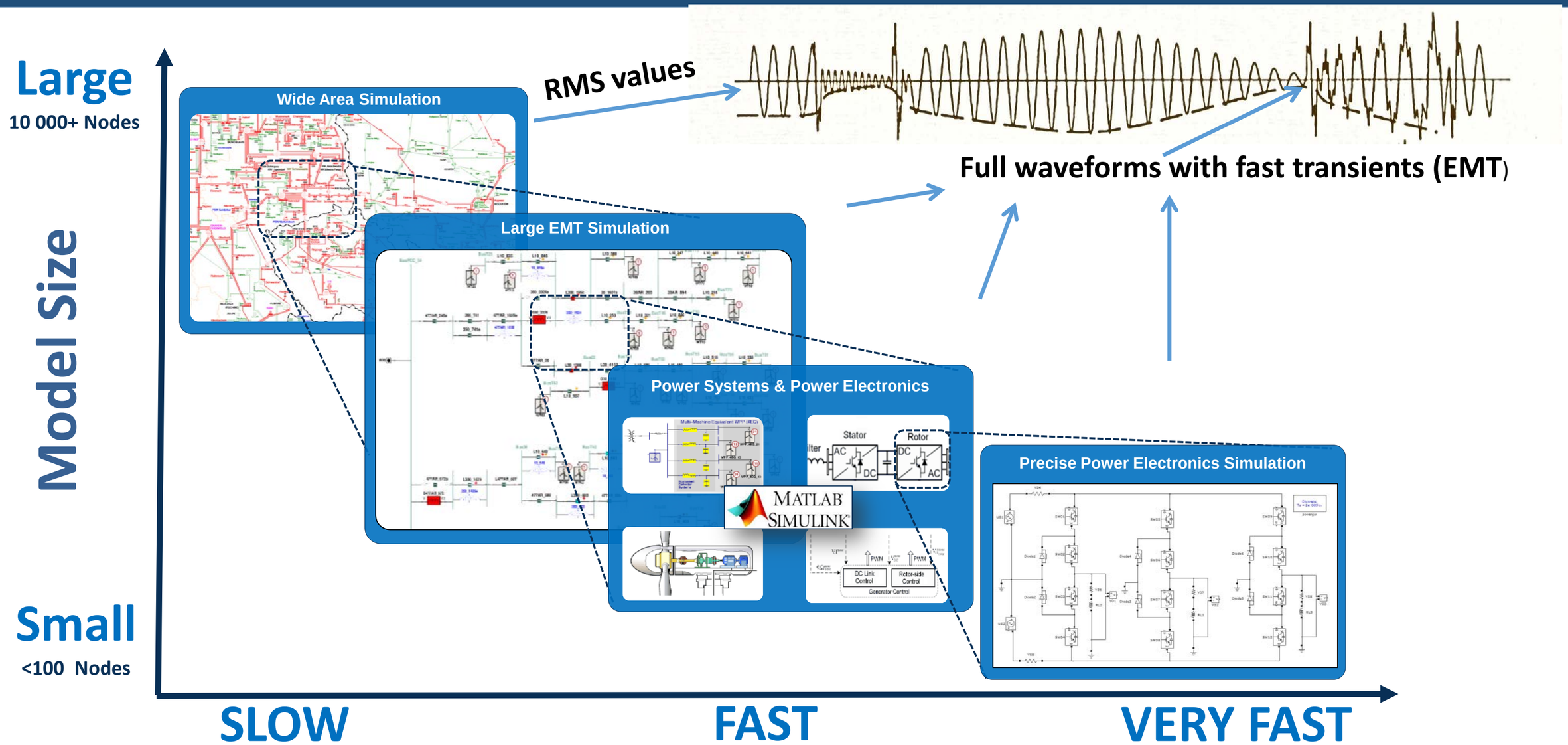

(100 Hz)
10 – 15 milliseconds

(20 000 Hz)
10 – 50 microseconds

(2 000 000 Hz)
100 to 500 nanoseconds

OPAL-RT TECHNOLOGIES

OPAL-RT eGRIDsim Real-Time Power Systems Simulation Suite

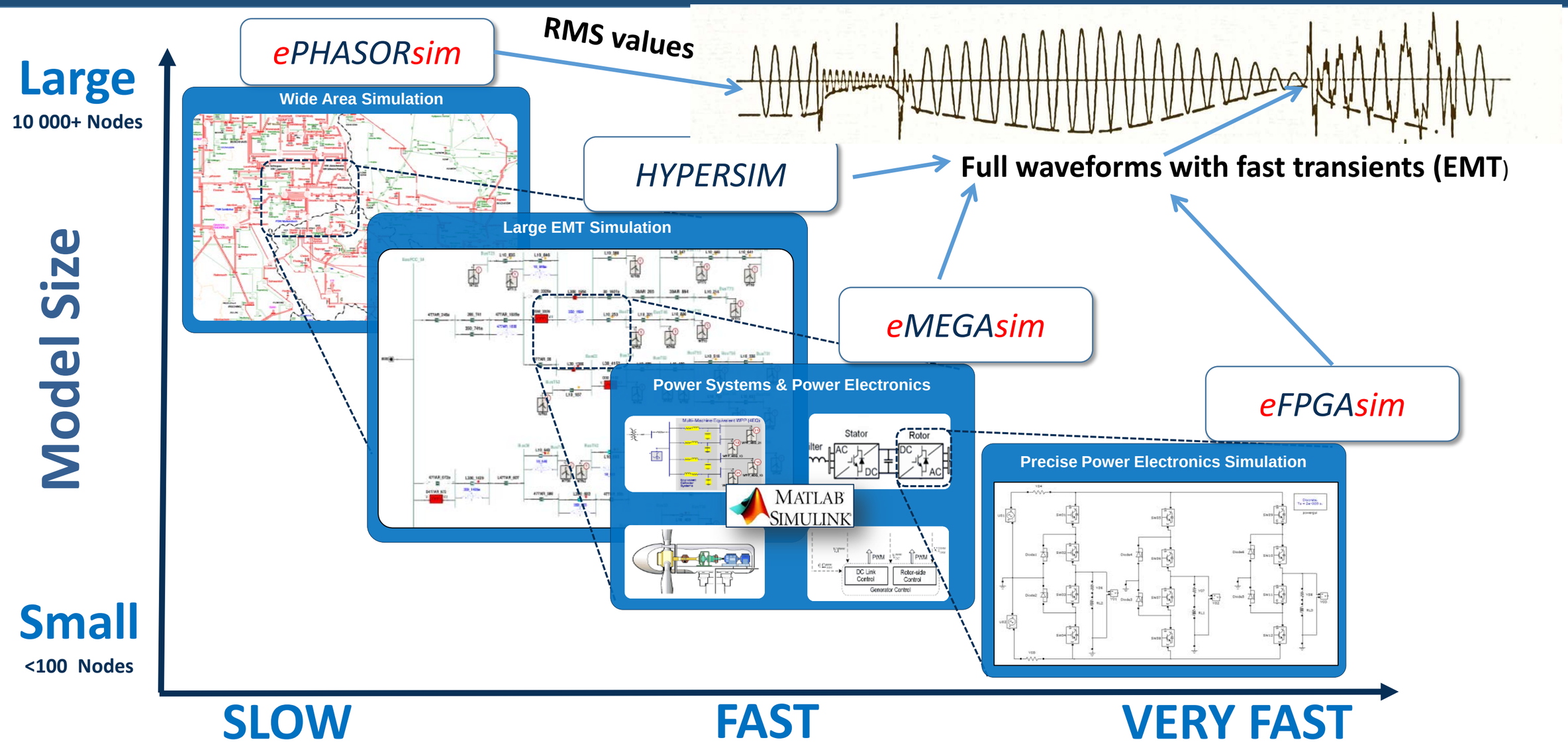

(100 Hz)
10 – 15 milliseconds

(20 000 Hz)
10 – 50 microseconds

(2 000 000 Hz)
100 to 500 nanoseconds

OPAL-RT TECHNOLOGIES

Scalable FPGA /Multi-core CPU hardware platform

cRIO (NI)
ZYNQ
2 ARM CORES
FPGA I/O

OP4500
eMINIsim
4- Intel CORES
FPGA I/O

OP5600–SP3&V6
MULTI CORE
SIMULATORS
With IO & FPGA

OP7020-V7 16 SFP

OP7000 MULTI FPGA-V6 & IO

6 /40 Industrial PC

SGI
SUPER
COMPUTER

2 4 6 16 40 64 256 +

Number of processors

OPAL-RT TECHNOLOGIES

Software Compatibility

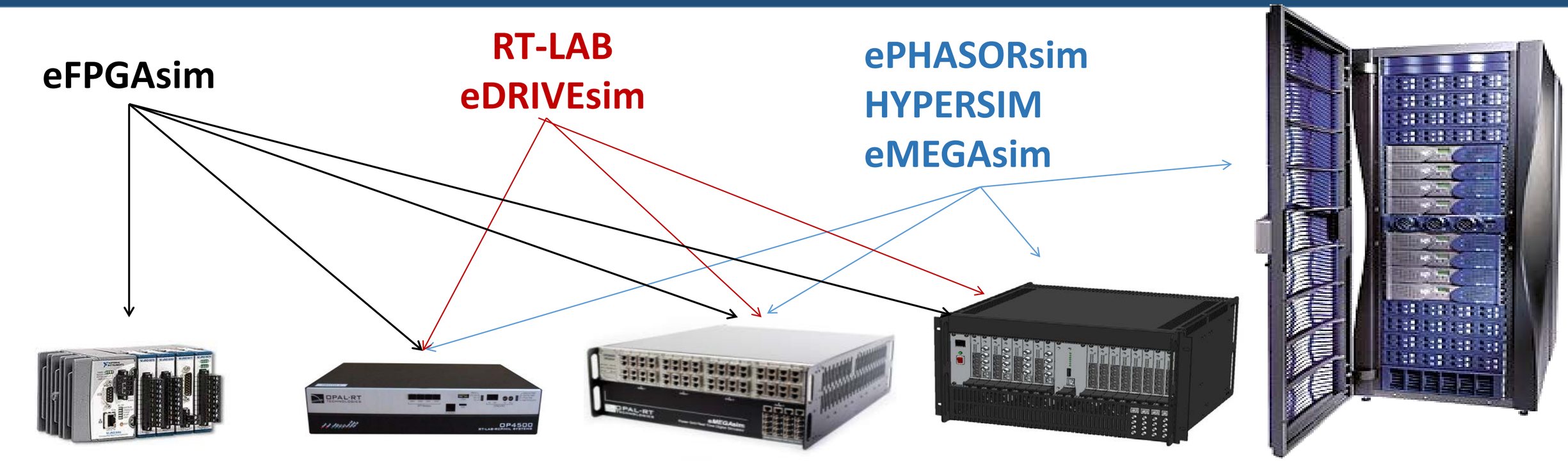

cRIO (NI)
ZYNQ
2 ARM CORE
FPGA I/O

for under graduate tutorial

OP4500
eMINIsim
4- Intel CORES
FPGA I/O

OP5600 - 07
MULTI CORE
SIMULATORS
With IO & FPGA

OP7000
MULTI FPGA
IO and
SIMULATORS
6 /40 Industrial PC

SGI
SUPER
COMPUTER

2 | 4 | 6 | 16 | 40 | 64 | 256 +

Number of processors

OPAL-RT TECHNOLOGIES

Connectivity

OP4500
eMINIsim
4- Intel CORES
FPGA I/O

OP5600 - 07
MULTI CORE
SIMULATORS
With IO & FPGA

OP7000
MULTI FPGA
IO and
SIMULATORS

SGI
SUPER
COMPUTER

4 6 16 32 64 256 +

Nbr of processors

OPAL-RT TECHNOLOGIES

OP4200 – ZYNQ-ARM HIL/RCP – 2016-Q1

Compact, Robust, Low-Cost, Modular and powerful FPGA-Based HIL/RCP Systems

16AD **16DA** **32DI** **32DO**

ZYNQ 7030

CAN

Dimension: 7.5’’x7’’x7’’

OPAL-RT TECHNOLOGIES