RTDS Technologies

REAL TIME DIGITAL SIMULATION

YOUR POWER GRID
YOUR CONDITIONS
IN REAL TIME

CYBER-PHYSICAL SYSTEM

A Power System
Real Time Digital Simulator
Perspective

NIST Definition

Presentation Outline

- Introduction
- Cyber Physical System
- RTDS Simulator
- Communication Features
- Applications
- Questions and Answers

The Company Today

- World's first real time digital simulator
- Technology licensed from Manitoba Hydro under royalty bearing agreement
- Worldwide exclusive rights to technology
- Current number of employees ~60

Company Background

1981 Manitoba HVDC Research Centre

- Mandate to Perform R&D activities in Field of HVDC.
- Developed Offline Simulation Tools: PSCAD/EMTDC
- Wanted to Test Real HVDC Controls.
  - Option 1: Transient Network Analyzer ($5-10 million)
  - Option 2: Develop their own Digital Simulator

1986 Initiation of RTDS Development Project

1989 1st Real-Time Simulation

1993 1st Commercial Installation

1994 Creation RTDS Technologies, Inc.

Company Background

Clients

Electrical Power Utilities

Electrical Equipment Manufacturers

Research and Learning Institutions

Consultants

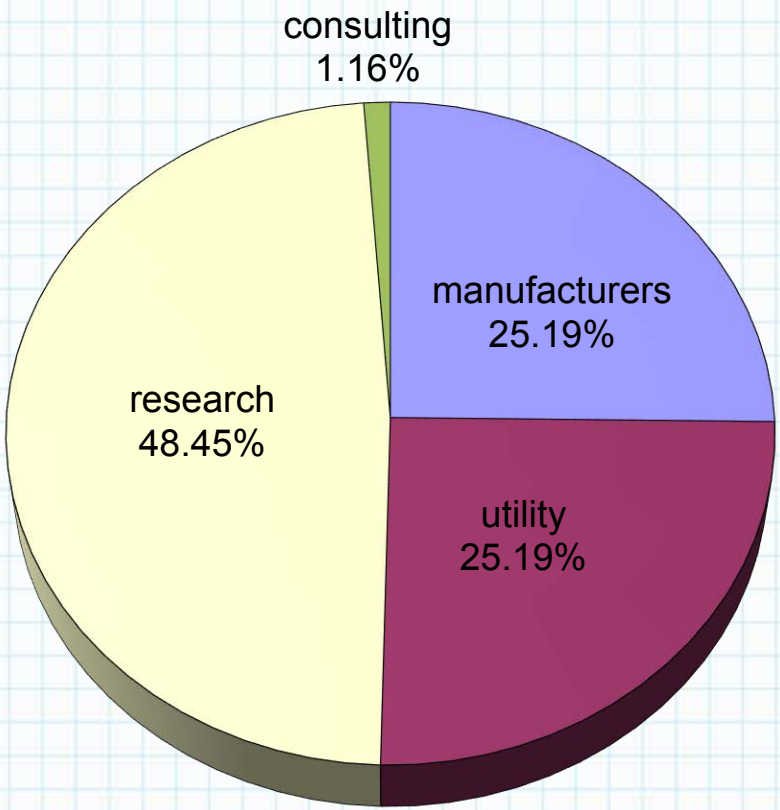

CYBER PHYSICAL SYSTEM

A Power System
Real Time Digital Simulator
Perspective

RTDS Technologies

The World Standard for Real Time Digital Power System Simulation

What is Cyber Physical System?

According to National Institute of Standards and Technology (NIST), unmanned vehicles, "intelligent" buildings, your cell phone, the fitness bracelet on your wrist—all of these are cyber-physical systems (CPS). NIST has released a draft CPS Framework document intended to help manufacturers create new CPS that can work seamlessly with other such smart systems that bridge the physical

How does it apply to us?

- A lot has been discussed including several applications
- In our context I will take CPS to mean protocol based communication system controlling conventional physical power system comprising of generators, transformers, breakers, etc.
- Is the simulation technology ready for the challenge?
  - What is the current requirement for test beds
  - What are current capabilities
  - Where do we go

Controller Configuration

Analog signal based controls and protection.

- Conventional relays, etc.

Protocol based controls and protection

- New protocol based relays

Local Controls

- Generator controls (exciter, governor, etc.)
- Conventional relays

Remote Controls

- SCADA

Wide Area Protection and Controls

- Remedial Action Schemes
- PMU based coordinated controls (stability, damping)

Application drives the development

- As the use of such protocol based communication and control of power system has increased, there has been an increased need to test and validate them as well. Accordingly simulator manufactures such as RTDS have provided these capabilities in our simulator and will continue to provide the new capabilities as the standards evolve.

What should a simulator have?

The simulator should provide

A rich set of power system models that are highly accurate and run in hard-real-time

A complete set of most commonly used protocols

- DNP3
- IEC 61850 – GOOSE/GSE and Sampled Measured Value
- MMS
- IEEE C37 118 PMU protocol
- Etc.

Provide a generic interface so that a protocol translator can be used for custom implementation

- Generic Socket Communication
- Interface to an FPGA platform
- Etc.

Then and Now

- Analog Simulator
- Interface of digital communication interface is difficult

- Real-Time Digital Simulator
- Simulator itself being a digital platform, it is ideal and ready for cyber physical system testbed

SCADA and Substation Automation

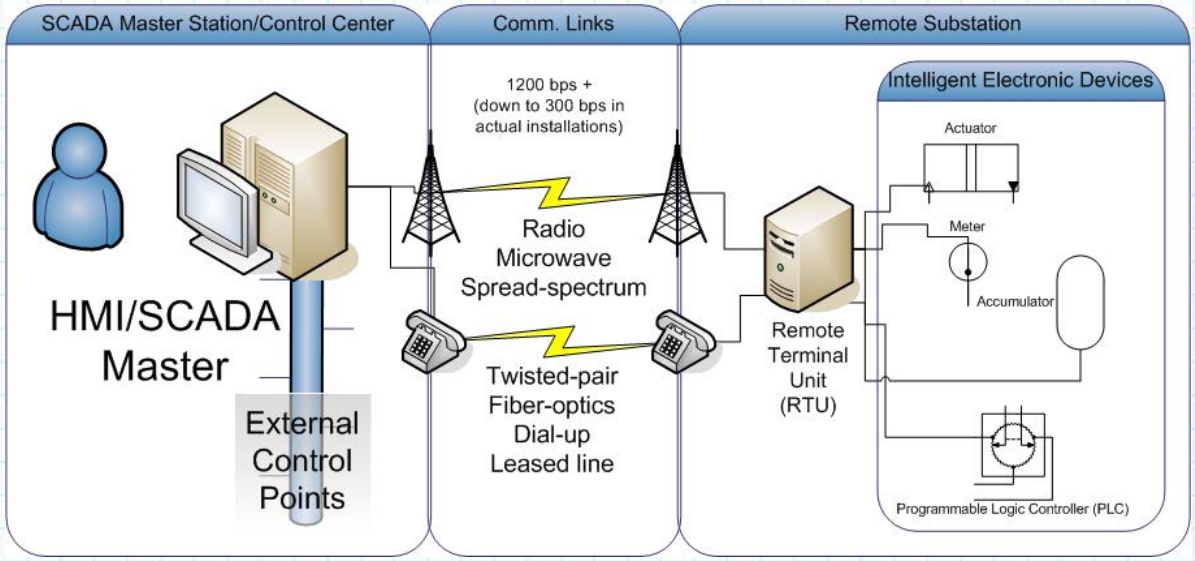

Reference: Wikipedia

SIMULATION HARDWARE

Simulation Hardware

RTDS Hardware:

- *Custom parallel processing computer*
- *Hardware is modular, allowing users to increase computing capability as required*
- *Main interface with the hardware is a through user-friendly software*
- *Ample, convenient input and output allowing connection of physical devices*

Simulation Hardware

A unit of hardware is called a 'Rack' and typically includes:

- 1 - 6 RISC Processor Card (GPC or PB5)
- 1 Workstation Interface Card (GTWIF)

Simulation Hardware

The RTDS simulator is designed to be scalable. Multiple racks can be connected together to accommodate both small and large scale simulations.

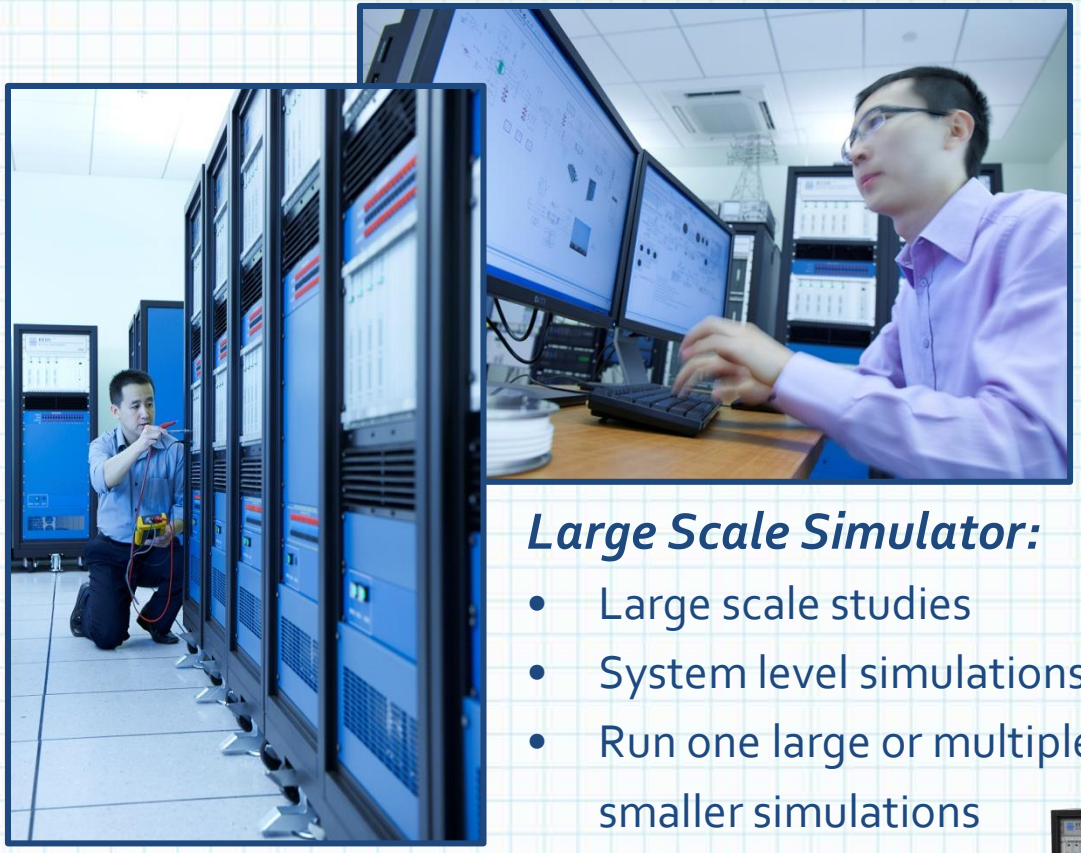

Small Scale Simulator:

- *Reduced # of processors*
- *Transportable to site*

Large Scale Simulator:

- Large scale studies
- System level simulations
- Run one large or multiple smaller simulations

Simulation Hardware

IO Cards

GTAI

12 channel, isolated 16-bit analogue input card

GTAO

12 channel, isolated 16-bit analogue output card

GTDI

64 channel, isolated digital input card

GTDO

64 channel, isolated digital output card

GTFPI

Interface to digital and high voltage interface panels

GTNET

Ethernet Interface System. Allows for communication using several industrial protocols

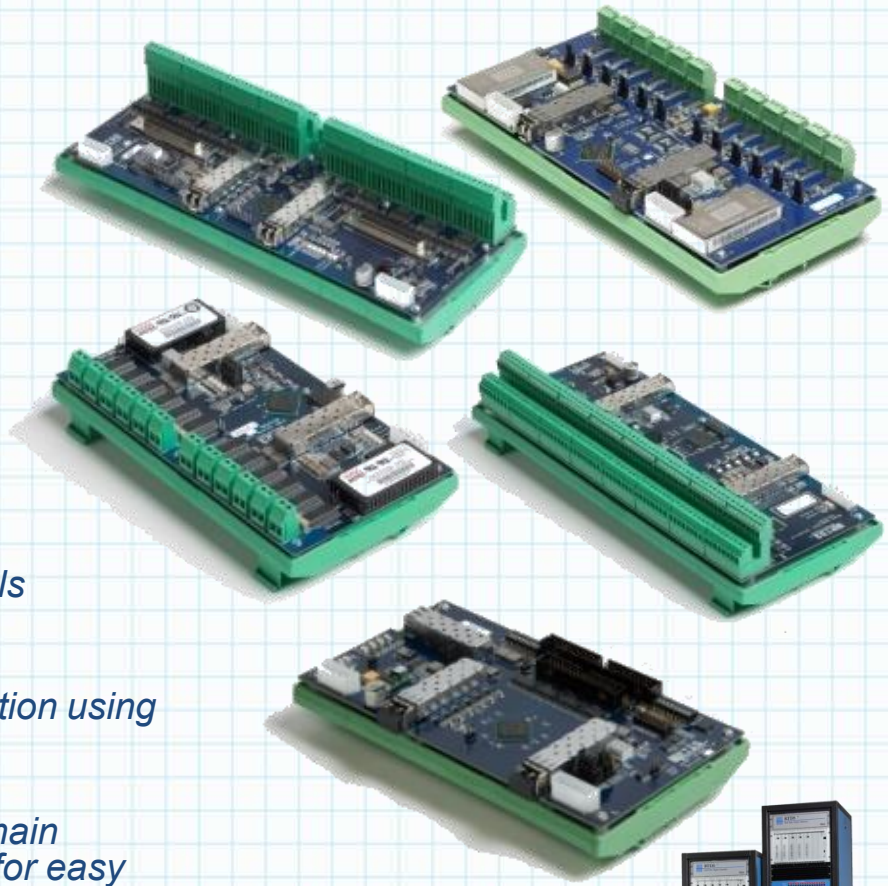

The GT family of I/O cards can be daisy chain connected to a single GPC fiber port allowing for easy scaling of the simulators IO capabilities

Simulation Hardware

GT Network Communication - GTNET:

- Rack mountable card
- GTNET provides a mechanism to communicate with external devices over the ETHERNET (i.e. the LAN)
- Originally developed for IEC 61850 communication now being adopted by the protection industry
- Additional communication protocols implemented in response to customer requests
- Up to 5 communication protocols can be installed on a single GTNET card
- Only one protocol can be active during a simulation case (user selectable)

RTDS Technologies

Simulation Hardware

GTNET Communication Protocols

IEC 61850

- GTNET – GSE
  - IEC 61850 binary messaging
- GTNET – SV
  - IEC 61850-9-2 sampled values

COMTRADE PLAYBACK

- GTNET – PB
  - For very large data playback

Distributed Network Protocol (DNP)

- GTNET – DNP
  - DNP for SCADA interface

Phasor Measurement Unit (PMU)

- GTNET – PMU

TCP/IP, UDP Communication

- GTNET – SKT

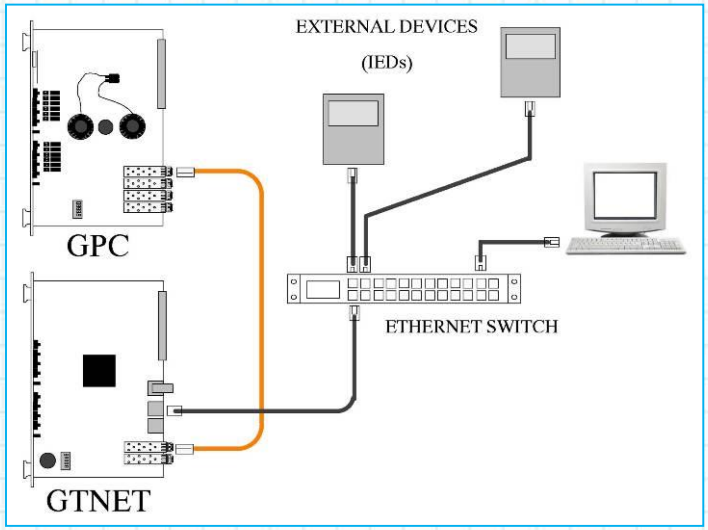

RTDS Technologies

Simulation Hardware

GTSYNC – External time synchronization:

- The GTSYNC card is used to synchronize the RTDS simulation time-step to an external time reference (e.g. GPS clock) and to synchronize devices under test.
- 1 Pulse Per Second (1PPS) over BNC coax or ST type fibre connectors
- IEEE 1588 over RJ45 or ST fibre connectors
- IRIG-B over BNC coax connection
- Synchronization of the simulation time-step to an external time reference is necessary advantageous for IEC 61850-9-2 sampled value output.

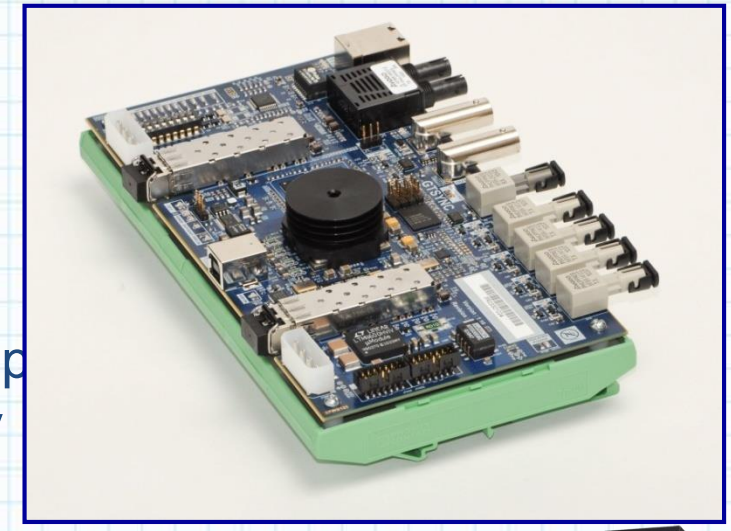

RTDS Technologies

Modular Multi-level Converter

Uses programmable GTFTPA Platform

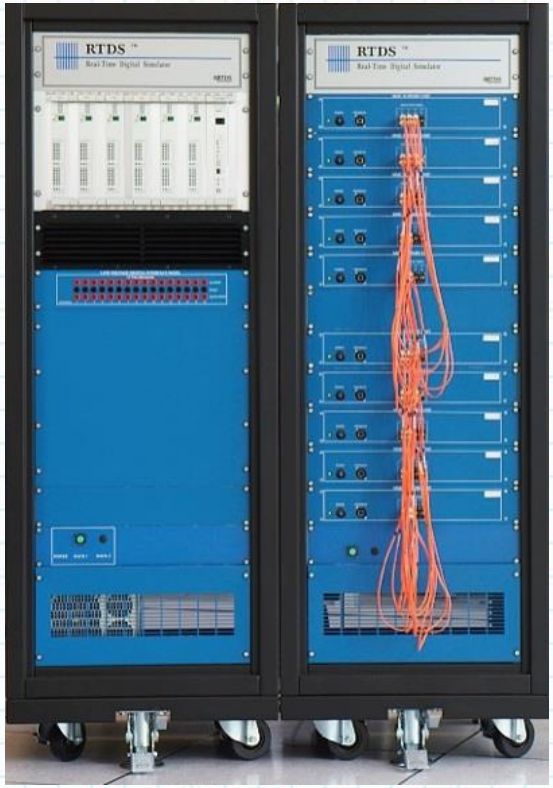

SIMULATION SOFTWARE

RTDS Technologies

The World Standard for Real Time Digital Power System Simulation

Simulation Software

RSCAD Software Suite:

Modular, Java Based GUI for RTDS

Runs under Windows and Linux

Create, Interact and Analyze Simulations

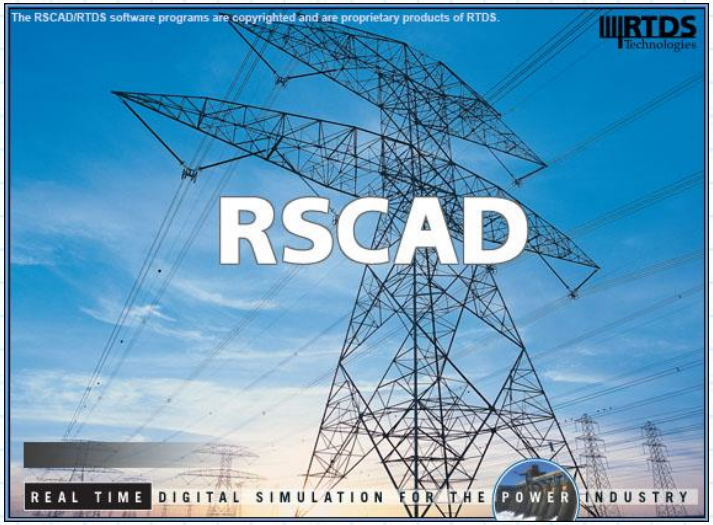

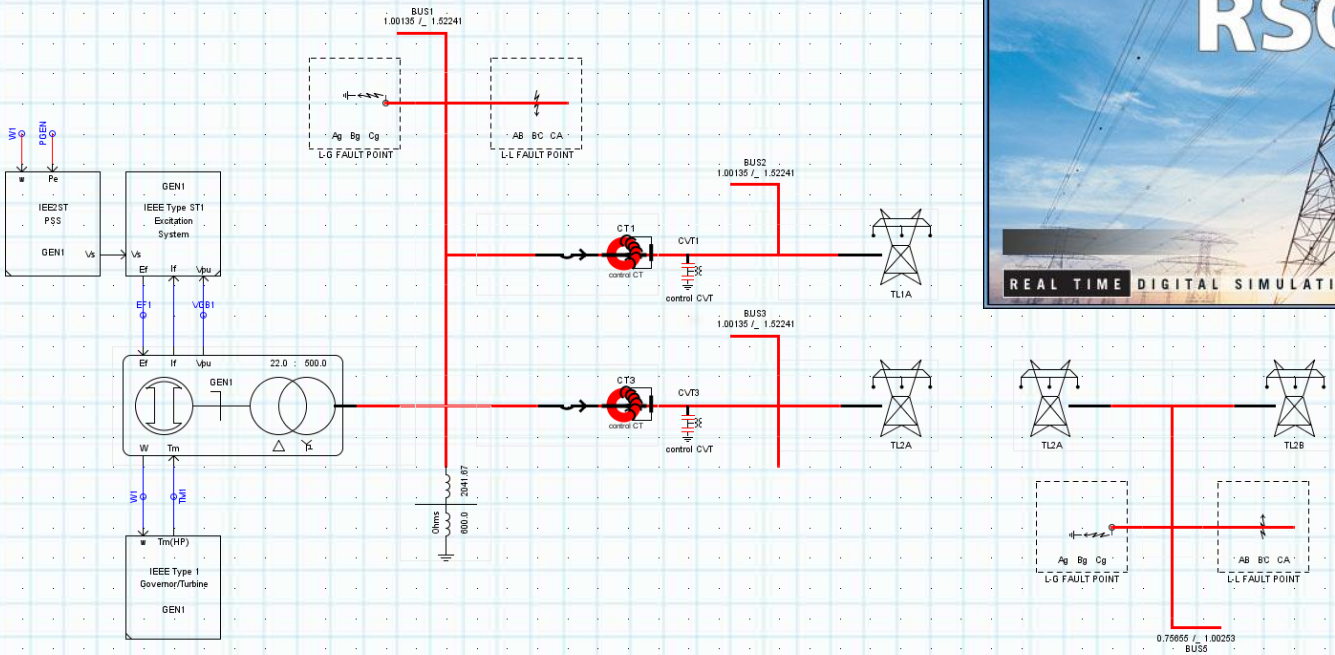

RTDS Technologies

The World Standard for Real Time Digital Power System Simulation

Simulation Software

File Manager

- DRAFT
- RUNTIME
- T-LINE
- CABLE
- MULTIPLOT
- CBUILDER
- CONVERT

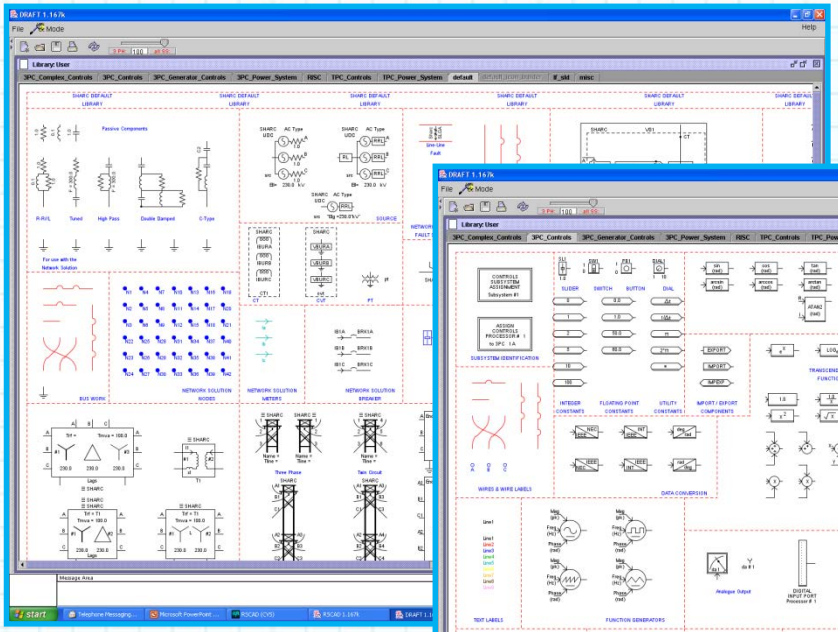

Power System Component Library

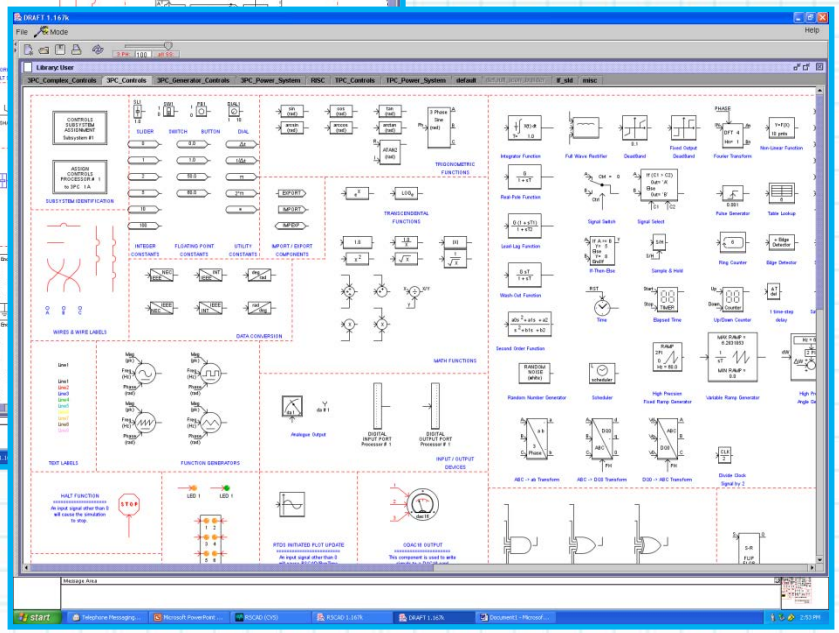

Control System Component Library

RTDS Technologies

The World Standard for Real Time Digital Power System Simulation

Simulation Software

File Manager

- DRAFT
- RUNTIME
- T-LINE
- CABLE
- MULTIPLOT
- CBUILDER
- CONVERT

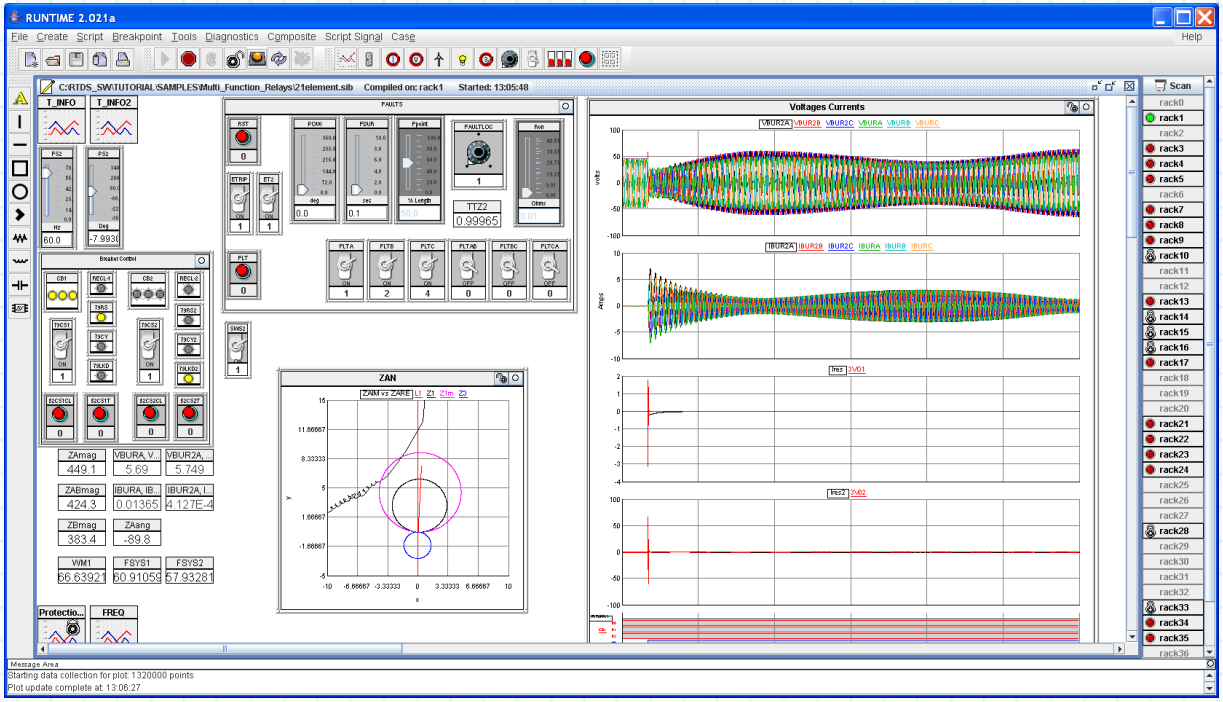

- *Run Simulation*
- *Create HMI for simulation*
- *Trigger Events*
- *Monitor Signals*
- *Export Data*

Simulation Software

File Manager

- DRAFT
- RUNTIME
- T-LINE
- CABLE
- MULTIPLOT
- CBUILDER
- CONVERT

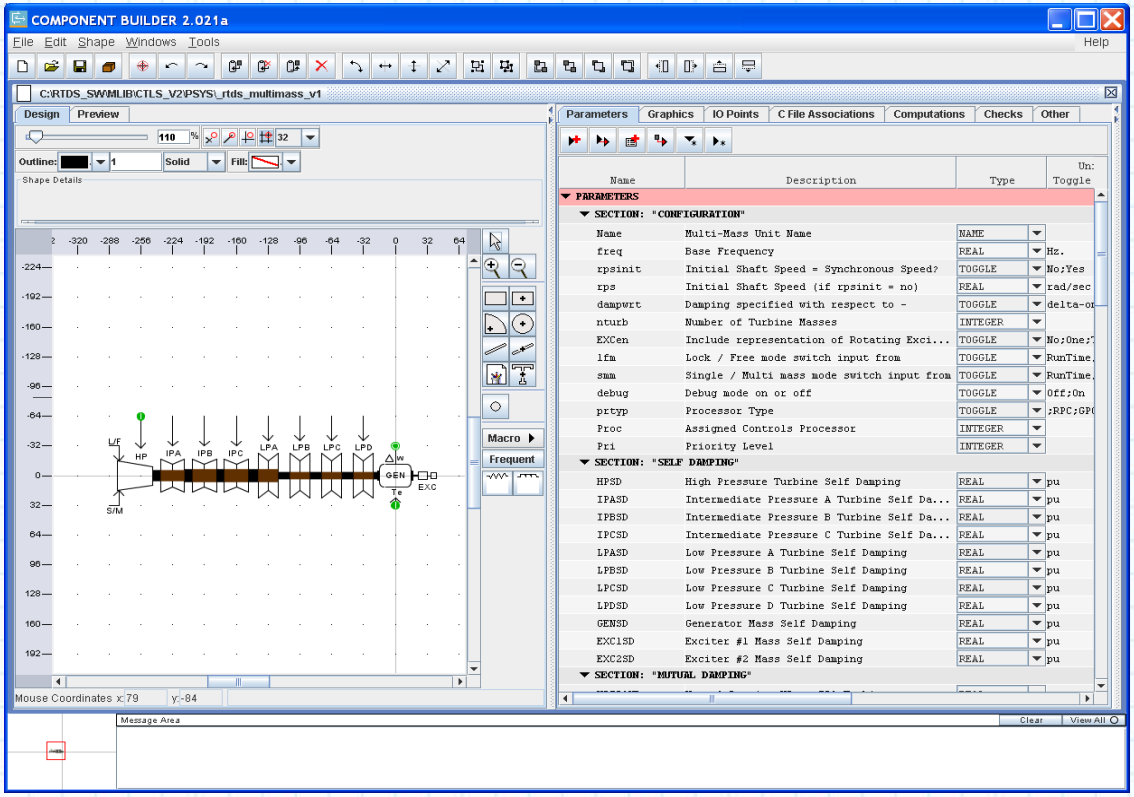

Create Customize Models

- Power System Components
- Control System Components

RTDS Technologies

The World Standard for Real Time Digital Power System Simulation

Simulation Software

File Manager

- DRAFT
- RUNTIME
- T-LINE
- CABLE
- MULTIPLOT
- CBUILDER
- CONVERT

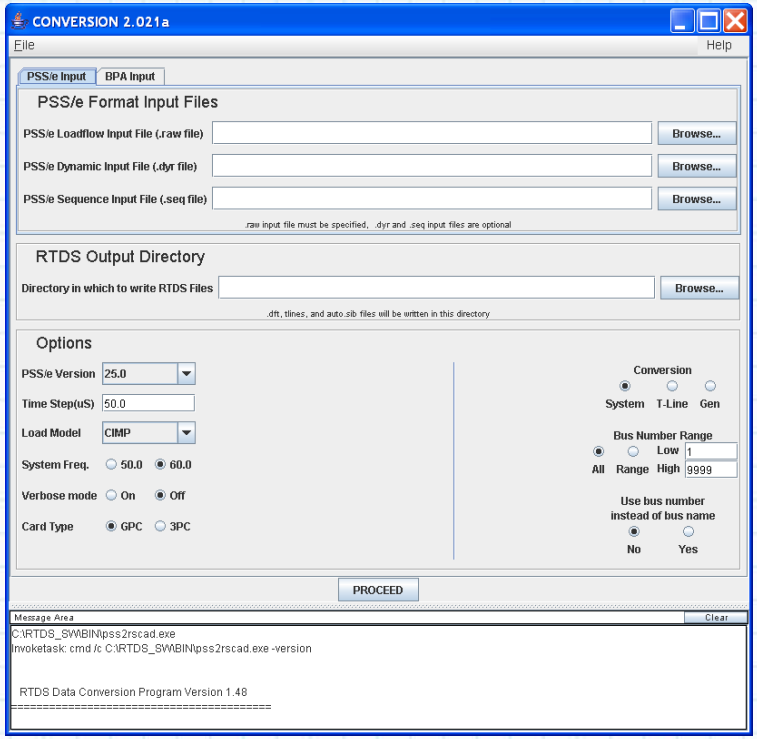

PSS/E file conversion function

BPA file conversion function

SIMULATOR APPLICATIONS

Protection System Testing

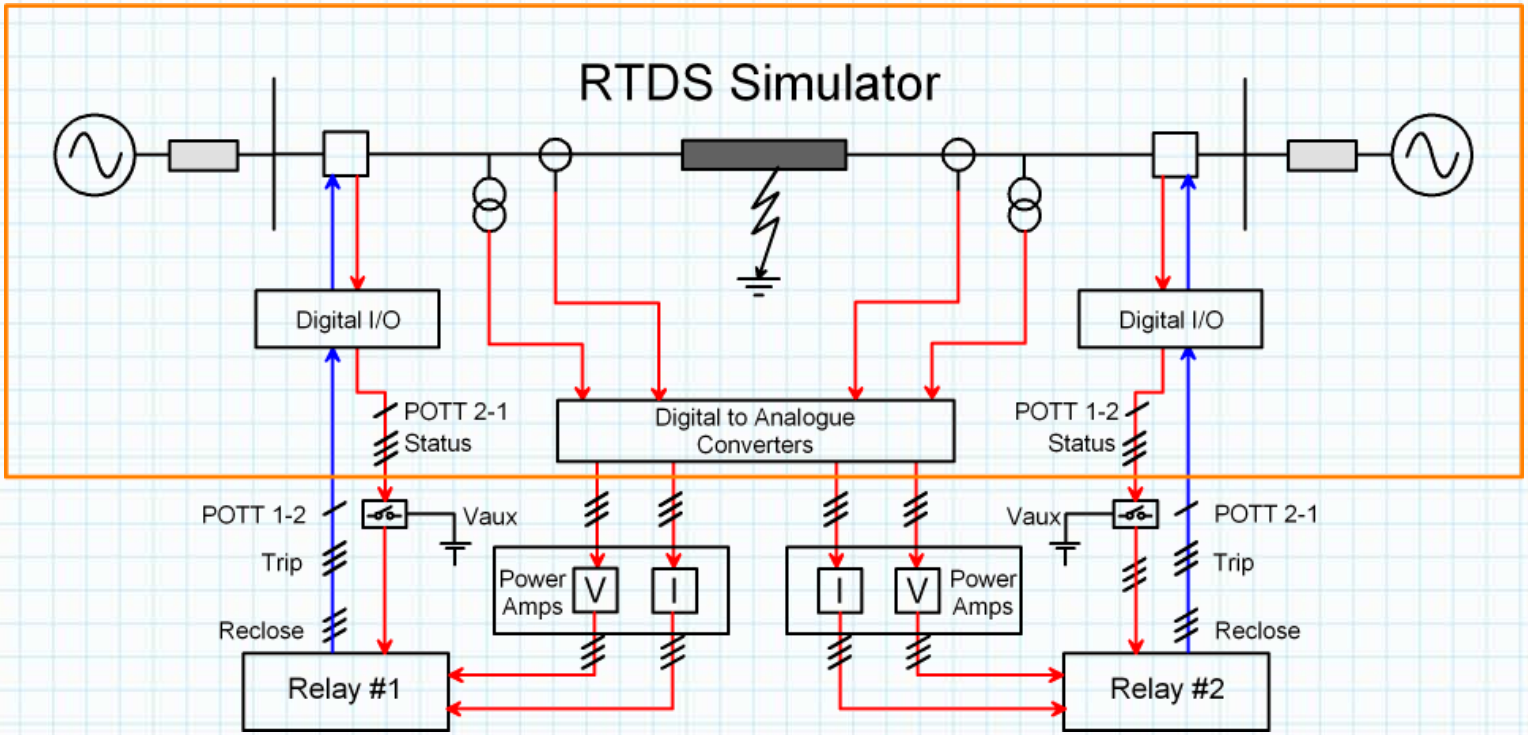

Traditional Relay Test Setup

Protection System Testing

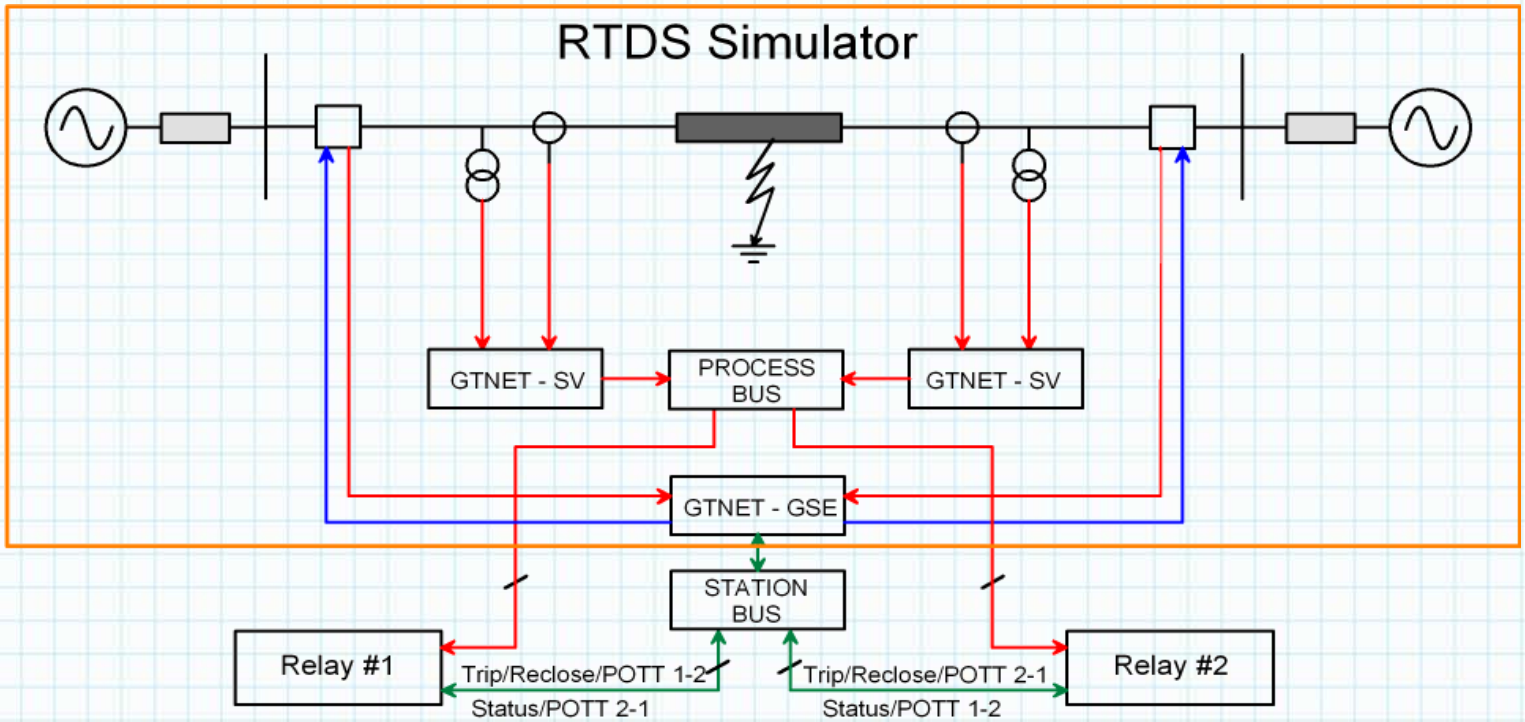

GSE-enabled and SV-enabled Relay Test Setup (IEC 61850)

Protection & Automation

Wide Area Measurement and Control

The RTDS Simulator can be used to either:

1) Simulate a power network so that real *PMUs* can tested.

2) Simulate a power network as well as the data that would be produced by real PMUs in that system using the GTNET card and PMU firmware. The simulated PMU data can then be sent to a *Phasor Data Concentrator* (PDC) where it might be used to test a wide-area control schemes.

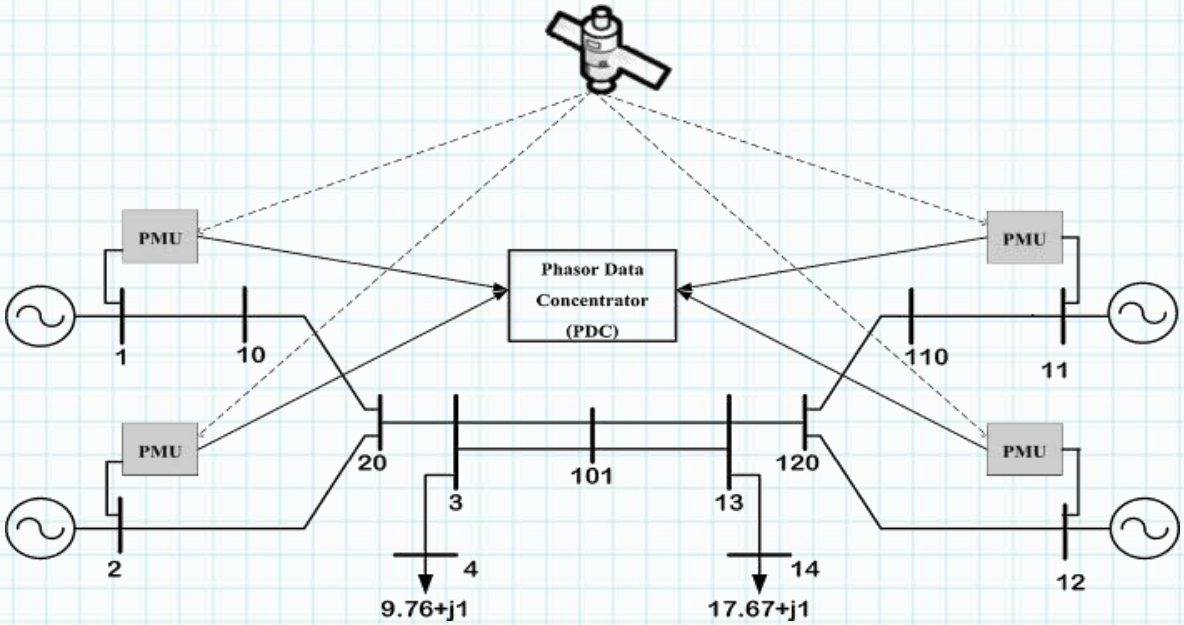

Protection & Automation

Wide Area Measurement and Control

- DTU - SOSPO project
- SCE - C-RAS project
- PG&E - SynchroPhasor Proof of Concept facility

Protection & Automation

Protection and Automation Library

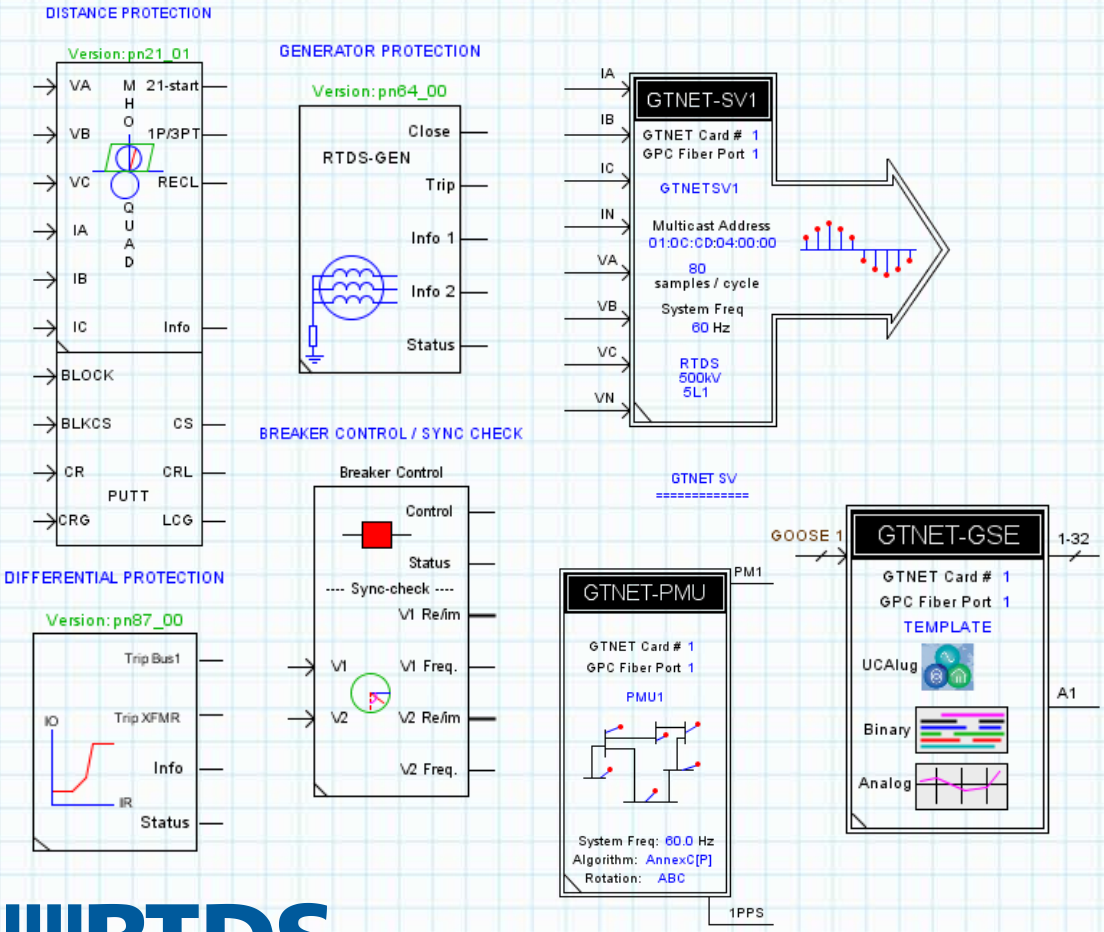

Protective relay models

- Line protection
- Generator protection
- Differential protection
- Overcurrent protection

Automation controllers

- Breaker control and synchro-check
- Tap changer control

PMU models

- 8 PMU models per component
- Designed according to IEEE C37.118

Control System Testing

HVDC (High Voltage Direct Current)

- ❑ Thyristor based schemes using improved firing algorithm
- ❑ Two, three and multi-level VSC based schemes using small time-step sub-networks

SVC (Static VAR Compensator)

TCSC (Thyristor Switched Series Cap.)

STATCOM

- ❑ Two, three and multi-level VSC based schemes using small time-step sub-networks

Generator (Exciter, Governor, PSS)

Smart Grid and DG

The RTDS Simulator's distributed generation models and small time-step facilities are useful to study and research smart grid technologies. These include:

- *Wind generation*
- *Solar Energy*
- *Fuel Cells*
- *Battery Storage*
- *Power Electronic Converters*

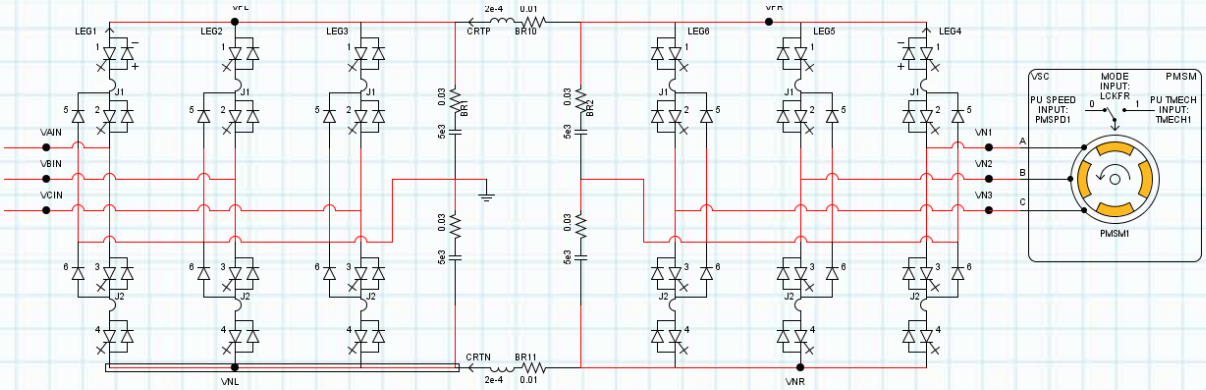

RTDS Technologies

The World Standard for Real Time Digital Power System Simulation

SCADA Systems

The DNP firmware option allows the RTDS to act as a DNP slave using the DNP 3.0 protocol. The support of this protocol allows the RTDS to be used for the testing and validation of SCADA system interfaces used in control centers and generating stations.

Binary simulation status/outputs (i.e. position)
1024 (scan rate 1000 Hz)

Binary simulation control/inputs (i.e. breaker commands)
512 (scan rate 1000 Hz)

Analogue outputs
500 (scan rate 4 Hz)

Analogue inputs
100 (scan rate 4 Hz)

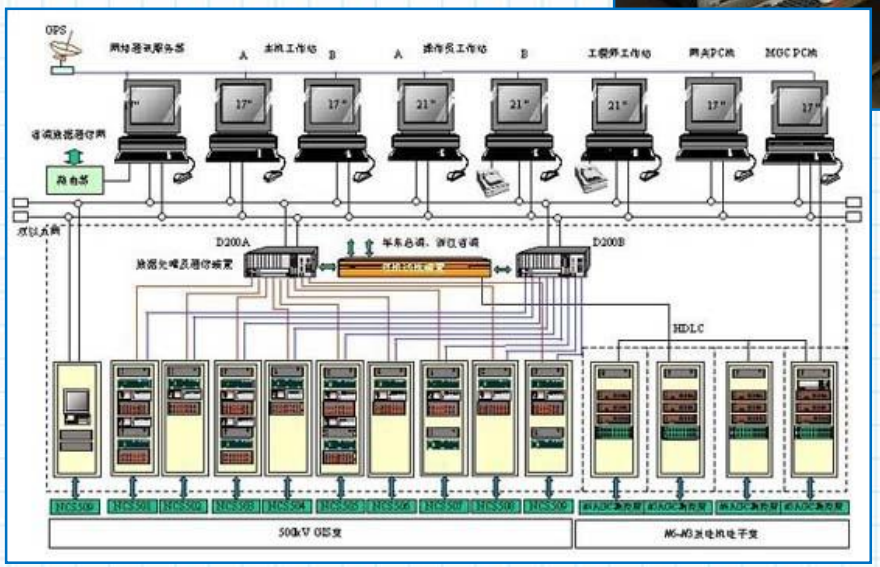

RTDS Technologies

Recent Developments

- *Protection and Automation Library*
- *Small Time-Step Module*

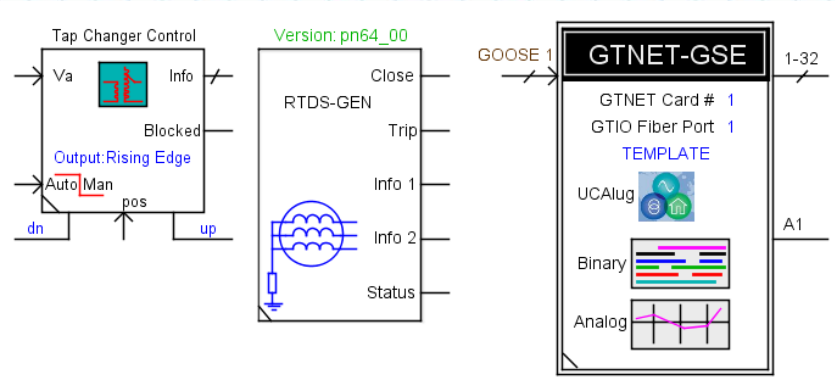

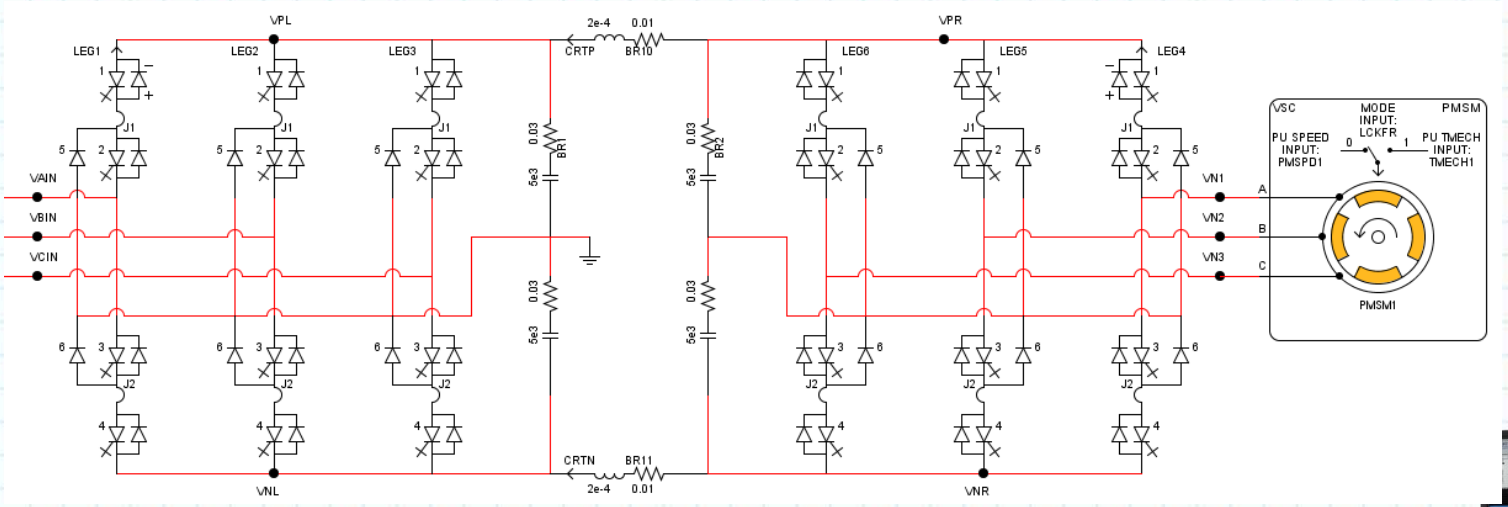

RTDS Technologies

Recent Developments

- *Synchronous Machine Model for Internal Faults*

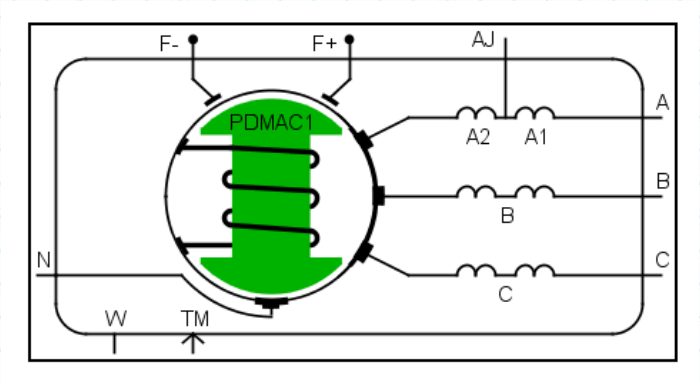

- *PMU model and GTNET-PMU*

-New model to simulate up to 8 PMUs

- GTNET firmware to support output of PMU data in IEEE C37.118 format.

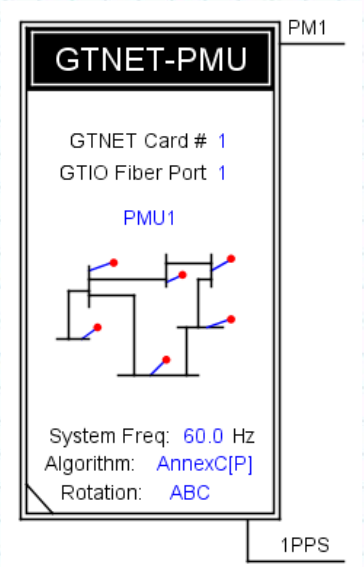

RTDS Technologies

Recent Developments

- *Matlab/Simulink to RSCAD Conversion*
  - Control models only
  - C code generated by Matlab/Simulink Embedded Coder
  - Imported using CBuilder
- *IEC 61870-5-104*
  - New GTNET protocol for SCADA communication
- *GTNET-GSE Enhancements*
  - More flexible IEC 61850 GOOSE message configurations
  - Allows GTNET-GSE to more closely mimic specific devices
- *PMU Test Utility*
  - Standard waveform generator and test panel
- *GTNET SKT*
  - Interface with external software/hardware over a LAN/WAN using TCP or UDP sockets

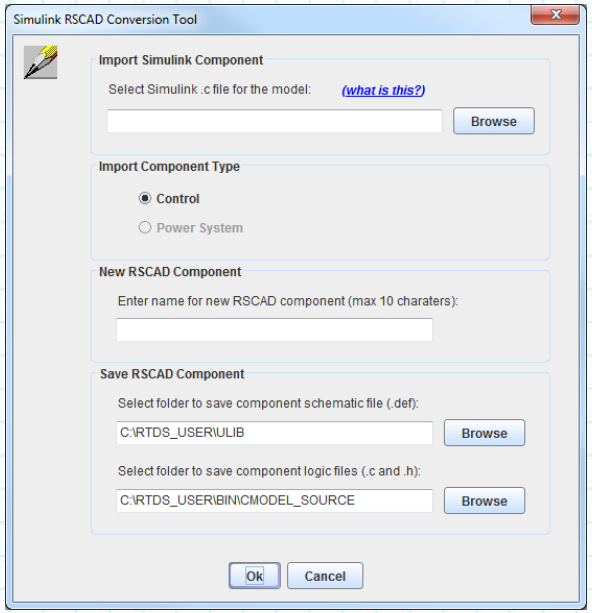

RTDS Technologies

Recent Developments

MMC Valve Model

- HVDC and STATCOM
- Capacitor voltage balancing control is very challenging
- Need to maintain capacitor voltage within tolerance range
- Number of control signals become difficult to manage for large valves
- 500 levels per valve
- 3000 capacitor voltages per station – 6000 for two terminals
- 6000 firing pulses per station - 12,000 for two terminals

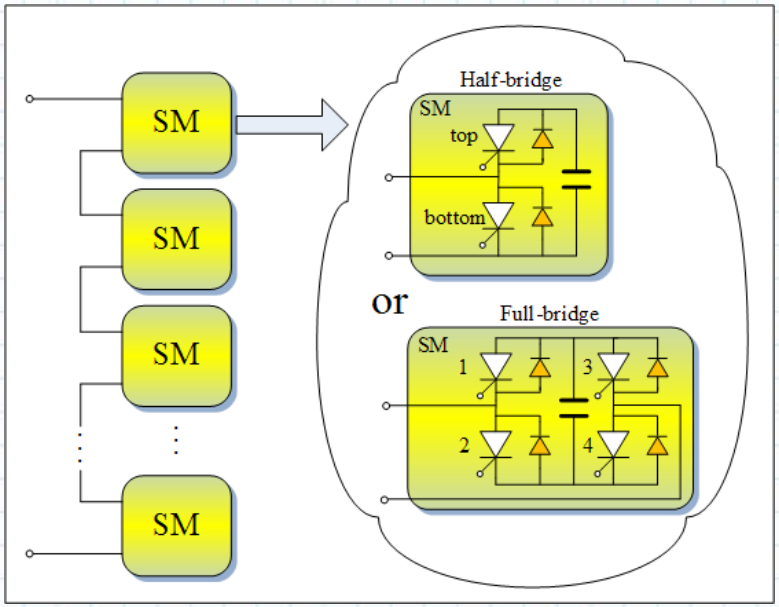

RTDS Technologies

Recent Developments

MMC Valve Model

- *Small timestep subnetwork models*
- *CHAINV5*
  - Processor based with max. 60 submodules per valve
  - Suitable for firing pulse control testing
- *MMC5*
  - Processor based model with maximum 640 submodules per valve
  - Ideal capacitor voltage balancing control included in model
  - Not suitable for firing pulse control testing, but very useful for high level and system performance studies
- *FPGA_U5*
  - FPGA based model with maximum 512 submodules per valve
  - MMC Support Unit required
  - Suitable for firing pulse control testing
  - Communication with controls via Aurora serial protocol
  - Capacitor voltage balancing and firing pulse control also available

RTDS Technologies

Recent Developments

MMC Valve Model

- *FPGA_GM*
  - FPGA based model with maximum 512 submodules per valve
  - MMC Support Unit required
  - Supported on the VC707 board only
  - Each board able to model 2 valves (legs), 512 SMs per valve
  - Suitable for firing pulse control testing
  - Capacitor voltage balancing and firing pulse control also available
  - Individual SM capacitance and discharge resistance
  - More internal faults

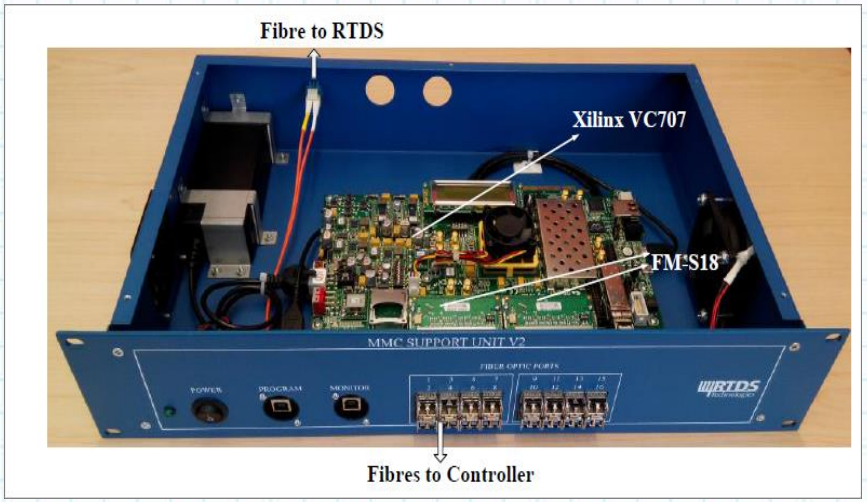

RTDS Technologies

Recent Developments

MMC Valve Model

- *Hybrid HVDC Breaker Model*
  - Forward and Bi-Directional Operation

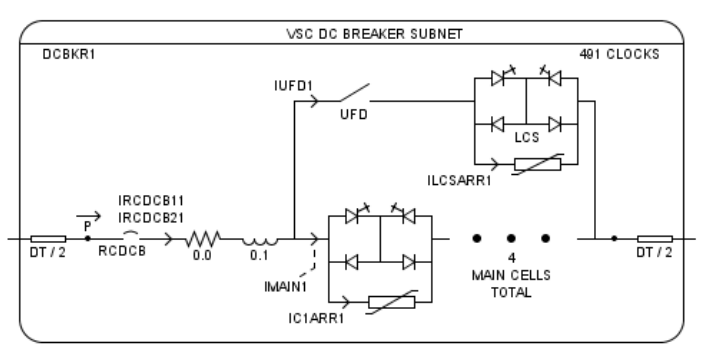

- *Small time-step internal sub-step models*
  - 2-5 steps in Every Small Time-Step
  - Direct Connection to GTDI

RTDS Technologies

Conclusions

- *Current state of the simulator is very open and flexible*
- *Has most of the communication protocols needed for cyber physical system simulation*
- *Platform allows for custom implementation and interfacing of new protocols*
- *Development is driven by user requirements and new applications*

RTDS Technologies Inc.

Additional Information:

Our website

www.rtds.com

Technical publications

- Multiple volumes of published papers available dating back to 1991

RTDS Technologies welcomes any questions or comments.

Please do not hesitate before, during and after installation to contact us.

QUESTIONS ???