# Upgrades to the CAPS PHIL Facility - Selected Experiments with the new 5 MW MVDC Lab

Michael “Mischa” Steurer
Center for Advanced Power Systems
Florida State University
Tallahassee, FL, USA

November 5th, 2015

# 15 Years of CHIL & PHIL at CAPS

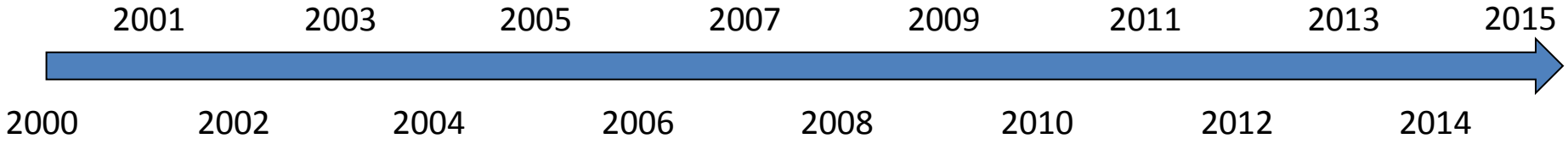

# 15 Years of CHIL & PHIL at CAPS

CAPS in NHMFL

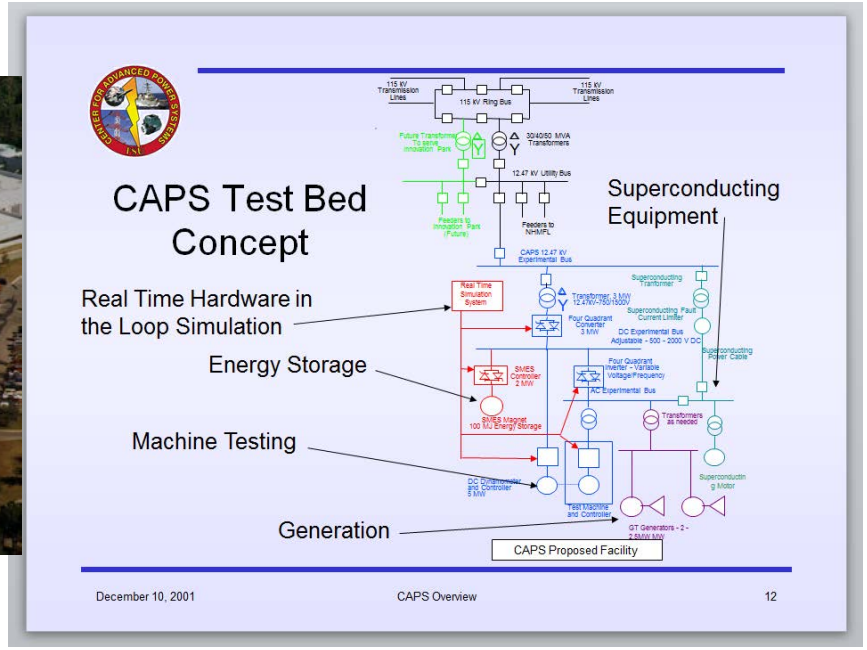


2001 2003 2005 2007 2009 2011 2013 2015

2000 2002 2004 2006 2008 2010 2012 2014

# 15 Years of CHIL & PHIL at CAPS

Braking Ground for new CAPS Facility

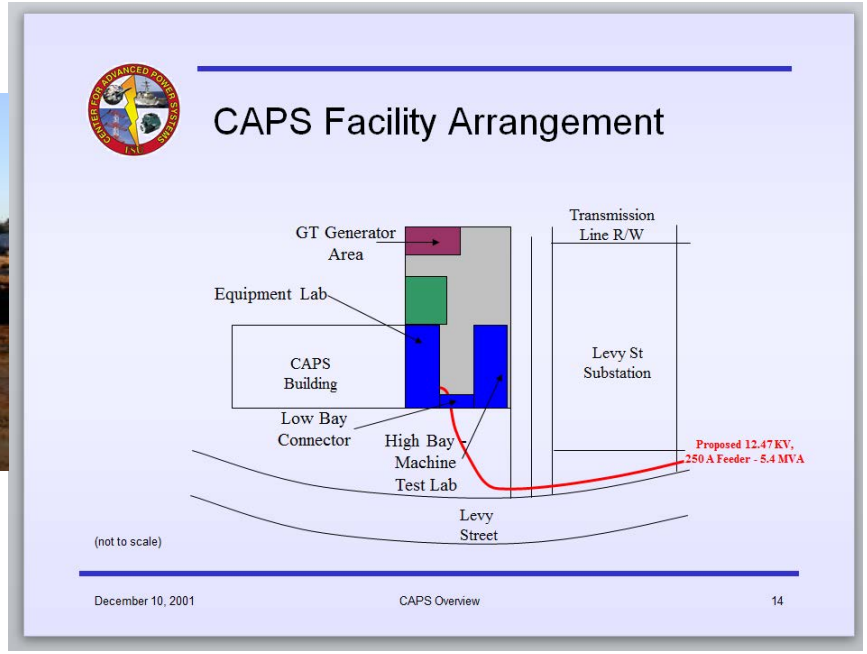

2001 2003 2005 2007 2009 2011 2013 2015

2000 2002 2004 2006 2008 2010 2012 2014

# 15 Years of CHIL & PHIL at CAPS

First 4 RTDS Racks at CAPS

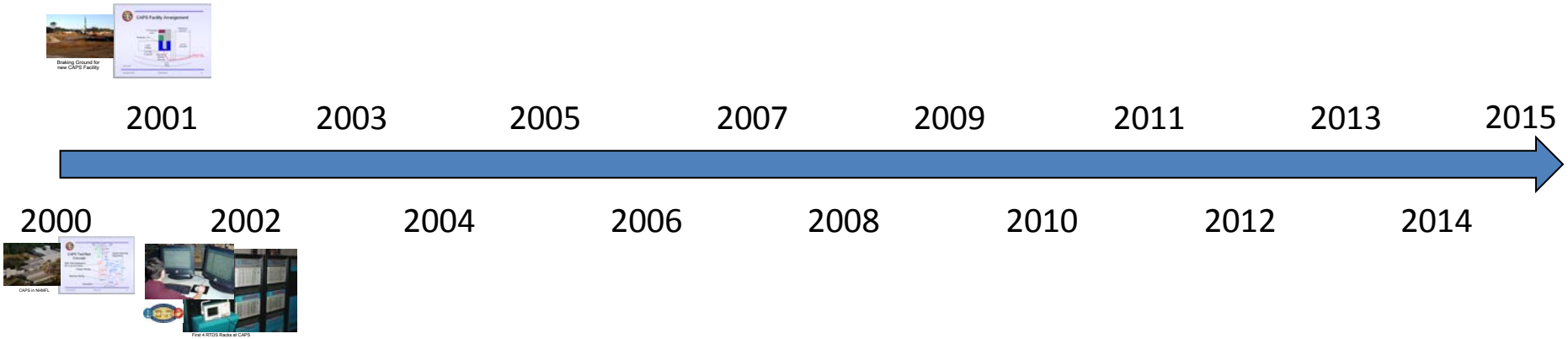

# 15 Years of CHIL & PHIL at CAPS

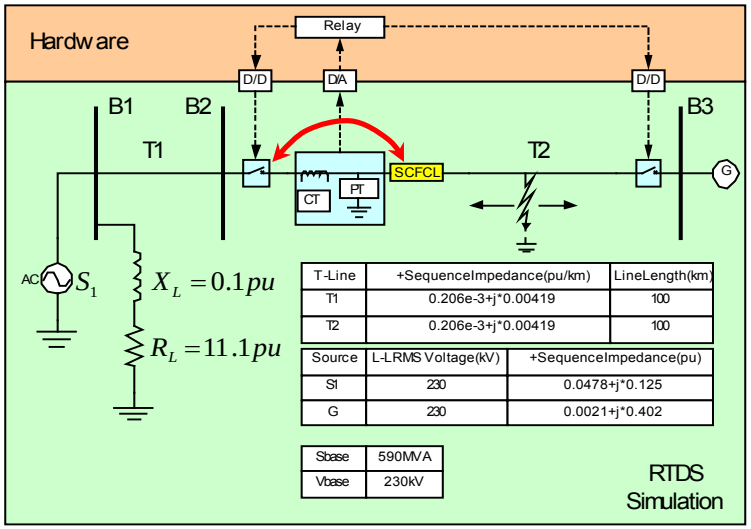


| T-Line | +SequenceImpedance(pu/km) | LineLength(km) |
|---|---|---|
| T1 | 0.206e-3+j*0.00419 | 100 |
| T2 | 0.206e-3+j*0.00419 | 100 |

| Source | L-LRMS Voltage(kV) | +SequenceImpedance(pu) |
|---|---|---|
| SI | 230 | 0.0478+j*0.125 |
| G | 230 | 0.0021+j*0.402 |

| Sbase | 590MVA |
|---|---|
| Vbase | 230kV |

FCL in downstream of PTs and CTs
=> Relay trips appropriately

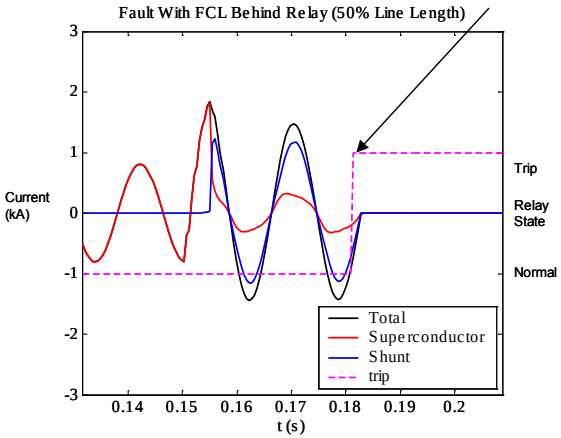


## Distance Relay and Fault Current Limiter

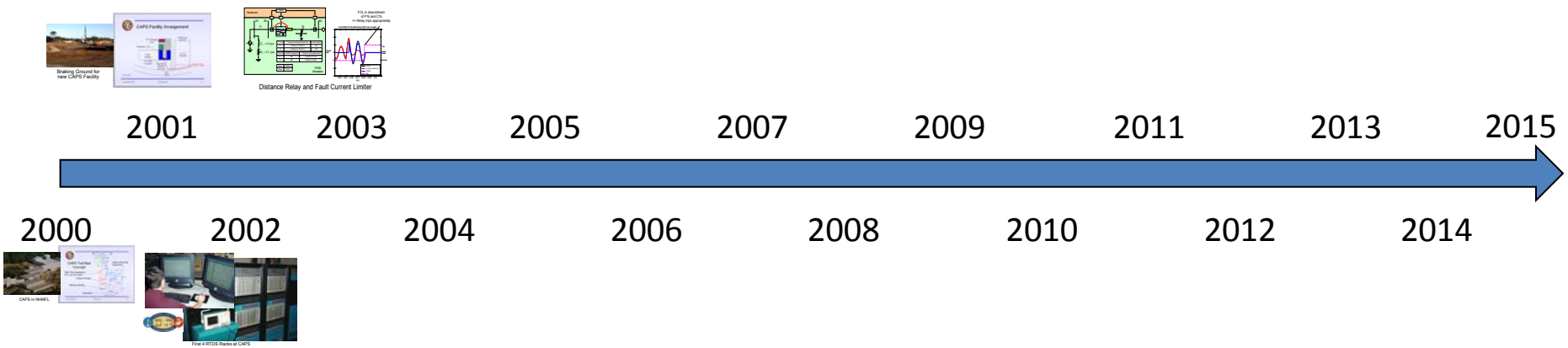

# 15 Years of CHIL & PHIL at CAPS

Newly adapted "***damping impedance method***" (DIM) interface maintains stability even during transients

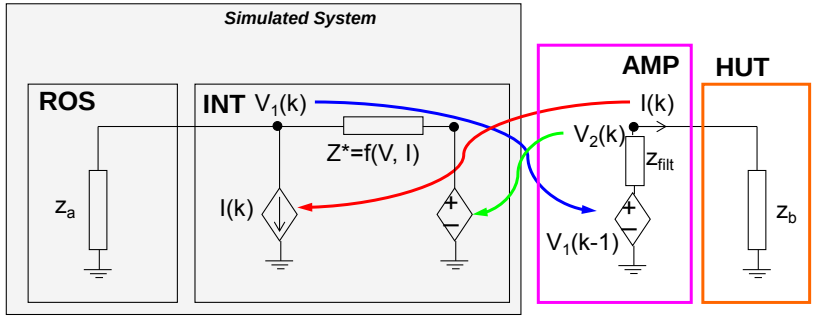


Experimental results from 50 kW PEBB system

Generator current during shedding the base load (DIM)

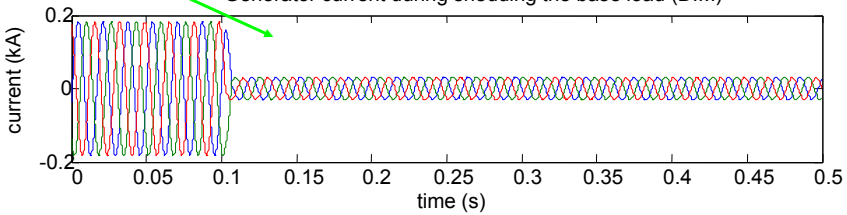


Testing PHIL Interface Algorithms

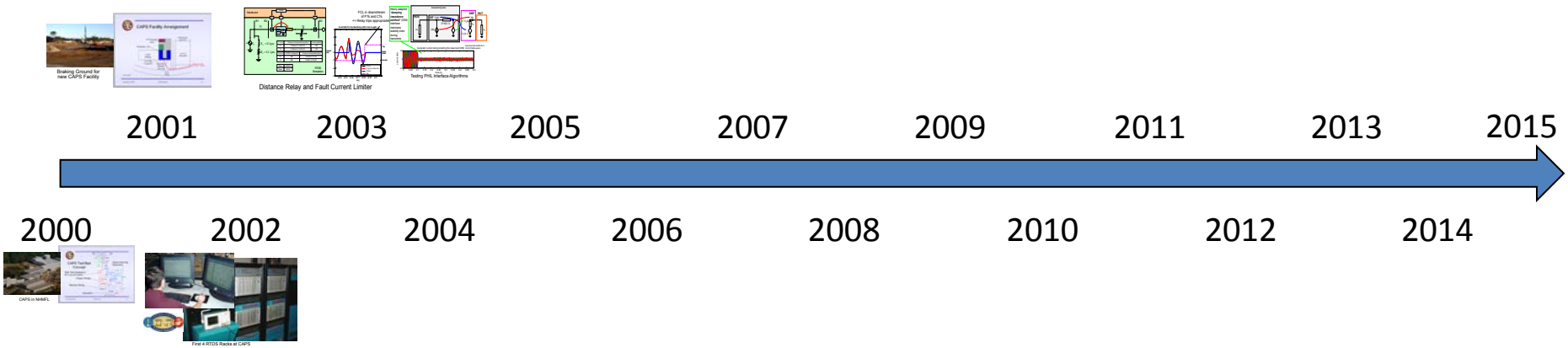

# 15 Years of CHIL & PHIL at CAPS

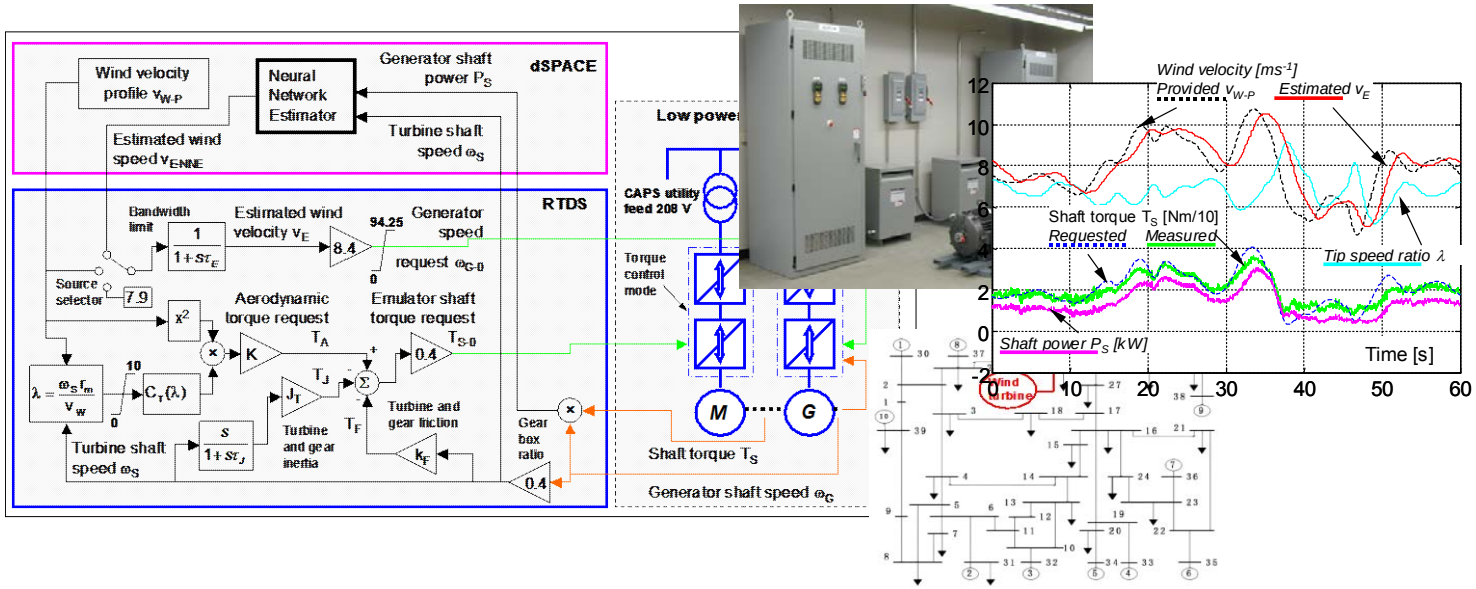


PHIL of Wind-Turbine Generator, RTDS + dSpace

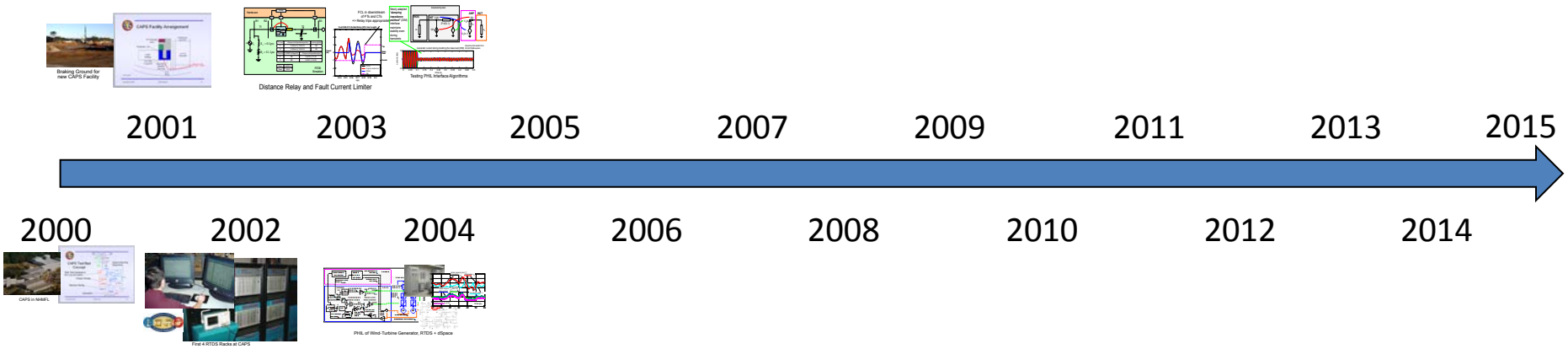

# 15 Years of CHIL & PHIL at CAPS

Complete 14 RTDS Installation at CAPS

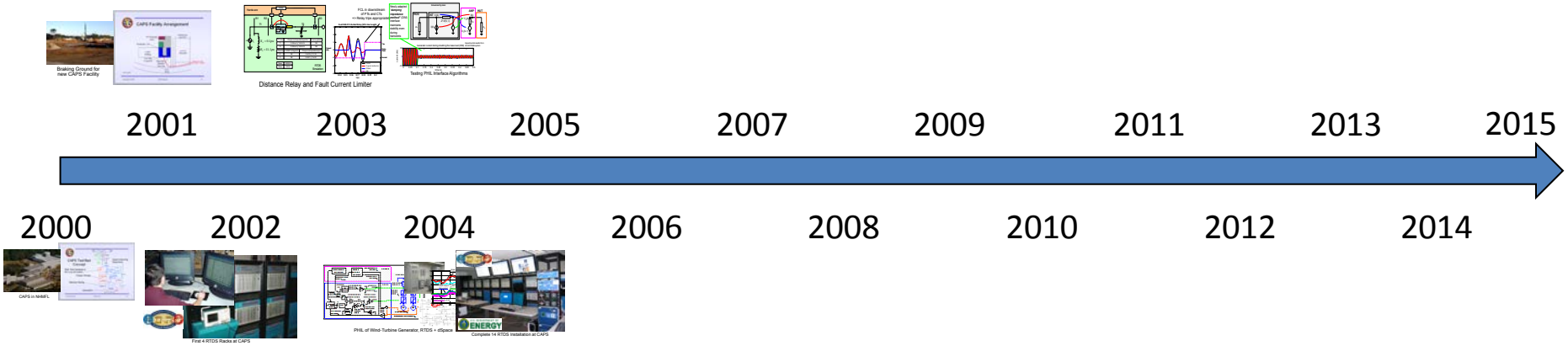

# 15 Years of CHIL & PHIL at CAPS

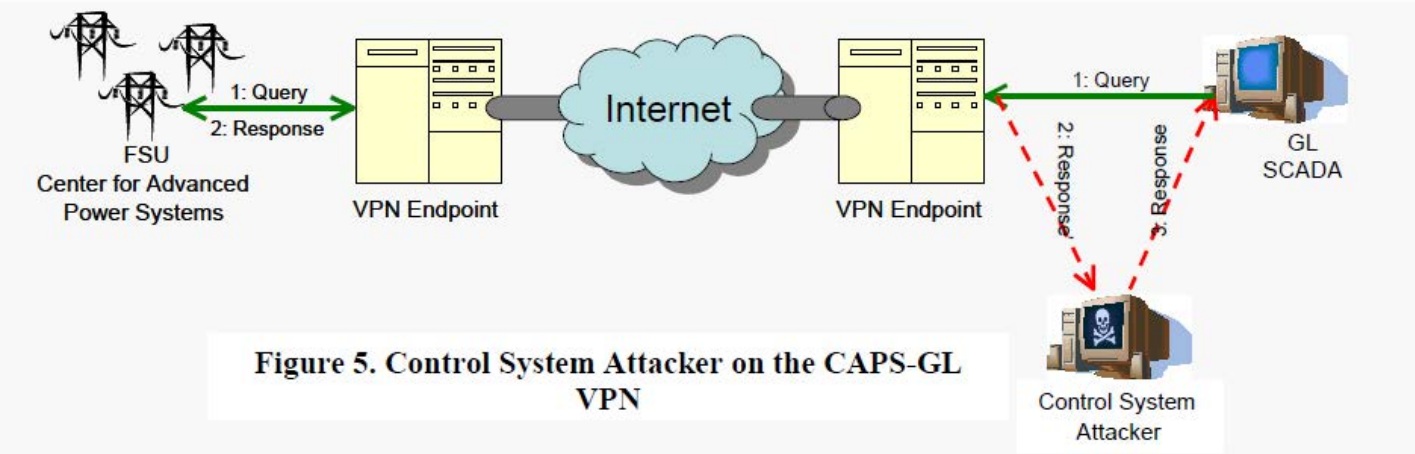


**Figure 5. Control System Attacker on the CAPS-GL VPN**

First Geographically Distributed SACADA to RTDS Testing (SNL & CAPS)

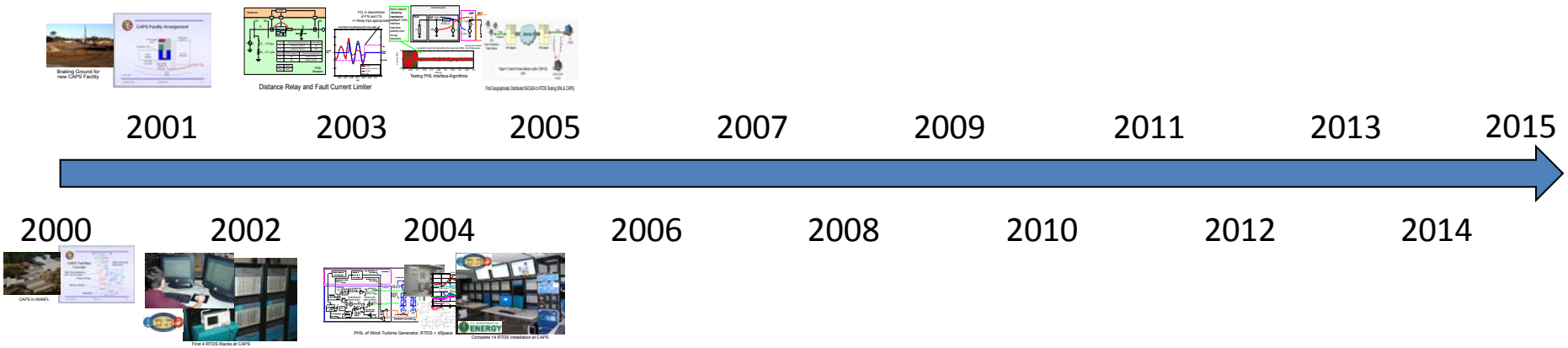

# 15 Years of CHIL & PHIL at CAPS

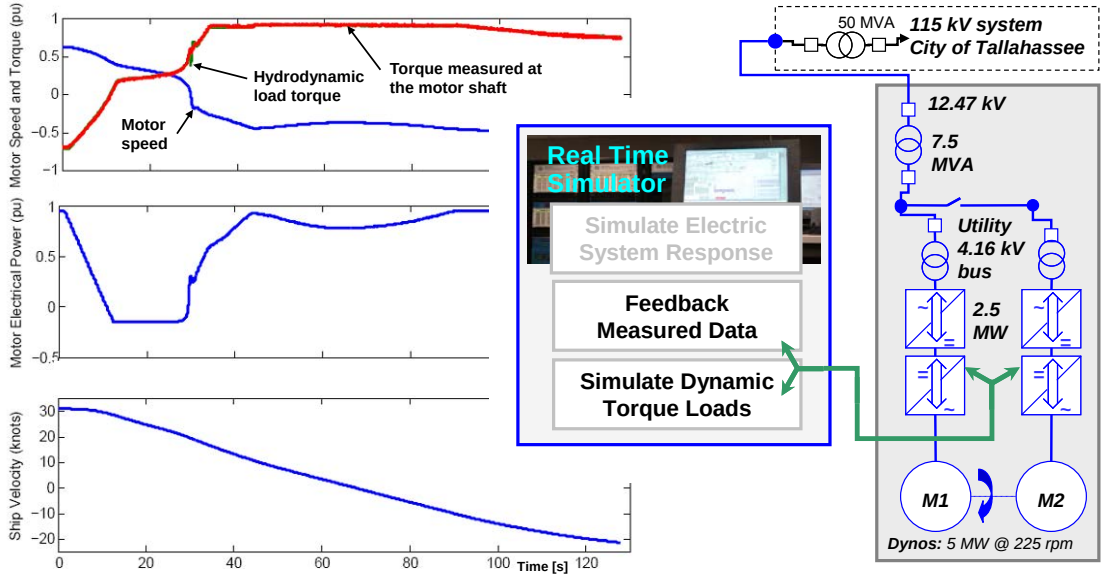


First MW scale PHIL of Ship "Crashback" Maneuver

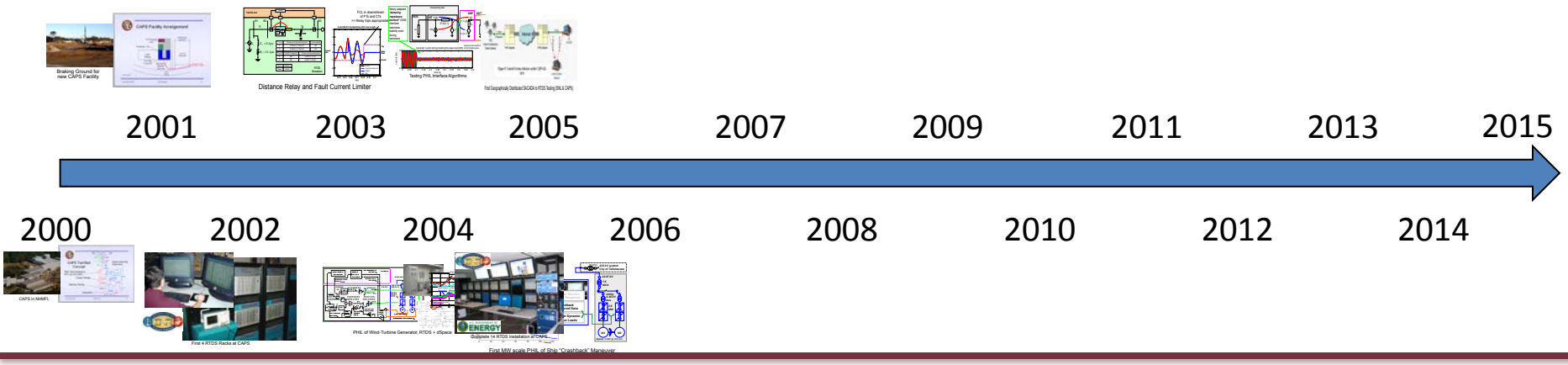

# 15 Years of CHIL & PHIL at CAPS

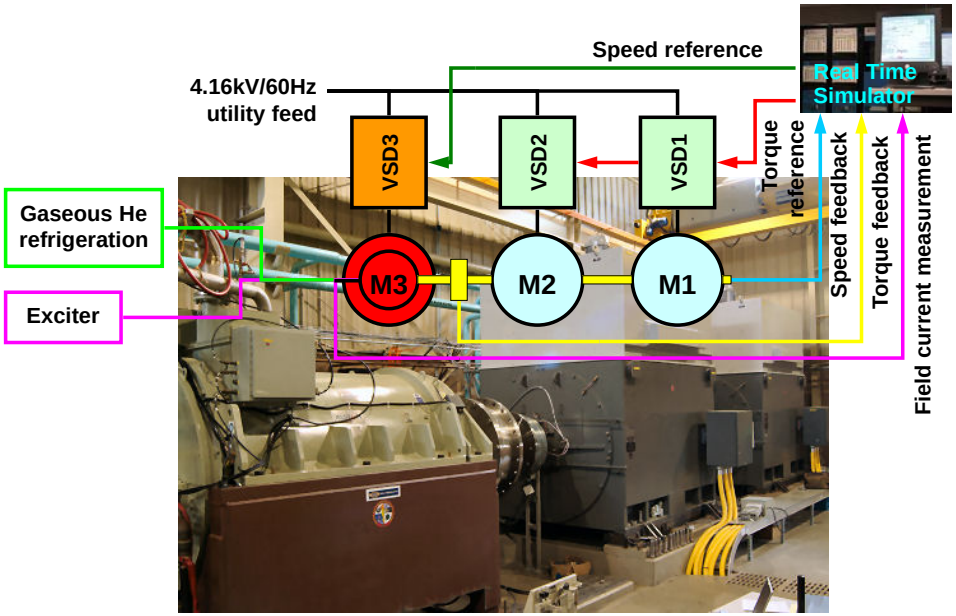


First PHIL with 5 MW HTS Ship Propulsion Motor

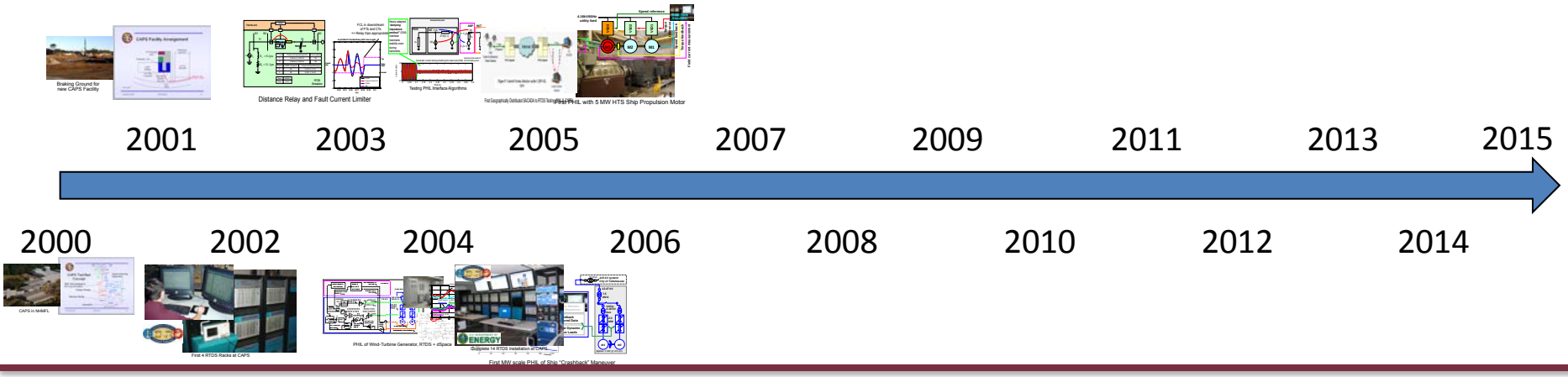

# 15 Years of CHIL & PHIL at CAPS

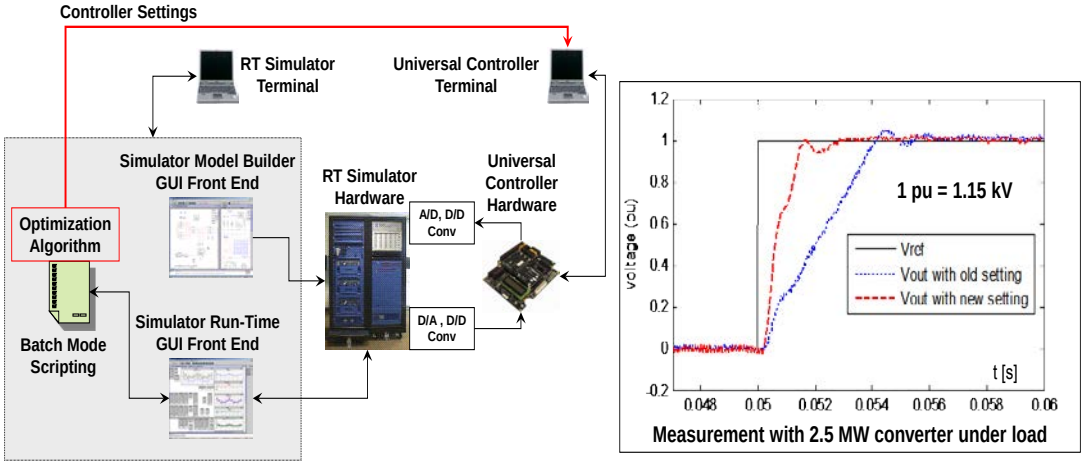


CHIL for Optimizing VVS Controller

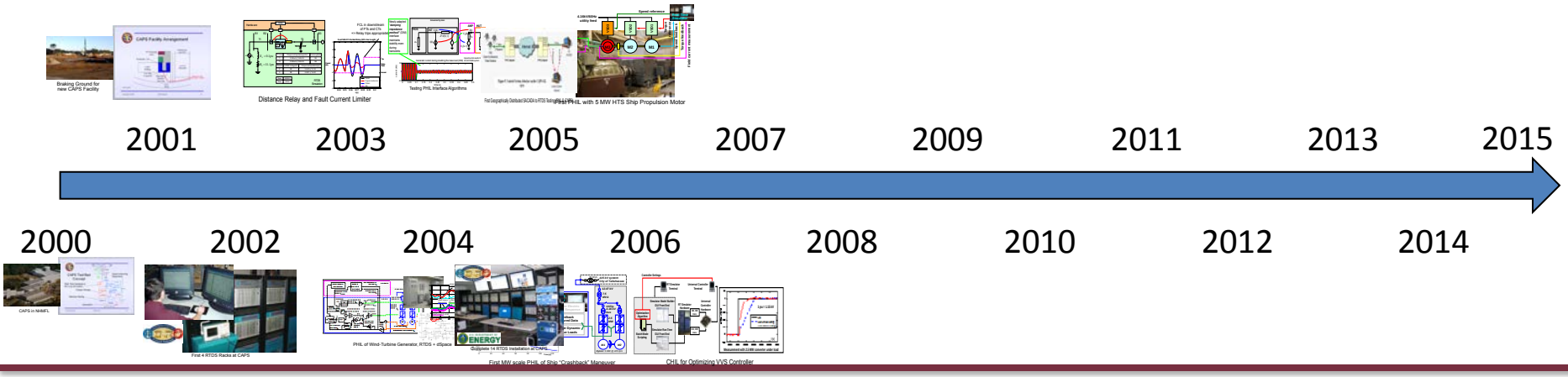

# 15 Years of CHIL & PHIL at CAPS

Commissioning 5 MW Variable Voltage Source
"VVS" System: 4.16 (8.2) $kV_{AC}$ & 1.1 $kV_{DC}$

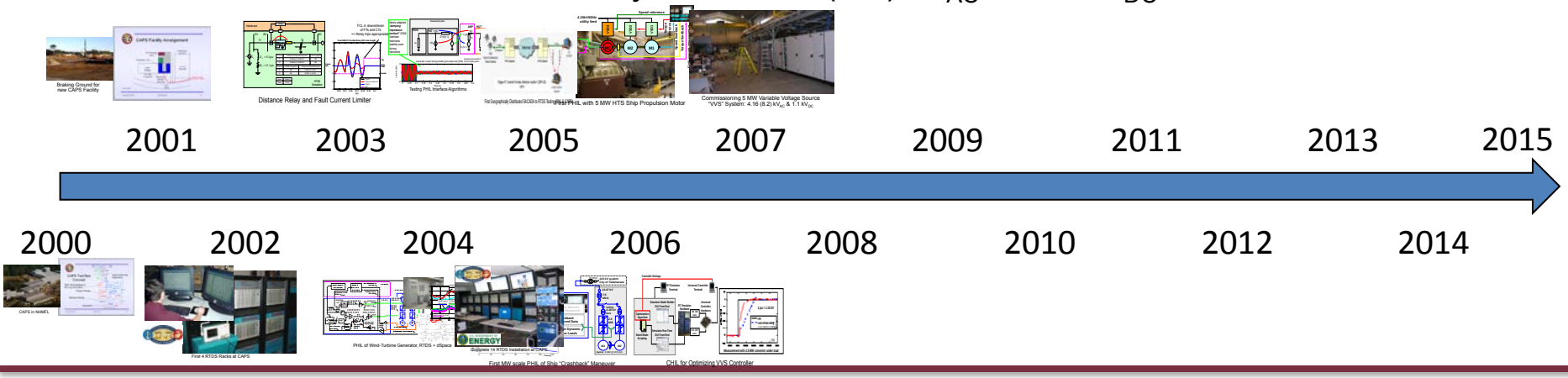

# 15 Years of CHIL & PHIL at CAPS

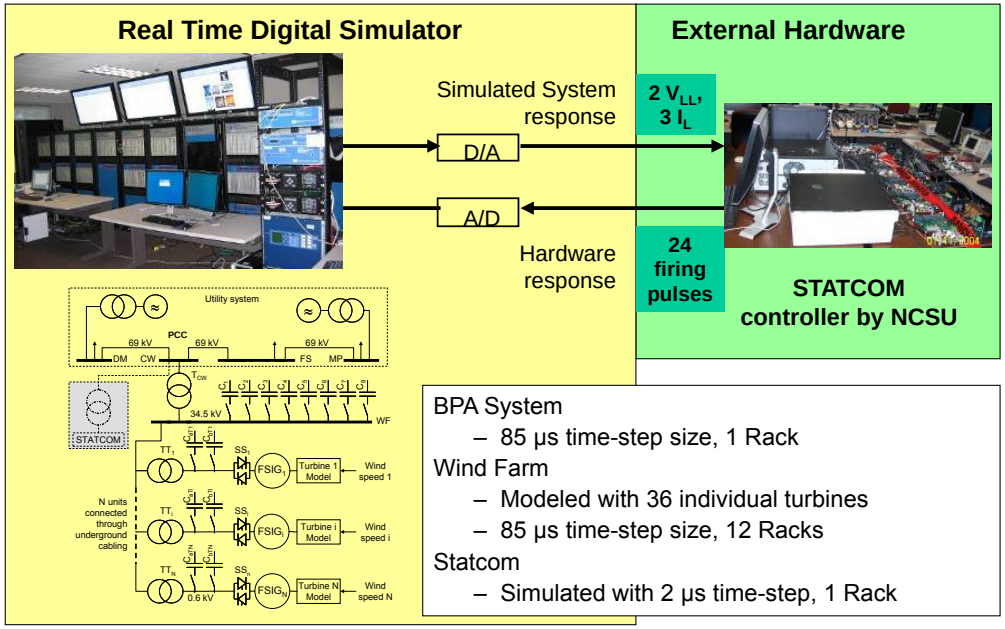


CHIL Testing of Windfarm STATCOM Controller

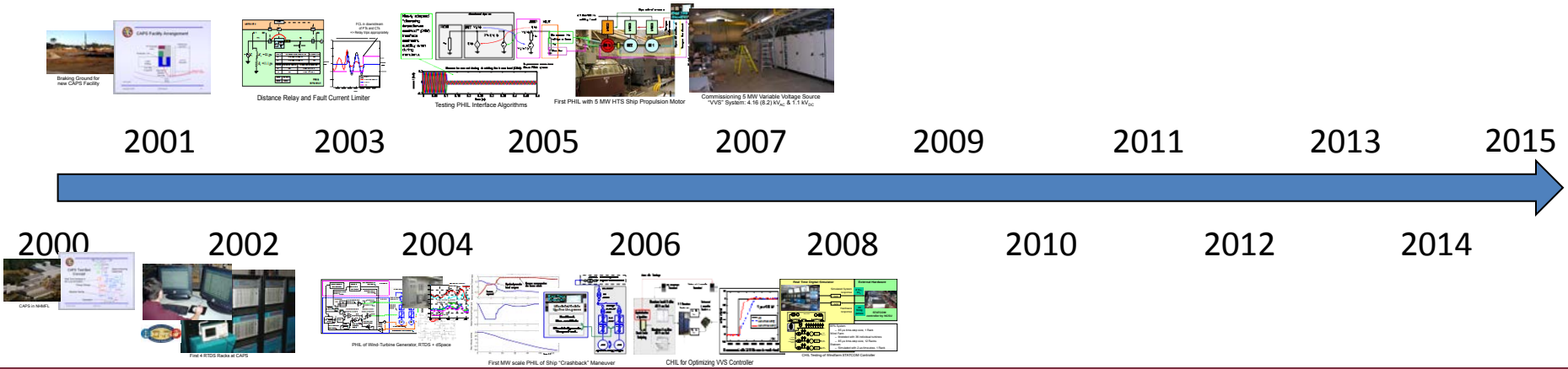

# 15 Years of CHIL & PHIL at CAPS

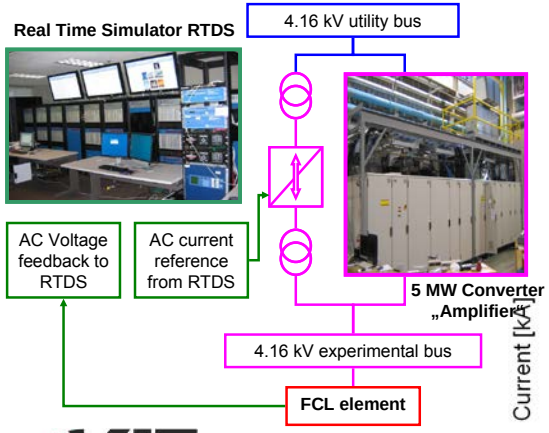


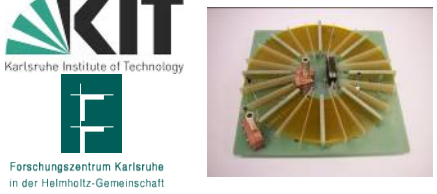

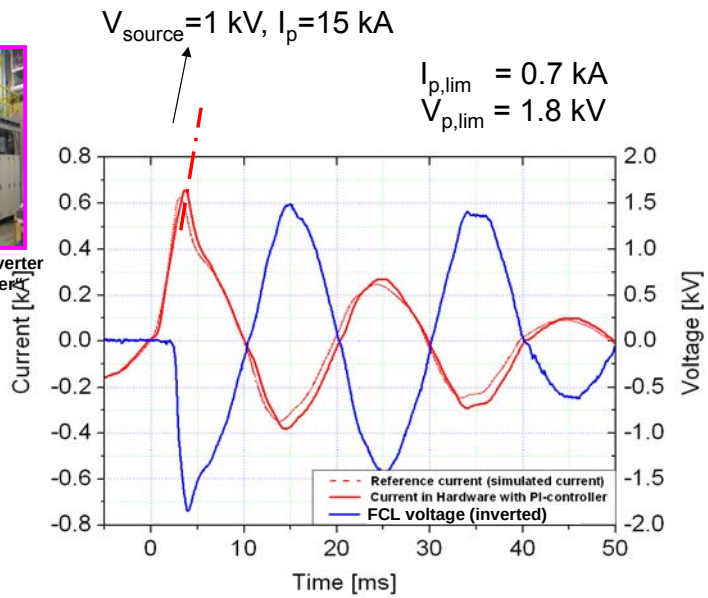


First MW scale PHIL experiments with FCLs at <u>medium voltage</u>

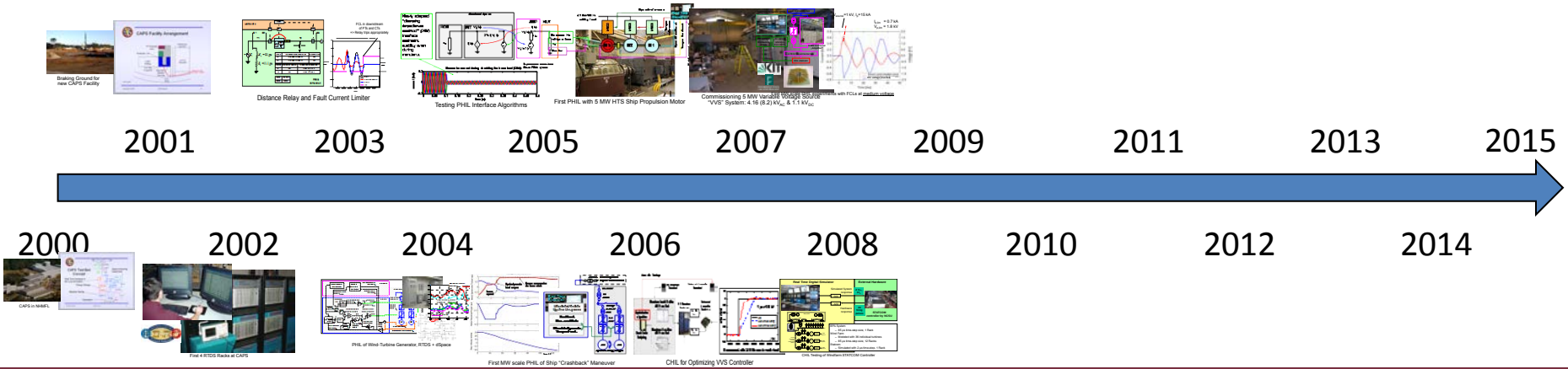

# 15 Years of CHIL & PHIL at CAPS

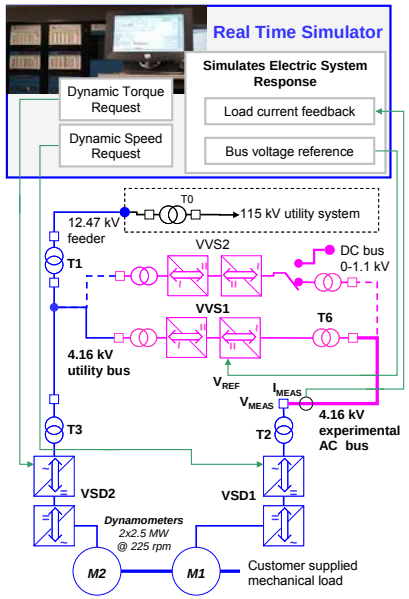


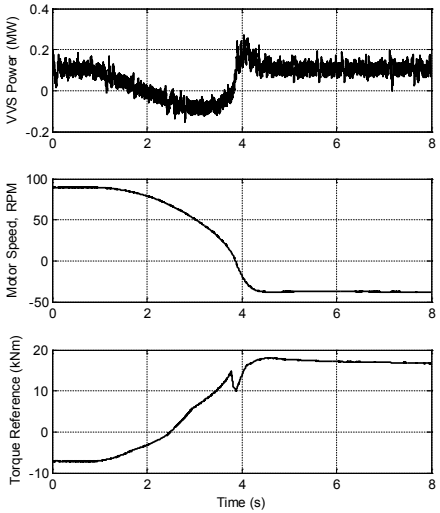


First MW scale PHIL experiments with motor drive at medium voltage

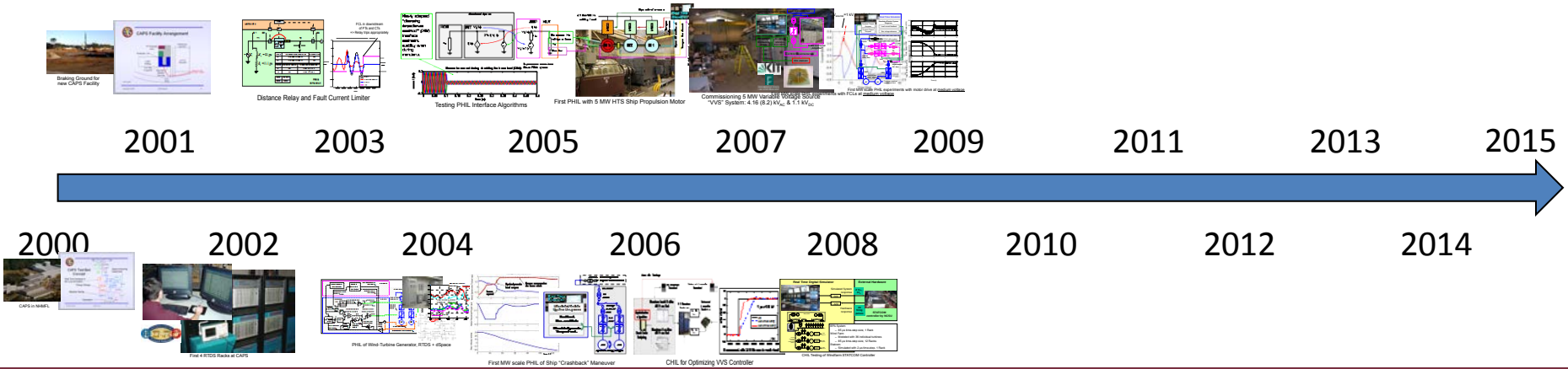

# 15 Years of CHIL & PHIL at CAPS

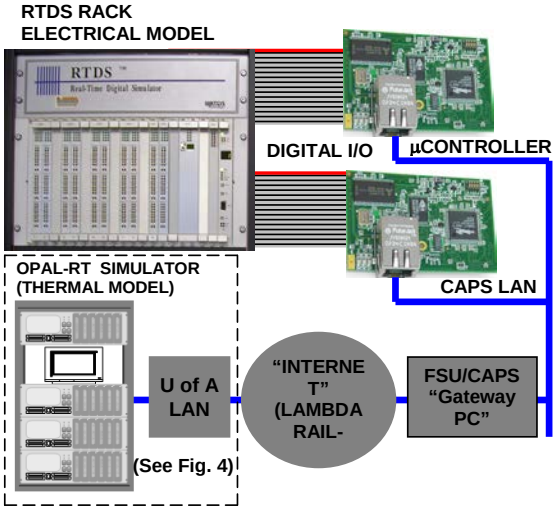


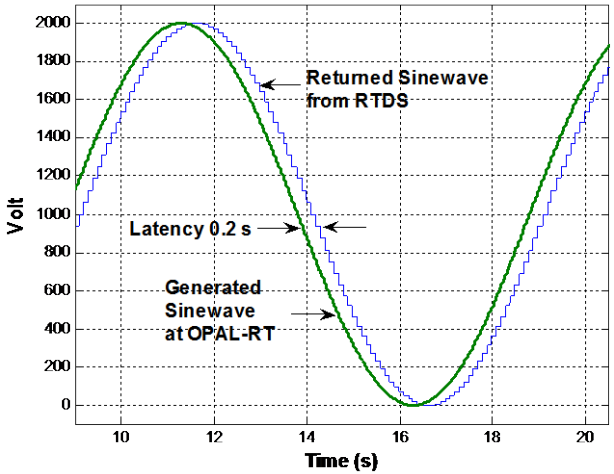


Geographically Distributed
Electro-Thermal CoSim w/ OPAL-RT

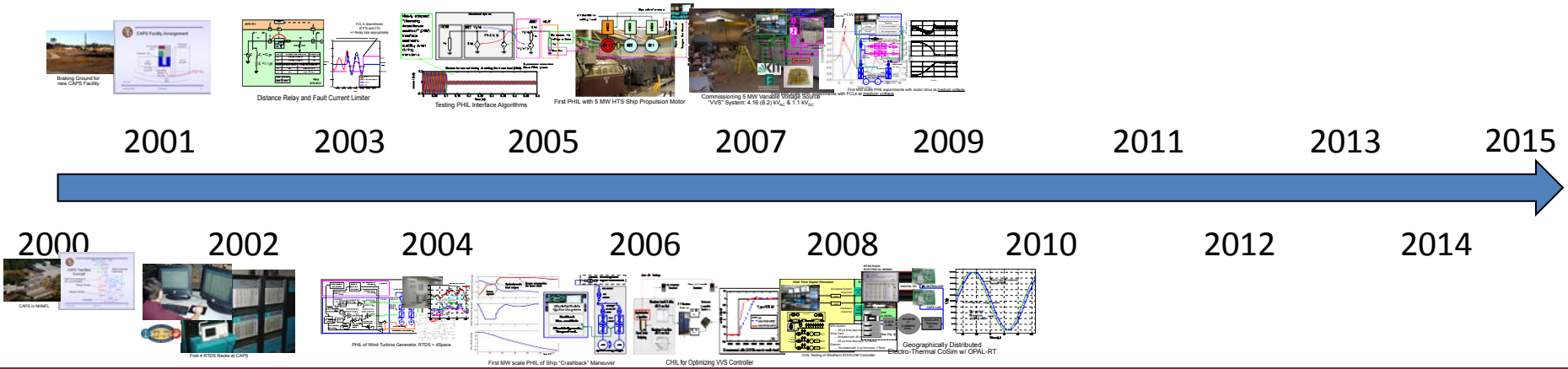

# 15 Years of CHIL & PHIL at CAPS

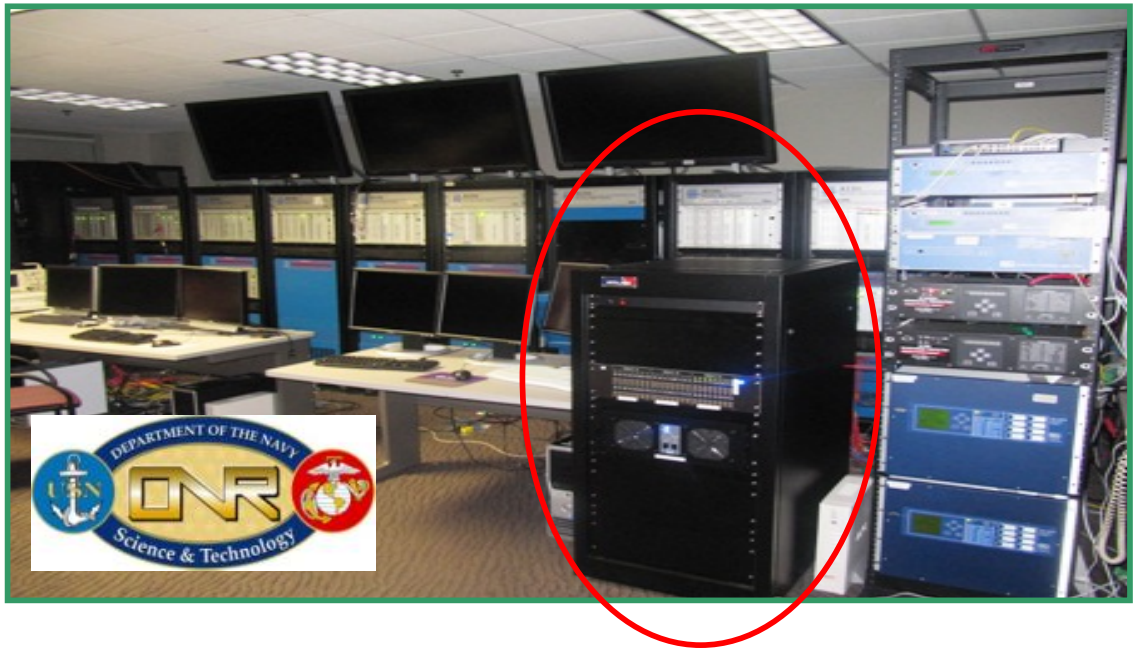


First OPAL-RT at CAPS

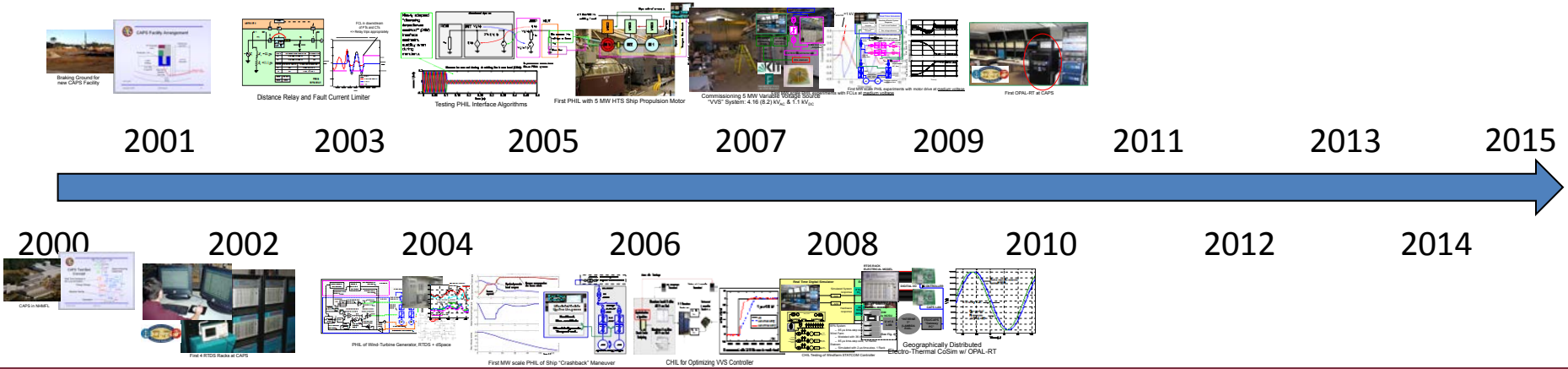

# 15 Years of CHIL & PHIL at CAPS

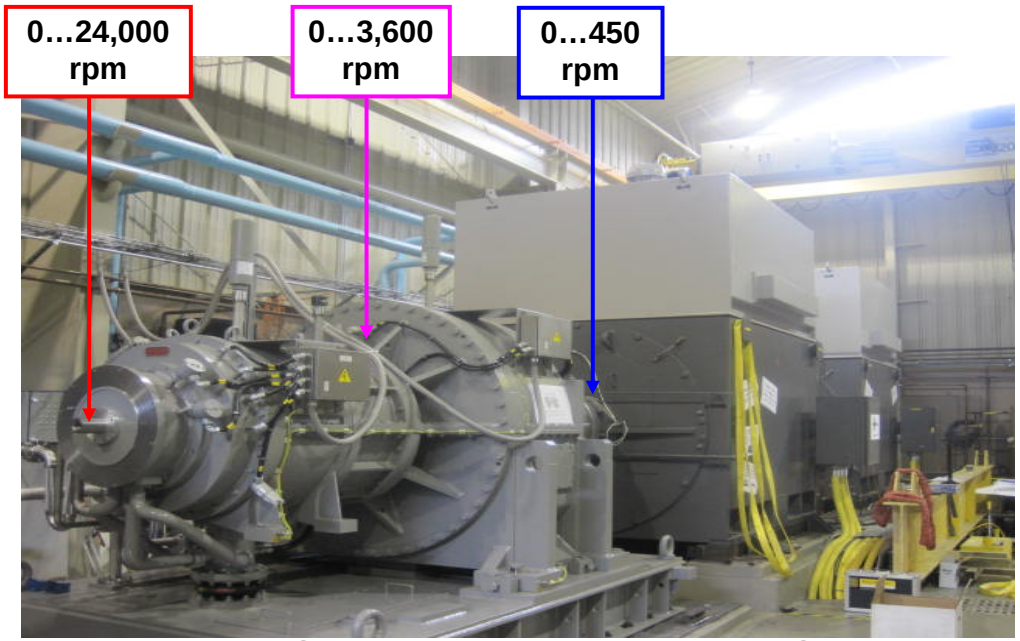


High Speed Machinery Test Stand

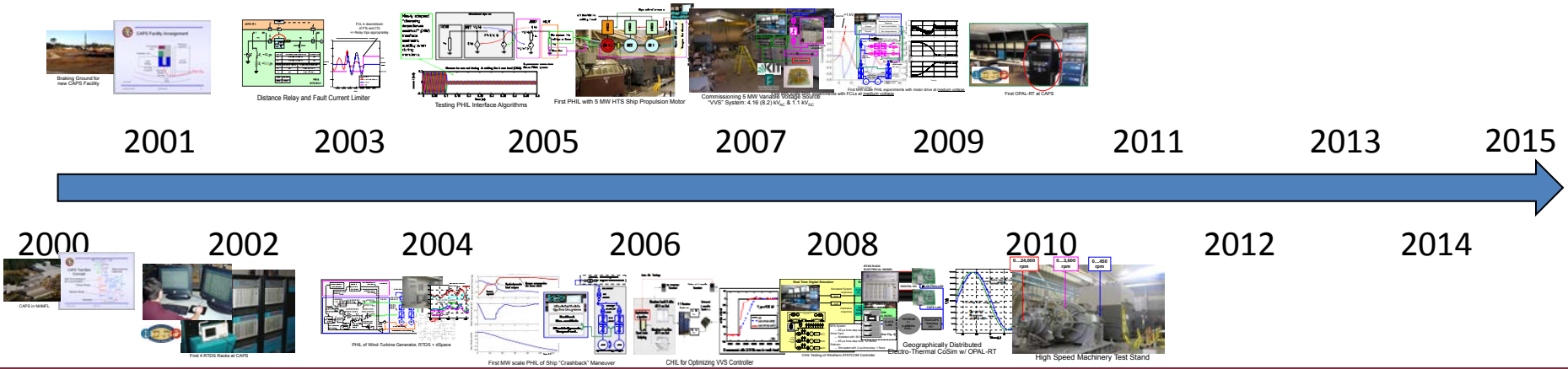

# 15 Years of CHIL & PHIL at CAPS

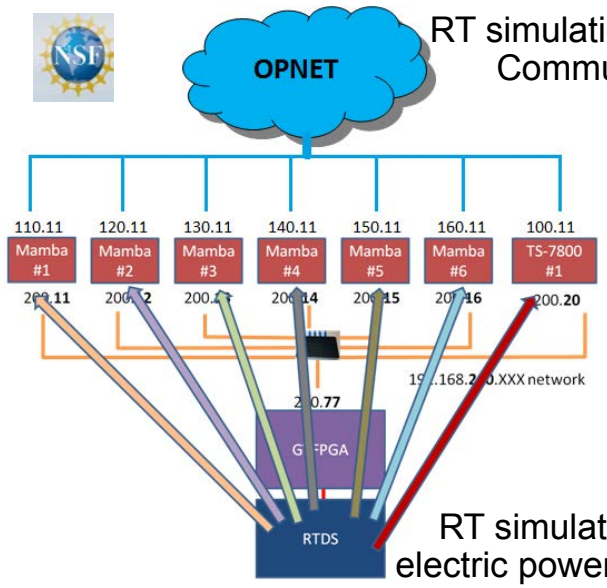


RT simulation of Controls Communications

Distributed Controls (DC) computing layer

Fast data links between DC and power components: RT simulator specific

RT simulation of electric power system

## Cyber-Physical RT Simulation Test Bed

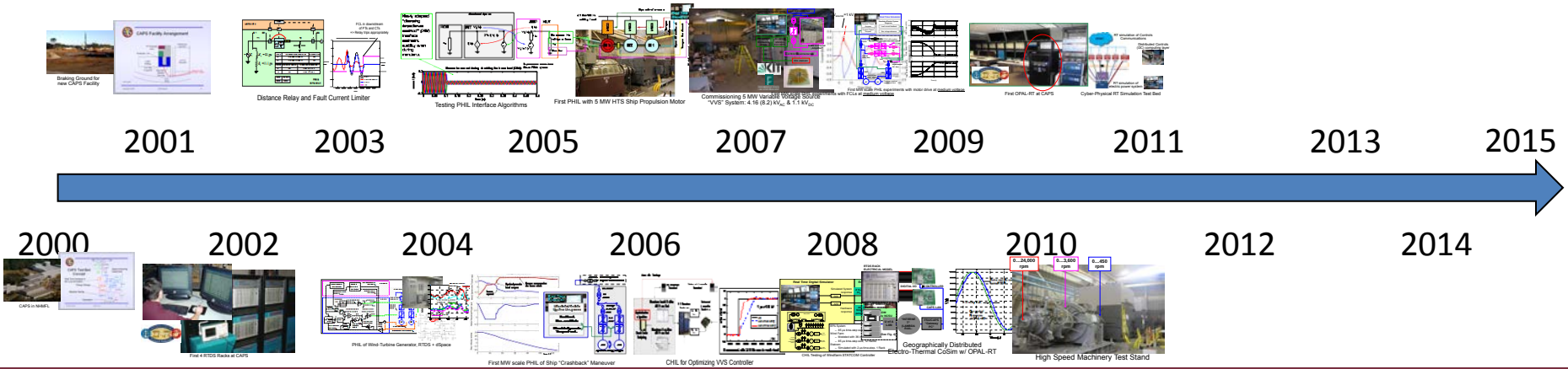

# 15 Years of CHIL & PHIL at CAPS

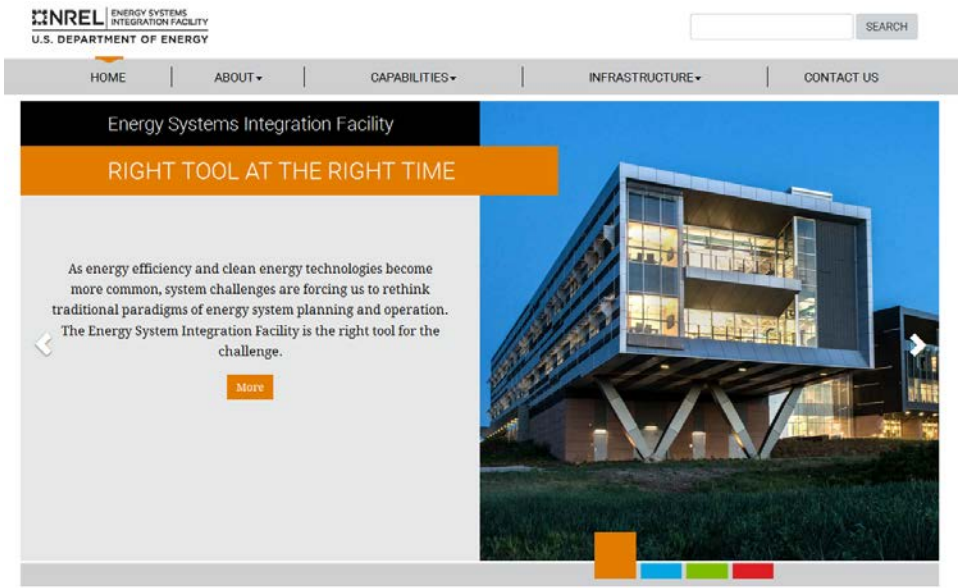


Grand Opening NREL - ESIF

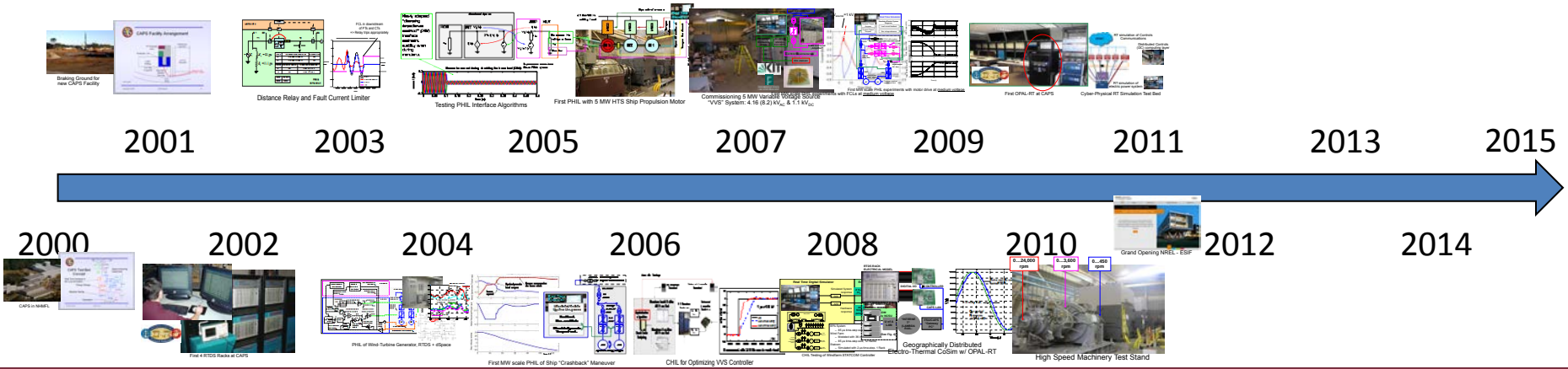

# 15 Years of CHIL & PHIL at CAPS

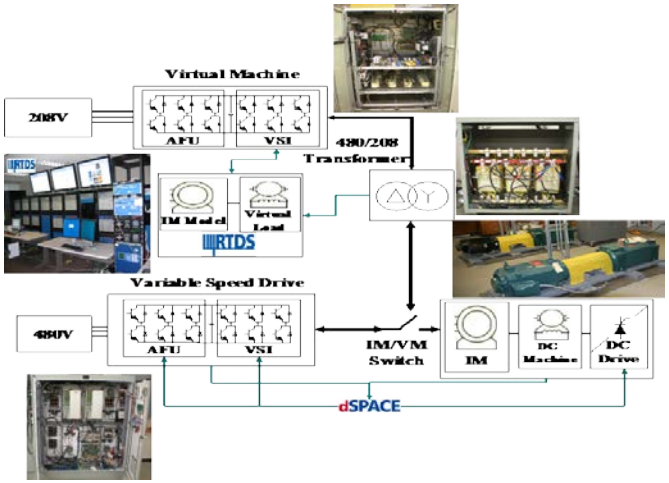


10kW class "Virtual" Motor Demo

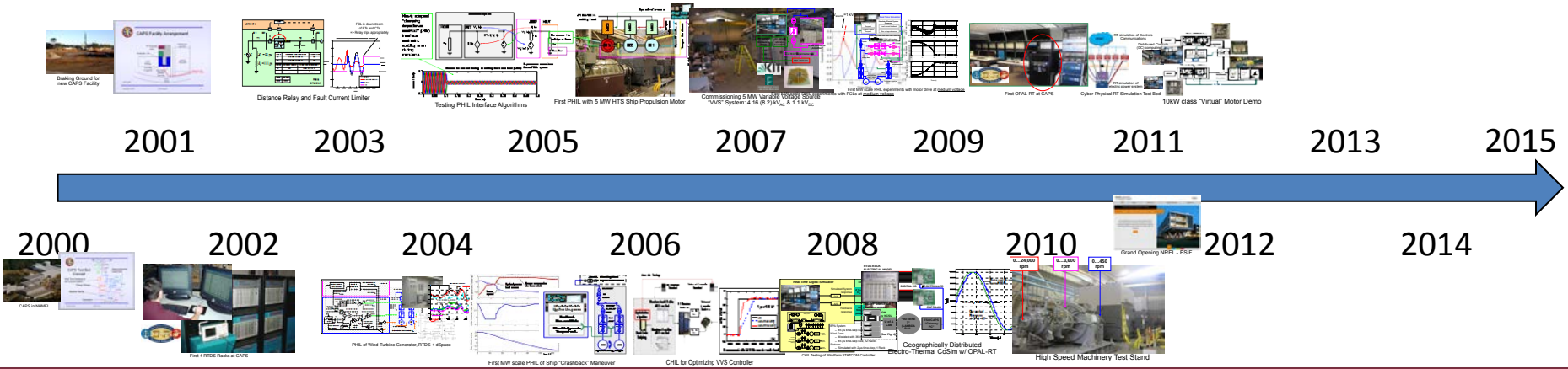

# 15 Years of CHIL & PHIL at CAPS

Satcon™

SOUTHERN CALIFORNIA EDISON®
An EDISON INTERNATIONAL® Company

QUANTA TECHNOLOGY

NREL
NATIONAL RENEWABLE ENERGY LABORATORY

## First full PHIL with 500 kW PV converter

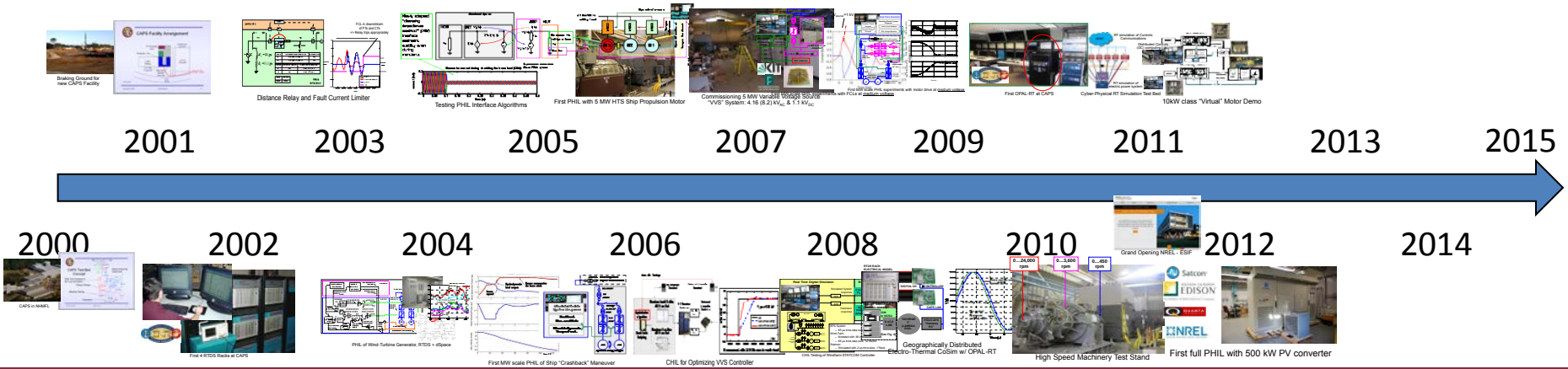

# 15 Years of CHIL & PHIL at CAPS

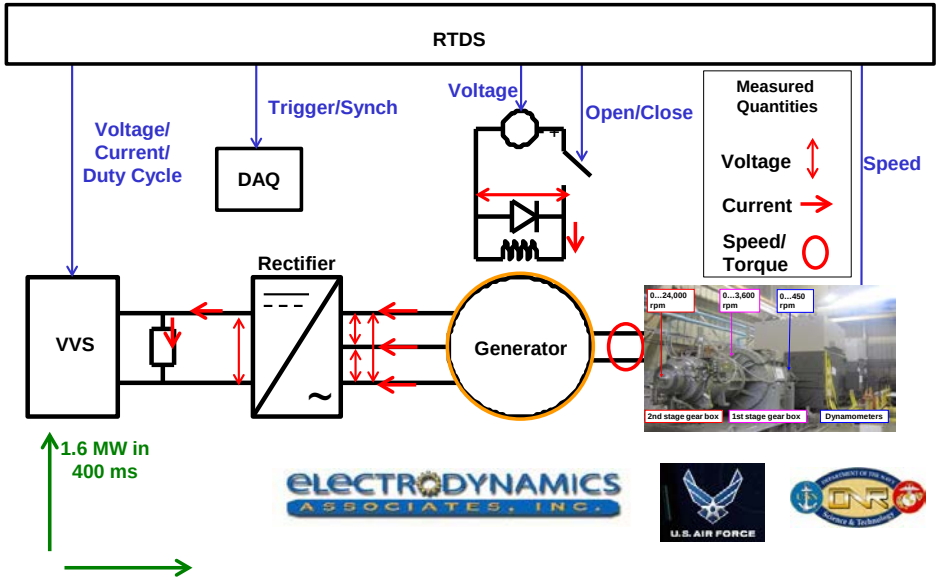


PHIL Testing High Speed Generator

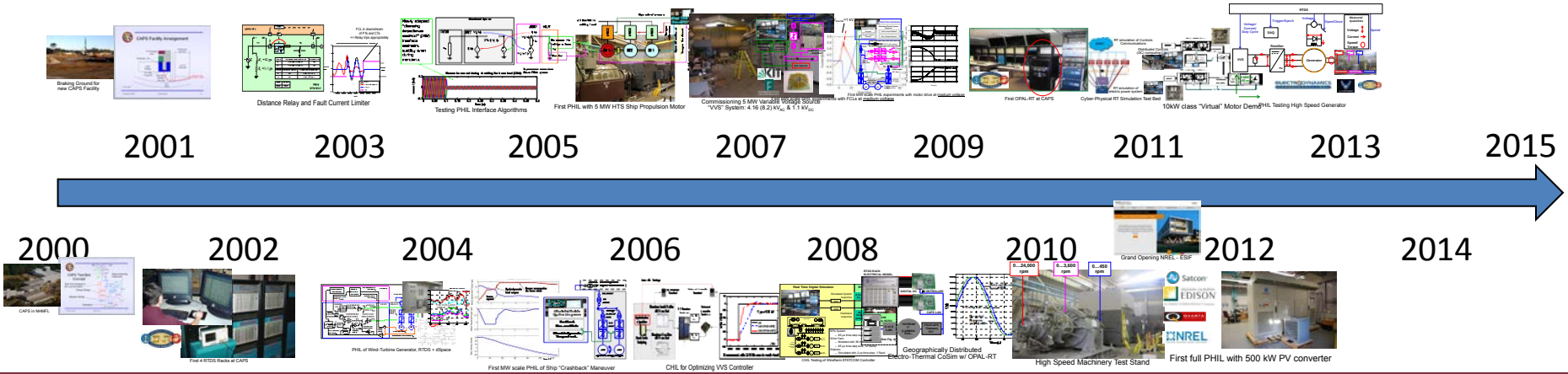

# 15 Years of CHIL & PHIL at CAPS

Grand Opening Clemson - EGrid

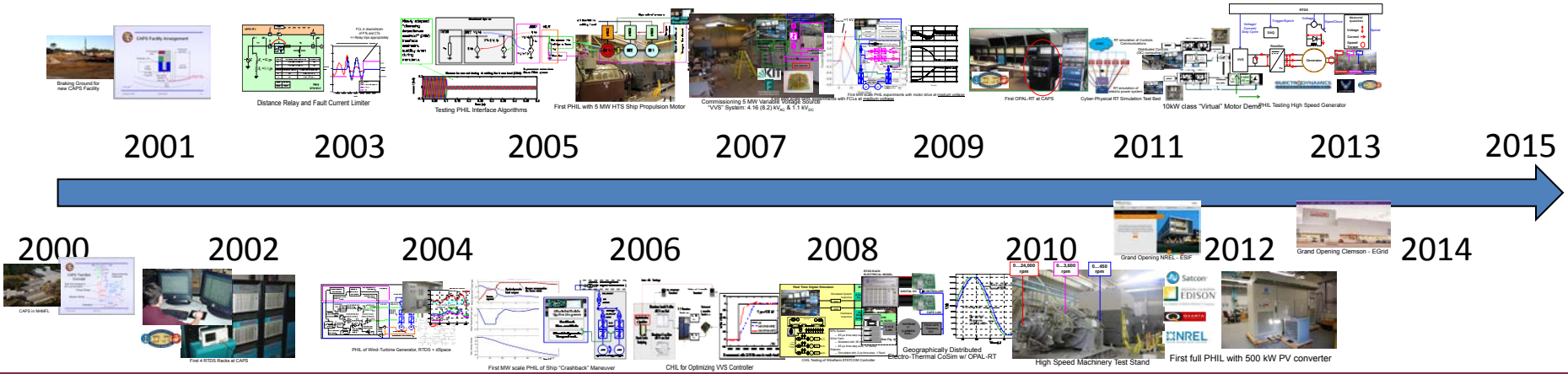

# 15 Years of CHIL & PHIL at CAPS

Second OPAL-RT System at CAPS

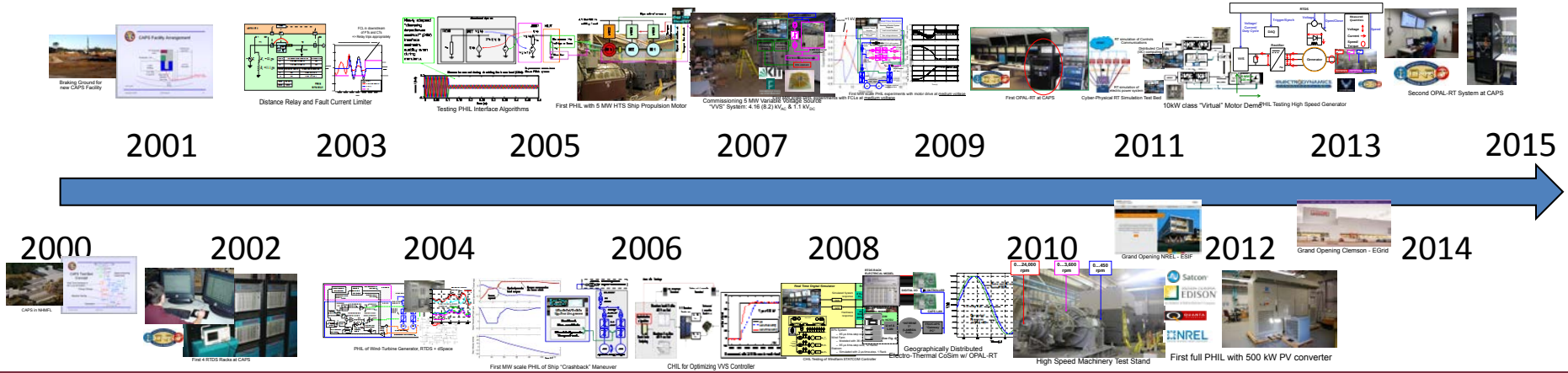

# 15 Years of CHIL & PHIL at CAPS

PHIL Testing of MW scale Naval AC-DC Converter

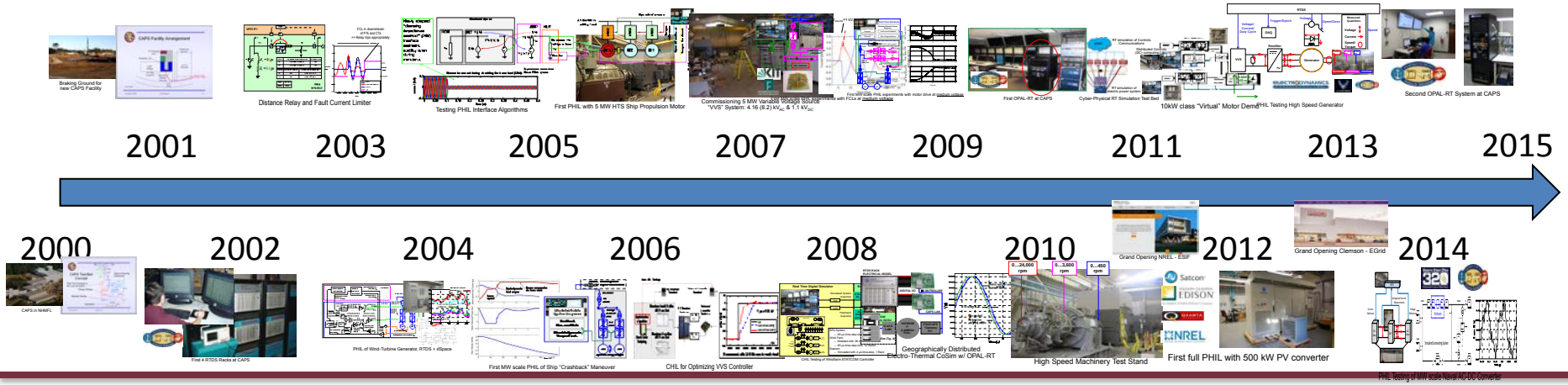

# 15 Years of CHIL & PHIL at CAPS

Dynapower needed to test a 1 MW DC-AC inverter for standard compliance

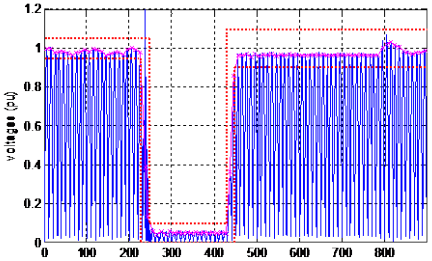


Italian standard requires 50 Hz and variations in symmetric and asymmetric voltage conditions

Norma Italiana CEI, *CEI 0-16, Reference technical rules for the connection of active and passive consumers to the HV and MV electrical networks of distribution companies*, December 2013.

European Certifying Agency
"Technischer Uberwachungsverein" (TUV)
witnessed tests at CAPS and certified results

## LV Ride-Through Tests using the VVS

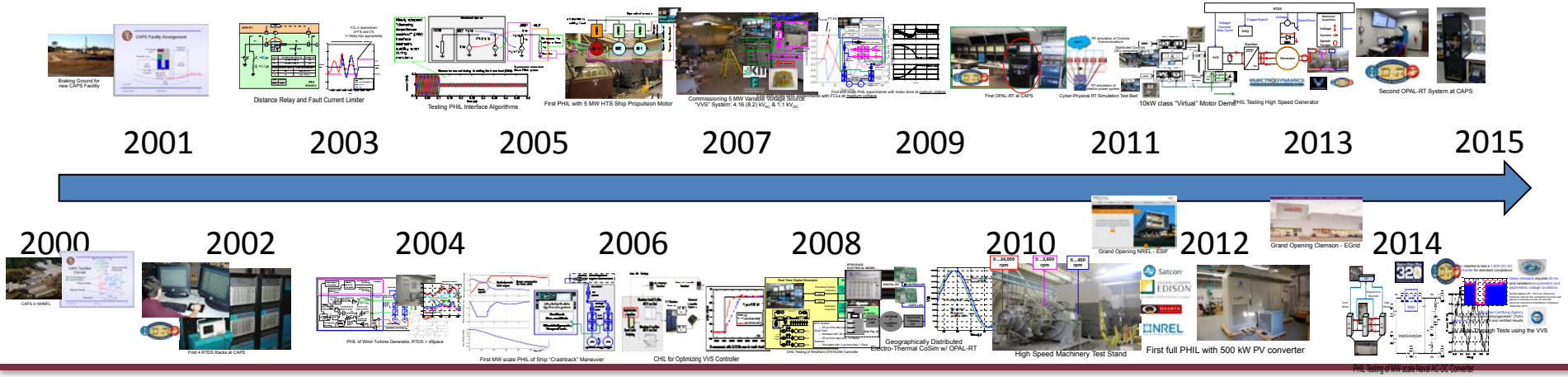

# New CAPS MVDC Lab

4 individual Modular Multi-Cell (MMC) Converters

Each 0…+/-6 kVdc, 0…+/- 210 A

12 kHz effective switching frequency

Galvanically isolated

Any series & parallel configuration possible

# Full Bridge MMC

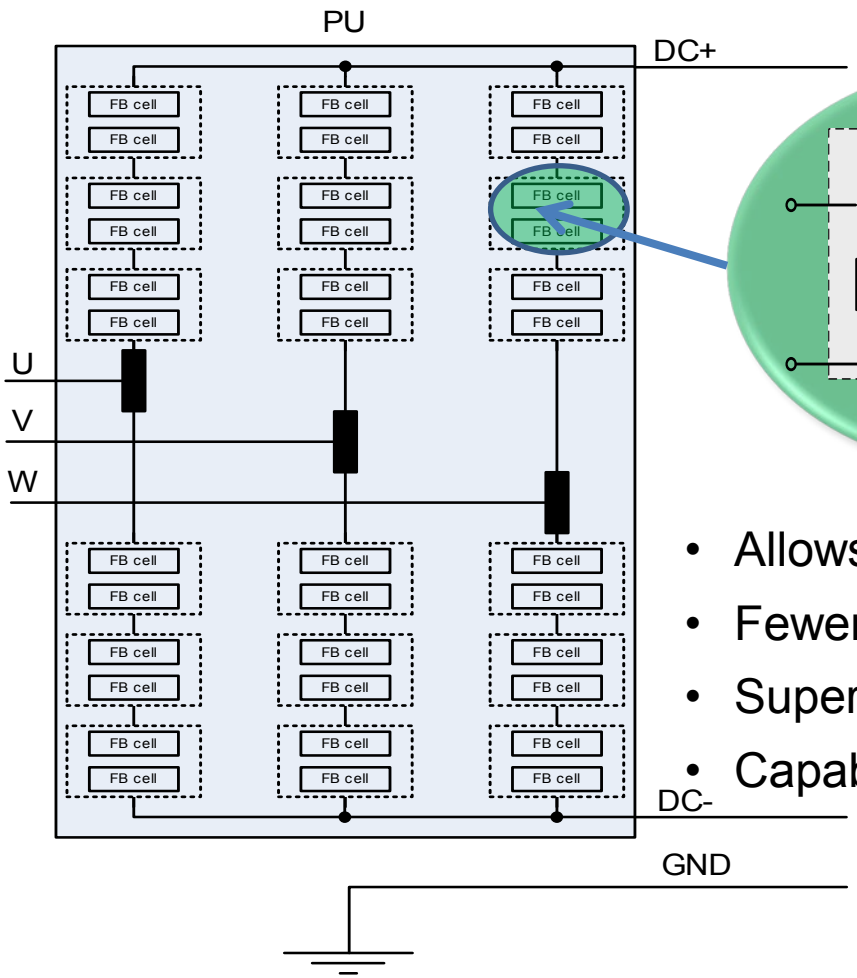


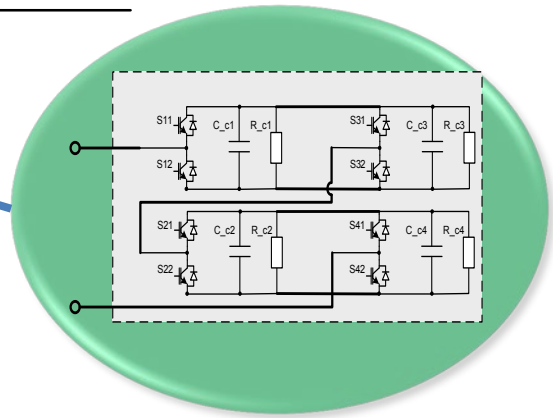


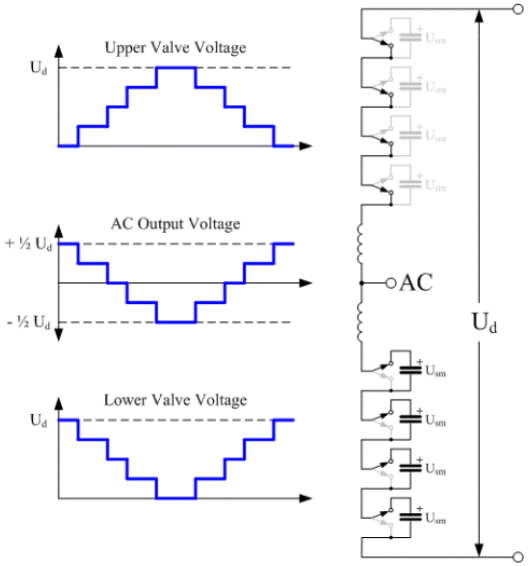


- Allows insertion of capacitor voltage in either polarity
- Fewer cells per phase arm for MVDC applications
- Superior voltage control
- Capability to fully control DC currents, even if Vdc <<

# MMC Controller HIL (CHIL) Simulation

**CHIL simulation of the PHIL amplifier is an essential tools to de-risking PHIL experiments**

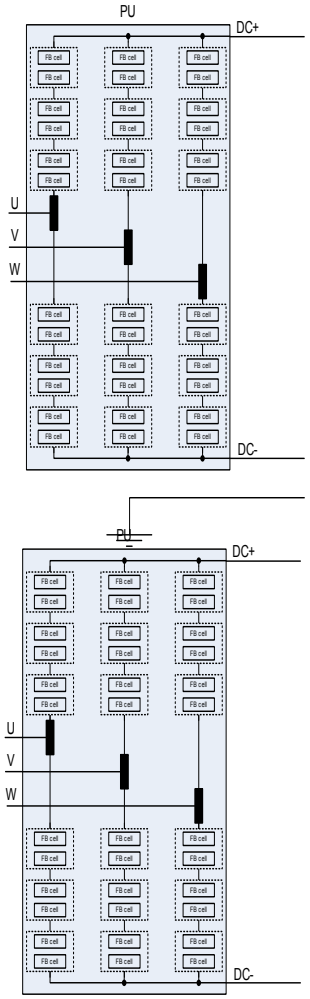


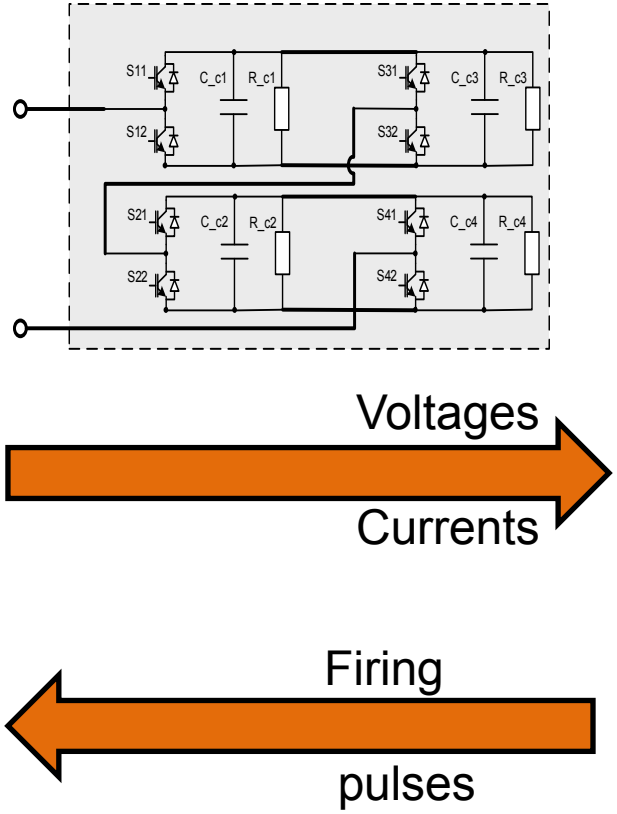


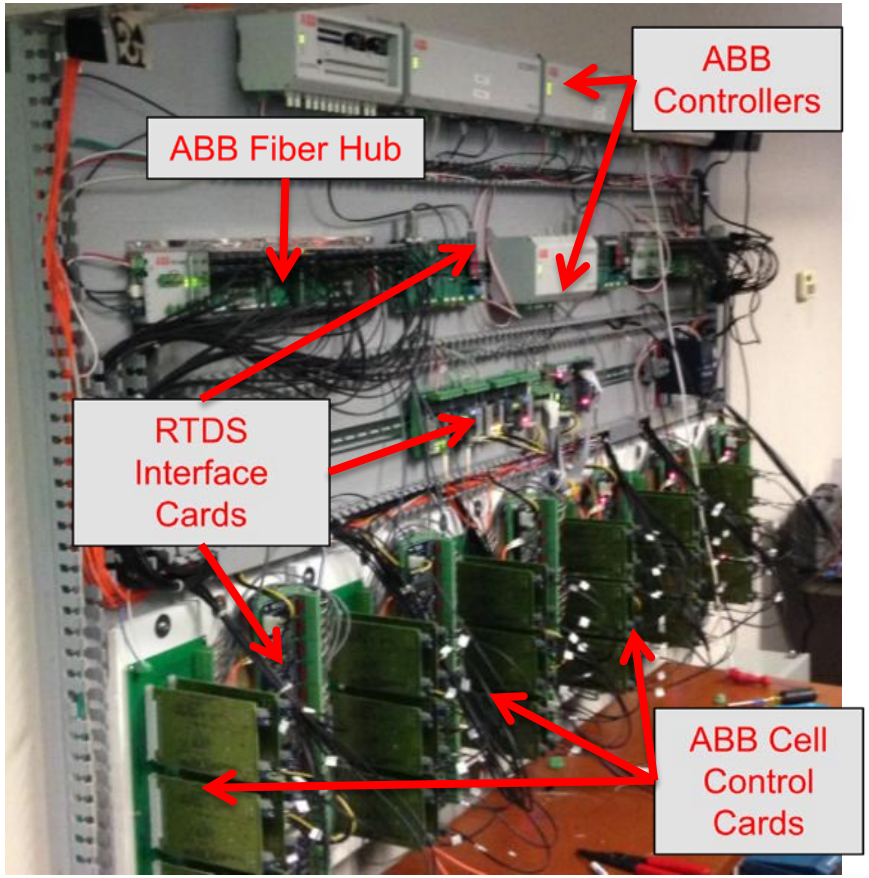


**Two full converters modeled in RTDS (dt = 2us)**

**Two converter controls interfaced with RTDS**

# MVDC Lab
# Experimental Possibilities

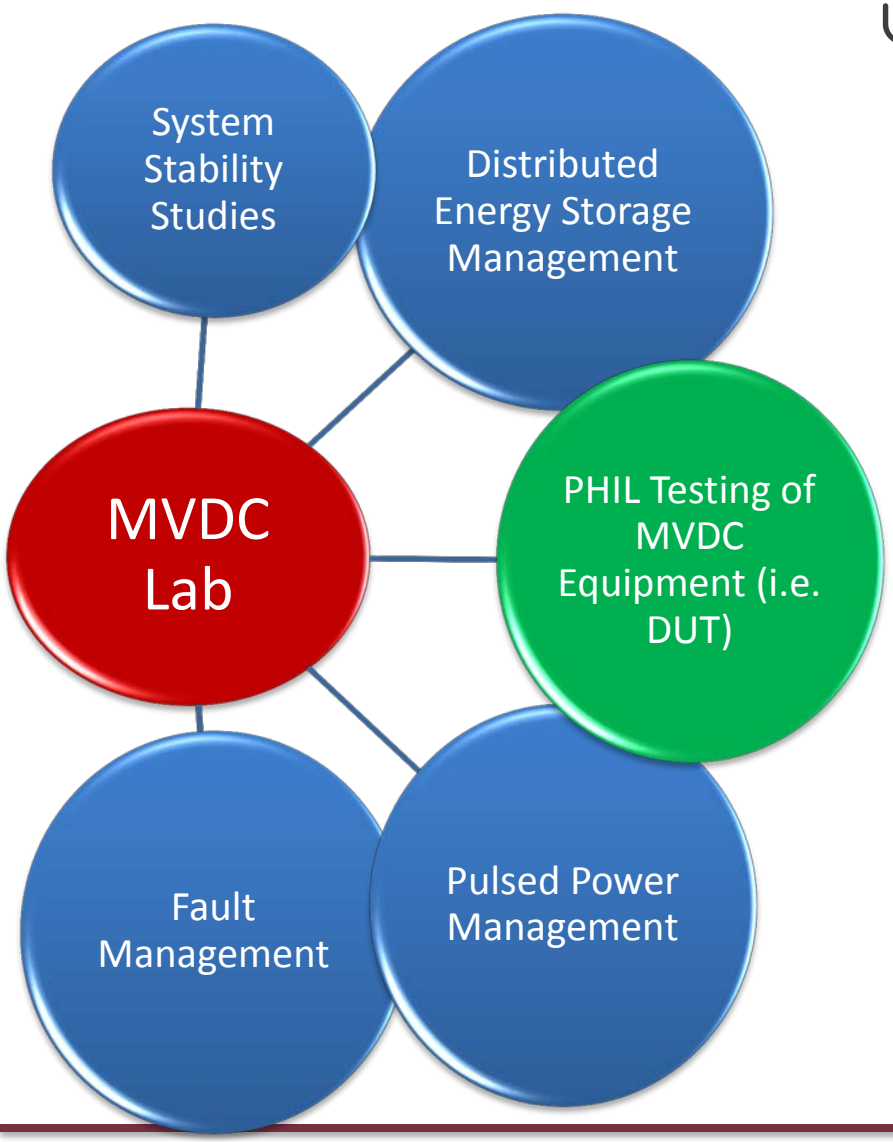


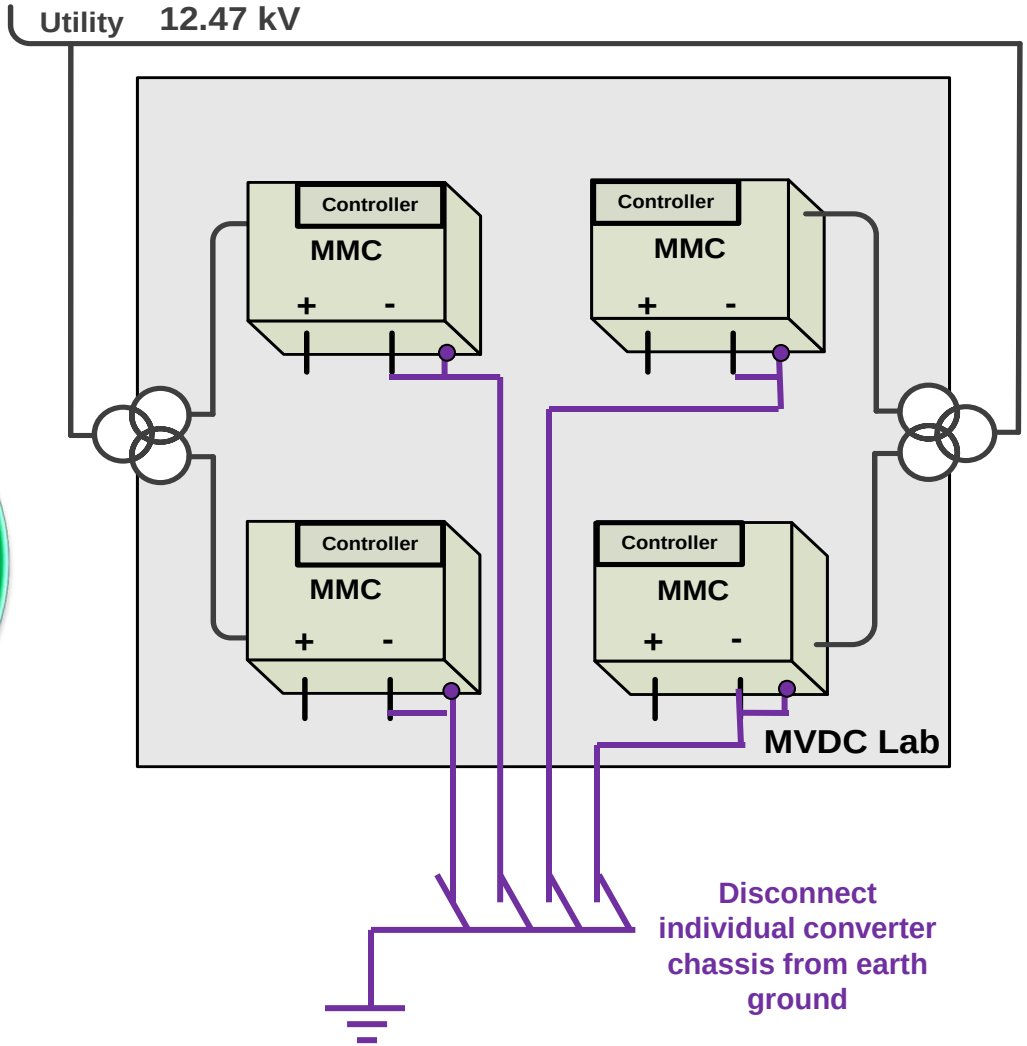

# FSU-CAPS **3 x 5 MW** Facilities

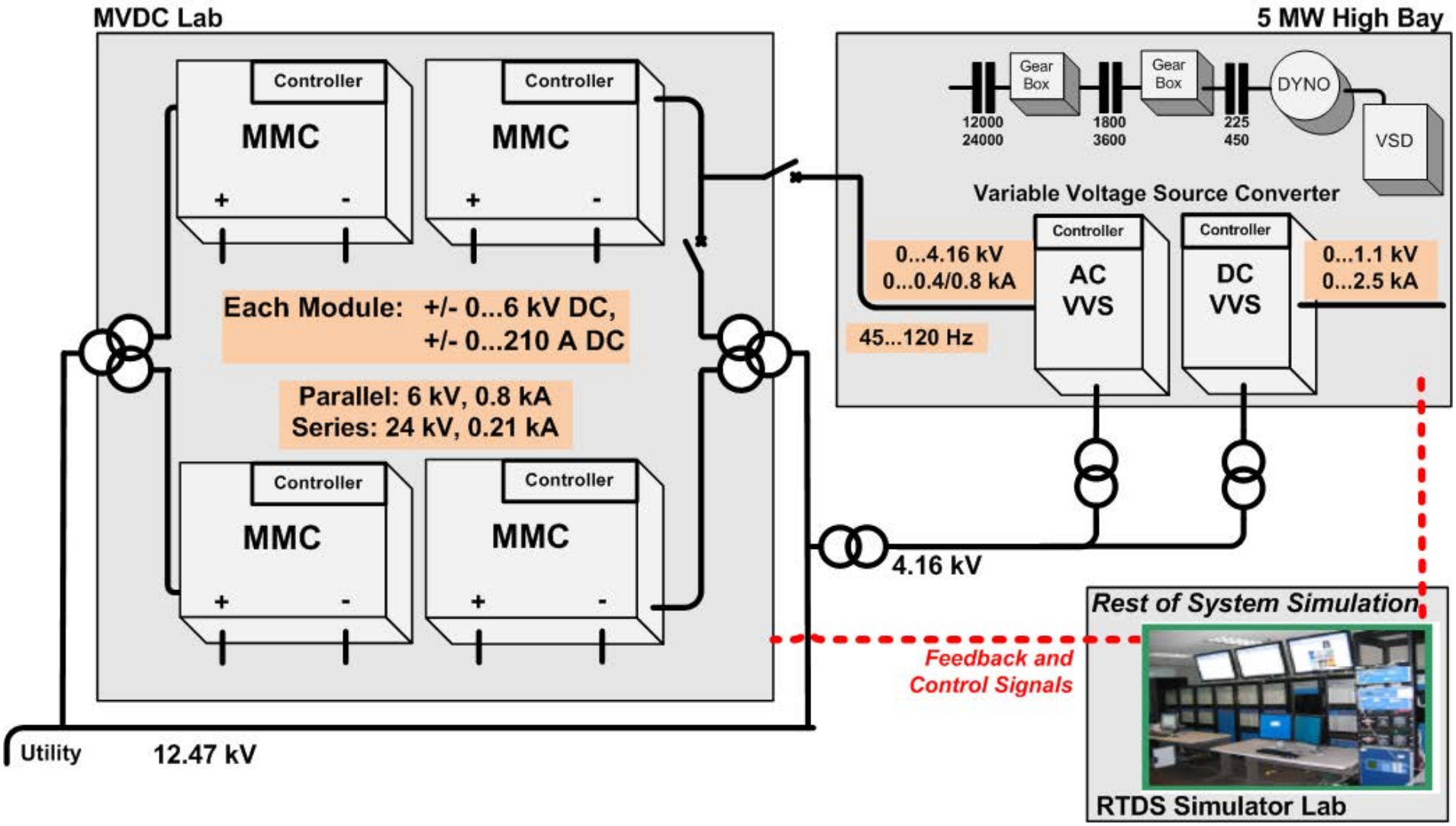

# PHIL based Rapid Power Transfer

- Power transfer with different rates
- 5 ms delay in action of second load
- AC voltage and frequency fluctuation is minimal
- Generator power reaches 1.5 pu for 15 ms

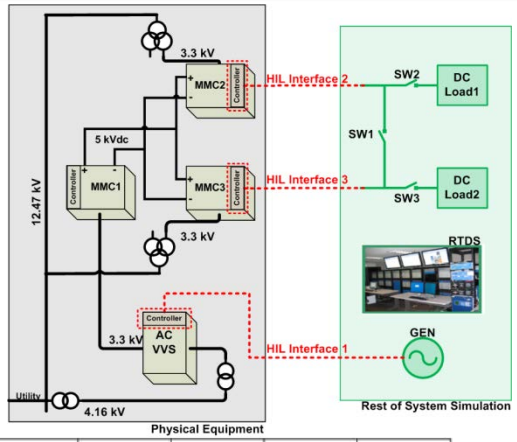


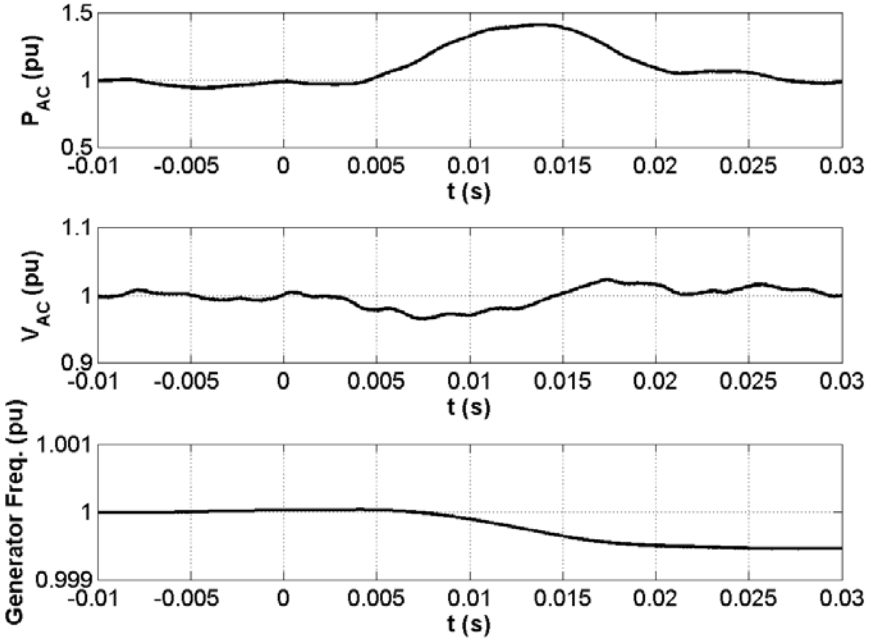


3.9 MW, 4.16 kV, 60 Hz

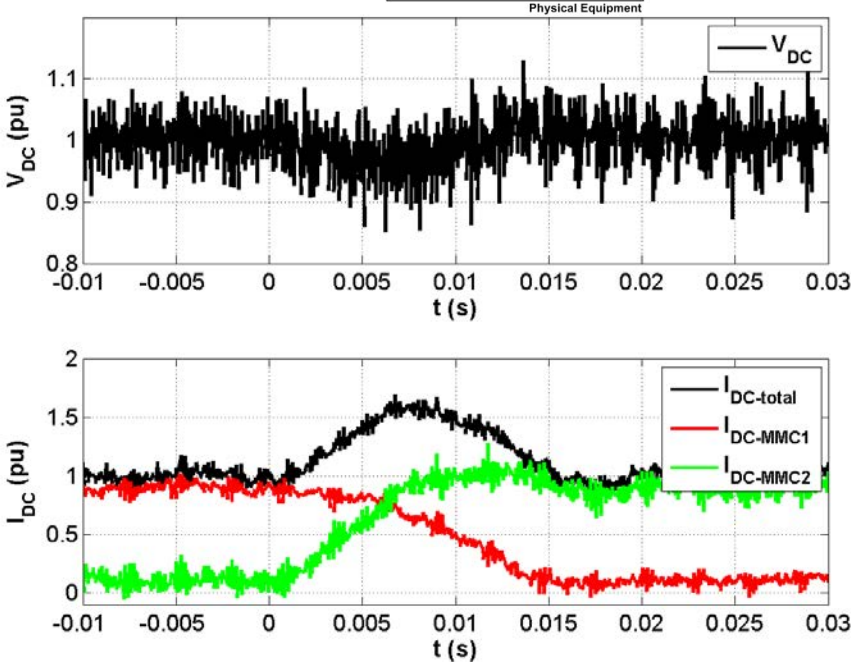


750 kW, 5 kV, 150 A

# Energy Storage Control via MVDC Bus

Compensation of load fluctuations with ES locally controlled from MVDC bus

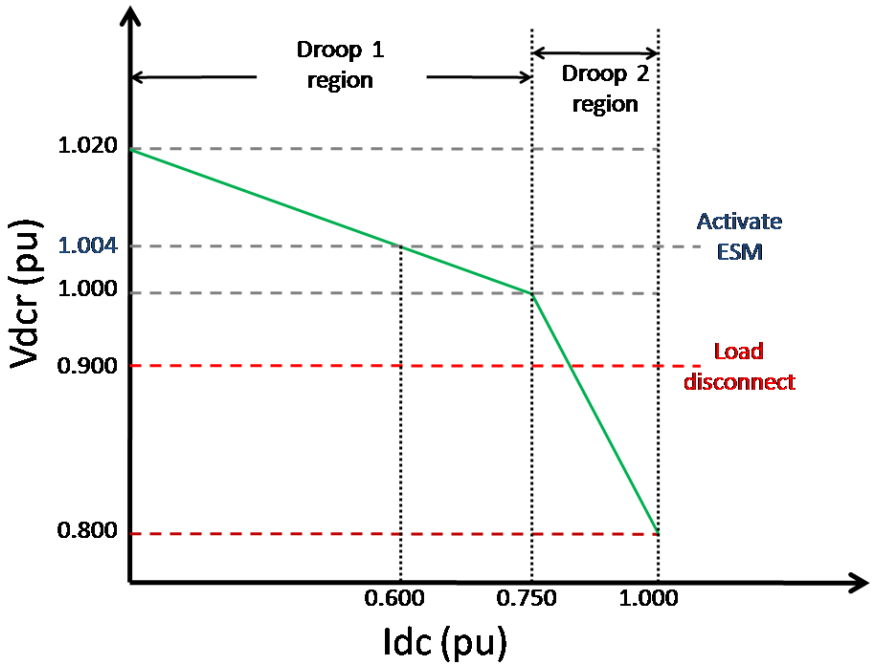


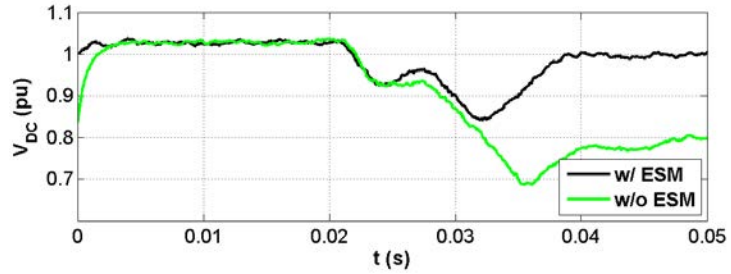


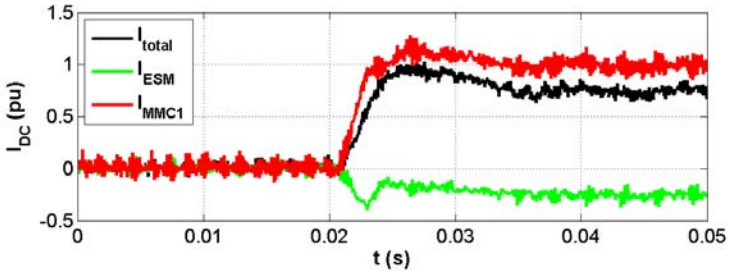


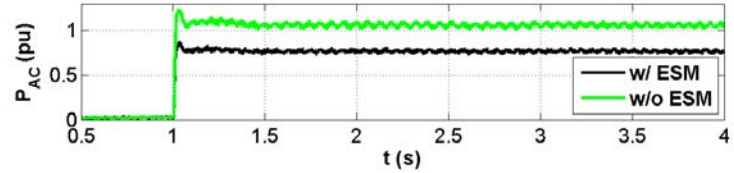


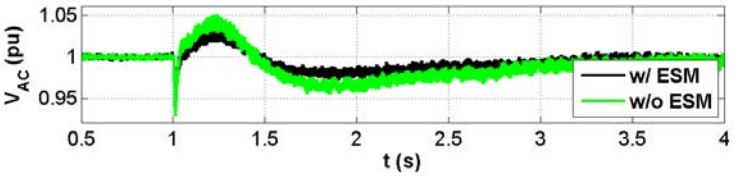


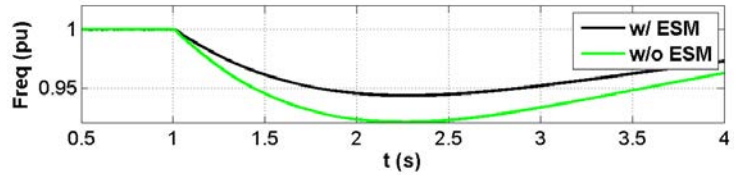

# IMU Testing at FSU-CAPS

- Installed and commissioned on May 18th
- Goal: Exercising the IMU on active loads & sources
- Individual PEBB tests: OK
- Discovered effects of HF common-mode currents
- Improved EMI, learned valuable lessons for PEBB-1000 and PEBB-6000 programs

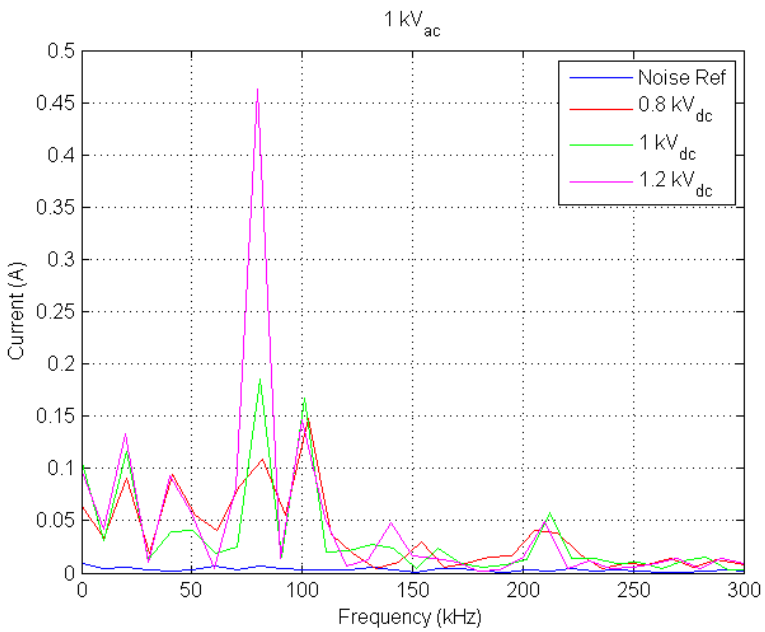


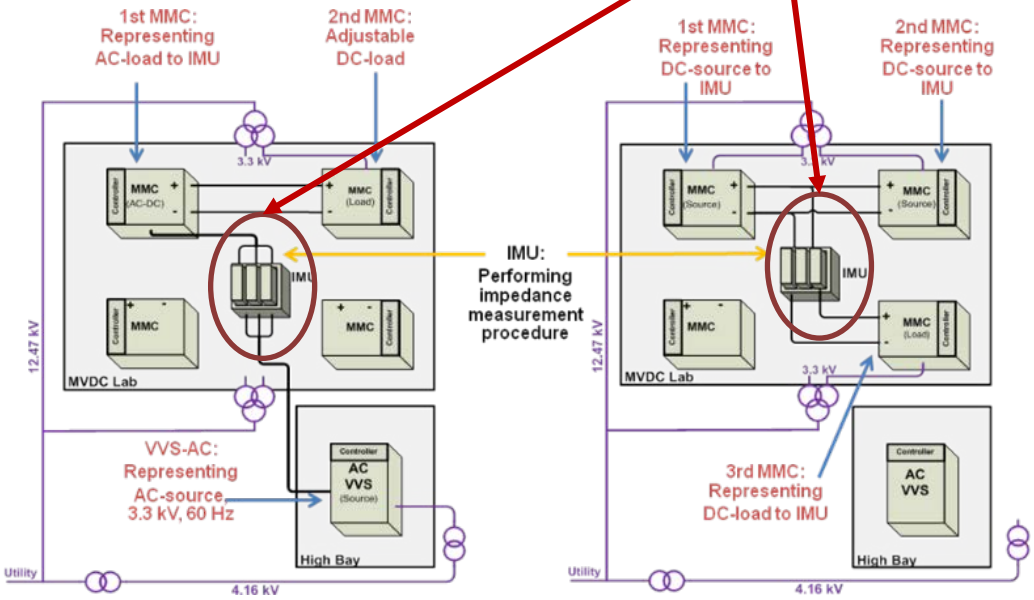

# Fault Management in Breaker-less MVDC shipboard power systems

- Identify and isolate short-circuit faults via coordinated control of power converters and non-fault-breaking ultra-fast mechanical disconnects
- Challenges
  - Looped system with multiple sources
  - Fault current waveforms (transients during faults)
  - Bi-directional power flow from power electronics
  - Targeted system response (1) to (4): 8 ms
- Primary – Centralized Fault Management (CFM)
  - Based on federated data aquistion
  - Instantaneous percentage differential scheme
- Backup – Localized Fault Management (LFM)
  - Based only on local measurements
  - Distance protection principle

**Fault clearance process of MVDC system**

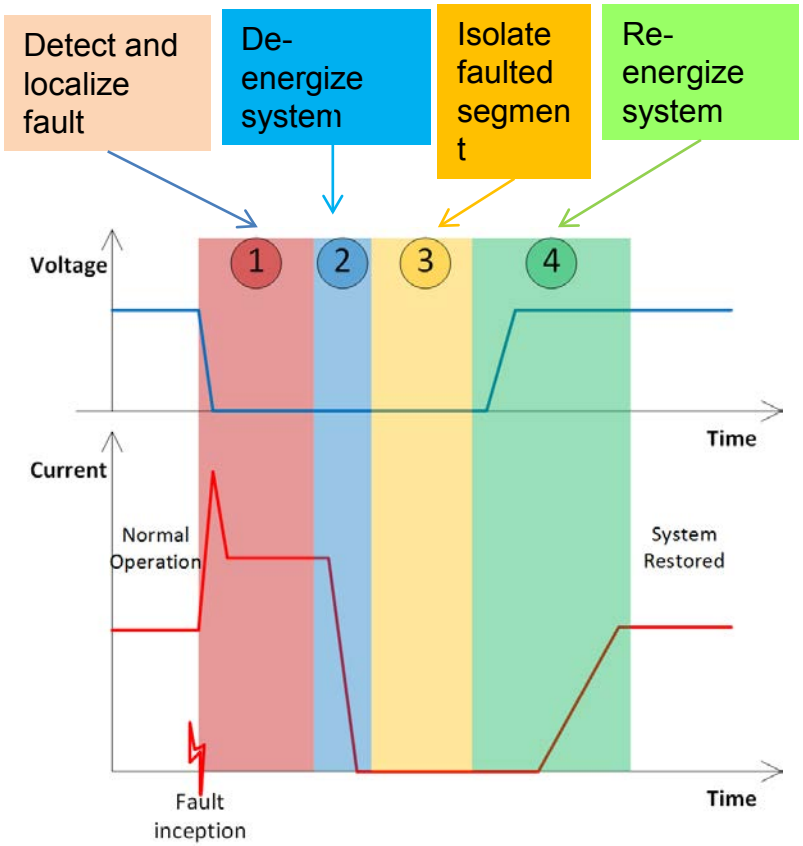

# Current Limiting with MMCs

- DC voltage reference set to 1 kV
- Prospective current: 597 A
- Contactor closes at t=0
- Max current 270 A
- Steady state current 201 A @ 385 V
- DC voltage reference set to 0 kV at t = 0.3 s

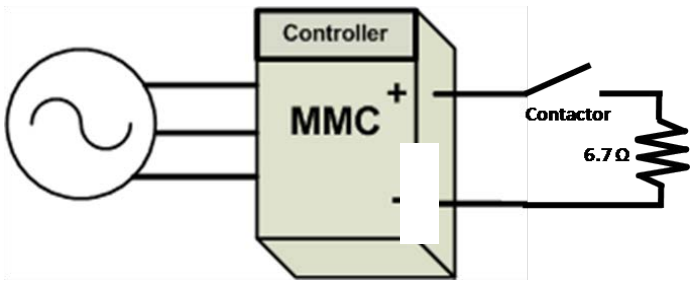


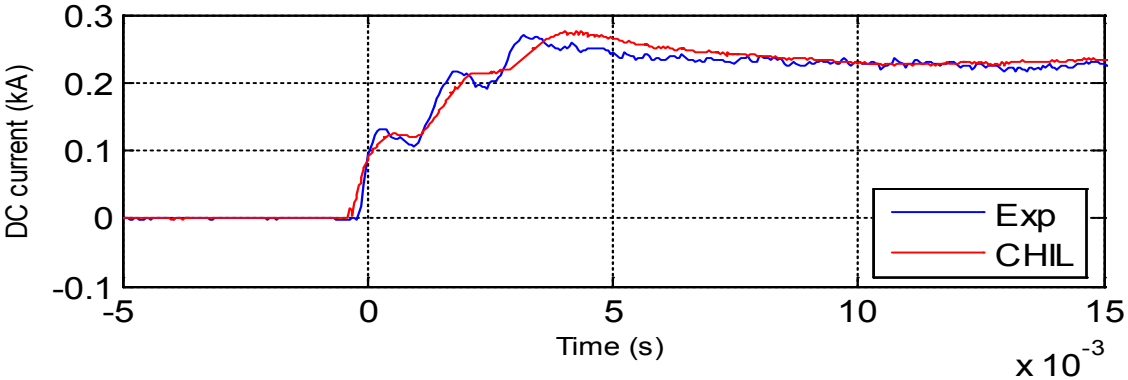


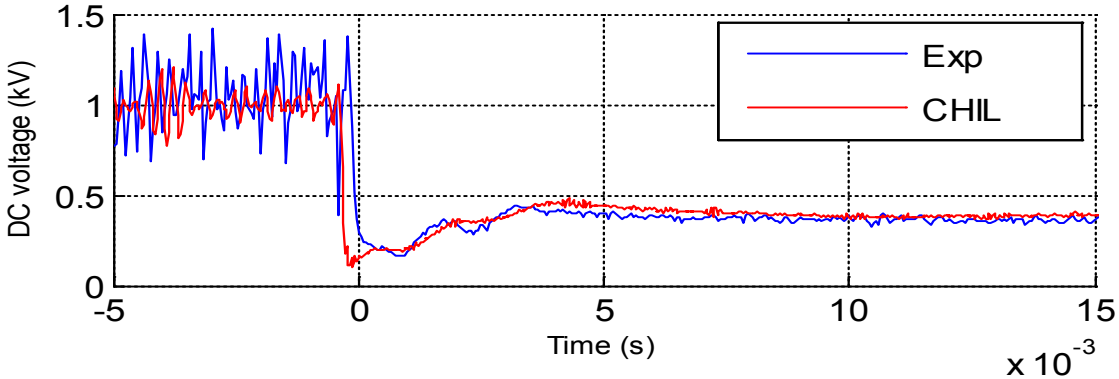

# Arc Fault Testing

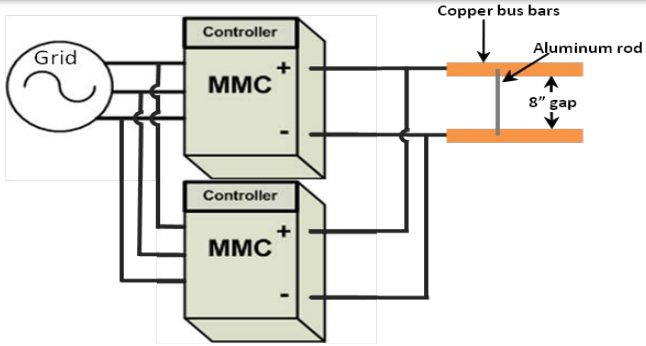


**Setup: Two MMCs connected in parallel in CSM and to a set of copper bus bars. The bus bars are set with 8" gap of separation and an aluminum rod provides a short between the two.**

**Photograph of the arc fault setup with 8" gap between DC rails and aluminum rod shorted between probes.**

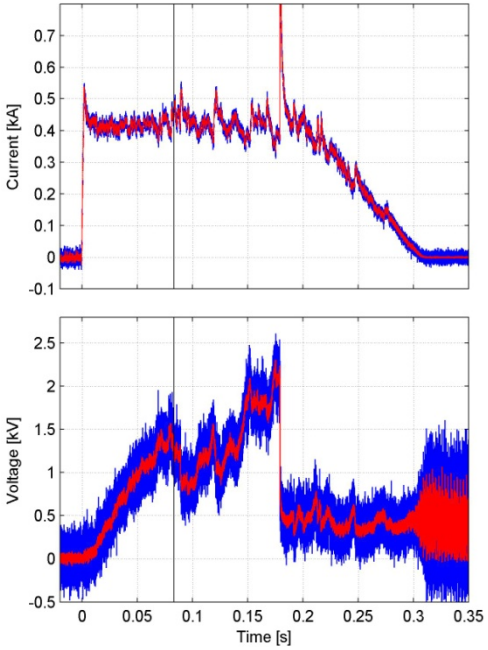


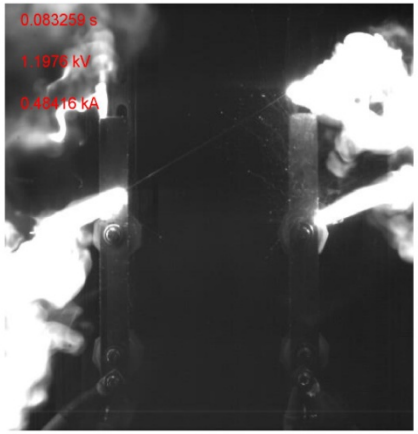


**Snapshot of the arc during the test with correcting voltage and current waveforms**

# Concluding Remarks

- Established MVDC facility with MMCs
- Ongoing experiments
  - Testing of VaTech's Impedance Measurement Unit
  - Rapid Power Transfer in shipboard MVDC systems
  - Fault Management in fault current limited shipboard MVDC systems
  - Common mode coupling of MW scale converters

# Concluding Remarks

- Established MVDC facility with MMCs
- Ongoing experiments
  - Testing of VaTech's Impedance Measurement Unit
  - Rapid Power Transfer in shipboard MVDC systems
  - Fault Management in fault current limited shipboard MVDC systems
  - Common mode coupling of MW scale converters

**15 years of CAPS Leadership in CHIL & PHIL to be continued…**