DOE MICROGRID R&D PEER REVIEW
June 11, 2020

Microgrid Building Block (MBB)

Chen-Ching Liu* and Dushan Boroyevich**
Igor Cvetkovic, Jingyu Wang,***
Jennifer Appiah-Kubi*

***Power and Energy Center (PEC)**
****Center for Power Electronics Systems (CPES)**
Virginia Tech

In Collaboration with PNNL

Microgrid Building Block (MBB)

Objectives & Outcomes

VT performs a conceptual study of an MBB focused on power conversion and microgrid control functions. An Information and communication system for the microgrid controller is proposed. A microgrid is designed, modeled, and simulated to demonstrate the steady-state and transient performance. A VT campus Microgrid, including a CHP unit and an interconnection with a distribution system, is used to study capabilities and limitations.

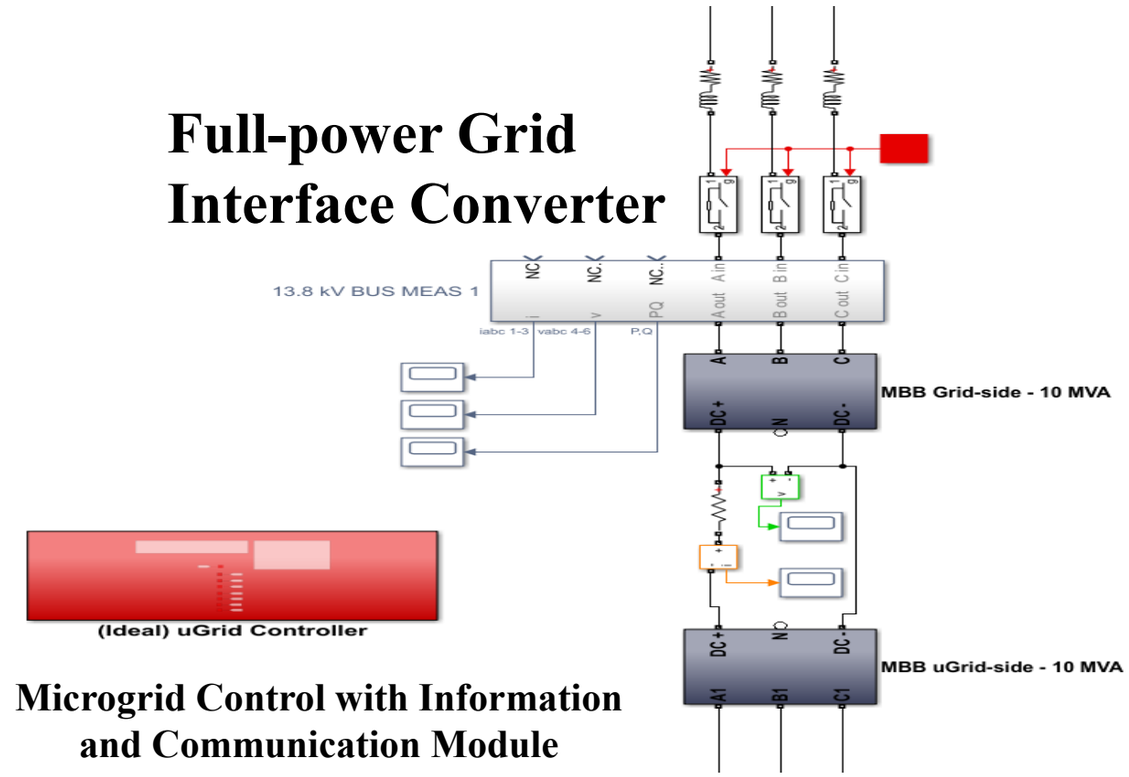

Technical Scope

The structure of an information and communication system is developed, which is applicable to hierarchical as well as distributed controllers. Simulation results on the control performance considering communication latency are obtained. The critical threshold of latency is determined. Performance of the MBB-based microgrid is evaluated by modeling and simulation. The VT campus microgrid is used as a test case.

Funding Summary ($K)

FY20, funded (NEW)	FY21 Authorized/ Requested
$200K	$50K/ $200K

Microgrid Building Block (MBB)

- Bidirectional full-power grid interface converter
- Features current and voltage loops on both sides as well as associated phase-locked loops
- Developed for system-level study

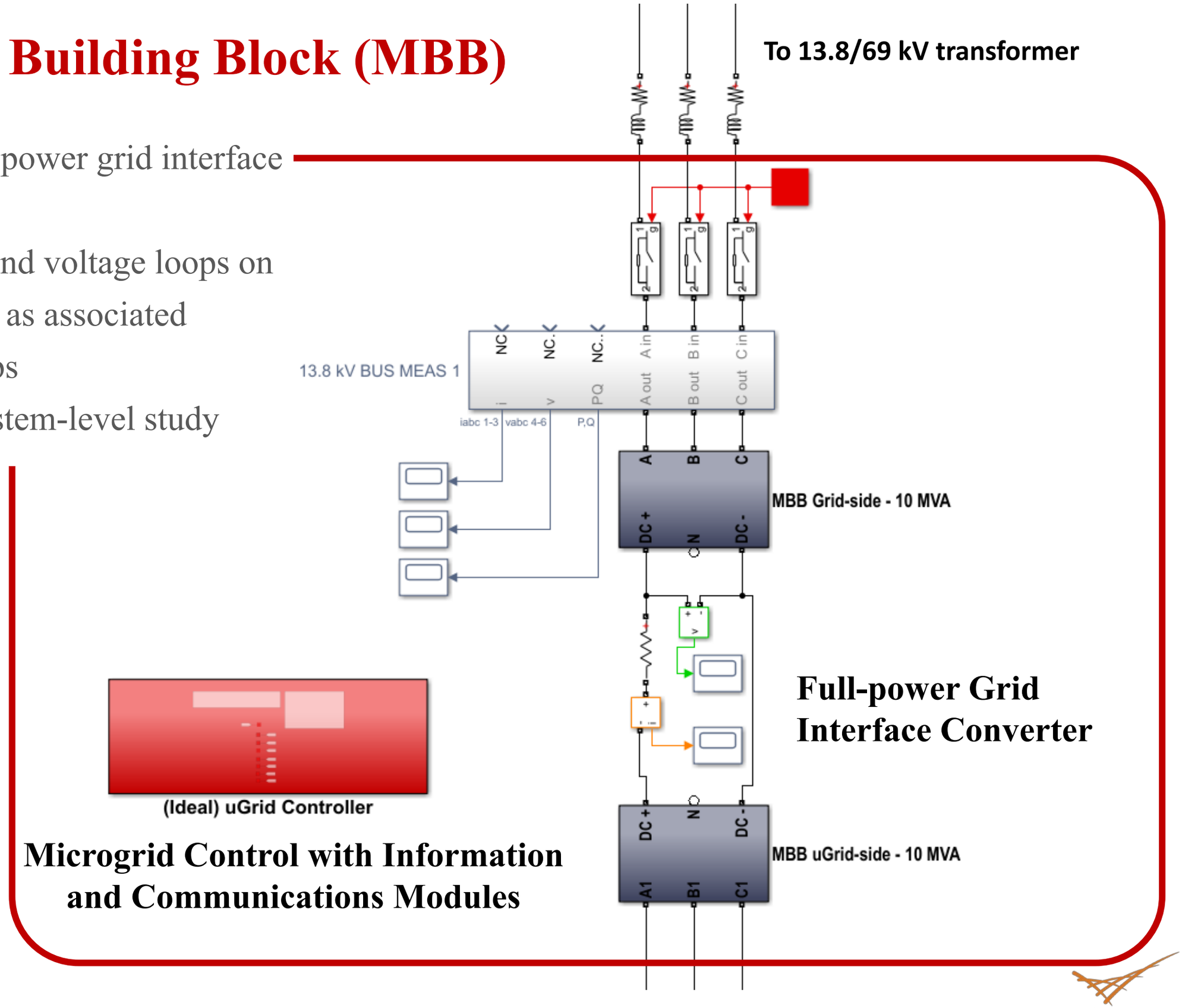

Progress and Results

- ***What has been done:***

Design of the information and communication system

- Structure of an information and communication system is developed, applicable to both hierarchical controllers and distributed controllers.
- Cyber security strategy is developed for the proposed cyber system.
- Simulation results are obtained for control performance subject to communication latency. The critical value of latency is determined.

Modeling and simulation of the MBB-based Microgrid

- Steady state and dynamic performance of the MBB-based microgrid has been evaluated by modeling and simulation.
- The VT campus microgrid is used as the test case.

- ***What will be done:***
  - Performance evaluation of the proposed information and communication system by modeling and simulation
  - Power converter in a black start condition
  - Integration of power conversion and microgrid control capabilities

Scope of Study

- Information and communication system for microgrid control
- Cyber security strategy for the proposed cyber system
- Control performance subject to communication latency
- Detailed design of the power conversion/control module
- Feasibility of the MBB design by modeling and simulation
- Campus microgrid study case: existing campus microgrid at Virginia Tech that includes a CHP unit with an interconnection to a utility distribution system
- Steady state and dynamic performance of the MBB-based microgrid

Information and Communications for MBB

- **Microgrid Controller (MGC) acts as the 'brain'**
  - Connectivity to critical cyber elements
- **In a centralized system, LCs connect to the MGC for control purposes.**
  - A master-slave architecture is modeled.
- **Distributed control is also common, and provisions need to be made.**
- **Cyber model should allow for both topologies.**
- **A practical network meets these requirements:**
  - Real-time performance
  - Cybersecurity
  - Robustness and adaptability

ICT Model for IEEE 13-Node Microgrid

- **Primary elements are MGC and LCs of the DERs**
  - LCs interface with a remote terminal unit (RTU) as a gateway; RTUs are used to represent LCs
  - All LCs connect to MGC for centralized secondary control
  - LCs interact with one another for distributed secondary control
- **Simulations are run to determine the critical:**
  - Measurement/Data sampling period: a sampling period of no more than 1.6 ms
  - Latency: highest tolerable latency found to be 950 ms
  - Bit rate and latency requirements for ensuring microgrid stability are relatively mild.
  - LCs transmit data to MGC approximately once a second; a data rate of about 10kbps suffices

ICT for IEEE 13-Node Microgrid

- **Wireless communication preferred**
  - Wired links harder to install and maintain, and more costly; not very scalable
- **Cellular connection preferred**
  - Modular, easy to setup and maintain; resiliency of routes ensured by the provider
  - Allowing virtual private networks (VPNs) for cybersecurity
- **Serial connection between RTU and LC preferably RS485**
  - Supported by most RTUs
  - Higher transmission rate (up to 10 Mbps) than RS232
  - Strong anti-common mode interference property
- **Location of RTUs close to DER may interfere with communication signals**
  - Wired link preferable between LC and RTU
- **Preferred application layer protocol DNP3**
  - Commonly used protocol in U.S., supported by most RTUs
  - Documentation accessible

Cybersecurity of the Microgrid ICT

- **VPN needed to isolate the microgrid cyber system from cellular networks**
  - VPN functionality widely supported by cellular gateways and RTUs
  - Each LC builds an independent VPN tunnel with MGC server
  - MGC server, a high-performance workstation with human-machine interfaces, needed to manage VPN tunnels
  - The following techniques can be implemented on MGC server:
    - Role-based access control (RBAC): controls who can enter the VPN
    - Firewall: maintains a whitelist or blacklist to filter network traffic
    - Intrusion detection system (IDS): monitoring microgrid communication and detect anomalies

ICT Model for IEEE 13-Node Microgrid

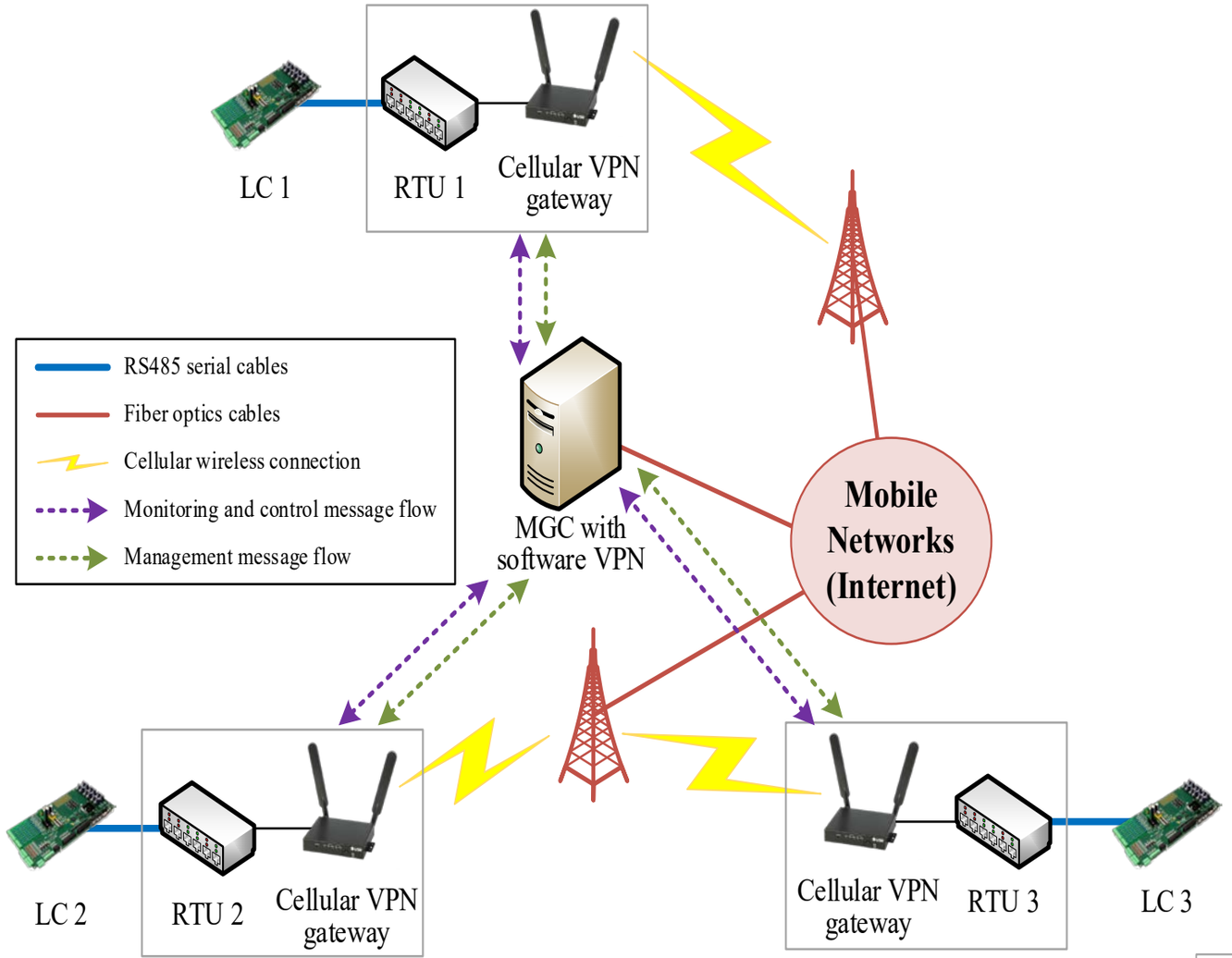

Centralized Model

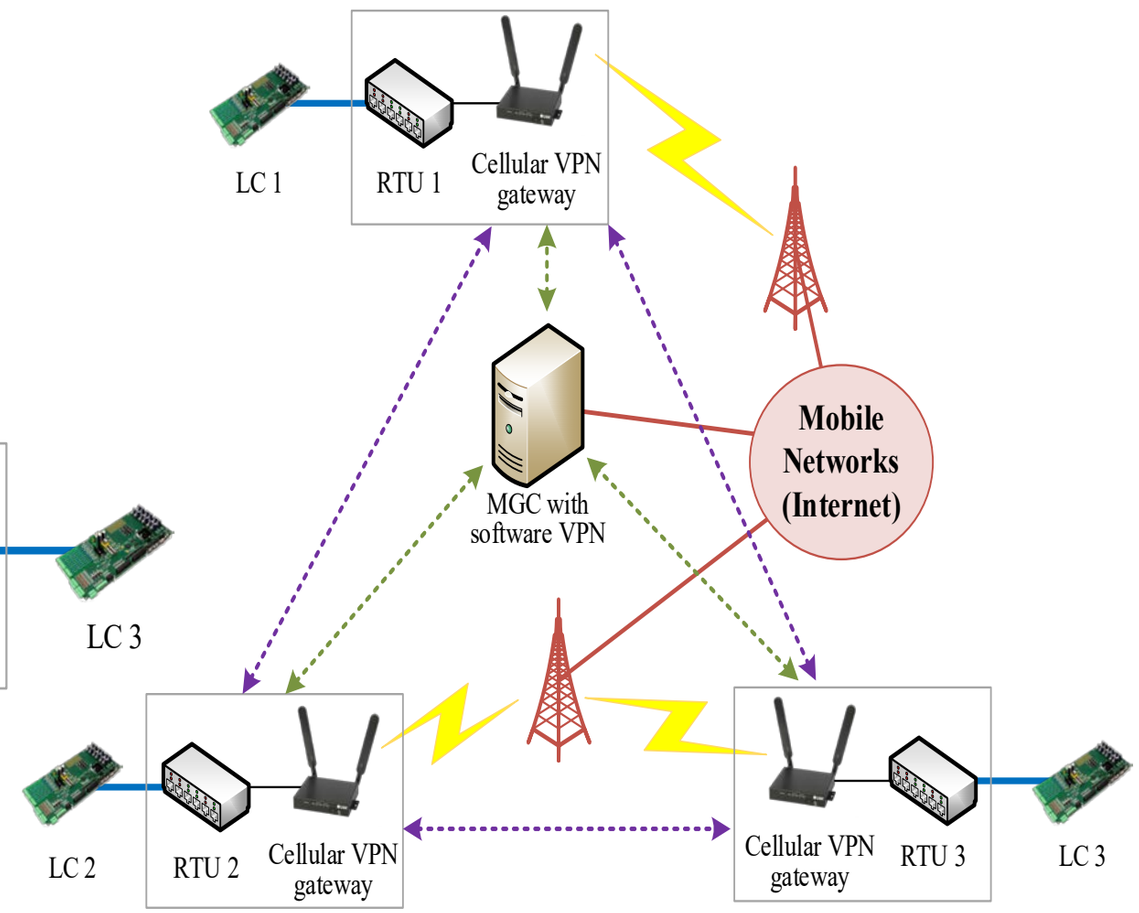

Decentralized Model

Modeling and Simulation

- **Physical microgird model built in Simulink**
  - Measurements are sent to the MATLAB workspace regularly
  - Model parameters can be adjusted dynamically by MATLAB codes
- **A network tool can be used to simulate the cyber model**
  - Offers enough functionalities for simulating microgrid communication
  - Well documented and recognized by industry and academia
- **MATLAB/Simulink and NS-3 are coordinated with HELICS**
  - HELICS: Cyber-physical co-simulation platform by PNNL provides a rich set of APIs for Python, enabling MATLAB and NS-3 to exchange data during runtime and stay synchronized

Effect of Communication Latency

- **A centralized model is assumed:**
  - Sampling rate of MGC set to once per second
  - LCs connected to MGC by means of mobile networks, with an average latency of 350 ms.
  - Latency of 50 ms assumed between PCC and MGC
- **Simulations of disturbances (i.e. load shedding at nodes 671 and 675 in sequence) show that the proposed cyber model meets requirements for stability.**

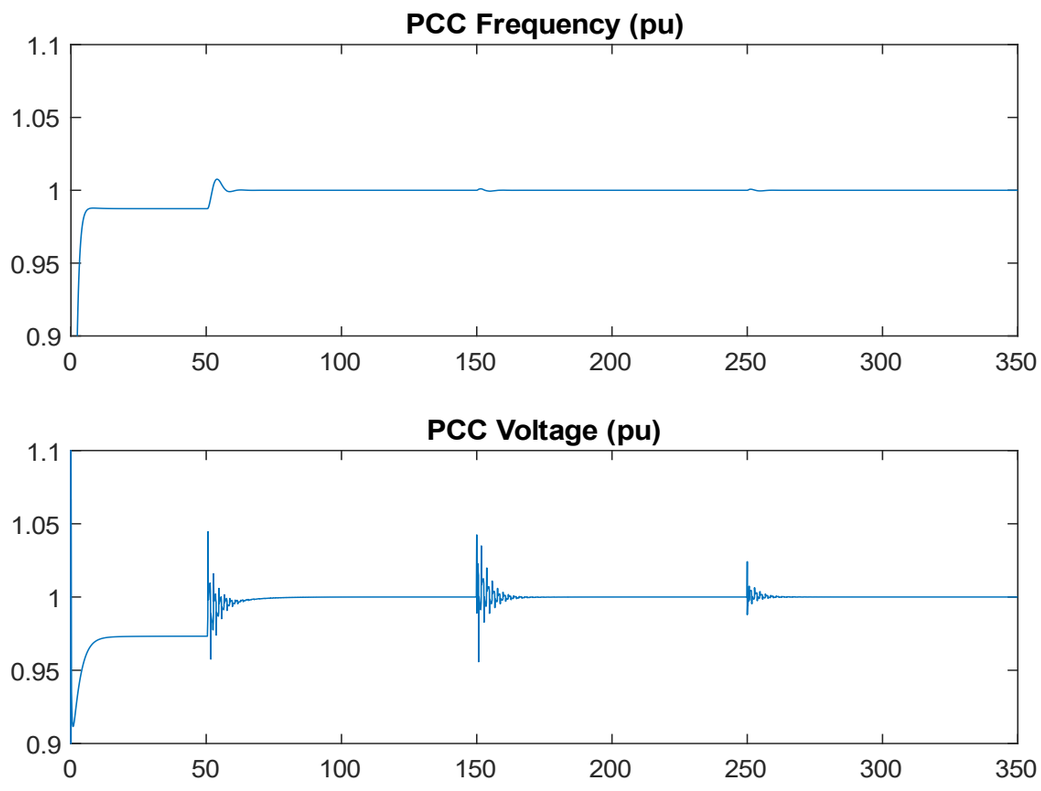

PCC voltage and frequency under centralized secondary control

Modeled VT Campus *Microgrid*

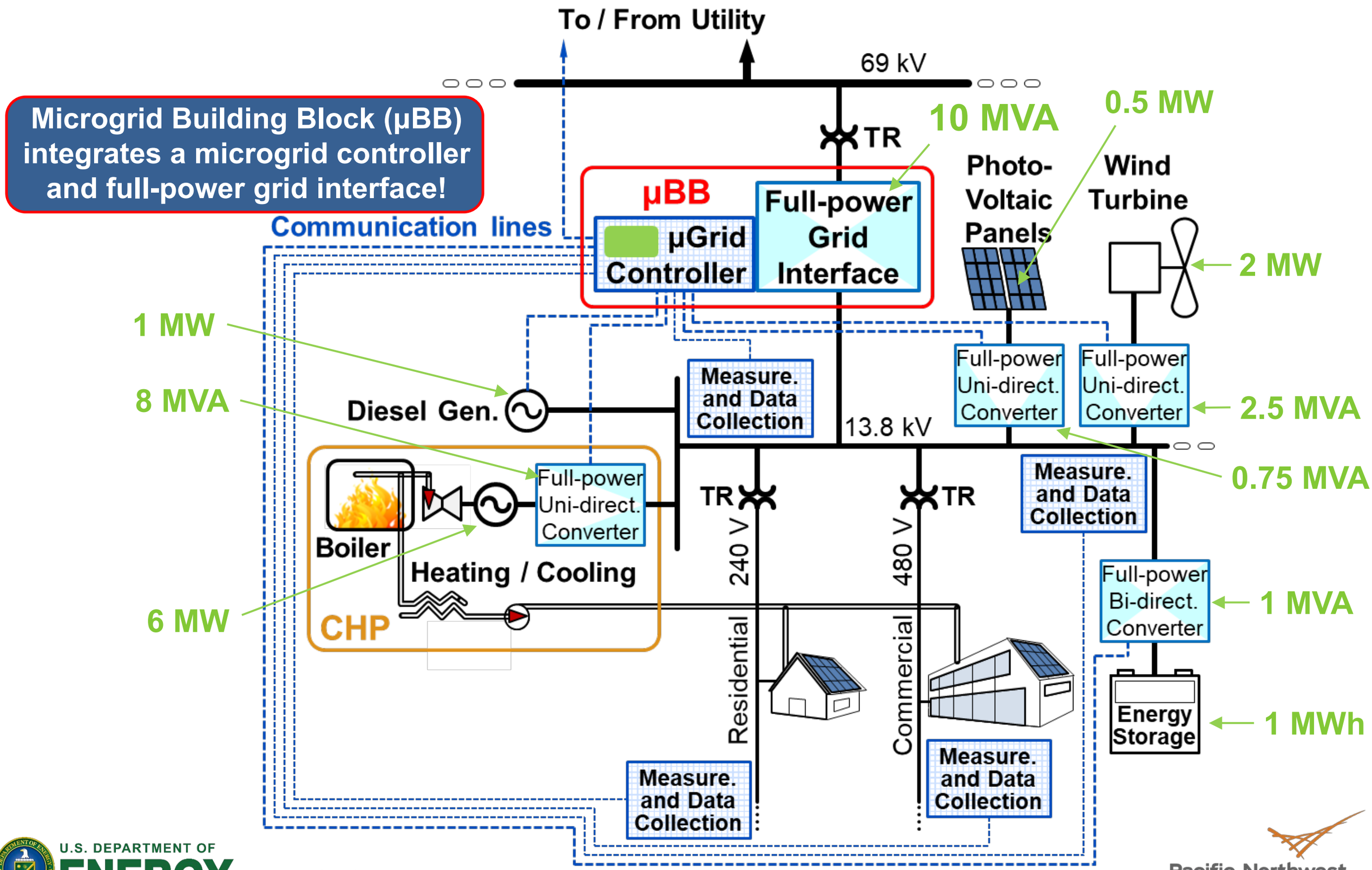

Generator and Power Electronics Converter Models

- Both models feature control based on the power balance from dc-ac side / rotor to stator
- Power Electronics Converters modeled to feature a voltage loop closed over the ideal current loop (simplifies simulation without the loss of generality)

Simplified representation of the power converter model

$$P_{in} = P_{out}$$

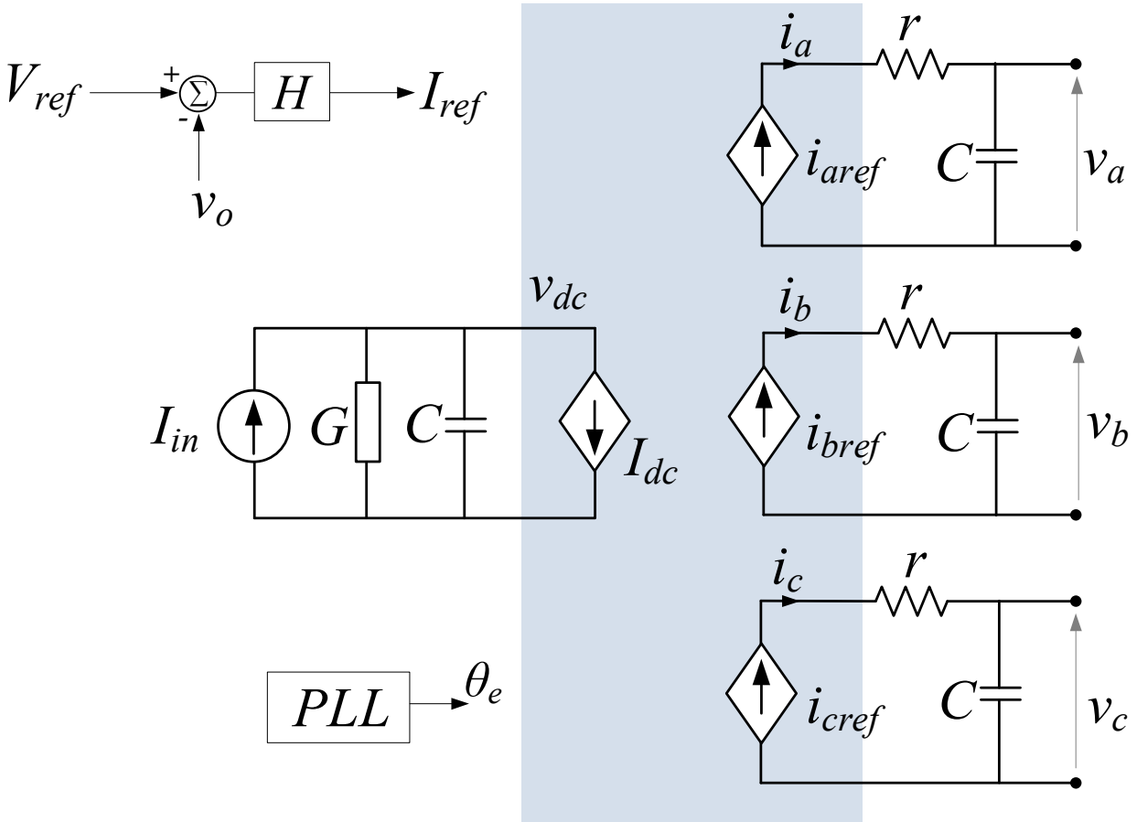

Simplified representation of the generator model

$$P_{in} = P_{out}$$

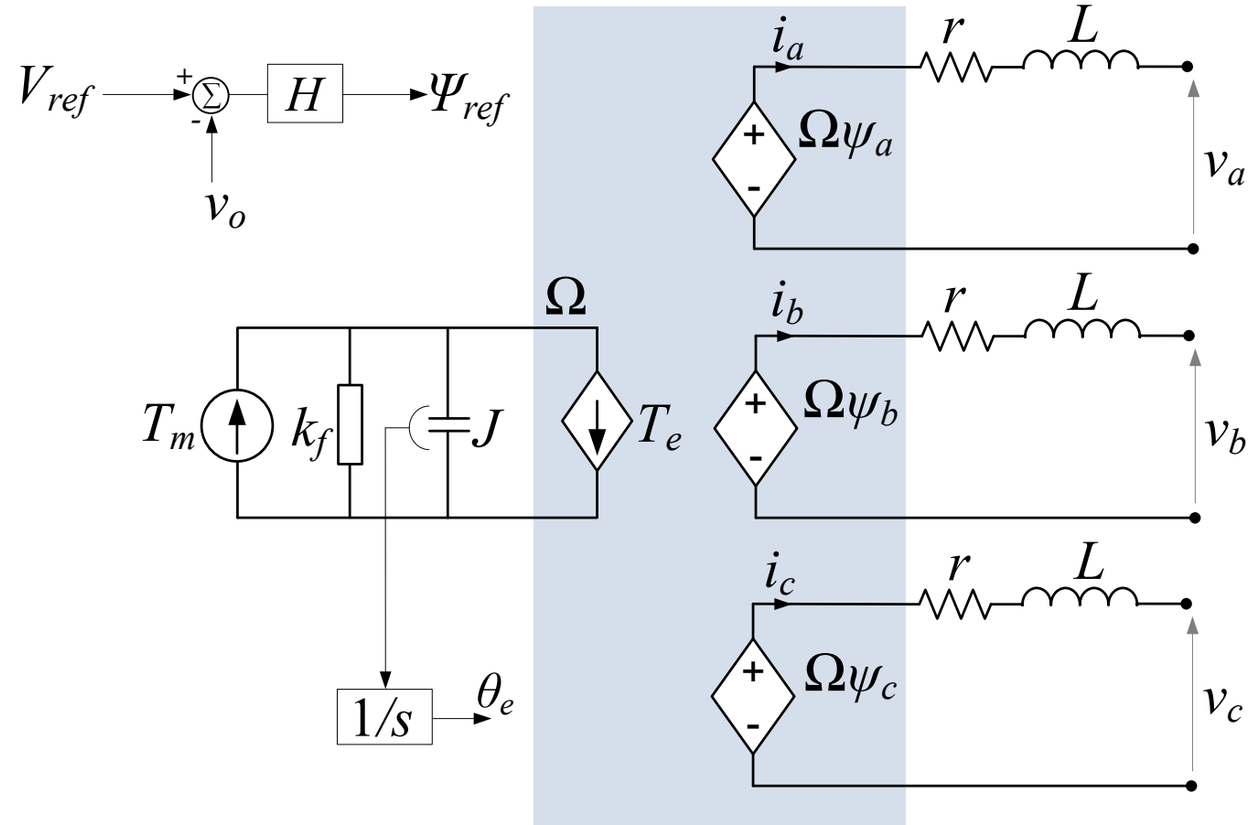

Microgrid Controller

- (Ideal) Microgrid Controller modeled serving as a supervisory control system
- Control signals sent instantaneously – no latencies included in the project Phase I
- Example of the transient when Microgrid Controller issues a battery charging command (at 0.5 s)

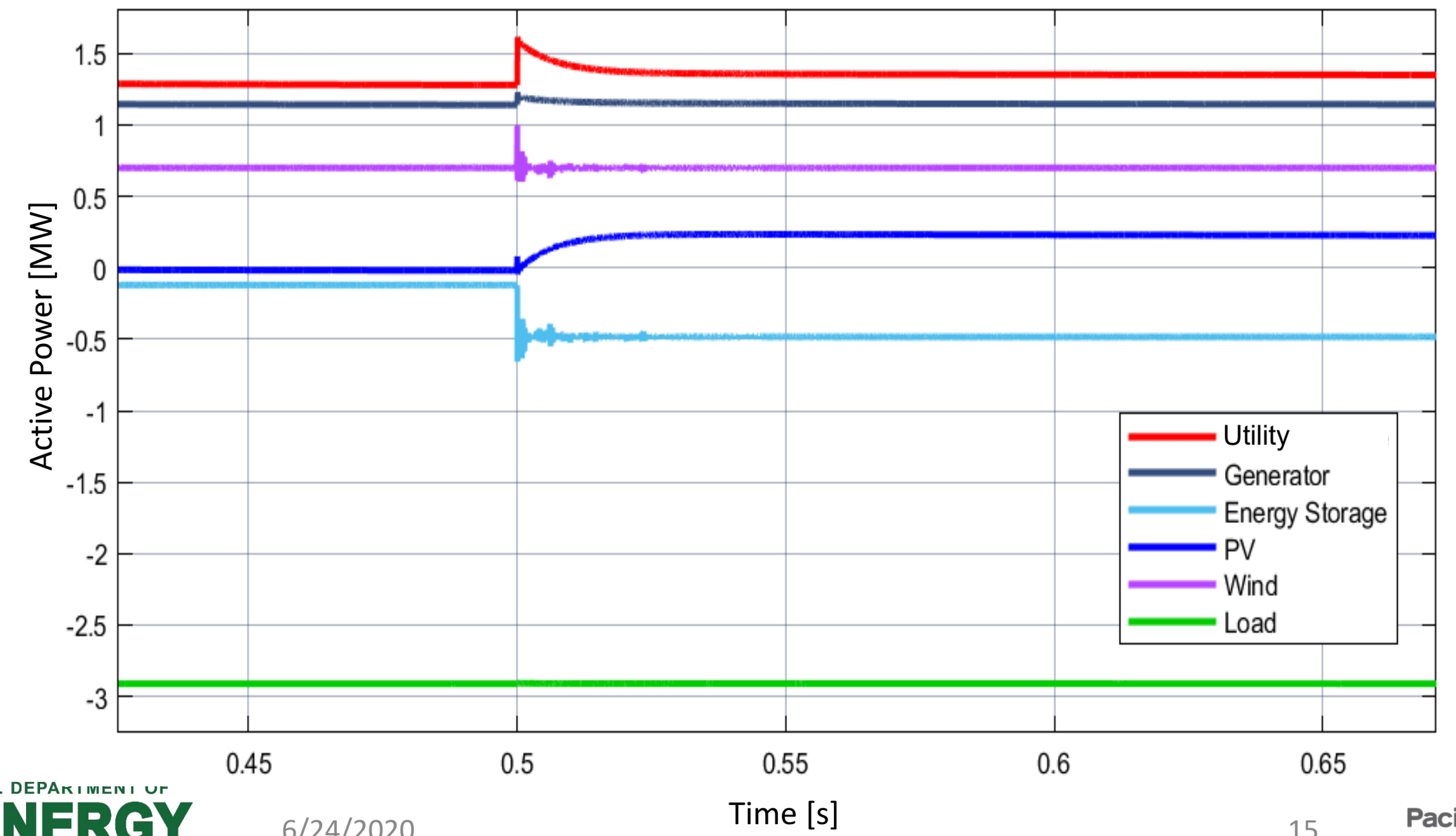

Microgrid Islanding (system-level simulation results)

- Islanding event starts at 1 s

Microgrid 13.8 V bus during islanding event

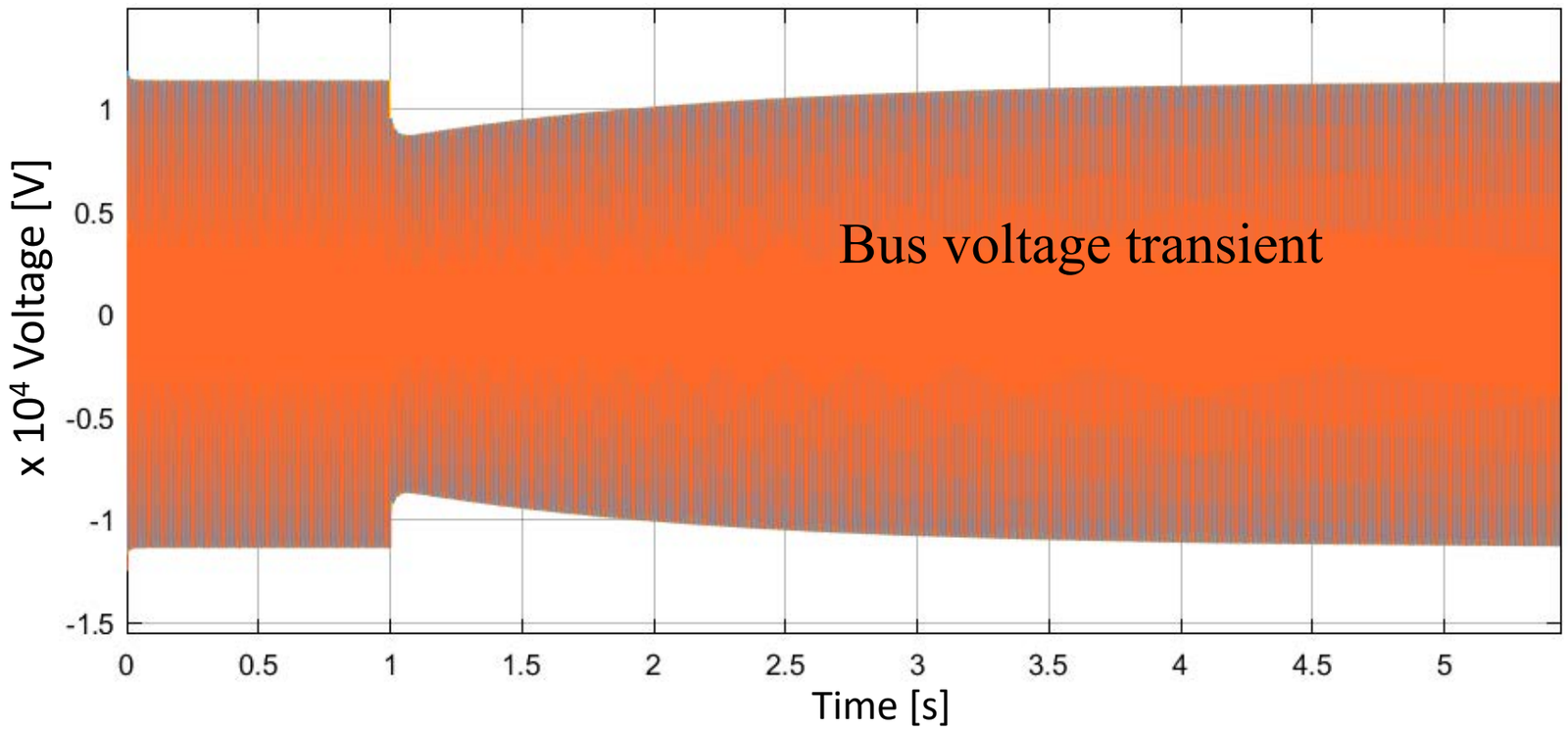

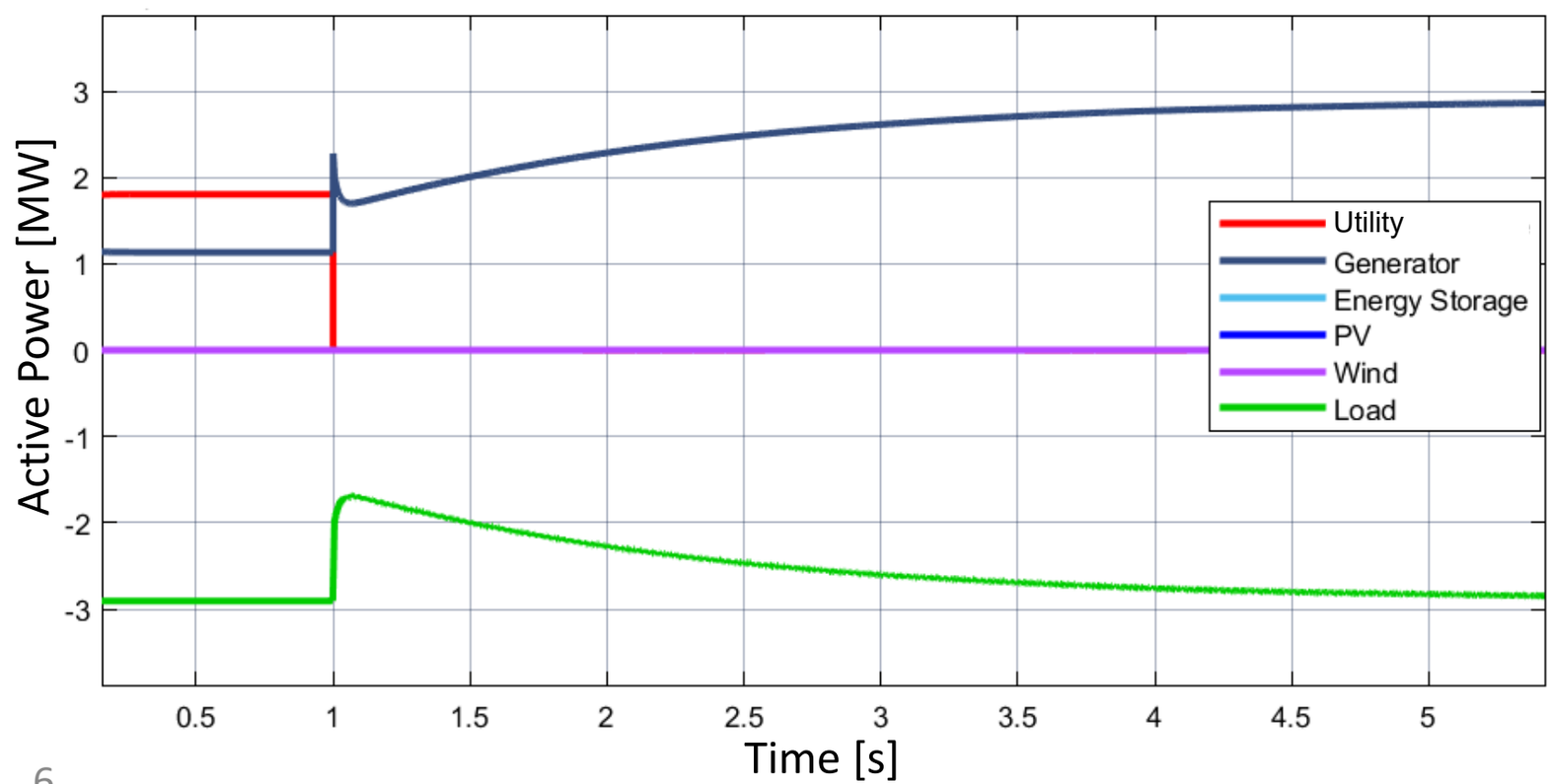

Lessons Learned

- **What Worked Well**
  - Design of a conceptual MBB – brainstorming session with experts from national labs and VT generated many new ideas
  - Integration of power conversion with microgrid control and communication
  - Using VT campus microgrid as a test case
  - Close collaboration with PNNL team
  - Close collaboration between power systems (PEC) and power electronics (CPES)
- **What Could be Improved**
  - Actual distribution system models and parameters (collaboration with VT Electric Service)

Plan for FY21

- Development of the VT Electric Service microgrid test case for validation of MBB.
- Integration and evaluation of power conversion and microgrid communication and control capabilities.
- Extension of existing models to perform a detailed comparative study of a conventional medium-voltage switchgear and the one featuring a bidirectional medium-voltage power electronics converter at its interface.
- Model expansion comprising necessary improvements and inclusion of key microgrid elements to conduct an accurate energy efficiency-related comparative study
- Simulations featuring different test-cases/modes and critical analysis of the results

Contact Information

Chen-Ching Liu
American Electric Power Professor
426A Whittemore Hall
Virginia Tech
Blacksburg, VA 24061
Tel:(540) 231-1373
ccliu@vt.edu