Driving economic growth, innovation, and workforce development





4th International Workshop on Grid Simulator Testing of Wind Turbine Drivetrains

NREL ESIF April 4th, 2017

J. Curtiss Fox


Outline

- Johnson Controls BESS
- ComRent Inductive Load Bank
- Transformer Saturation
- High Speed Motor and VFD
- Other Projects
- 2.3 Wind Turbine
- 3.2 Wind Turbine

Johnson Controls Inc. - BESS Testing

CLEMSON UNIVERSITY

Efficiency Curves: Not Points

- The efficiency of a BESS is highly dependent upon the power level
- Efficiency curves offer better insight into operational efficiency across the power spectrum
- Can be used to model system performance and enable feed-forward control schemes
- Requires highly calibrated instrumentation

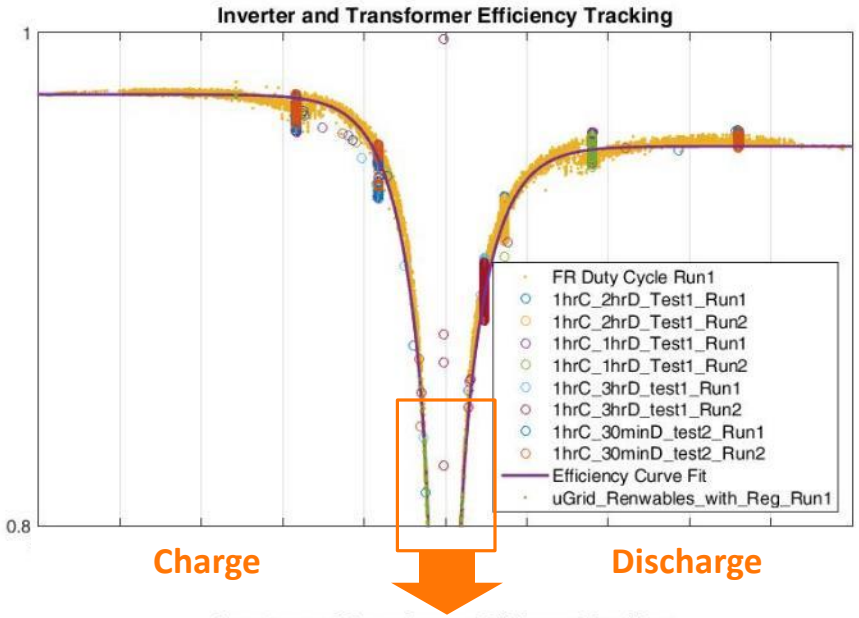

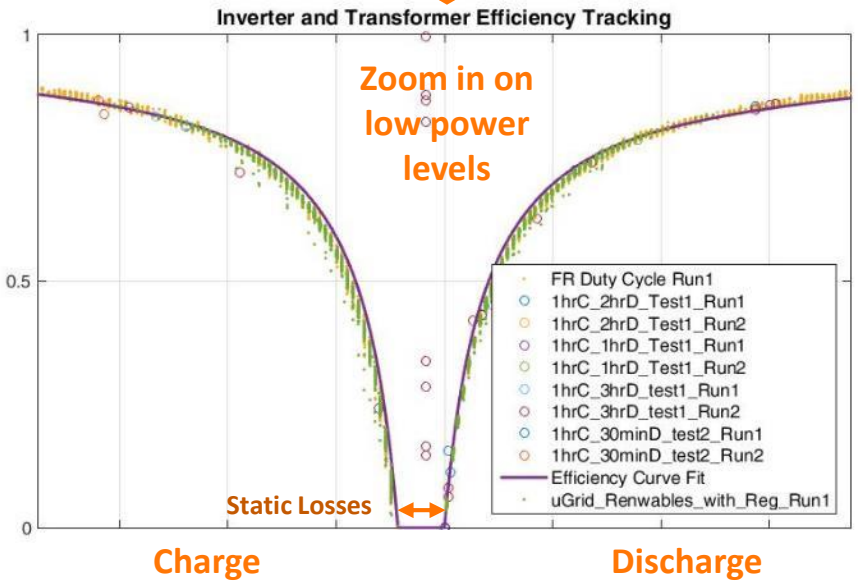

Impacts of efficiency

- Compounding value streams require coordination of the system efficiency and the desired state of charge
- While frequency regulation may have high power demands, much of the time is spent passing through zero power

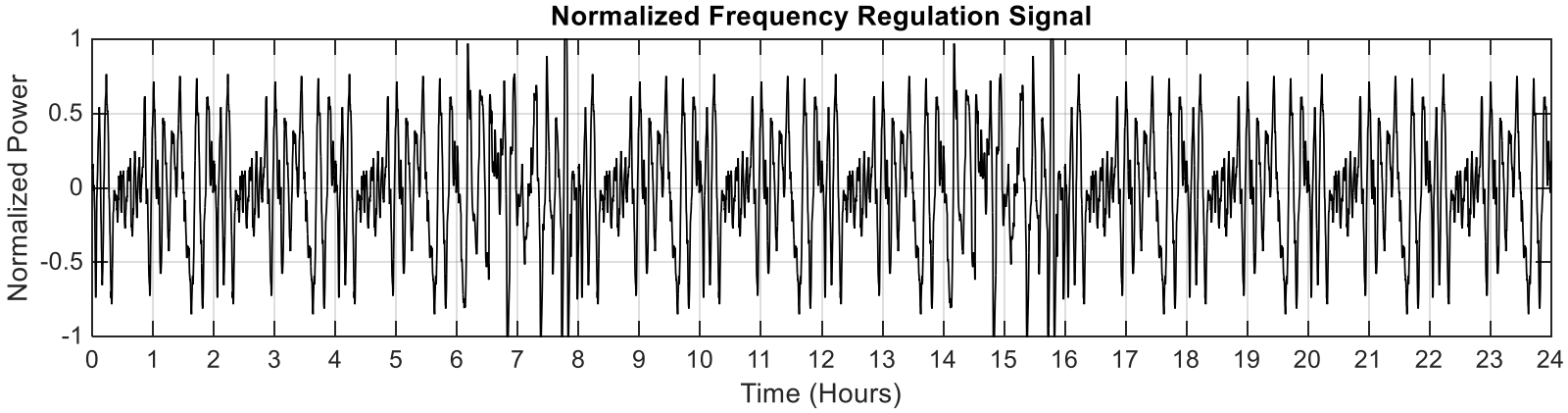

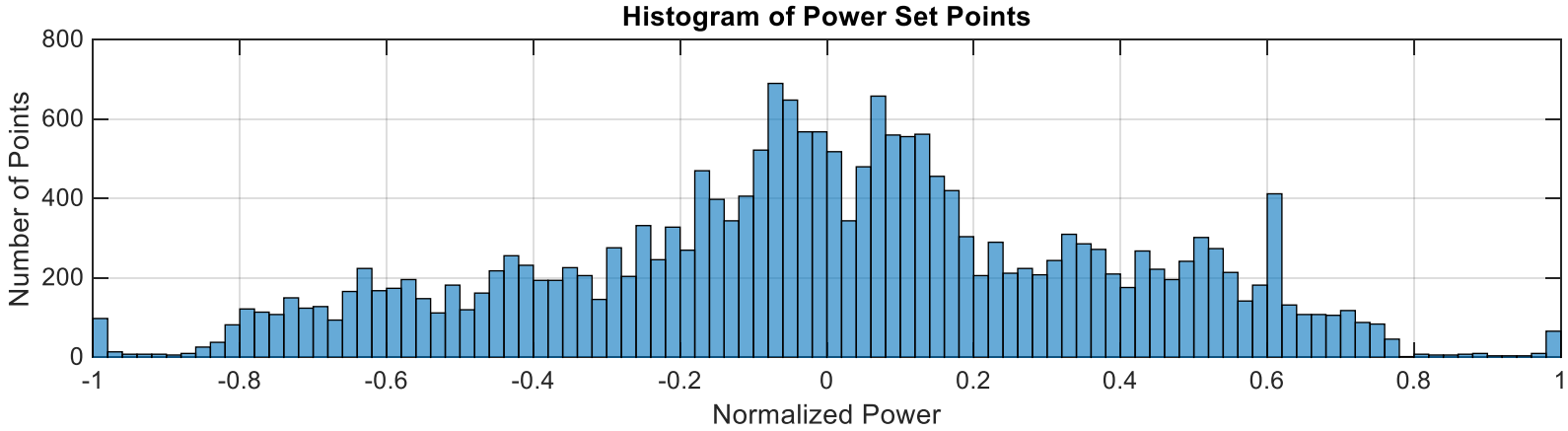

ESS: Simplified SOC Modeling

- Estimates for system state of charge can be modeled given system efficiencies
- Models do not need to be complex if they are data driven
- Very useful in setting up energy testing profiles
- Predict performance in energy applications to refine initial conditions

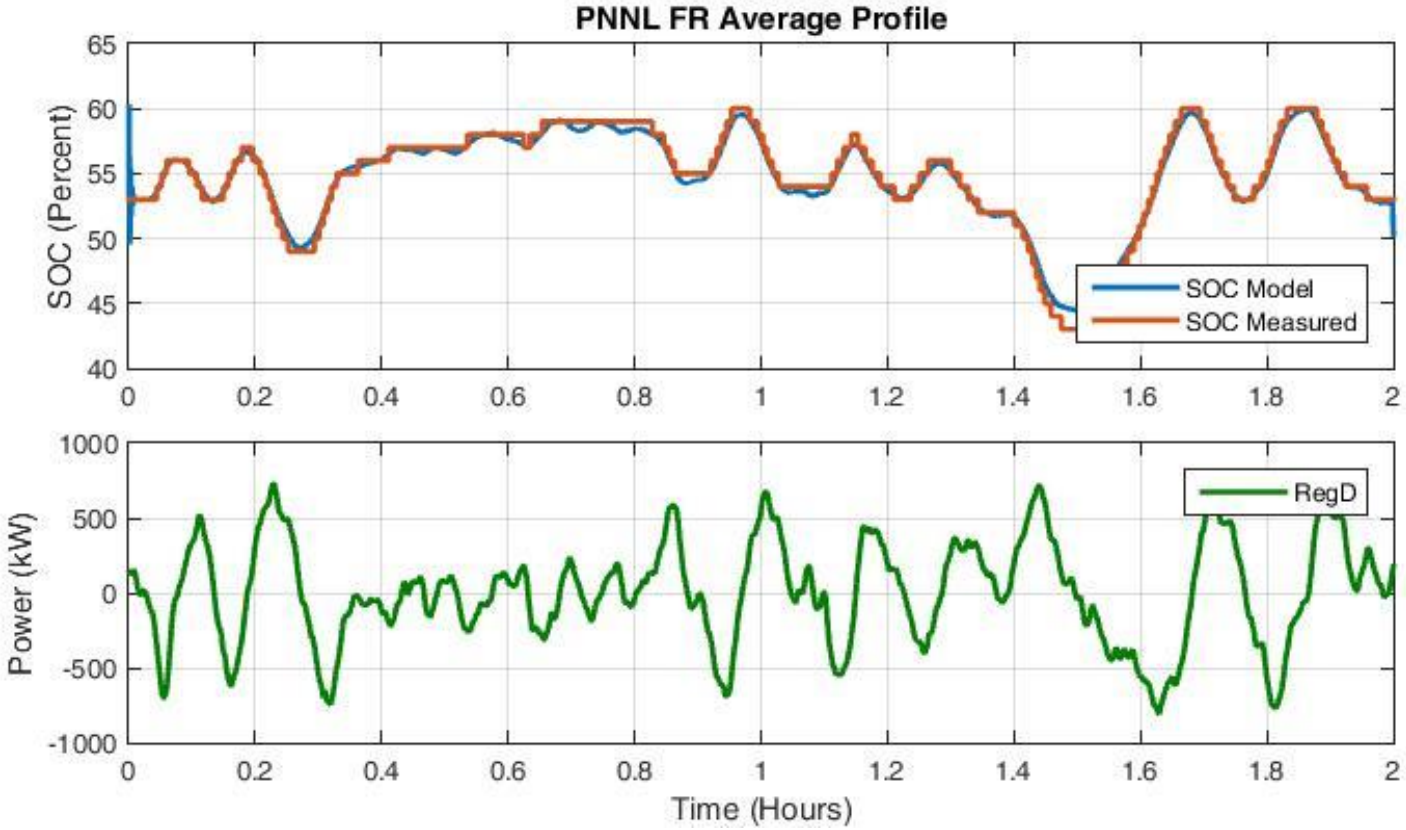

3.75 MVAR Inductive Load Bank

- 13.8 kV Inductive Load Bank
- Shipped to San Francisco for Trans Bay HVDC testing

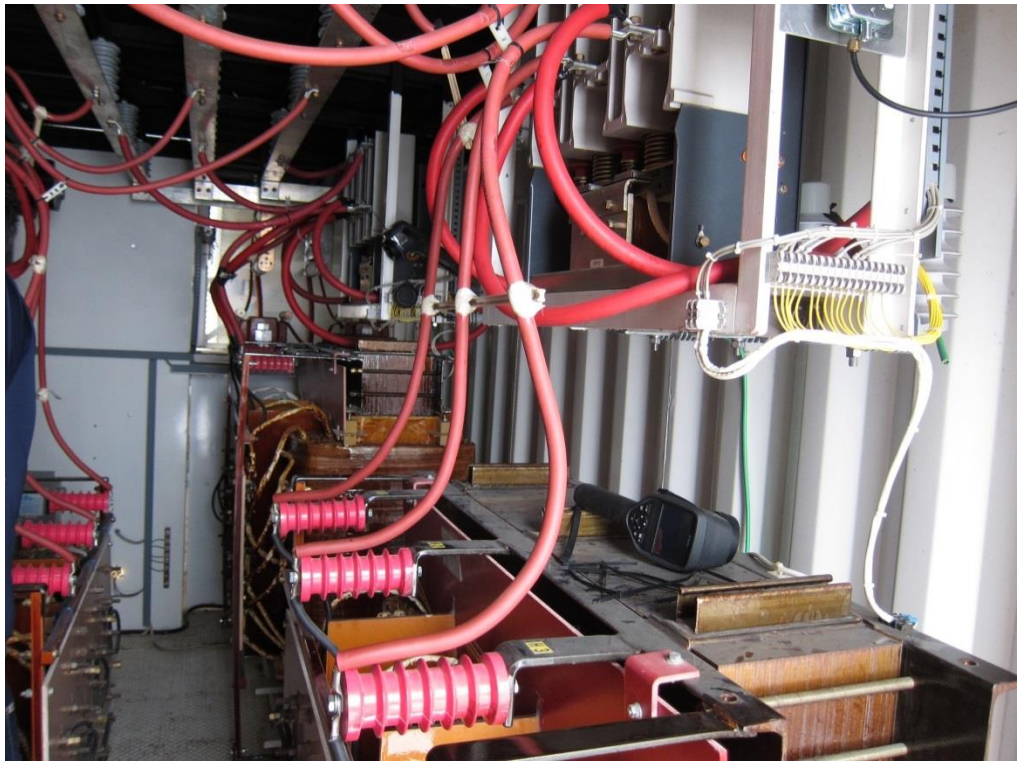

Next Generation Electric Machine

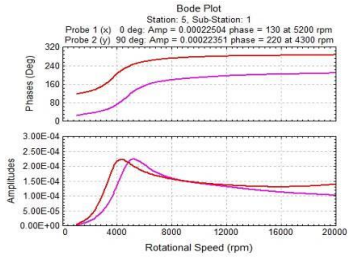

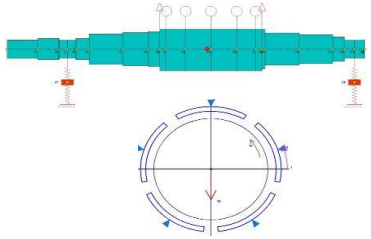

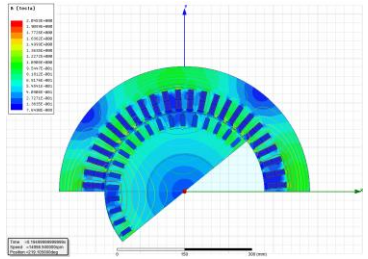

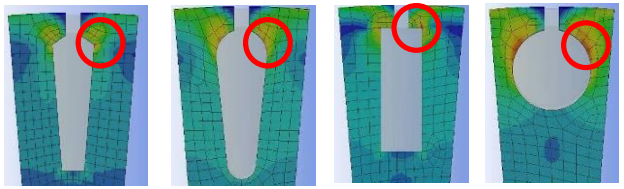

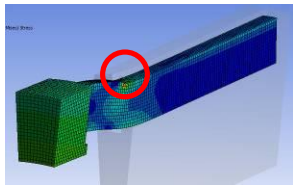

Output power	1 MW
Motor speed	15,000 rpm
Motor voltage	4.16 kV
Drive input voltage	13.8 kV
Drive topology	Series H-bridge
Switching device	1.7 kV SiC MOSFET

Power Converter Module

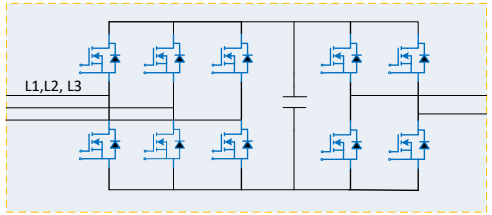

Power Converter Module Schematic

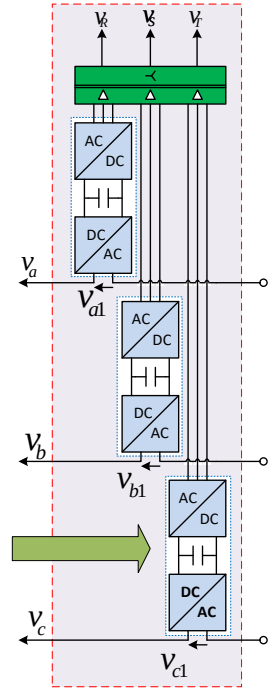

MPBB Configuration Schematic

MPBB Configuration

SiC in existing drive design: reduce losses, higher f_{sw}

High Speed Motor Topology

- 1MW, 4P, 15,000 rpm
- Core length = 14”
- Stator OD = 22”
- Rotor OD = 10”
- Air gap (magnetic) = 0.093”
- 2 TEWAC coolers (water to air)
  - 2 turbo pressure blowers with each blower circulating the air for ½ of the motor

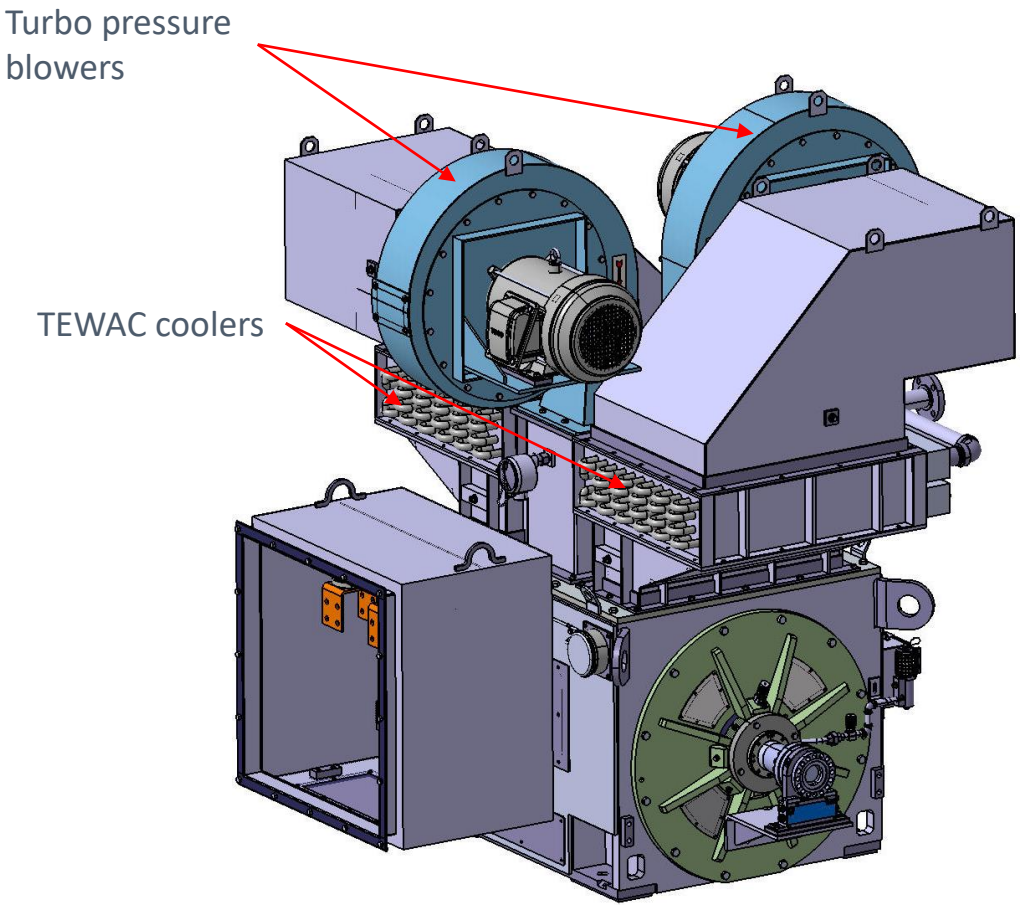

High Frequency VFD Topology

- Integrating 1700V 400A SiC MOSFET Modules
- Based on TWMC's modular VersaBridge design
- Three modules ("Slices")
- 7-level with interleaving (36-pulse)
- 2-phase cooling for high power density
- 96.2 % minimum efficiency at full load (Si devices @ 60 Hz / 600 Hz switching)

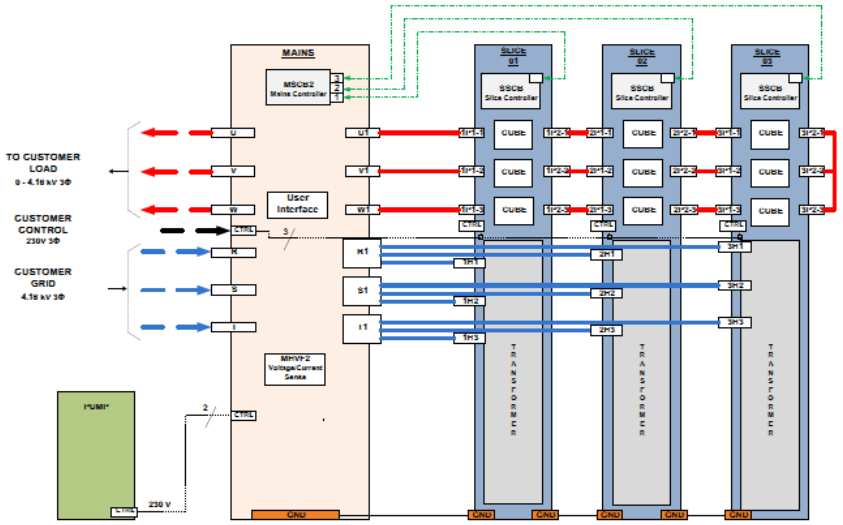

Short Circuit Protection Issues

MFG 1
SiC MOSFET

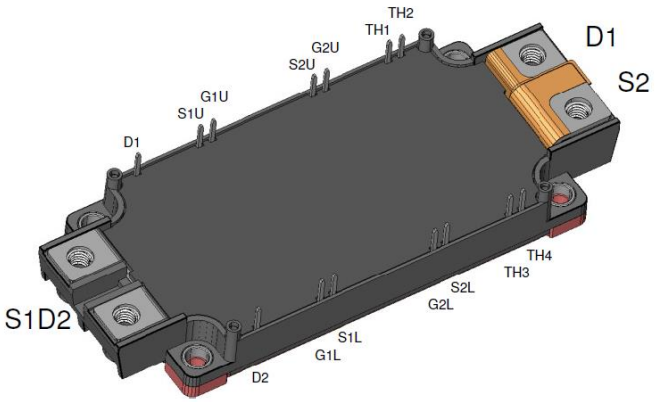

MFG 2
SiC MOSFET

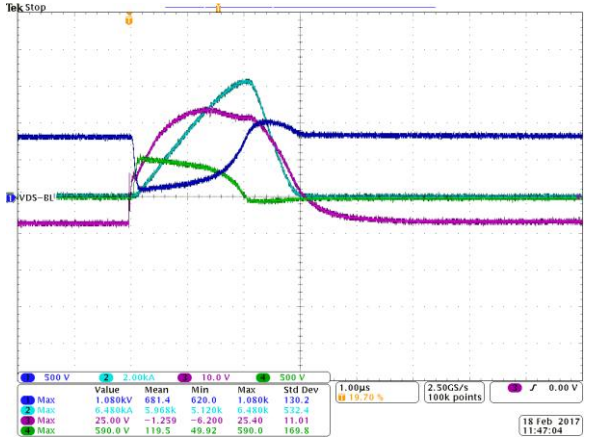

At 800VDC: Protection Works

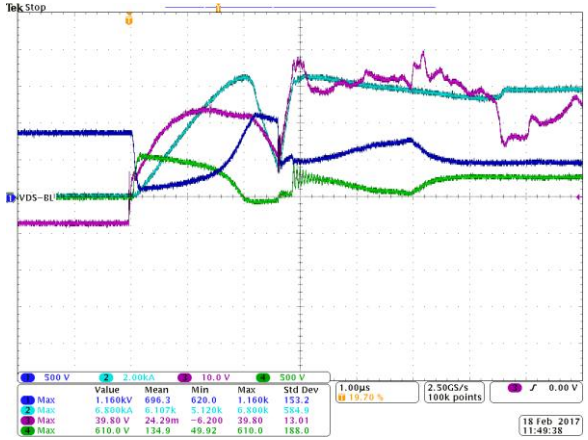

At 850VDC: Protection Fails

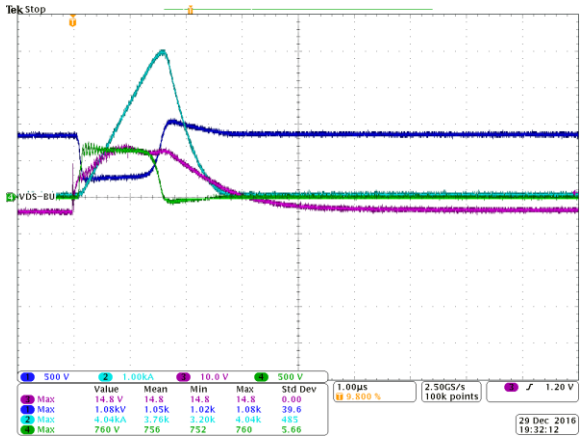

At 850VDC: Protection Works

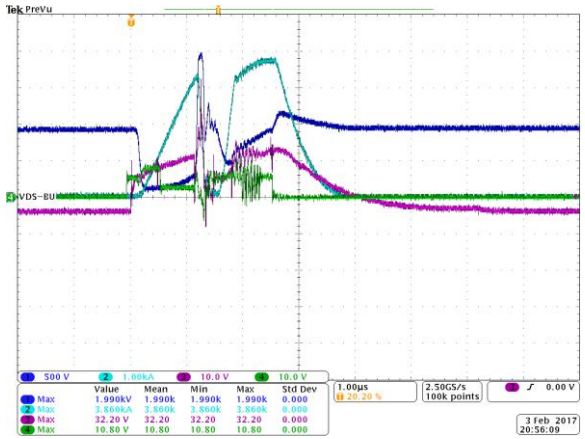

At 900VDC: Protection Fails

Wye-Wye Transformer Saturation

- Investigating the failure of a Yg-yg, 5 limb core transformer in the field
- Unique failure mechanism associated with loose leads on the dip pole allowing for a down-stream phase-to-phase connection
- This type of transformer is typical fused at 1.5 to 2.5 PU and is widely used in a power range of 100 kVA to 1500 kVA for three phase distribution
- The failure causes zero sequence voltage to be imposed on the transformer and saturate the zero sequence flux path

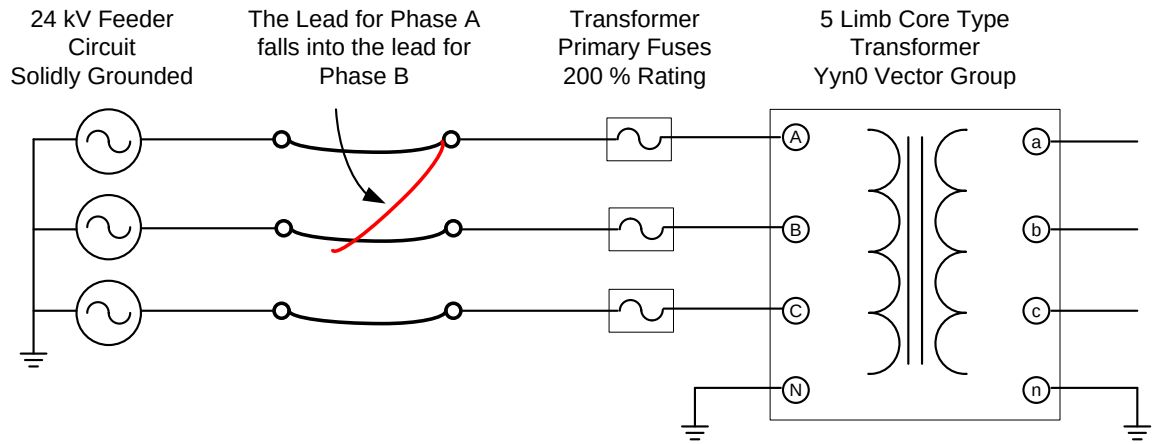

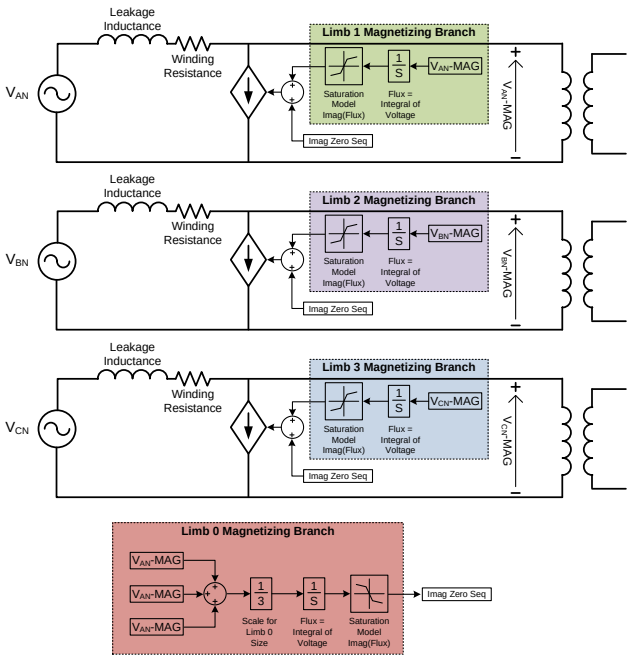

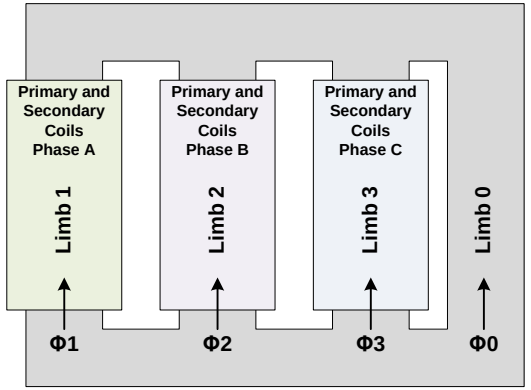

Modeled Construction of a 5 limb core

Simulated Fault Event

- Simulations demonstrate large inrush currents as misconnection is made from phase A to B
- These decay off quickly to relatively low steady state saturation current
- This saturation current can potentially be within the limits of the fusing
- Catastrophic failure is possible from this scenario

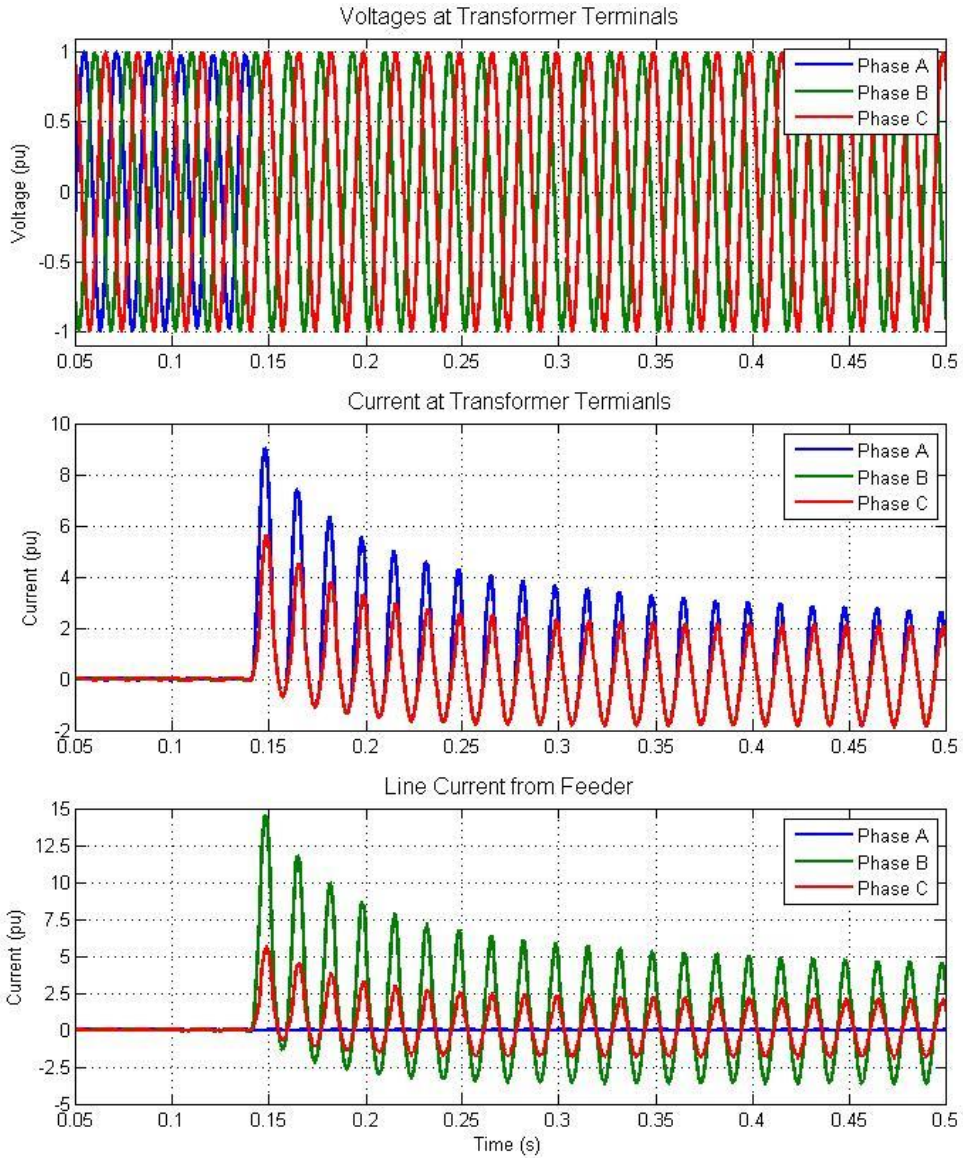

Testing a 1000 kVA Yg-yg Transformer

- Full scale testing provides data similar to simulation
- The steady state saturation current is demonstrated to be near the fuse ratings
- Future work will be to refine and validate the simulation model based upon captured data
- Calculate the power into the transformer and estimate the time to failure

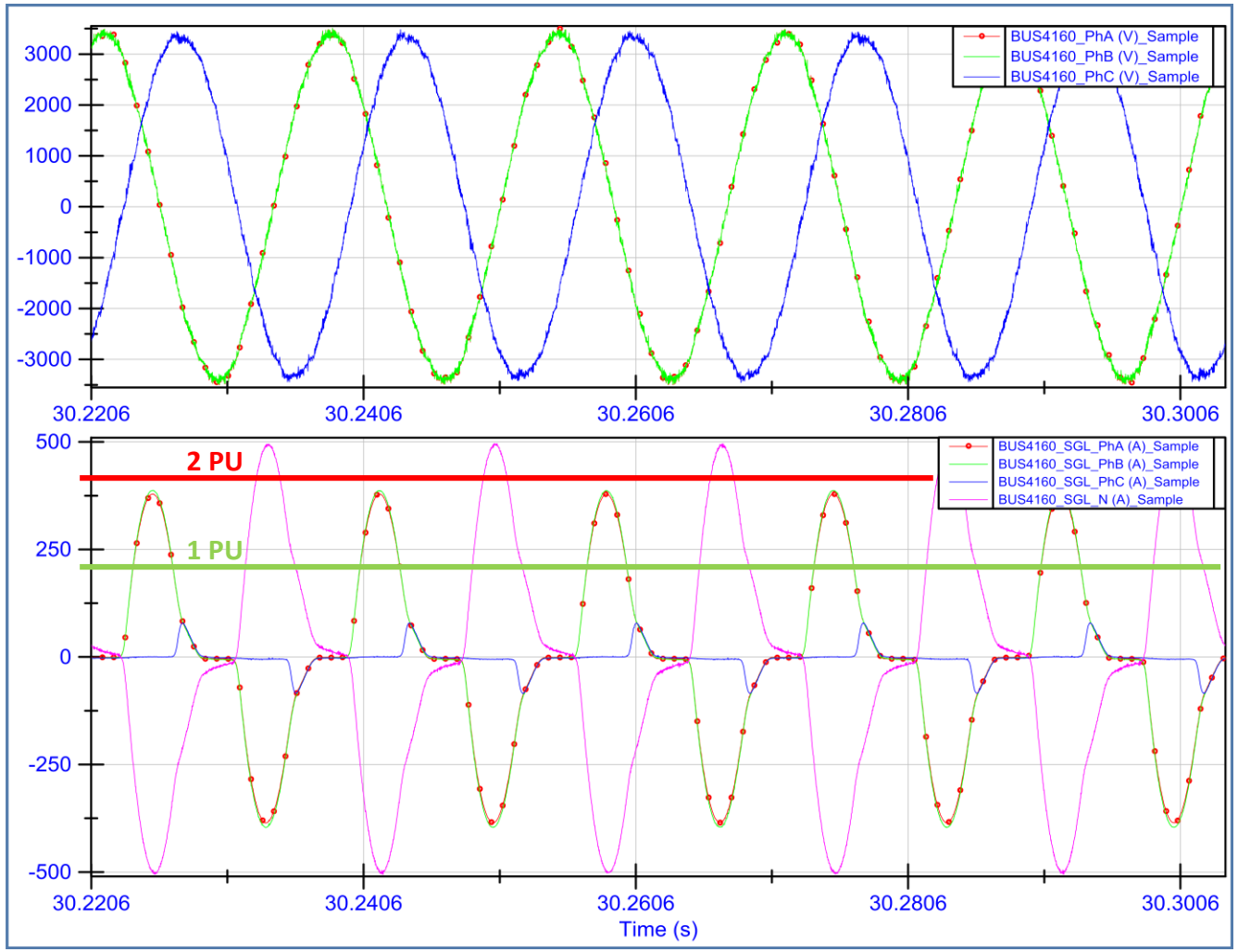

Harmonic Power Calculation

$$P = \sum_{n=1}^{\infty} V_n I_n \cos(\theta_{Vn} - \theta_{In}) \qquad Q = \sum_{n=1}^{\infty} V_n I_n \sin(\theta_{Vn} - \theta_{In})$$

	Phase A	Phase B	Phase C	Total
Active Power (P)	64 kW	63.5 kW	32.3 kW	159.7 kW
Reactive Power (Q)	437 kVAR	437 kVAR	6.9 kVAR	881.4 kVAR
Apparent Power (S)	441.8 kVA	441.8 kVA	33 kVA	895.798 kVA

Vs

No Load Core Losses

	Total
Power	0.963 kW

Thermal modelling estimates 23 min for oil to reach 104˚C.

Other Projects and Grants

- Power Line Noise Study
  - SRNL - LDRD
- Improving Distribution Transformer Efficiency and Lifetime
  - SRNL - GMLC
- Improving the Rol of Short-term Energy Storage and Large Motor Loads for Active Power Controls for Wind Power
  - NREL - GMLC
- Distributed Energy Resource Optimization
  - EPRI - NYSERDA

Multi-body Simulation Work

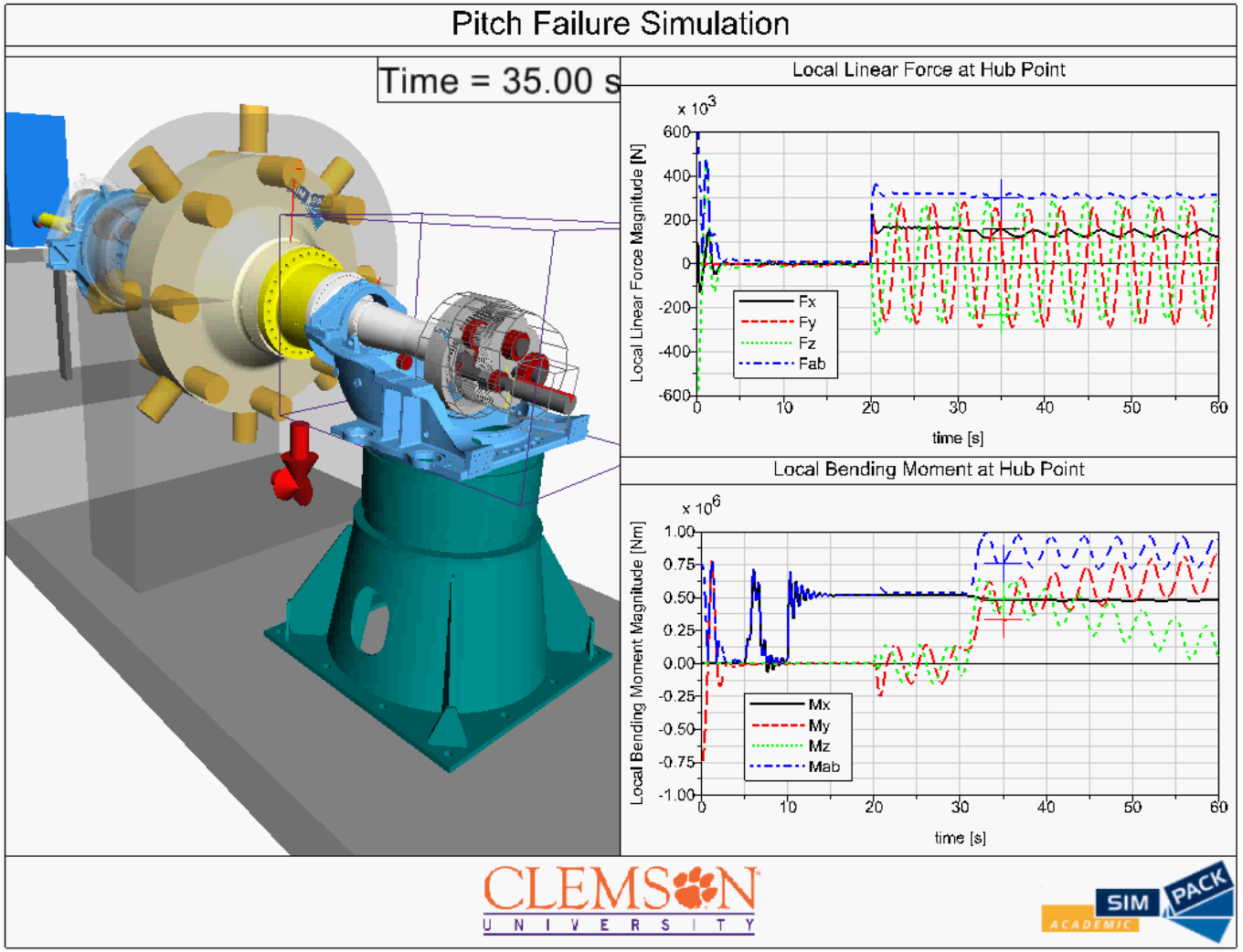

2.3 MW Nacelle Testing

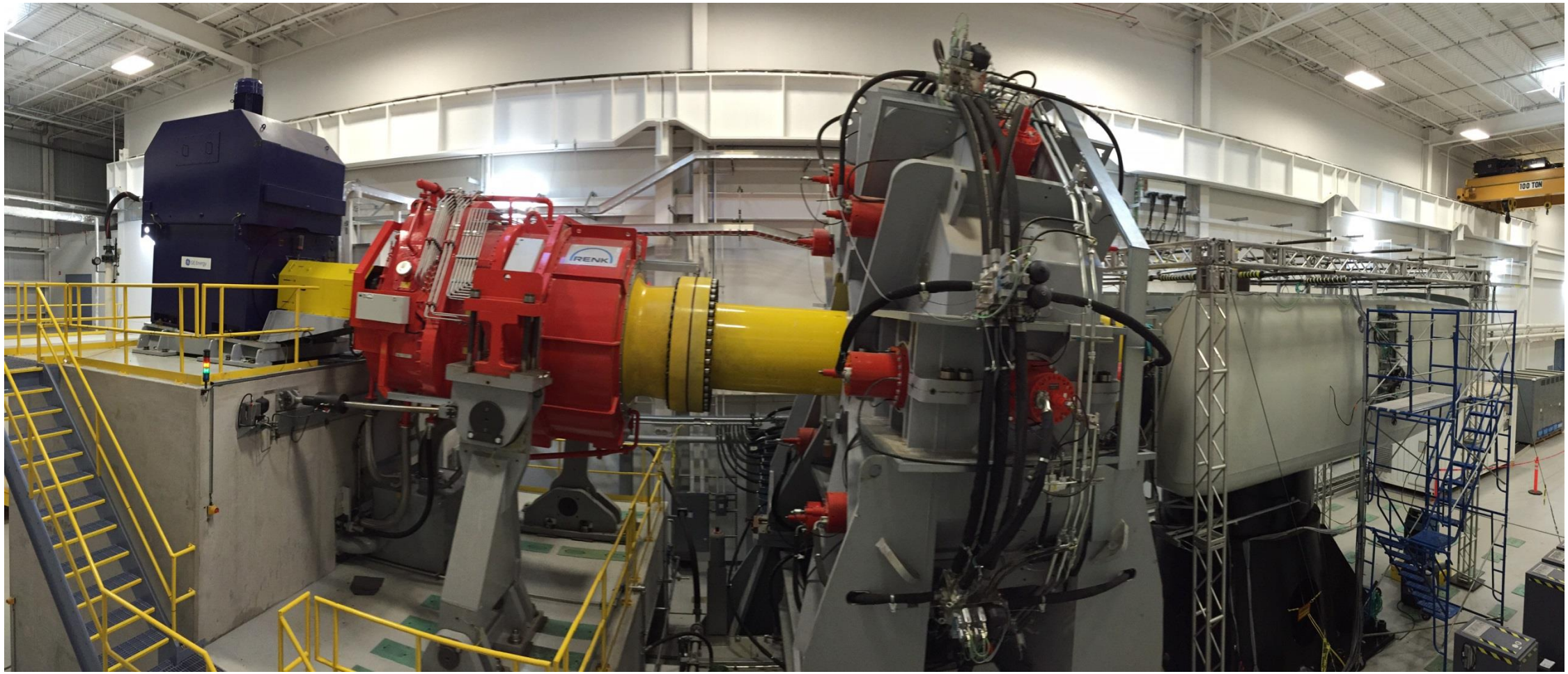

3.2 MW Nacelle

» Delivered March 2017

» Installation June 2017

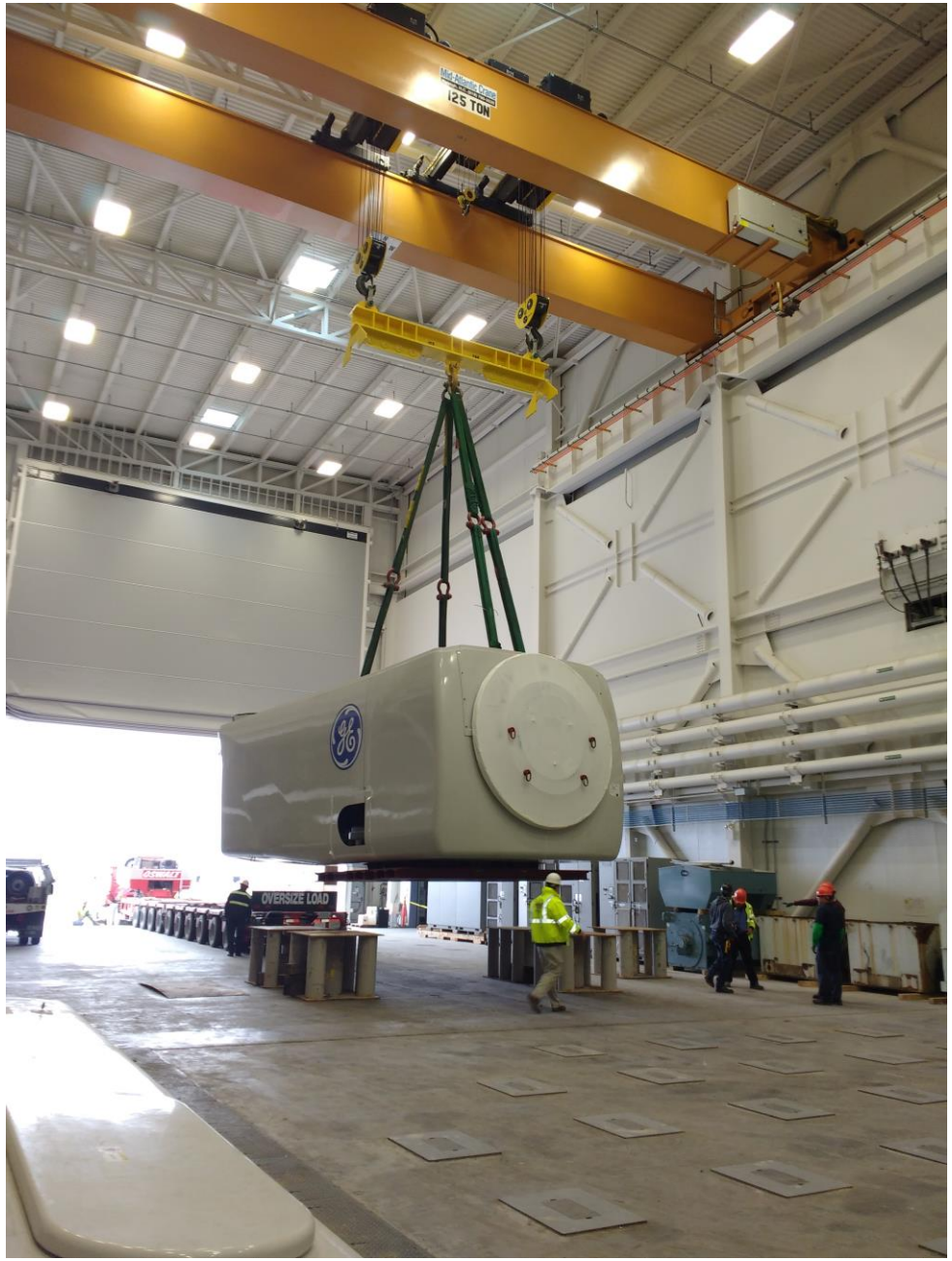

Voltage Ride-Through Testing: CA Rule 21

- Voltage ride-through testing can become very complex
- Transformers, cabling and test equipment required for system interconnection introduce voltage drops
- Dynamic reactive current requirements of the smart inverter can create dynamic voltage disturbances

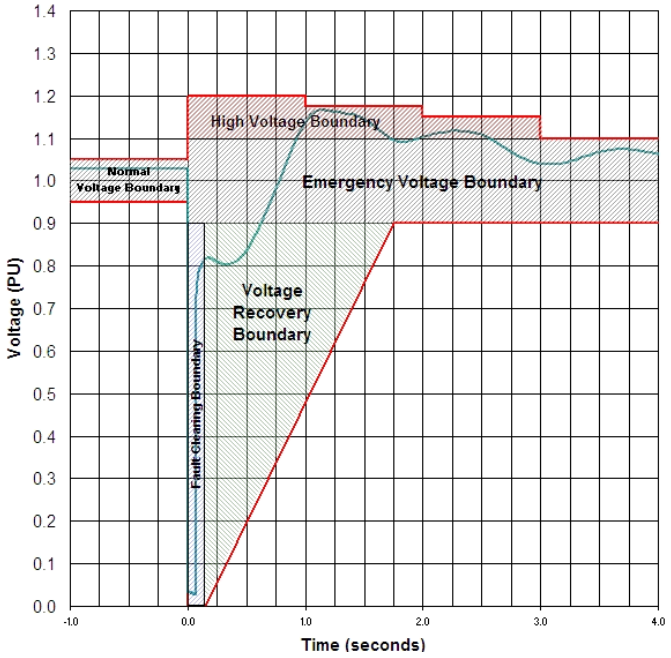

FIDVR Event with the WECC Fault Ride-Through Boundaries

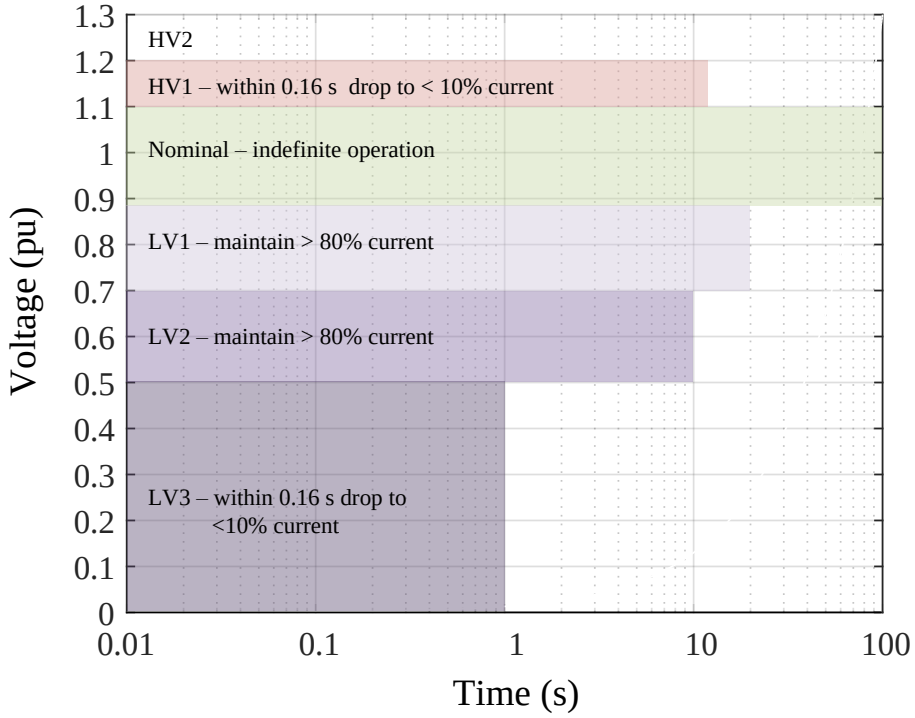

CA Rule 21 VRT Boundaries

Frequency Ride-Through

- Frequency ride-through testing is much easier than voltage ride-through
  - Everyone agrees how fast the system is rotating
- Rate of change in frequency (Hz/sec) should be maximized within control limits

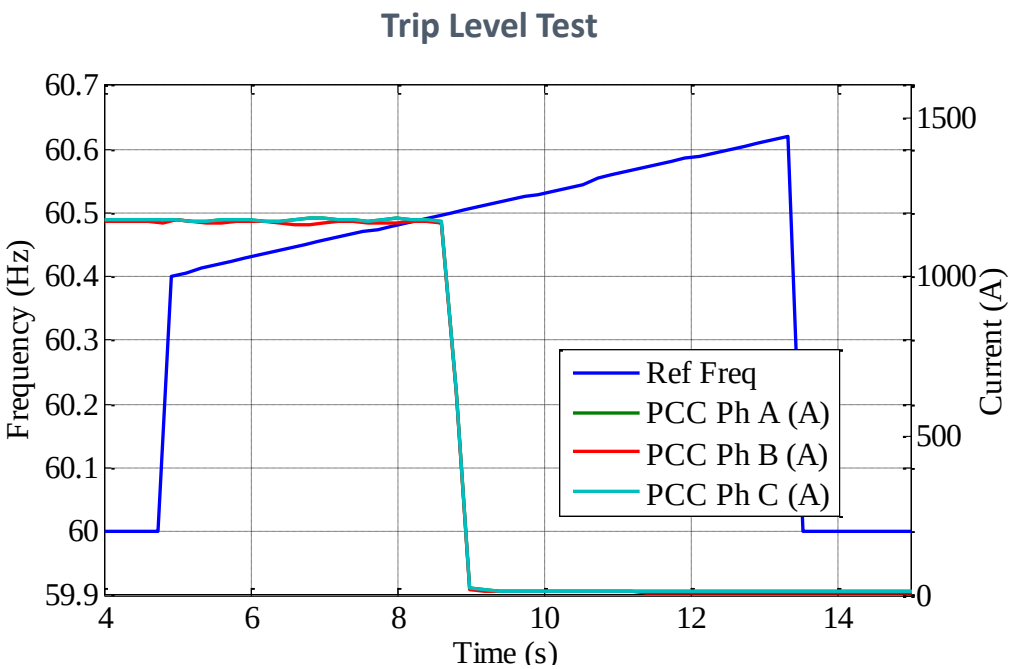

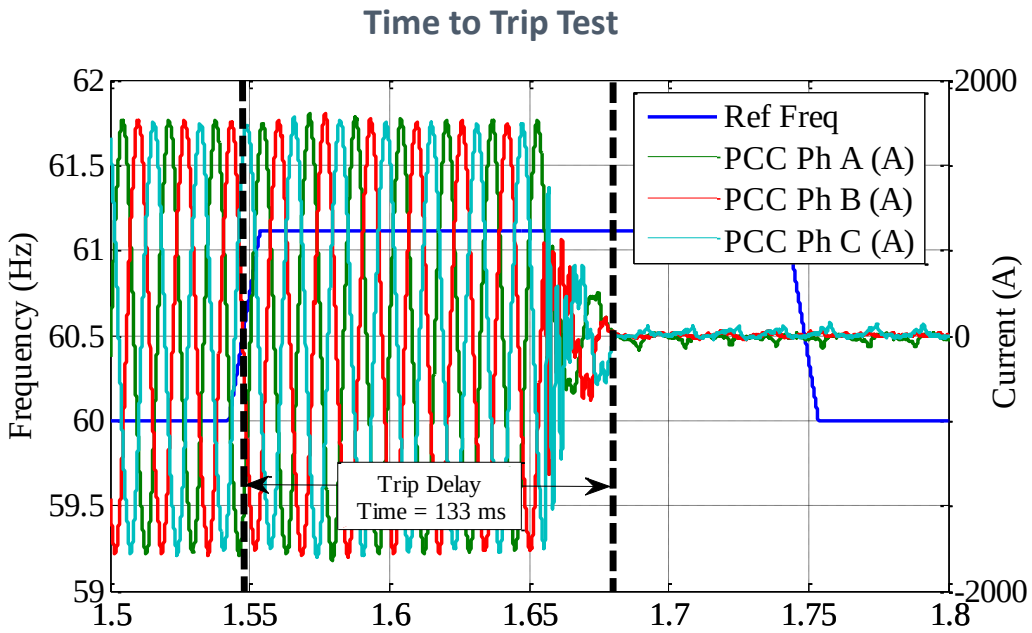

Thank You

CLEMSON
UNIVERSITY