Grid Emulation for Wind Turbine Drivetrain Testing

Anica Berthold, M.Sc.
Nurhan Rizqy Averous, M.Sc.

Gefördert durch:

Bundesministerium für Wirtschaft und Energie

aufgrund eines Beschlusses des Deutschen Bundestages

E.ON Energy Research Center | RWTH AACHEN UNIVERSITY | CWD Center for Wind Power Drives | RWTH AACHEN UNIVERSITY

Agenda

1 Center for Wind Power Drives

2 Setup Overview

3 Tests with Research Turbine

4 Summary

Agenda

1 Center for Wind Power Drives

2 Setup Overview

3 Tests with Research Turbine

4 Summary

Center for Wind Power Drives

CWD Center for Wind Power Drives

Directorate: Abel, Brecher, De Doncker, Hameyer, Monti, Jacobs, Schröder

CTO: Schelenz

Research Advisory Board: Industrial Companies

Prof. Abel	IRT	Controls
Prof. Brecher	WZL RWTH AACHEN	Gears
Prof. De Doncker	E.ON Energy Research Center	Power Electronics
Prof. Hameyer	IEM RWTH	Generators
Prof. Monti	E.ON Energy Research Center	Grids
Prof. Schröder	AIA RWTH AACHEN	Aerodynamics
Prof. Stich	fir RWTH AACHEN	Logistics
Prof. Jacobs	Chair for Wind Power Drives	Systemdesign & Test

© 2011 rha reicher haase architekten

Agenda

1 Center for Wind Power Drives

2 Setup Overview

3 Tests with Research Turbine

4 Summary

4 MW system level test bench – Overview

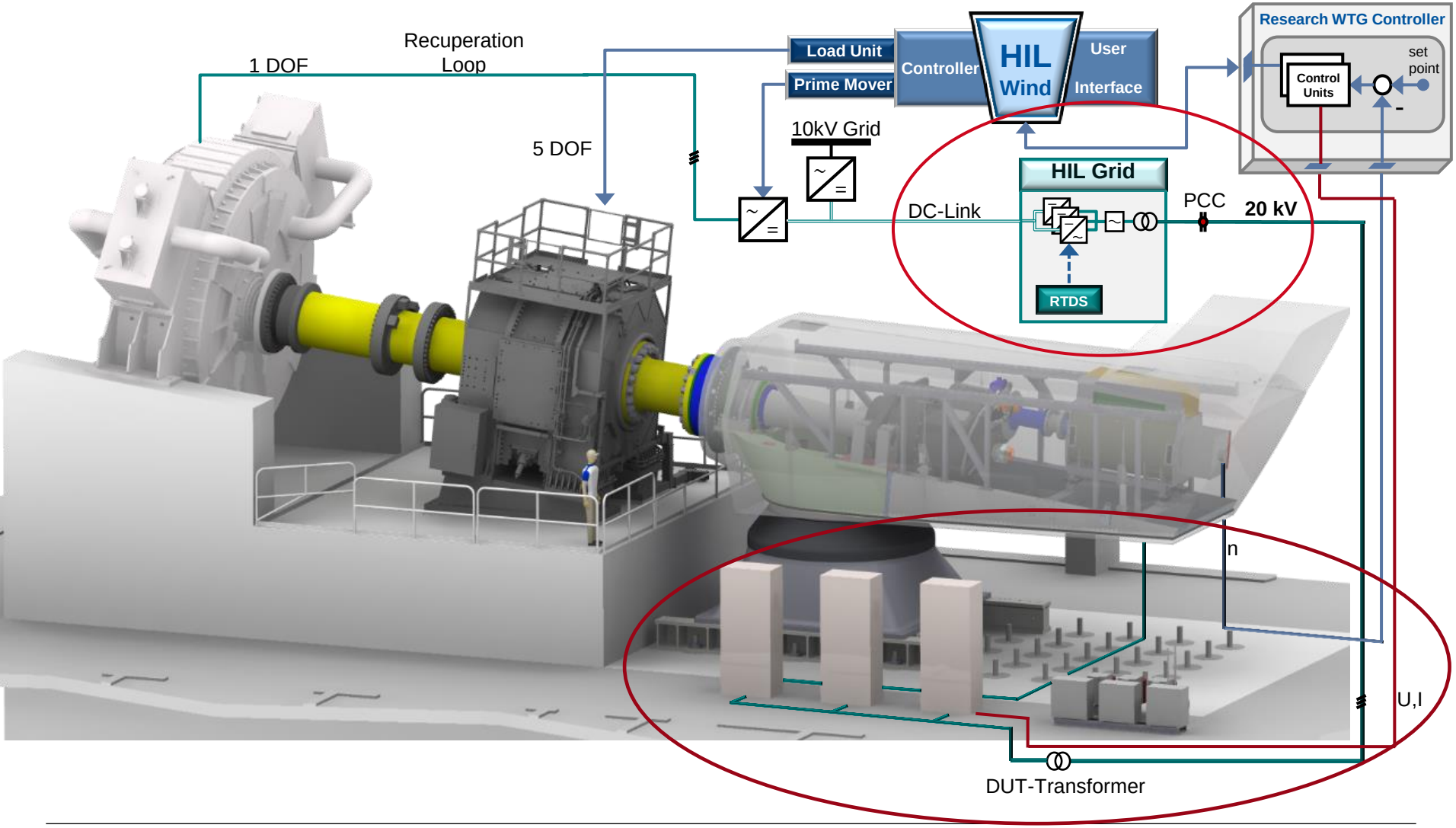

Grid Emulator

Power-Electronic Based

- Interleaved medium-voltage converters
- Programmable short-circuit impedance
- Key specification

Parameter	Value
Nominal PCC voltage	20 kV
Nominal PCC power [1)]	6 MVA
Voltage THD @ nominal voltage	< 5%
Frequency	50 Hz & 60 Hz

[1)] Short-time overload possible

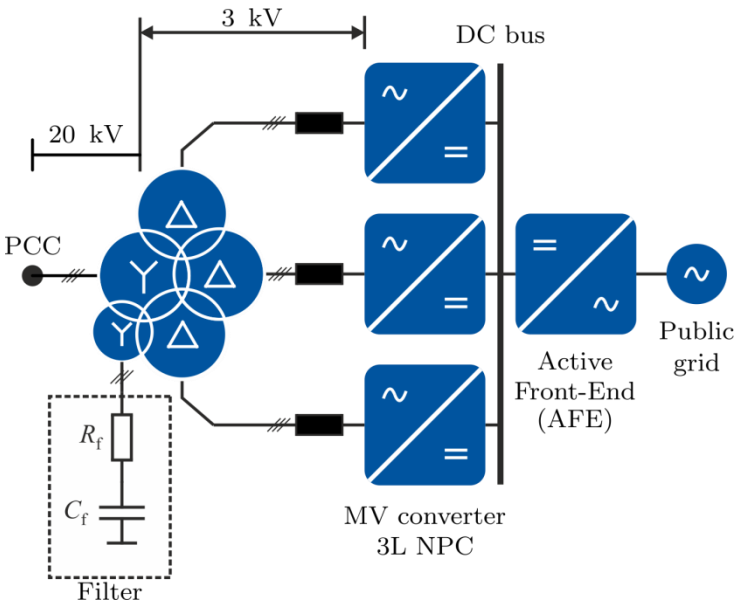

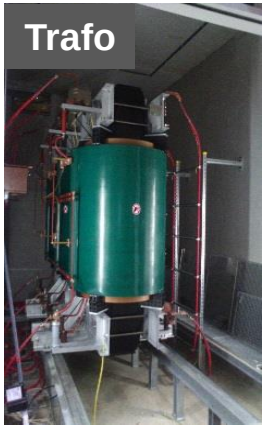

Fault Ride Through (FRT-)Tests

Advantage of the power-electronic-based grid emulator:

- Capability to generate random voltage dips
- Possibility to combine with a real time simulation for a PHIL setup

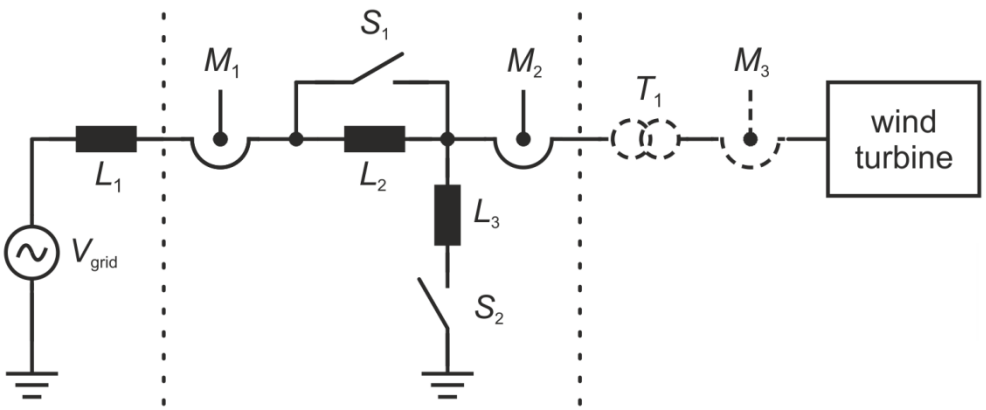

FRT container

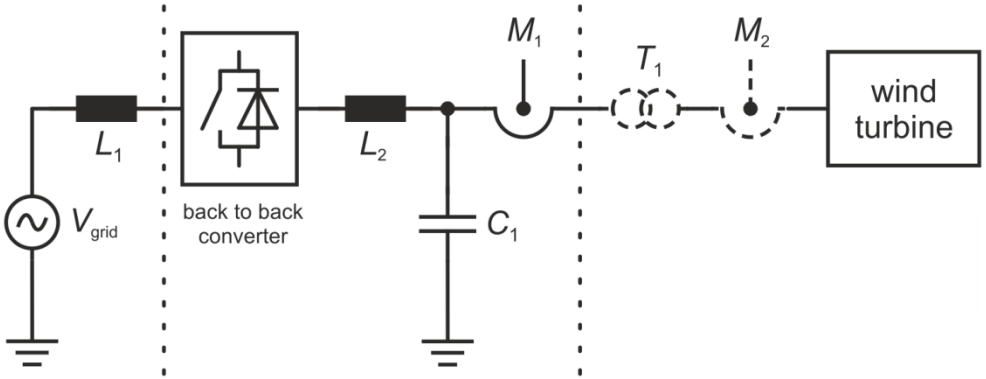

Converter based FRT dip

Connection of the Real Time Simulator

Overview of the connection of the real time simulator

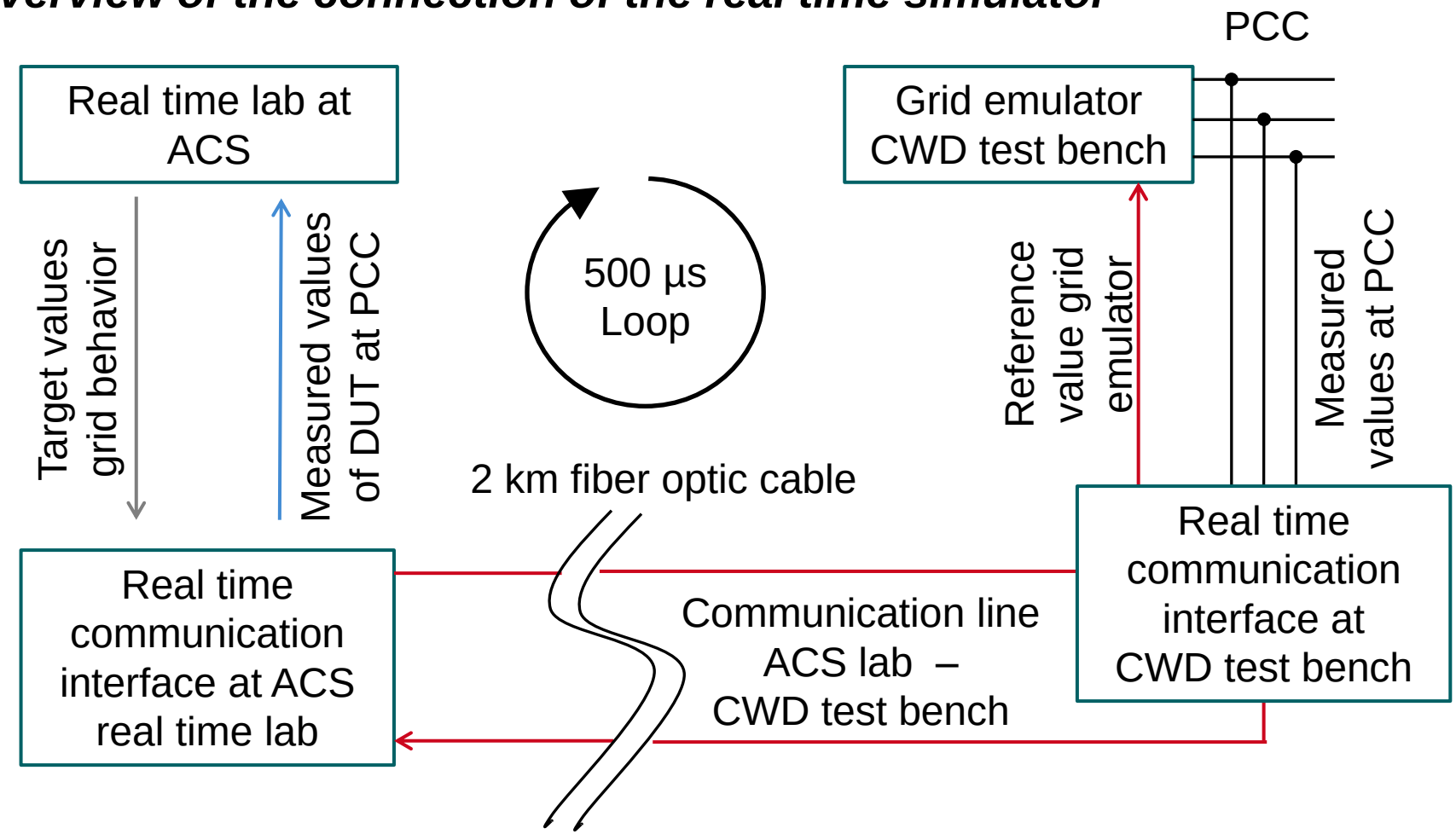

Project FVA Nacelle

SCHAEFFLER

Eickhoff

ZF

RENK

Rexroth Bosch Group

FUCHS

Vestas

HYDAC

ThyssenKrupp

FVA Software & Service

FVA Forschungsvereinigung Antriebstechnik e.V.

SIEMENS

Funding

- BMWi – 6. Energieforschungsprogramm
- Duration: 1.1.2015 – 31.12.2017
- Volume ~ 6 Mio. €

CWD Center for Wind Power Drives | RWTH AACHEN UNIVERSITY

FVA SIEMENS

Agenda

1 Center for Wind Power Drives

2 Setup Overview

3 Tests with Research Turbine

4 Summary

FVA Nacelle

Electrical Drivetrain

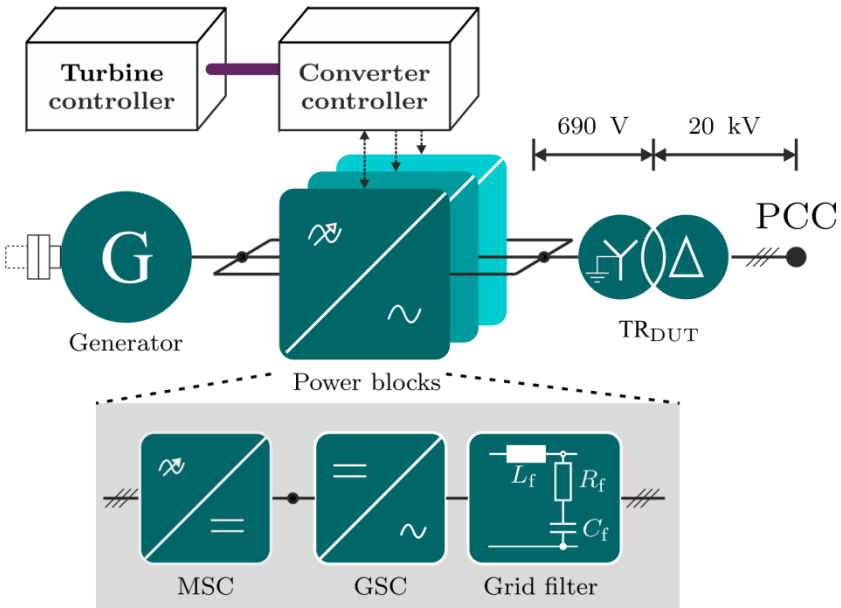

Parameter	Value
Nominal power	3.06 MVA
Nominal active power	2.75 MW
LVRT	SDLWindV 2009
Nominal generator speed	1100 rpm
Nominal generator torque	24.7 kNm

- Low-voltage full-converter concept
- Asynchronous generator

FRT Tests according to FGW TR3

Test Nr.	Fault Depth (V/V_0)	Fault Duration (ms)
1	≤ 0.05	≥ 150
2	0.20 – 0.25	≥ 550
3	0.45 – 0.55	≥ 950
4	0.70 – 0.80	≥ 1400

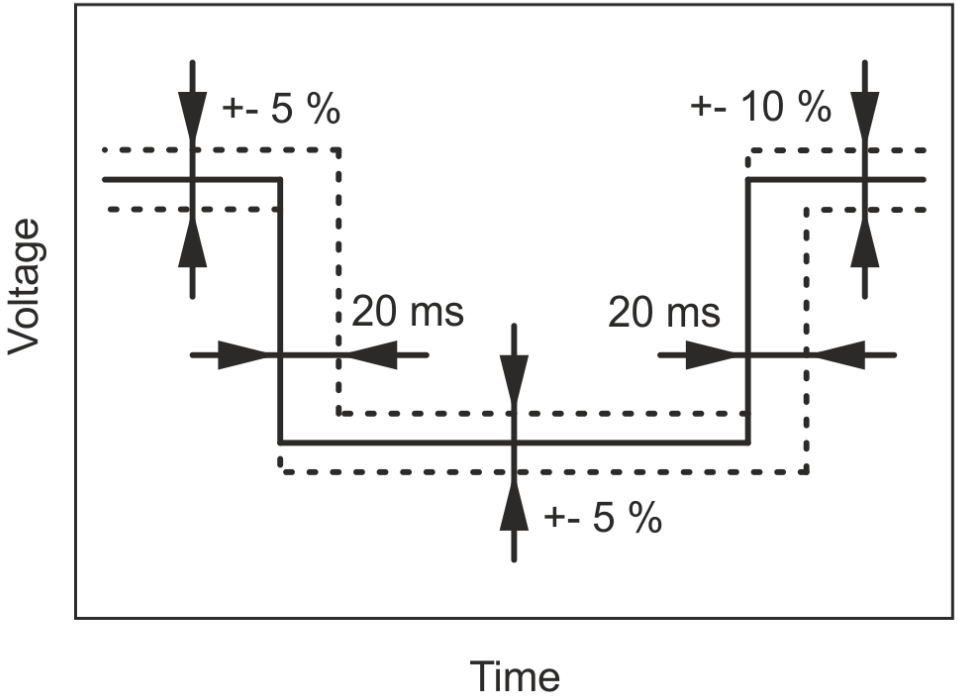

Tolerance of the FRT voltage sag according to IEC 61400-21

Test Results

No-Load Tests

Voltage quality

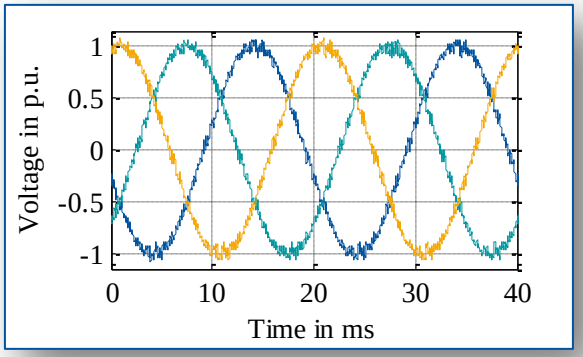

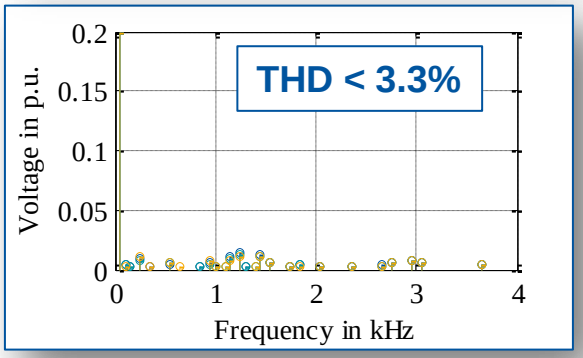

Test Results

No-Load Tests

Voltage quality

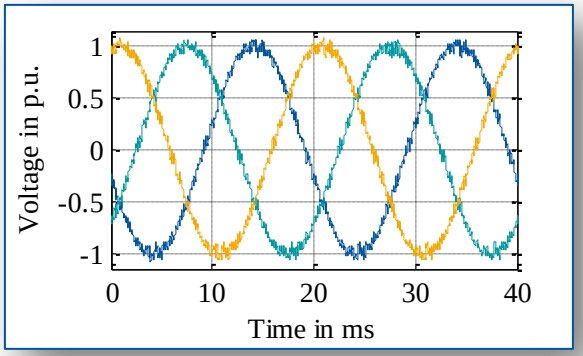

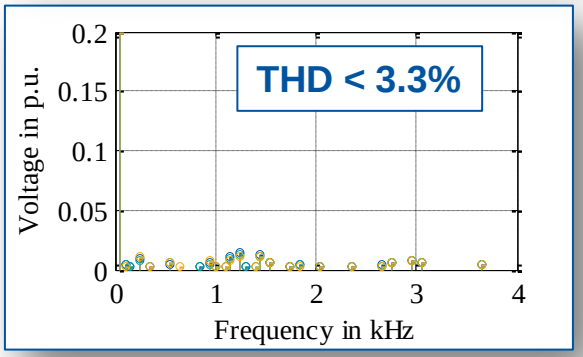

Voltage dips

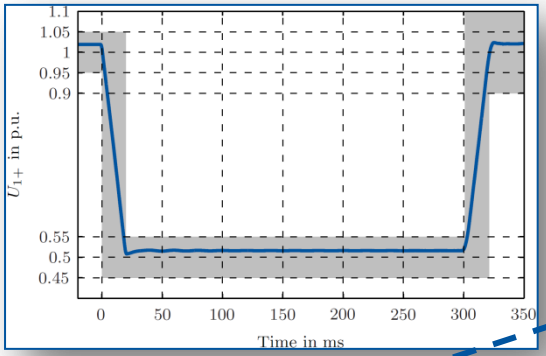

Voltage dynamic complies IEC 61400-21 (grey area)

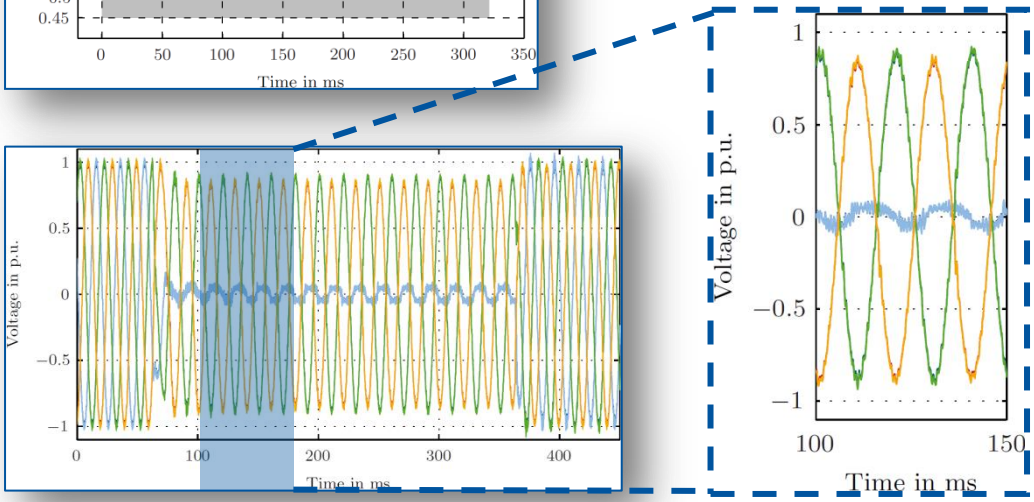

CWD Center for Wind Power Drives | RWTH AACHEN UNIVERSITY

Test Results

Fault-Ride-Through (FRT) Tests

5% symmetrical voltage dip

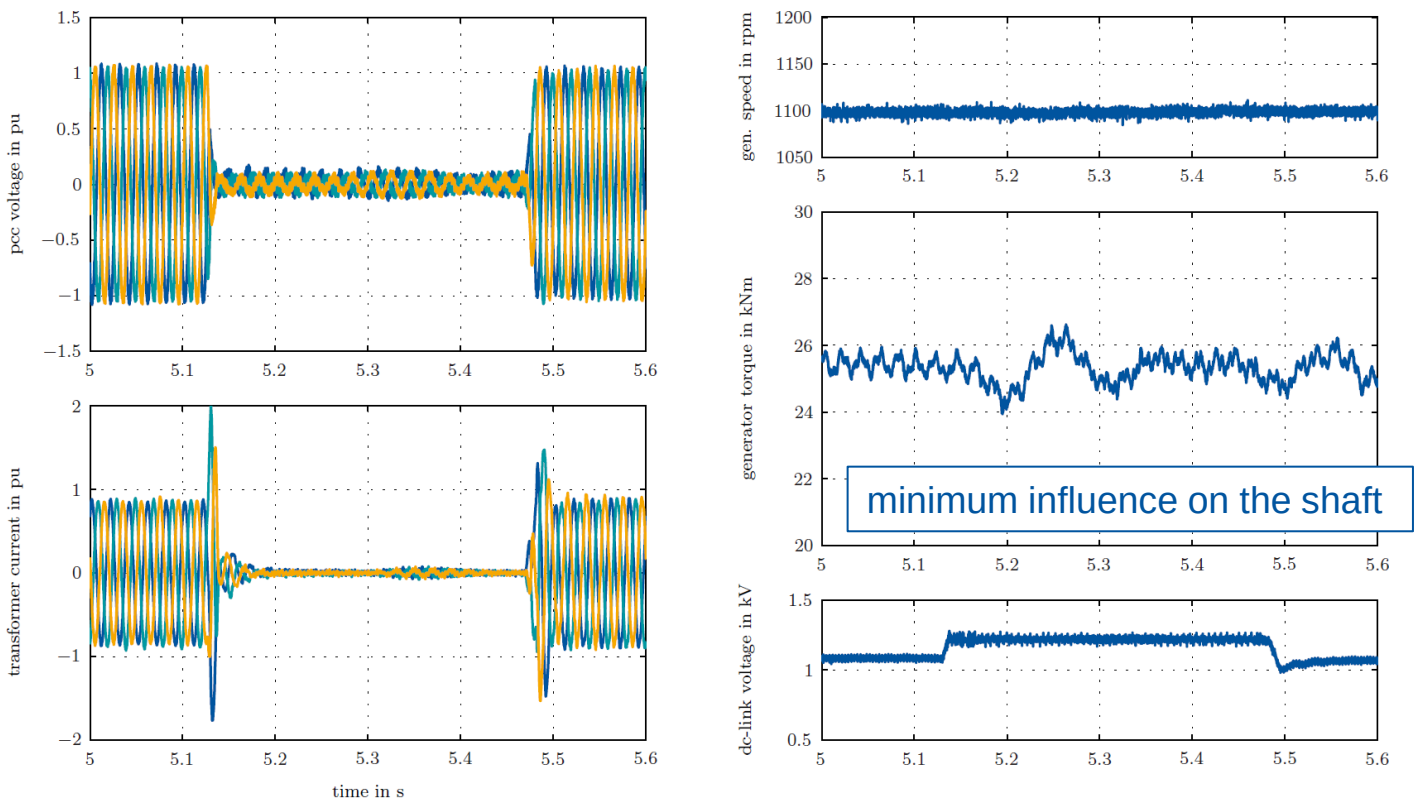

Test Results

DUT Trafo saturation

- Due to an abrupt voltage change
- Depending on the fault-voltage waveform

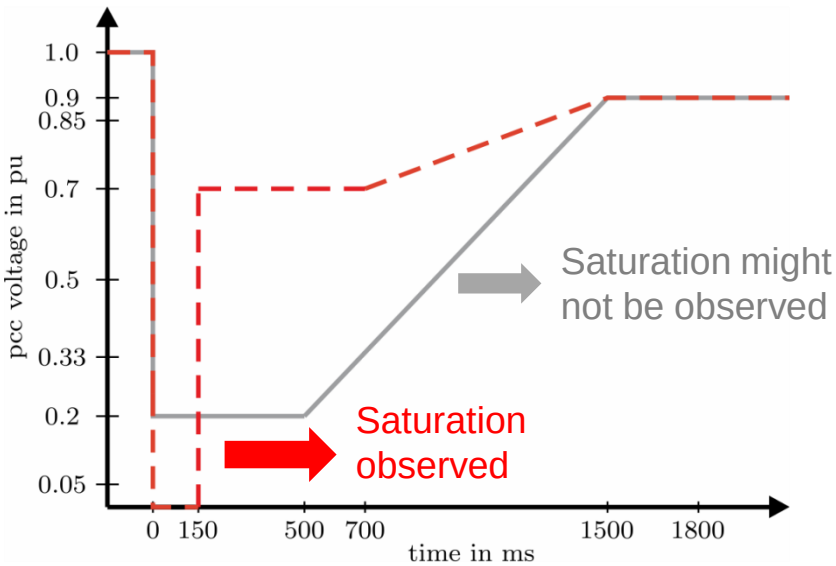

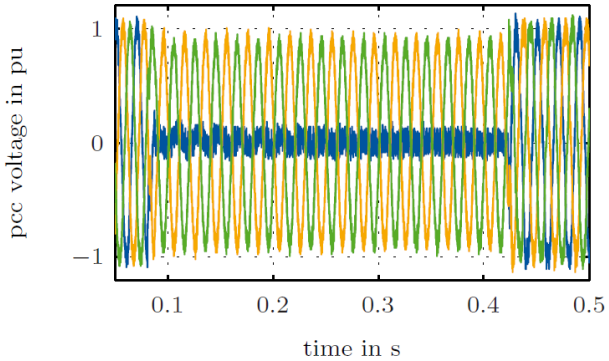

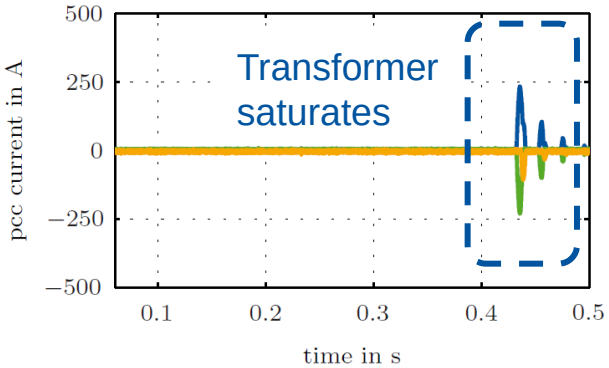

Agenda

1 Center for Wind Power Drives

2 Setup Overview

3 Tests with Research Turbine

4 Summary

Summary

- Power-electronics-based grid emulator in operation
- RTDS will be integrated for a PHIL setup. Distance between RTDS and test bench is the main challenge.
- Successfully conducted LVRT test on the newly developed research turbine according to the standard
- Transformer saturation observed depending on the applied voltage waveform

Contacts

Center for Wind Power Drives
RWTH Aachen University
Campus-Boulevard 61
52074 Aachen
Germany

E.ON Energy Research Center
RWTH Aachen University
Mathieustraße 10
52074 Aachen
Germany