Advanced Protection for Microgrids and DER in Secondary Networks and Meshed Distribution Systems

Matthew Reno, Michael Ropp

Microgrid Program Peer Review

July 2022

Sandia National Laboratories is a multimission laboratory managed and operated by National Technology & Engineering Solutions of Sandia, LLC, a wholly owned subsidiary of Honeywell International Inc., for the U.S. Department of Energy's National Nuclear Security Administration under contract DE-NA0003525.

Advanced Protection for Microgrids and DER in Secondary Networks and Meshed Distribution Systems

Objectives & Outcomes

Key objective: Development and demonstration of new protection techniques that reliably differentiate between primary-side faults, and export of DER-generated power from the network to the primary side.

Key outcome: Increased utilization and deployment of DERs in secondary networks, and ultimately deployment of high-reliability, high-resilience microgrids in and with looped distribution.

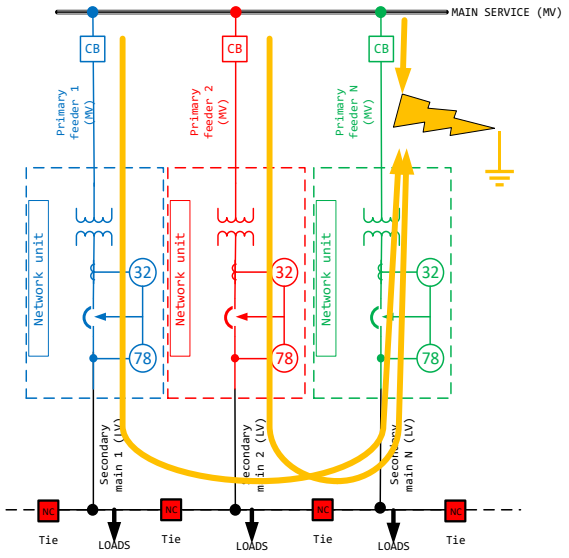

Technical Scope

- Design novel protection methods for meshed systems that are robust to DER and microgrids with low fault currents and reverse flows
- Incorporation of grid-following and grid-forming DER in dynamic EMT simulations of secondary networks
- Real-time hardware-in-the-loop testing of network protector relays to validate developed protection techniques
- Development of appropriate standards for advancement of the equitable integration of DER and microgrids in networked systems

Funding Summary ($K)

FY21 & prior, authorized	FY22, authorized	FY23, requested
$0k	$500k	$500k

Sandia National Laboratories

QUANTA TECHNOLOGY

Background - Secondary Network Protection

Downtown secondary networks provide high reliability, but also present a new set of protection challenges because of the meshed low-voltage system

The low voltage system is fed from many network units for increased reliability and efficiency

A fault on the medium-voltage or in the transformer is fed through the secondary network, so network protectors are used to very quickly trip on reverse faults

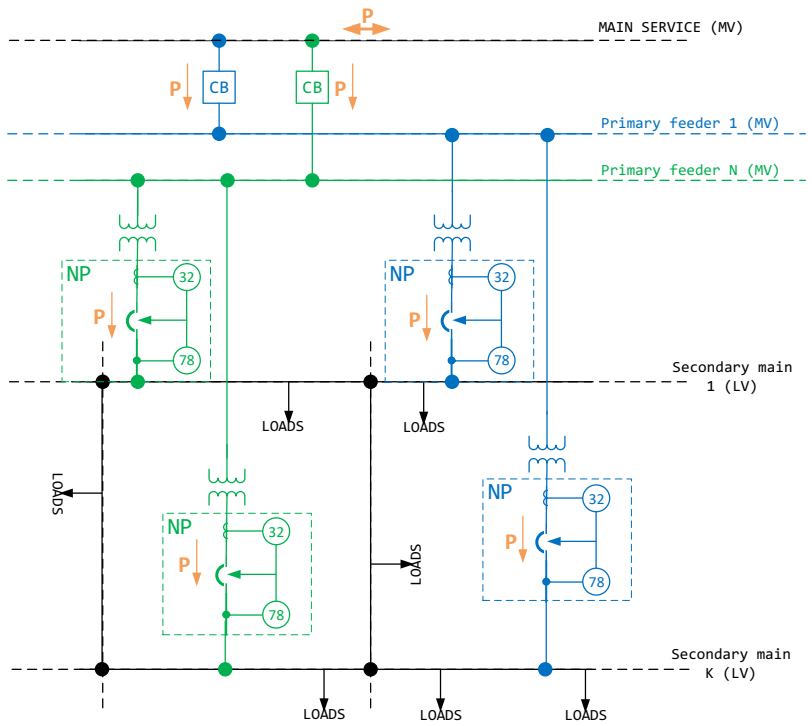

Network Unit (NU) consists of a Network Transformer (NT) and Network Protector (NP)

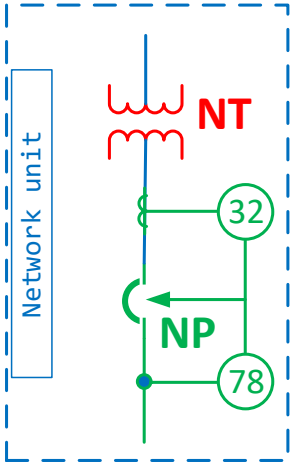

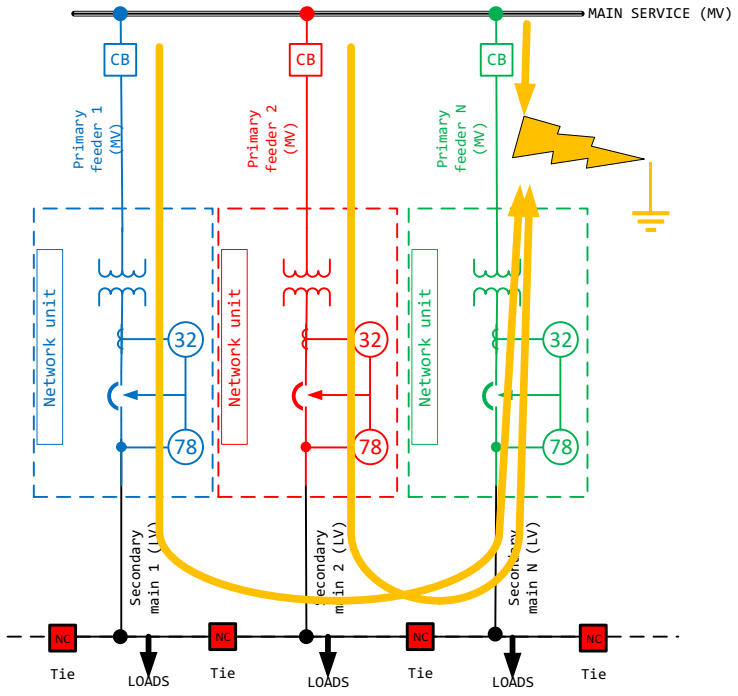

Background - Secondary Network Protection

Network protectors are designed to not allow reverse power flow, which presents challenges for interconnection of DER or microgrids

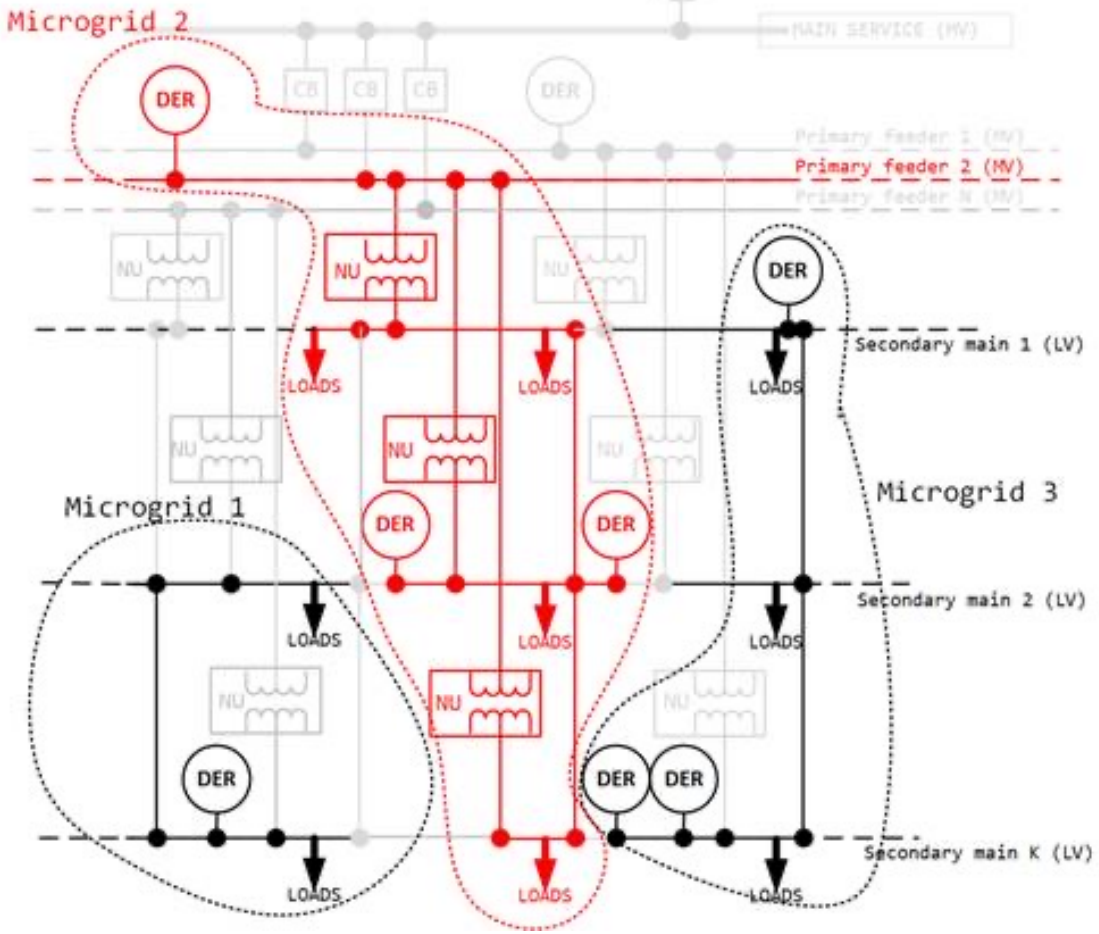

IEEE Power & Energy Magazine
https://ieeexplore.ieee.org/document/9408478

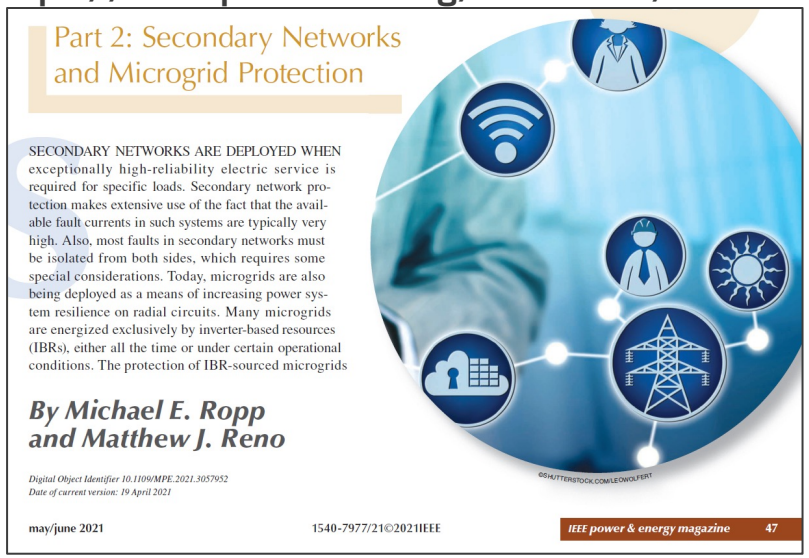

Part 2: Secondary Networks and Microgrid Protection

SECONDARY NETWORKS ARE DEPLOYED WHEN exceptionally high-reliability electric service is required for specific loads. Secondary network protection makes extensive use of the fact that the available fault currents in such systems are typically very high. Also, most faults in secondary networks must be isolated from both sides, which requires some special considerations. Today, microgrids are also being deployed as a means of increasing power system resilience on radial circuits. Many microgrids are energized exclusively by inverter-based resources (IBRs), either all the time or under certain operational conditions. The protection of IBR-sourced microgrids

By Michael E. Ropp and Matthew J. Reno

Digital Object Identifier 10.1109/MPE.2021.3057952
Date of current version: 19 April 2021

©SHUTTERSTOCK.COM/LEONOLFERT

may/june 2021 1540-7977/21©2021IEEE IEEE power & energy magazine 47

Industry Needs and Challenges

Traditional low-voltage networks are designed to only allow for flows from the medium-voltage into the low-voltage system

- Because DER may create reverse power flows, most utilities and IEEE 1547 severely limit their interconnection

Protection challenges have limited the adoption of DER and microgrids in low-voltage networks

- Need solutions to allow equitable integration of clean energy for customers and businesses on low-voltage networks

Low-voltage networks provide high reliability, but they are still vulnerable to transmission outages.

- How can we support a low-voltage network (or portion of it) using local generation in a microgrid even when the transmission is down?

Meshed systems improve system reliability, but protection is a key challenge keeping us from operating meshed low-voltage and distribution systems

Project Objectives and Outcomes

Objective:

- Increase the adoption of microgrids in secondary networks and meshed distribution systems by developing novel protection schemes that allow for safe reliable operation of DER in secondary networks
- These new protection schemes will improve the interconnection of DER and microgrids in low-voltage grid networks, secondary spot networks, and looped or meshed distribution systems at the primary-voltage (medium-voltage)

Outcomes:

- Development and demonstration of candidate methods for enabling protection of secondary networks containing high levels of DER
- Development of modeling and testing tools for protection systems designed for use with secondary networks including DERs
- Development of new industrial partnerships to facilitate widespread results dissemination and eventual commercialization of results as appropriate

Significance and Impact

Innovative

- Developing new modeling and new protection schemes for increased adoption of DER and microgrids in urban areas
- Combining algorithm development with experimental and hardware-in-the-loop testing

Transformative

- Serving high-density load areas, and in support of electric utility industry trends and upcoming needs.
- Increasing grid hosting of clean energy
- Increasing resilience with microgrids and backup generation during extreme weather events

Impactful

- Working with the IEEE Power System Relaying Committee (PSRC) to provide expertise and impact to standards and guides for microgrid and low-voltage network protection
- Developing and testing protection schemes to work with existing low-voltage networks and network protector vendors
- Enabling future deployment of microgrids to improve reliability, resilience, and security

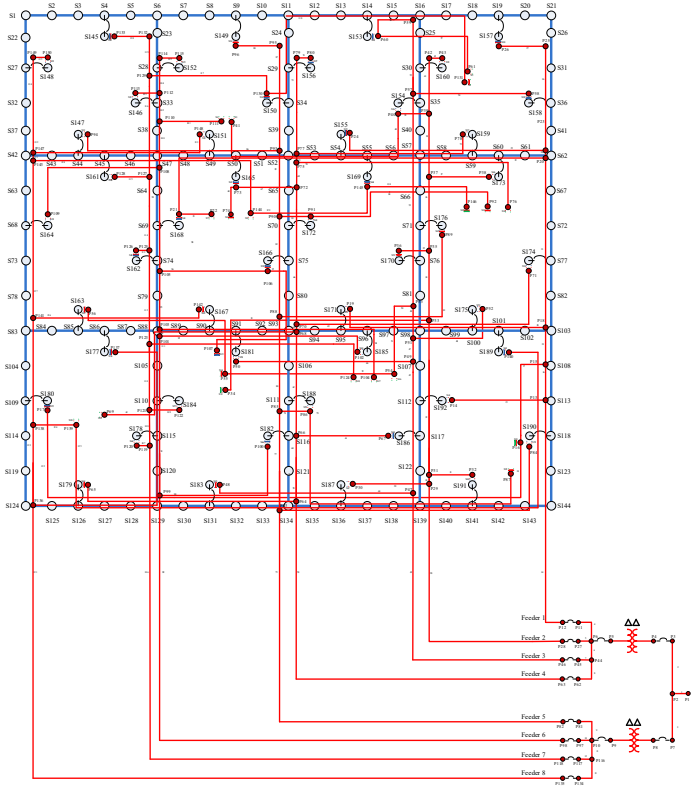

Technical Approach

Tasks:

- Create dynamic EMT model of IEEE 342-node low-voltage network test system
- Framework and example cases of DER and microgrid integration in low-voltage network systems
- Develop new protection schemes to replace conventional network protector reverse current algorithms
- Test new protection schemes in hardware-in-the-loop
- Work with IEEE for standards development

Due Date	Milestone Description
12/31/21	Secondary network system data in hand; Participation in appropriate standards meetings; Procedure for HIL testing/experimentation on secondary network systems
03/31/22	MATLAB/Simulink secondary grid network and secondary spot network models, with validation test results; specification of NP
06/30/22	Initial simulation results on a candidate method for replacing reverse power relaying
09/30/22	Opal RT-ready versions of the secondary grid simulation models; Simulation results and discussion for a candidate method for replacing reverse power relaying

Secondary Network Protection – Scoping Study

Published a scoping study investigating the challenges and R&D opportunities for protection of secondary networks

- Impact of DER and microgrids
- New secondary network protection schemes
- Communication requirements
- New monitoring and protective equipment
- New analysis and design software
- Secondary network protection standards

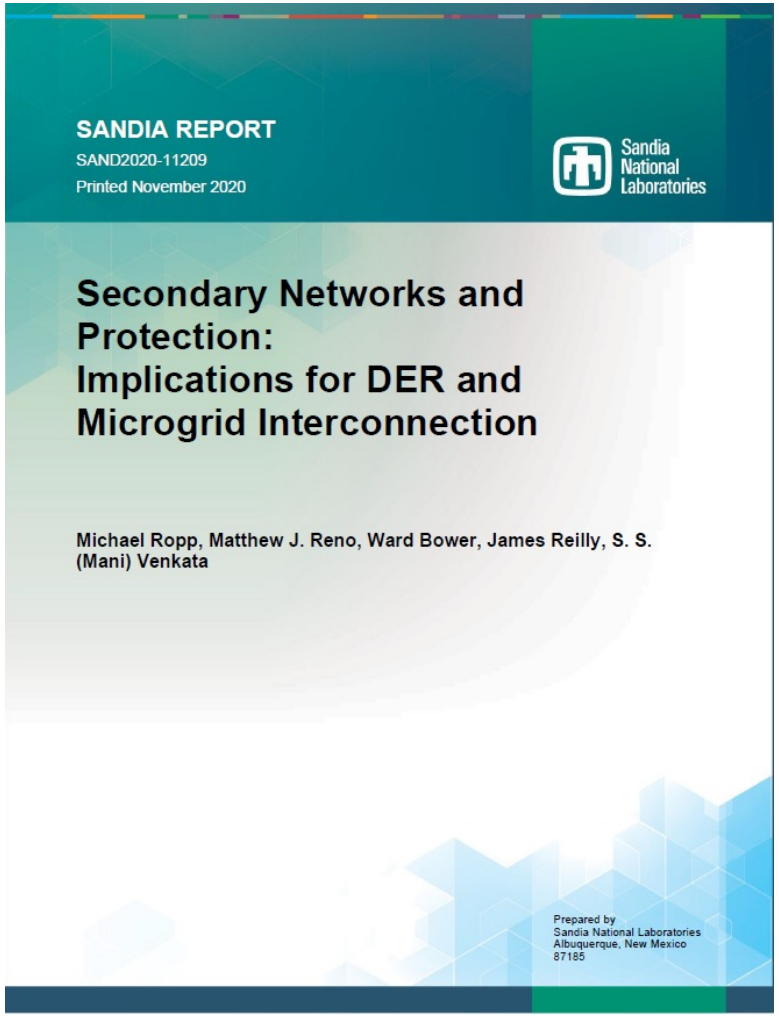
SANDIA REPORT
SAND2020-11209
Printed November 2020

Sandia National Laboratories

Secondary Networks and Protection: Implications for DER and Microgrid Interconnection

Michael Ropp, Matthew J. Reno, Ward Bower, James Reilly, S. S. (Mani) Venkata

Prepared by
Sandia National Laboratories
Albuquerque, New Mexico
87185

M. Ropp, M. J. Reno, W. Bower, J. Reilly, S. S. Venkata "Secondary Networks and Protection: Implications for DER and Microgrid Interconnection," Sandia National Laboratories, SAND2020-11209, 2020

Low-Voltage Network Protection R&D Roadmap

Worked with Quanta Technologies to investigate opportunities for technical exploration around secondary network protection

Conducted interviews with PHI PEPCO, Oncor, and ConEd to assess experience with low-voltage (LV) distribution network equipment and systems including network protectors (NPs), network relays, and protection coverage.

Present a range of design ideas for improvements and additions to network protectors, instrument transformers, fault-clearing methods, electrical fault-sensing methods, communications, condition monitoring, and modeling.

Prioritize the list of recommended research and development topics

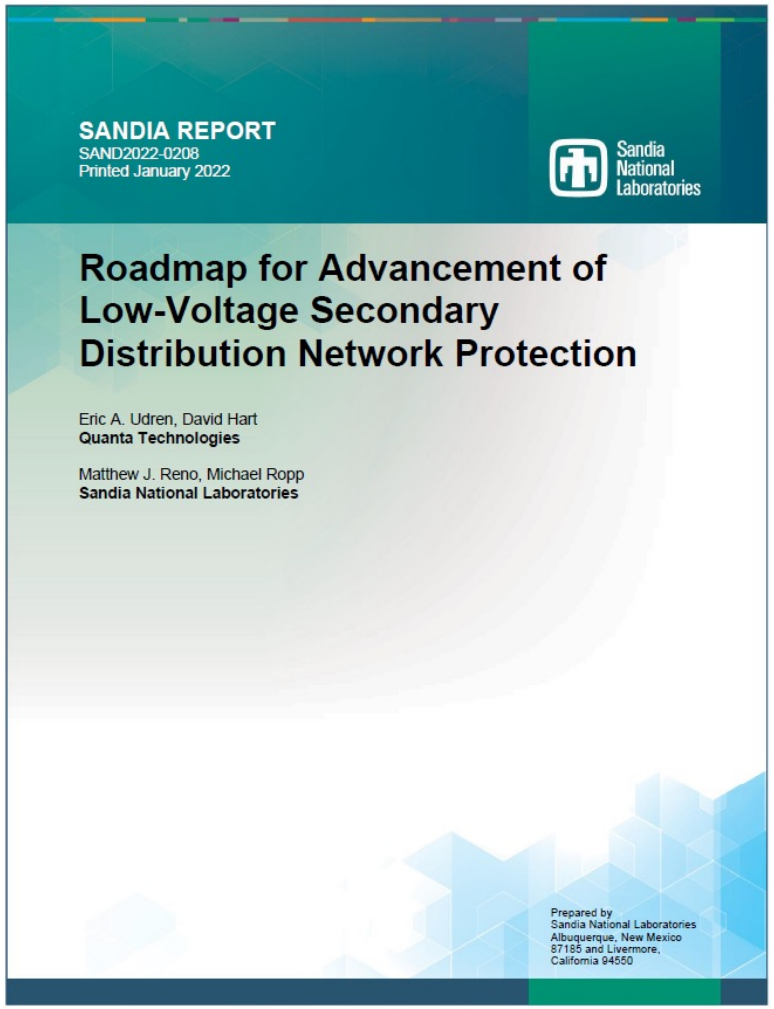
SANDIA REPORT
SAND2022-0208
Printed January 2022

Sandia National Laboratories

Roadmap for Advancement of Low-Voltage Secondary Distribution Network Protection

Eric A. Udren, David Hart
Quanta Technologies

Matthew J. Reno, Michael Ropp
Sandia National Laboratories

Prepared by
Sandia National Laboratories
Albuquerque, New Mexico
87185 and Livermore,
California 94550

Industry Workshop

On 8/19/21, Sandia and Quanta Technologies held a virtual half-day workshop on “Protection, Control, and Modeling of Low-Voltage Networks” with ComEd, ConEd, Oncor, PEPCO/PHI, and BGE.

Surveyed current low voltage network protection situations, challenges, and future testing needs

Identified four current low voltage network challenges:

- Protection in distributed energy resources (DER) Penetrated Low Voltage Network
- Voltage Profile Management in Low Voltage Network
- Low Voltage Network Fault Location and Fast Clearing
- Microgrid protection challenges

Summary report of the workshop

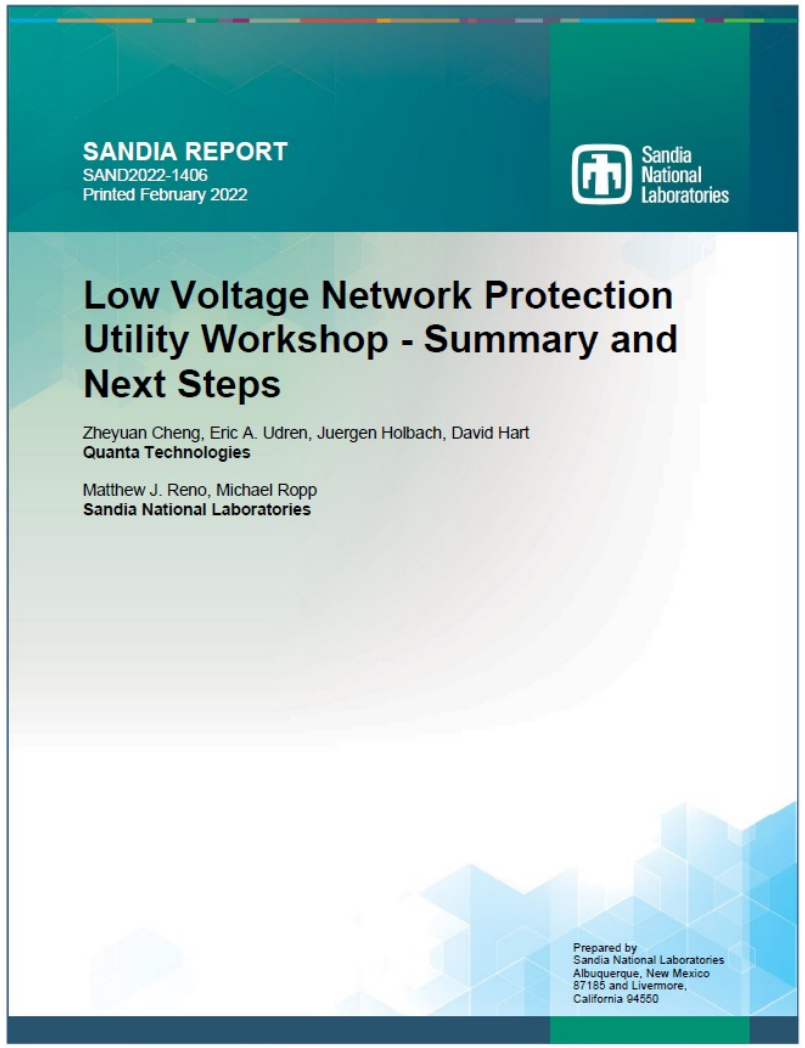
SANDIA REPORT
SAND2022-1406
Printed February 2022

Sandia National Laboratories

Low Voltage Network Protection Utility Workshop - Summary and Next Steps

Zheyuan Cheng, Eric A. Udren, Juergen Holbach, David Hart
Quanta Technologies

Matthew J. Reno, Michael Ropp
Sandia National Laboratories

Prepared by
Sandia National Laboratories
Albuquerque, New Mexico
87185 and Livermore,
California 94550

Use Cases

Objective is to design protection schemes that will work for the two use cases:

Low-Voltage Network with DER

- Protection philosophy does not change with sufficient fault current provided by synchronous generators connected to the main service.
- Low load situation may export load and operate NP based on reverse power flow (32).

Low-Voltage Network with Microgrids

- Microgrid mode transitions are challenging, and protection inside the microgrid in off-grid mode with low fault currents may be severely limited.
- The main source of the microgrid may be on the main service. This does not have the bidirectional power flows of DER in the LV network, but low fault current in microgrid mode inhibits operation of conventional protection

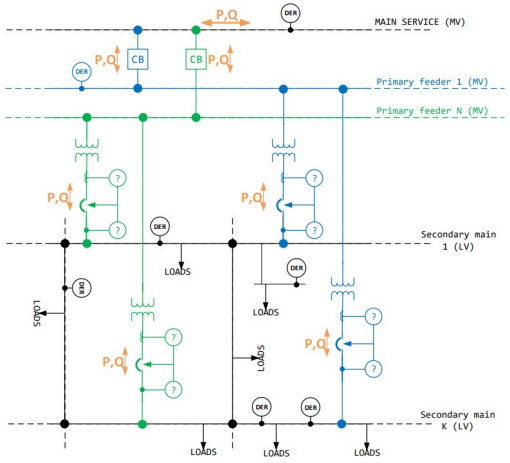

Figure 6. Secondary grid network with N primary feeders and K secondary mains, with DER. Directions of active power flow (P) are marked.

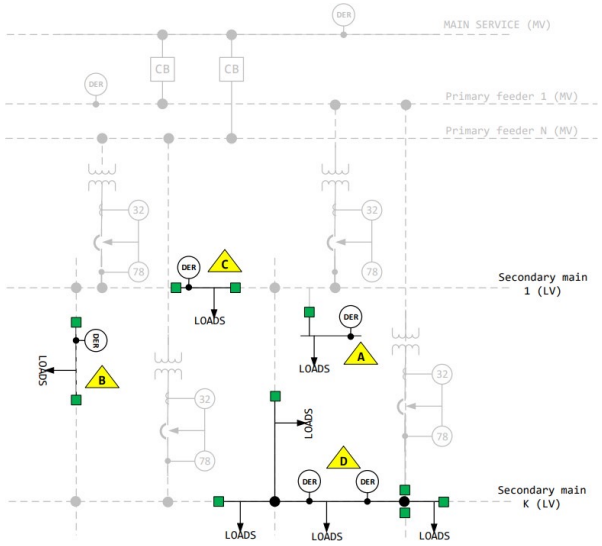

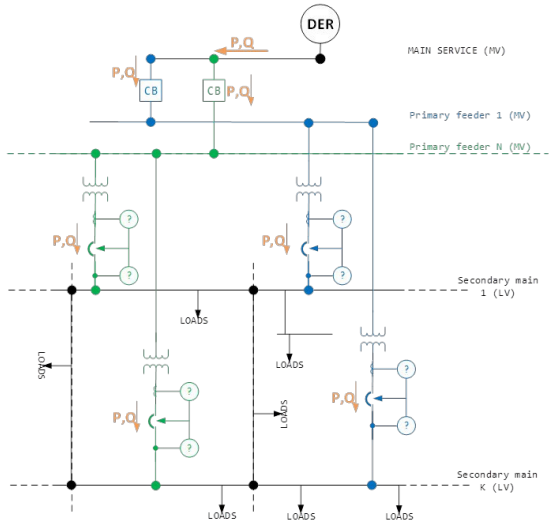

IEEE 342-node Low-Voltage Network Test System (LVNTS)

IEEE 342-node LVNTS model exists in GridLAB-D, OpenDSS, and CYME models

- Identified some model errors that caused discrepancies in fault currents between different models – source impedance, transformer ratings, line impedances, connections, etc.

Developed 342-node LVNTS model in MATLAB/Simulink and RTDS

- Dynamic EMT simulations, microgrid simulations with grid-forming inverters, and HIL testing

For real-time, reduced the IEEE 342-node

- Reduced model validated for short circuit currents with the full OpenDSS model

IEEE 342 node colored by 3-phase short circuit fault current at each location

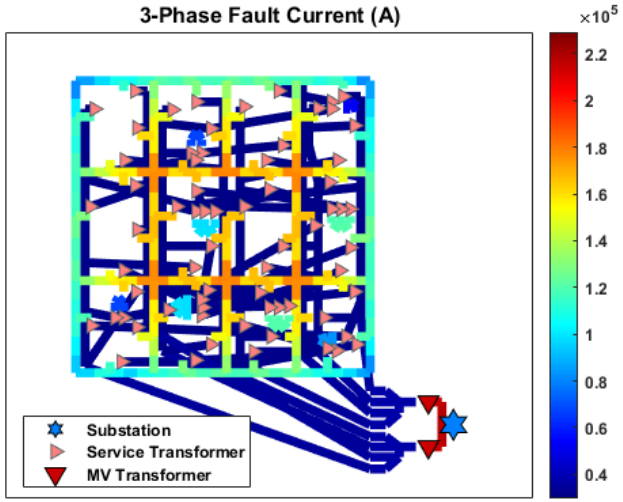

OpenDSS LVNTS Model

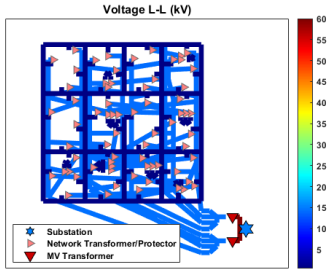

CYME LVNTS model

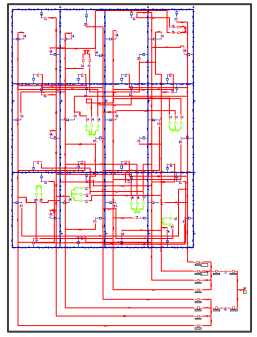

Reduced LVNTS Model in RTDS

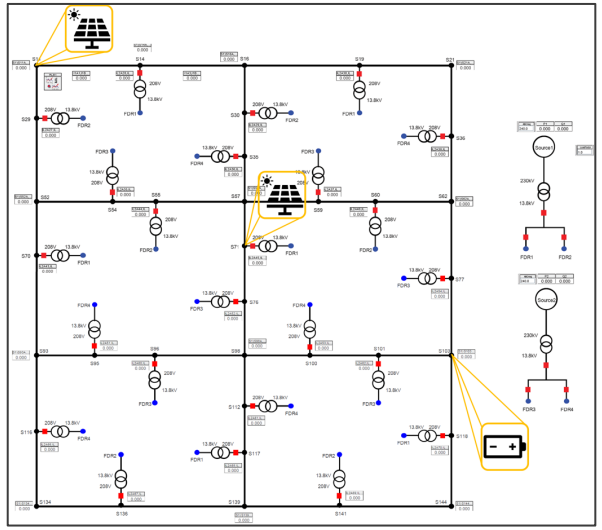

MATLAB/Simulink LVNTS model

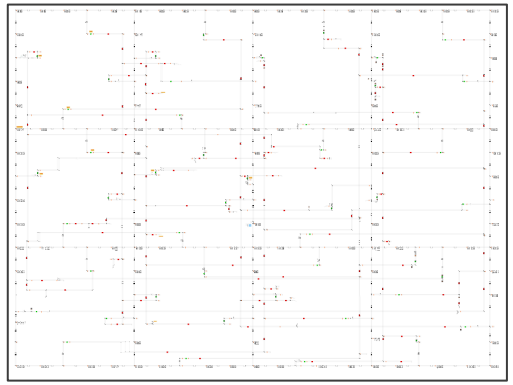

Comparison of Short Circuit Currents at Each Bus to Validate Models

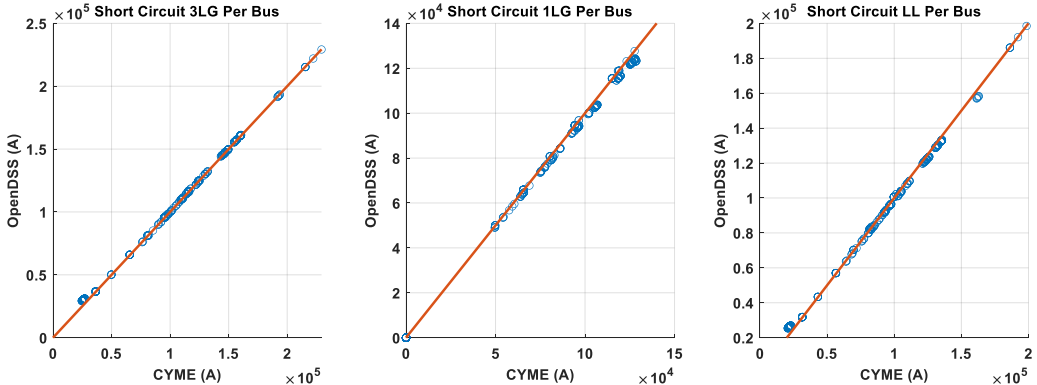

Existing Network Protector Trip Logic

Reverse Trip

- Time delay mode: trip when reverse current exceeds 5% for more than 10 sec.
- Instantaneous overcurrent trip when reverse current exceeds 10%.

Trip level (600A):

$$I_1 \cos\phi < -5\% \times I_{\text{rated}}$$

The magnitude and direction of the current must exist for at least 2 cycles to initiate trip operation

The trip contacts shall open within 5 cycles of reverse current detection.

Watt-Var option rotates the trip region by 60 degrees to initiate the trip when the reverse current becomes highly lagging.

Reverse trip with Watt-Var enabled

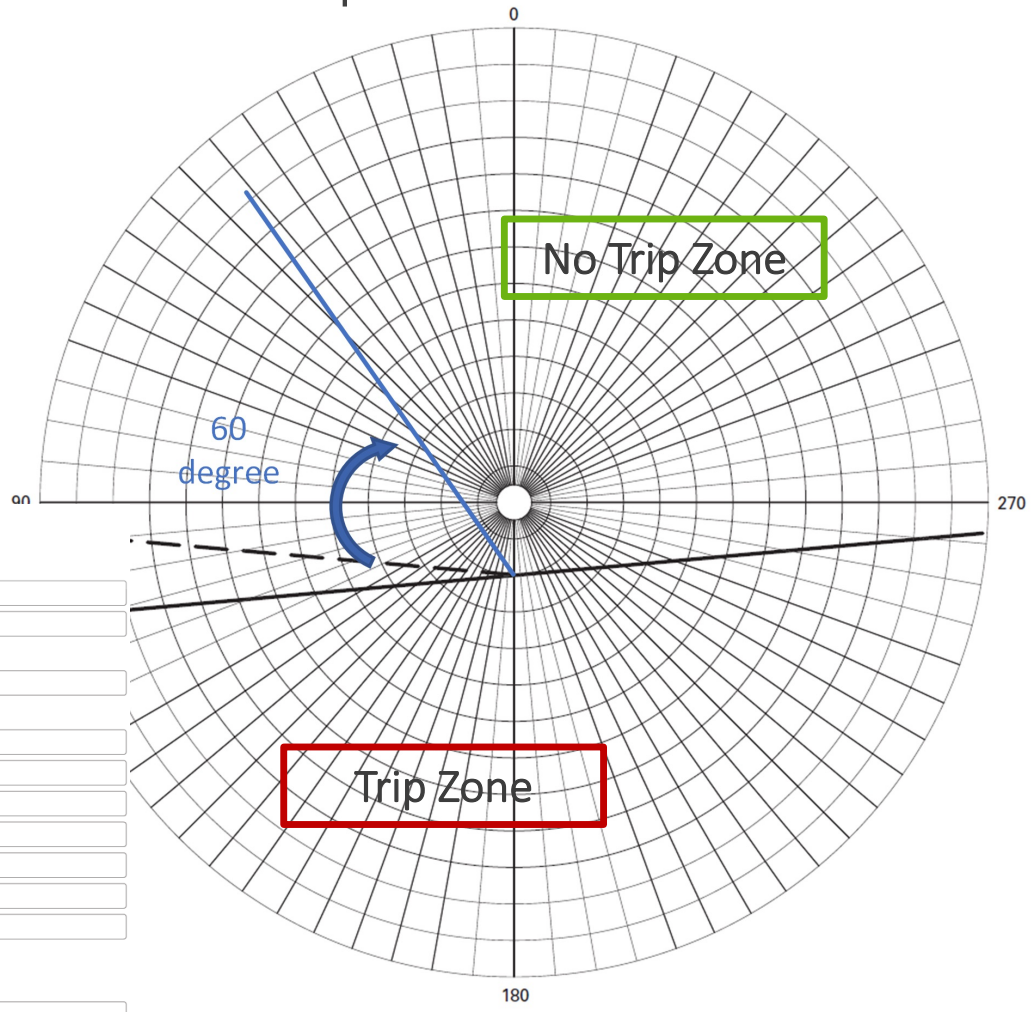

Address:001
Configure Setpoints:
Reread Device Setpoints

Frequency: [Hz]	60
System Voltage: [Volts]	216
Phase Sequence (CBA):	☐
CT Ratio:	800
Straight Line Master Line:	☐
Master Line: [Volts]	0.5
Phasing Line: [Degrees]	-5
Phasing Line 1: [Degrees]	-5
Lefthand Master Line: [Degrees]	90
Reverse Trip: [%]	5
Time Delay: [Seconds]	10
Overcurrent: [%]	10
Watt-Var Enable:	☑
Pump Enable:	☑
Pump Cycles:	3
Pump Time: [Seconds]	60
Pump Lockout Reset Delay: [Min.]	60

Existing Network Protector Reclose Logic

Close region

Permit a close when the phasing voltage is in the circular close region

Operating quantity: phasing voltage

- $V_{1P}\angle\delta = V_{1X}\angle\phi - V_{1N}\angle\theta$

Any close conditions must exist for 500 ms before the close contact will close.

If the network side is de-energized, and the transformer side is energized, the contact will close, if V1N is less than 0.1 P.U., V2N is less than 0.06 P.U., and V1P exceeds 0.8 P.U.

- Dead network: V1N is equal to or less than 7 Volts

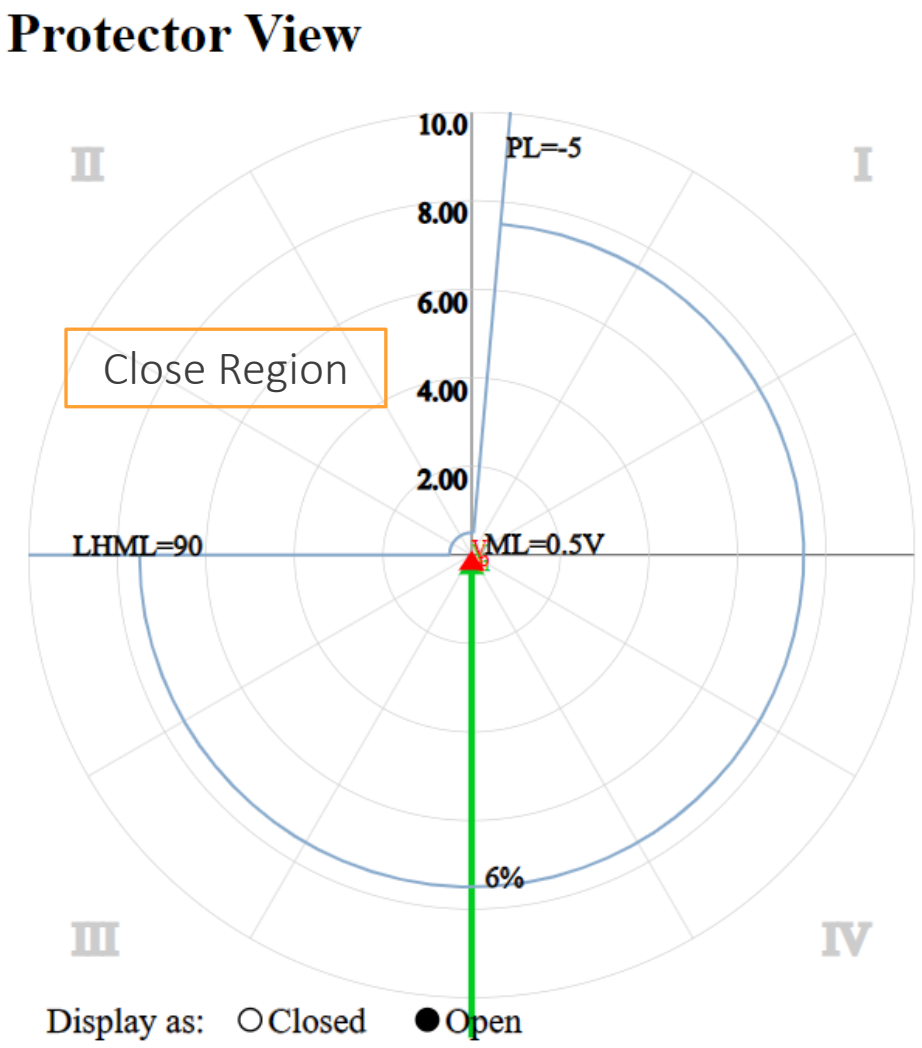

Simulations with DER (Issues with Existing Protection)

Simulation of PV farm connected to bus S11. Ramp up solar generation from 0 to 3 MW

As solar generation increased, two nearby network protectors observe reverse power and tripped

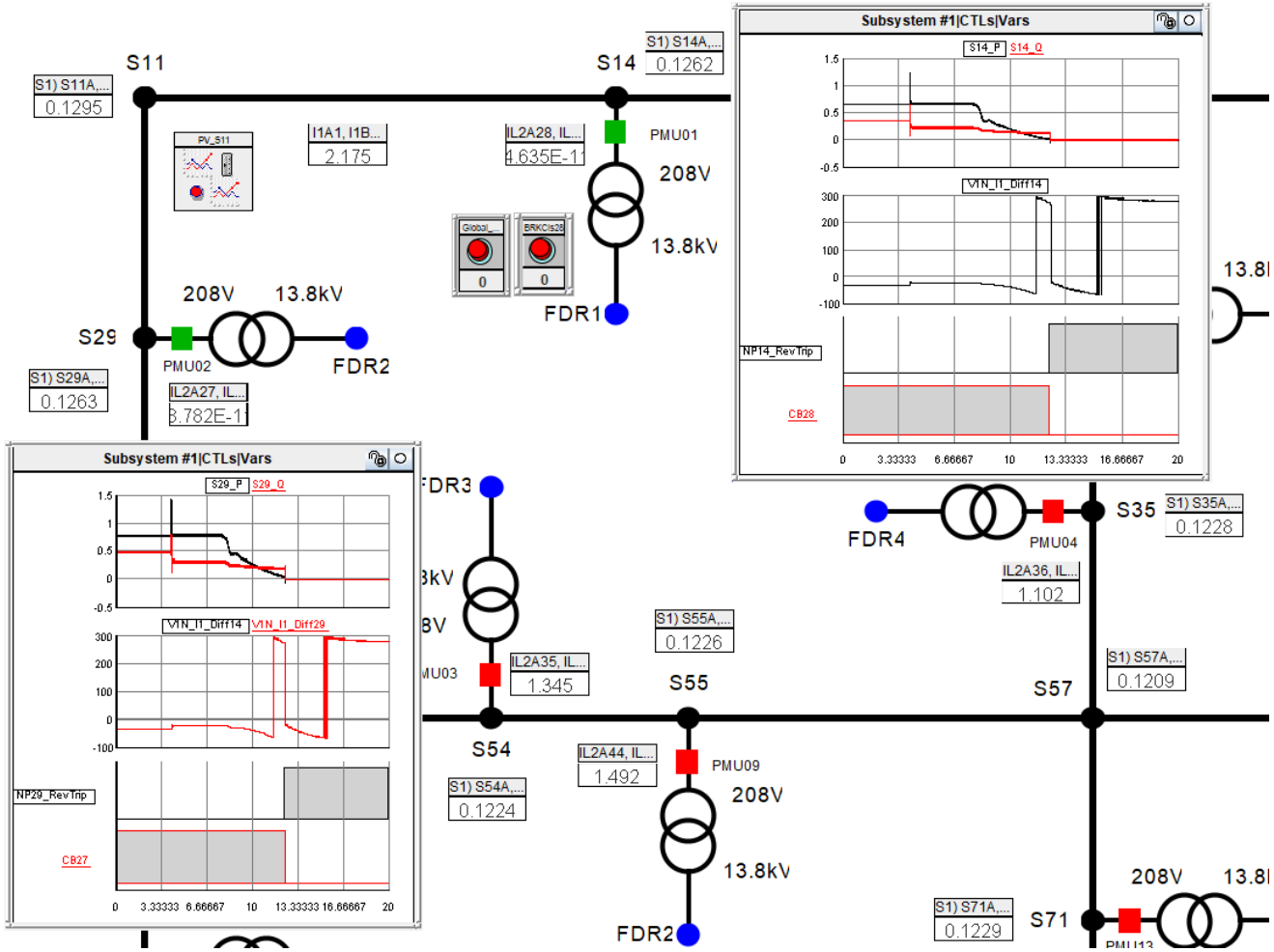

Development and Testing of New Protection Schemes

Presently studying two new protection techniques for this application.

Rate of change of reverse power (dP/dt)

- Detects a large negative dP/dt when the baseline power flow was already negative.

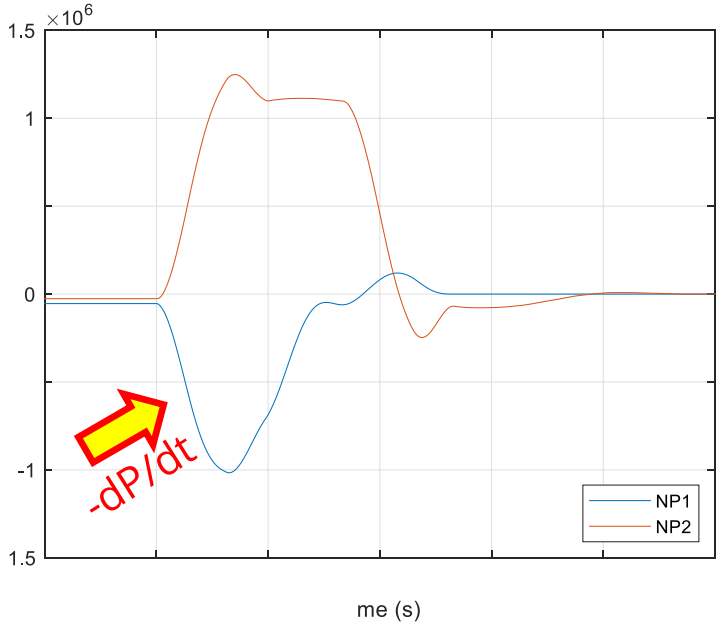

Undervoltage-supervised overcurrent (UVOC)

- Looks for a reverse overcurrent occurring simultaneously with an undervoltage.

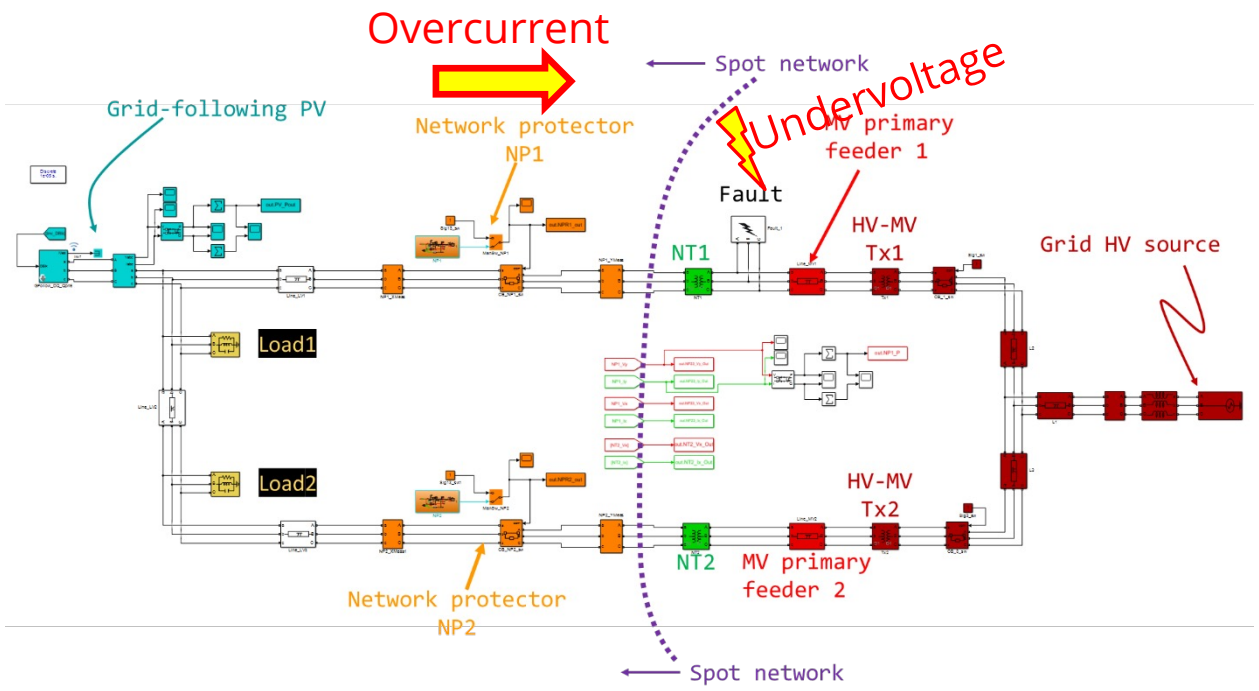

Development and Testing of New Protection Schemes

Challenges with dP/dt

- May falsely trigger if a large load shuts off or trips during export (e.g., elevator reaches its destination)
- Needs logic to avoid tripping additional NPs when the NP nearest to the fault trips

Challenges with UVOC

- Will require a directional element if the electrical distance between NPs is too small
- Testing on UVOC is still in a very early stage; additional challenges will almost certainly be identified

HIL Testing of Low-Voltage Network Protection

Hardware-in-loop (HIL) testing of network protectors and relays in operating and fault scenarios

Developed RTDS and Opal-RT models of LV network equipment and surrounding system topologies for ongoing performance evaluations.

Created a generic low voltage network model in RTDS

- Type: Secondary grid network
- With 1 main MV feeder and multiple MW primary feeders
- With multiples LV secondary mains
- With multiple network protectors (NPs)

Procured 2 physical NPs with relays from vendors or utilities

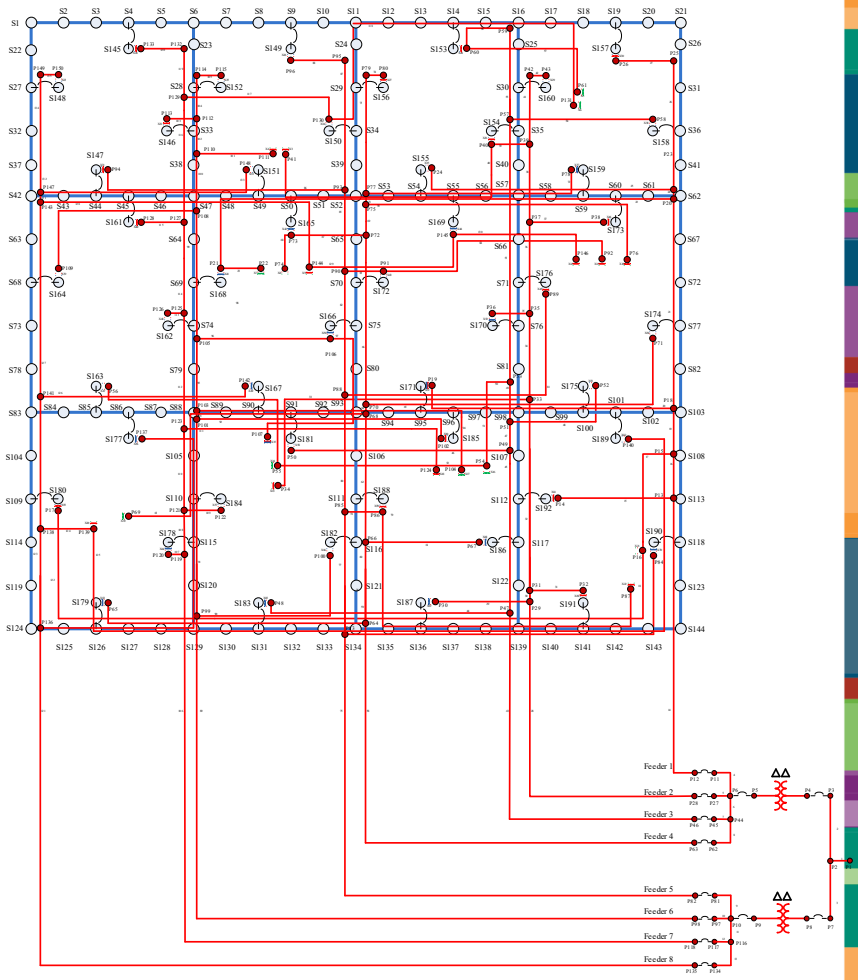

Network Relay Model Development and Hardware Characterization

Network relay model development

Simulink model of an NPR that includes:

- Instantaneous overcurrent (50)
- Time-definite overcurrent (50TD)
- Inverse-time overcurrent (51)
- Reverse power (78; two separate implementations)
- dP/dt (7P)
- UVOC (27+50)
- Sync check (25) + timed reclosure

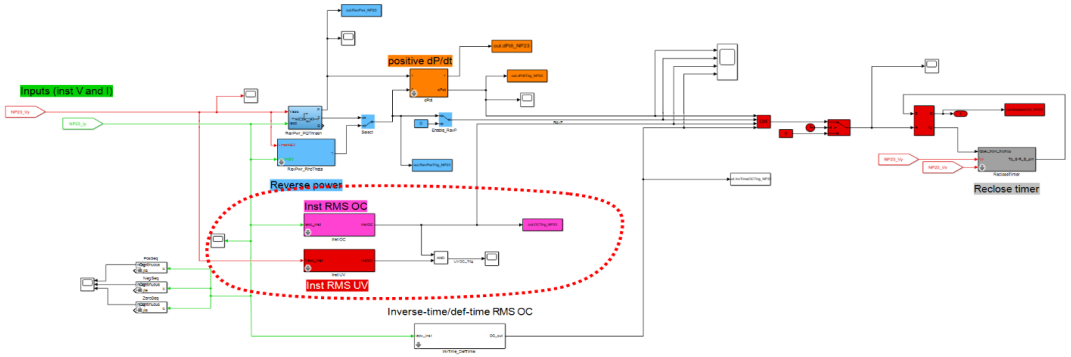

HIL characterization

Eaton MPCV integrated with RTDS.

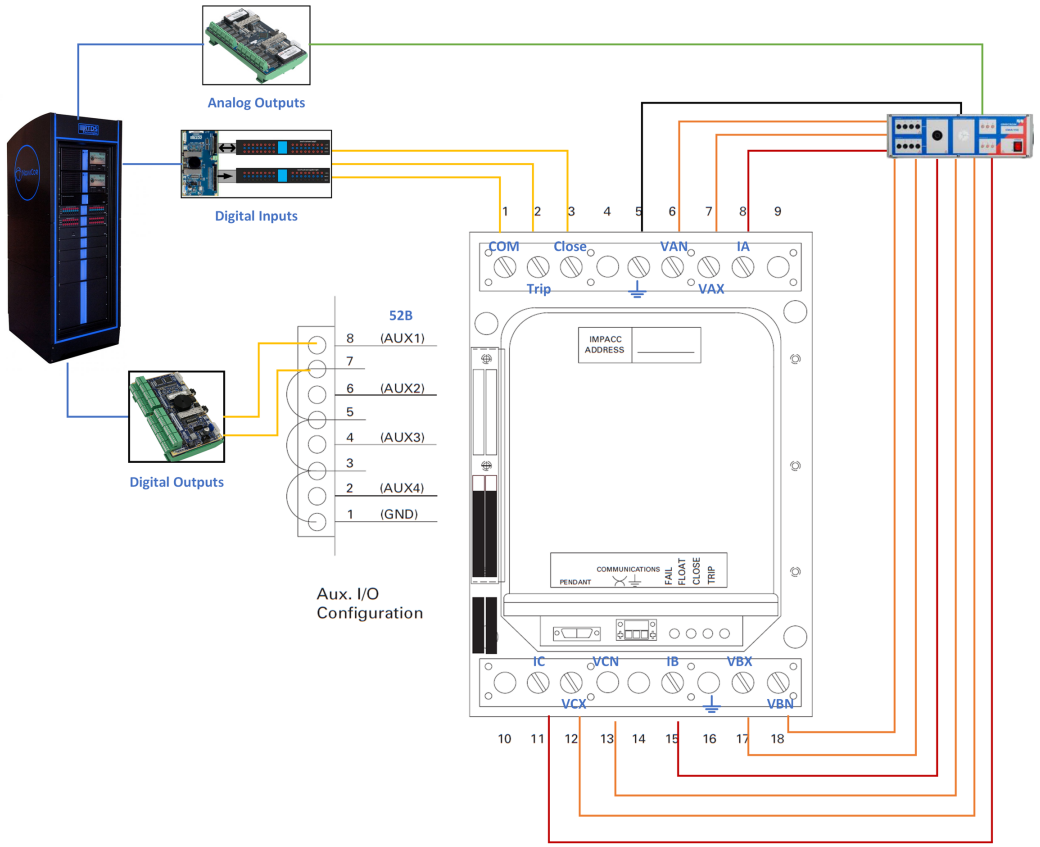

Network Relay HIL Testing

Trip Test (Watt-Var enabled with instantaneous and 10-sec delay trips)

Each dot is another test with different current magnitudes and angles. If the breaker opens, trip time is shown in milliseconds

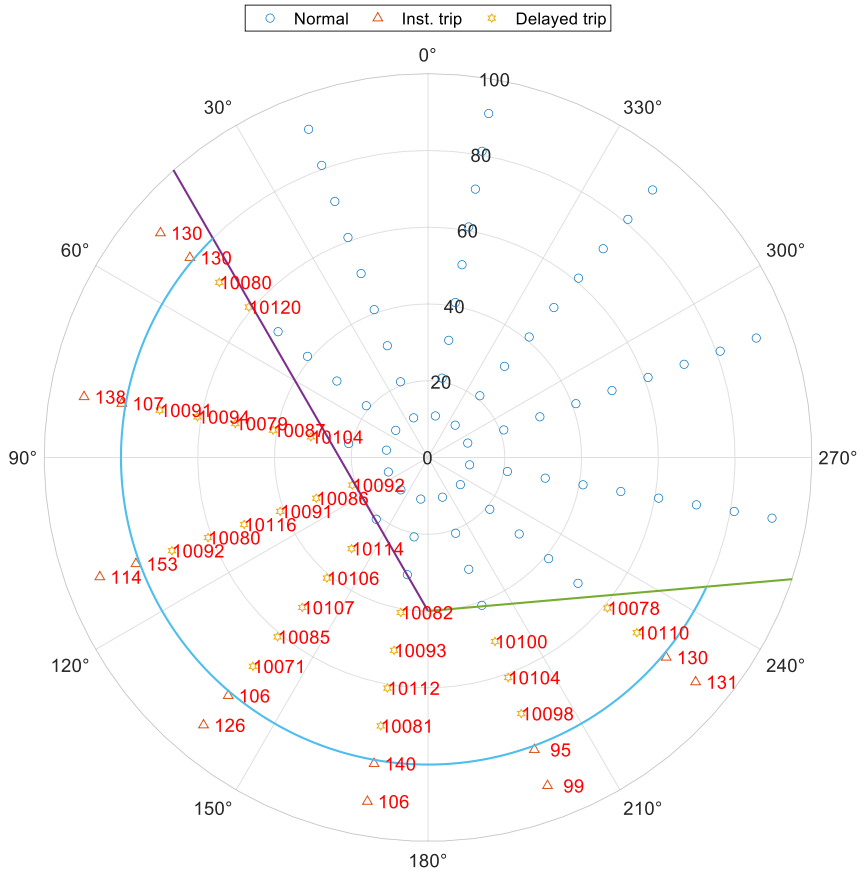

Auto Reclose Probing Test

If breaker recloses, time shown in milliseconds

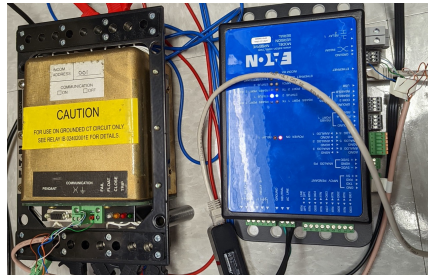

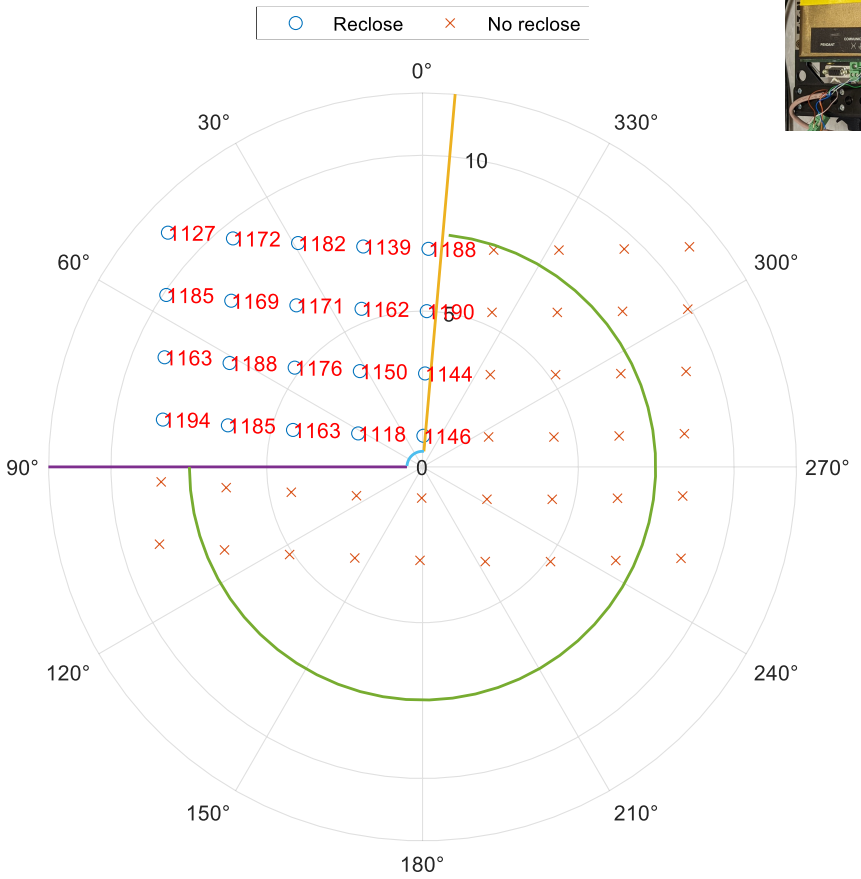

Project Collaborations and Technology Transfer

Involvement in the **IEEE Power System Relaying Committee (PSRC)** to provide expertise and impact to standards and guides for microgrid protection

- IEEE 2030.12 “Guide for the Design of Microgrid Protection Systems” – Currently out for ballot, votes and comments due July 27
- PSRC WG C45 “Protection and short-circuit modeling of system with high penetrations of inverter-based resources”

Working with **industry experts** (Quanta Technology, EPRI), **utilities** with low-voltage networks (ConEd, Oncor, ComEd, Pepco, BGE, National Grid, PNM, El Paso Electric, Madison Gas & Electric, Indianapolis Power & Light, CenterPoint Energy, EnMax Alberta), and **network protector manufacturers** (Eaton, ETI Richards)

- Utilities participated in workshops and review of R&D roadmap. Individual interviews with 5 different utilities about their current LV network procedures, protection, and challenges
- Received low-voltage network data from Oncor and ComEd
- NDA’s with network protector manufacturers for HIL testing and details about existing algorithms

Outreach

Publications

- M. E. Ropp and M. J. Reno, “Influence of Inverter-Based Resources on Microgrid Protection: Part 2: Secondary Networks and Microgrid Protection,” IEEE Power and Energy Magazine, 2021.
- Z. Cheng, E. A. Udren, J. Holbach, D. Hart, M. Ropp, and M. J. Reno, “Low Voltage Network Protection Utility Workshop - Summary and Next Steps”, Sandia National Laboratories, SAND2022-1406, 2022.
- E. A. Udren, D. Hart, M. J. Reno, and M. Ropp, “Roadmap for Advancement of Low-Voltage Secondary Distribution Network Protection”, Sandia National Laboratories, SAND2022-0208, 2022.
- M. Ropp, M. J. Reno, W. Bower, J. Reilly, S. S. Venkata “Secondary Networks and Protection: Implications for DER and Microgrid Interconnection,” Sandia National Laboratories, SAND2020-11209, 2020
- 17 other publications related to microgrid protection in 2022, and 15 in 2021

Workshops

- Sandia and Quanta Technology held a half-day workshop on 8/19/21 on “Protection, Control, and Modeling of Low-Voltage Networks” with ComEd, ConEd, Oncor, Pepco, and BGE.
- Sandia and EPRI hosted a workshop on 11/4/21 to improve DER connections in low-voltage network with participants from ConEd, EnMax Alberta, and CenterPoint Energy.

Submitted a panel presentation to DistribuTech titled “Protection and Control Challenges of Low Voltage Networks with High Distributed Energy Resources Penetration” for February 7-9, 2023. The proposed panel participants would include presentations from Sandia, Quanta, EPRI, and ConEd.

Conclusions

- New protection schemes are necessary to include DER and microgrids inside networked systems
  - Two new protection schemes have been proposed that do not require communication or major infrastructure upgrades
- Critical infrastructure (hospitals, defense facilities, etc.) are often located inside meshed low-voltage systems for improved reliability. Each facility may include its own local backup generator or UPS
  - Due to interconnection standards, locating clean energy in meshed systems is limited because they cannot export during normal operations
  - Decades of microgrid research has shown that reliability, resilience, and cost can be improved by using microgrids instead of individual facility backups – This requires new protection!
- We are working with industry and standards organizations to develop dependable protection systems validated with HIL

Questions?

Matthew J. Reno, mjreno@sandia.gov