NREL
NATIONAL RENEWABLE ENERGY LABORATORY

Nonlinear Oscillators and Self-organizing Power Electronics Systems

Brian Johnson, Ph.D.

January 27th, 2016

NREL is a national laboratory of the U.S. Department of Energy, Office of Energy Efficiency and Renewable Energy, operated by the Alliance for Sustainable Energy, LLC.

Collaborators

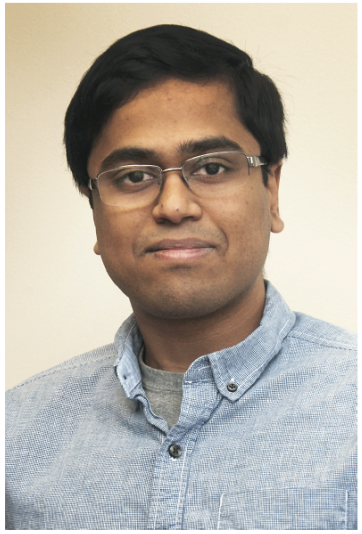

Sairaj Dhople

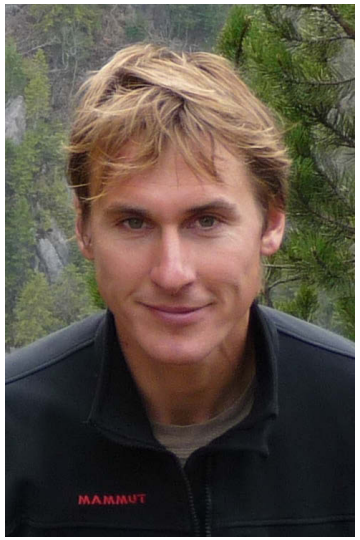

Florian Dörfler

Nathan Ainsworth

Conventional Power Systems

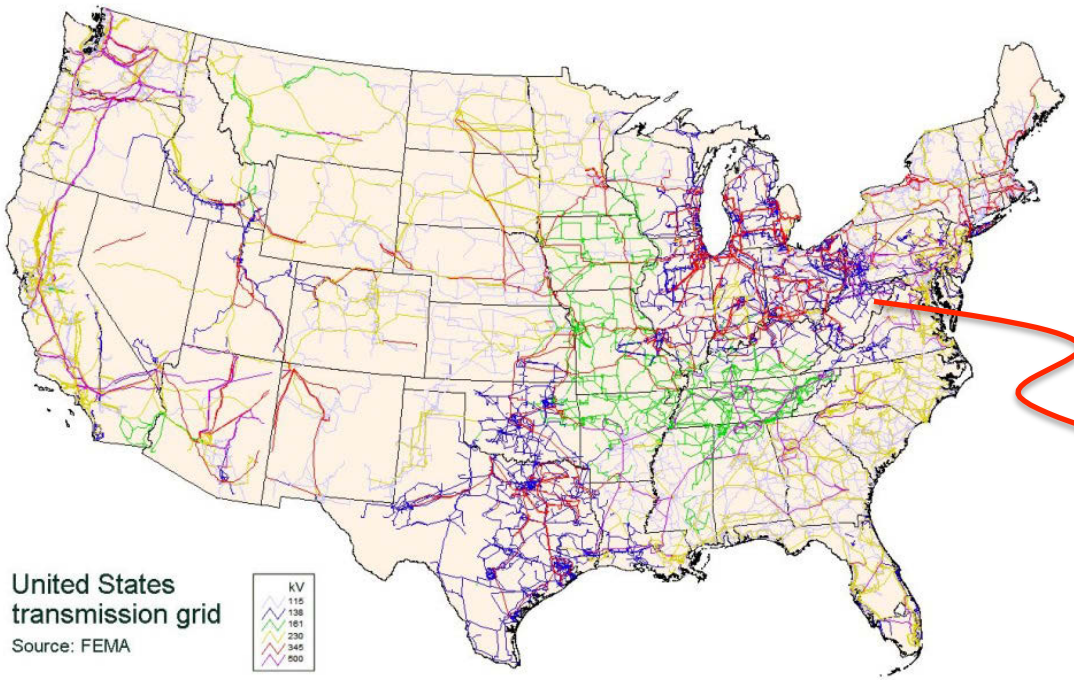

~68% energy from fossil fuels in 2012

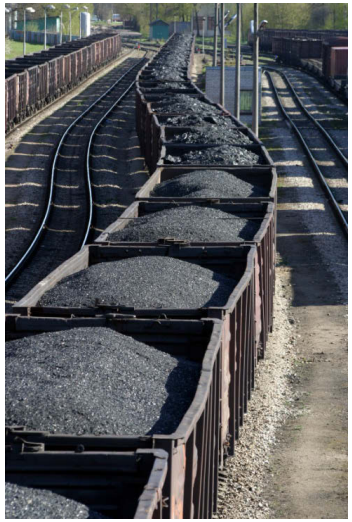

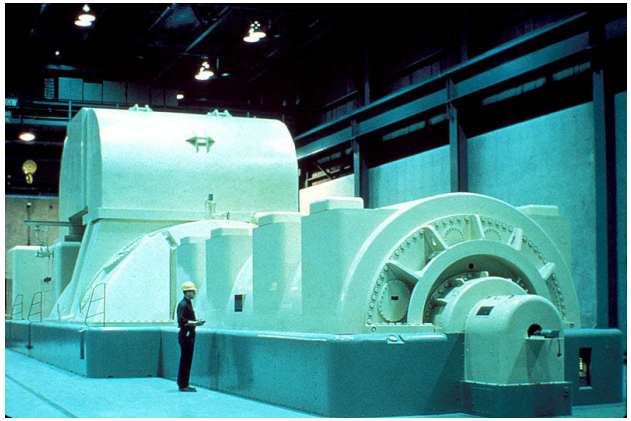

Targets and renewable portfolio standards

- 40% electricity from renewables by 2030 (Hawaii)
- 632 GW of PV by 2050 (DOE SunShot Initiative)
- 1.5 Million EVs in California by 2025 (ca.gov)

The New Interface

Scaling

Location

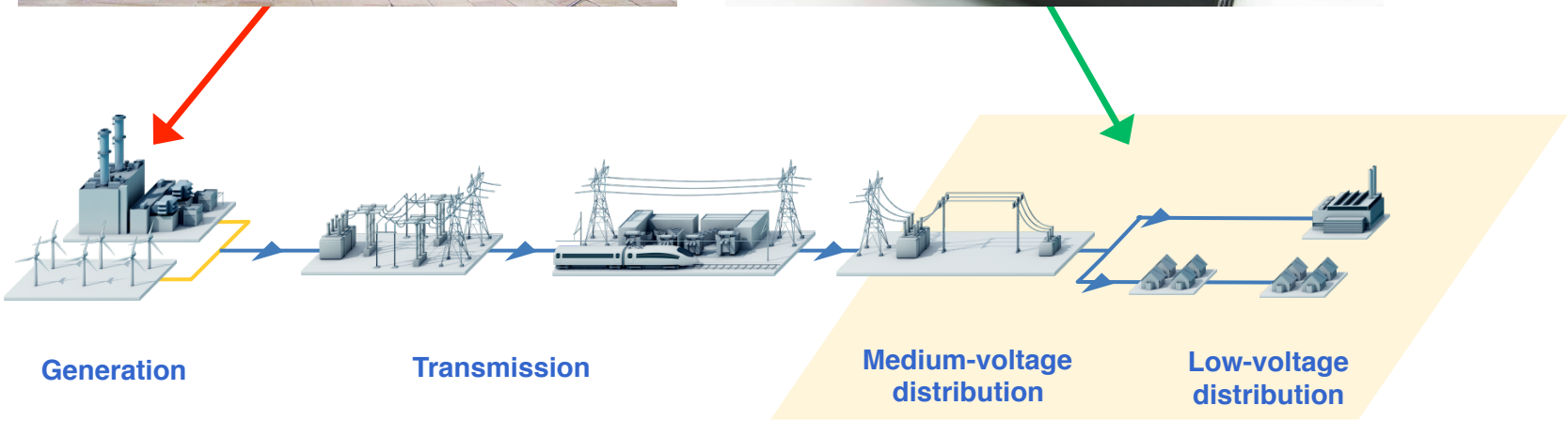
Generation
Transmission
Medium-voltage distribution
Low-voltage distribution

Power System Architecture

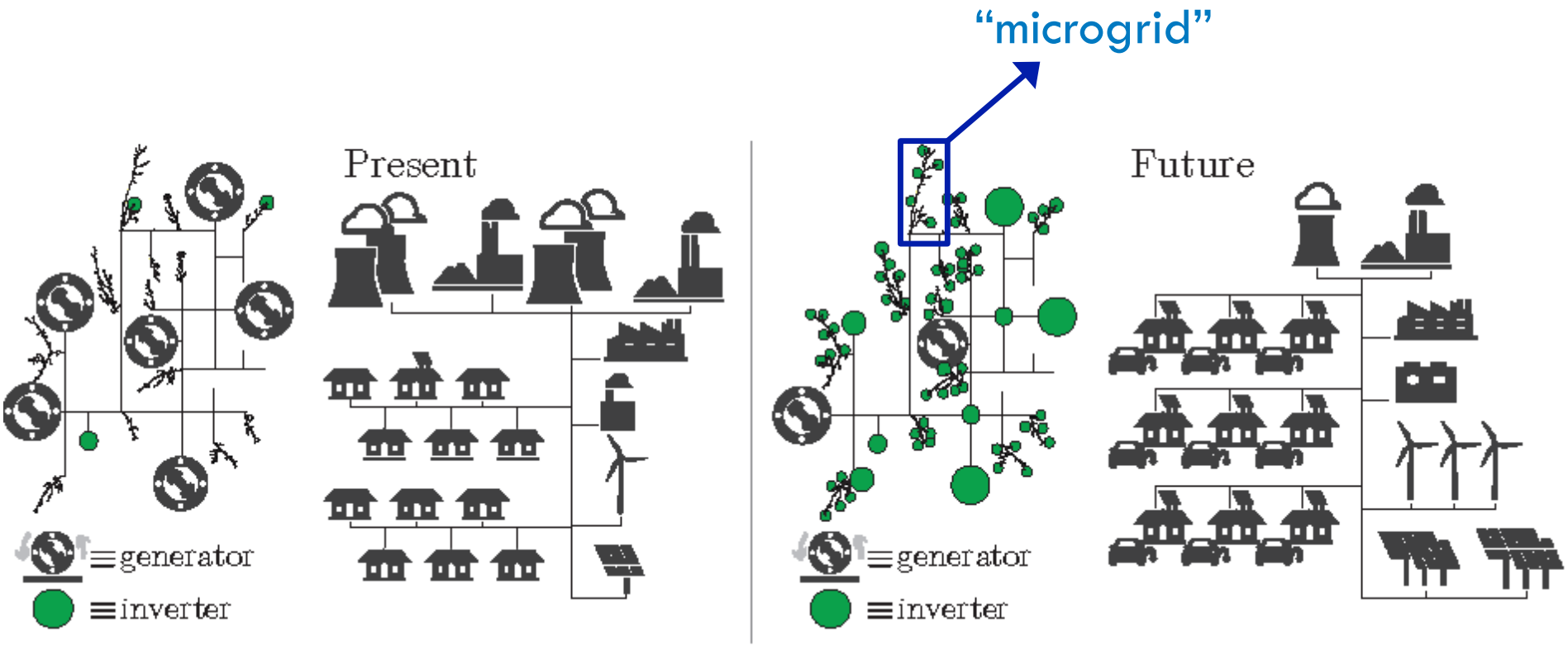

Our Building Block

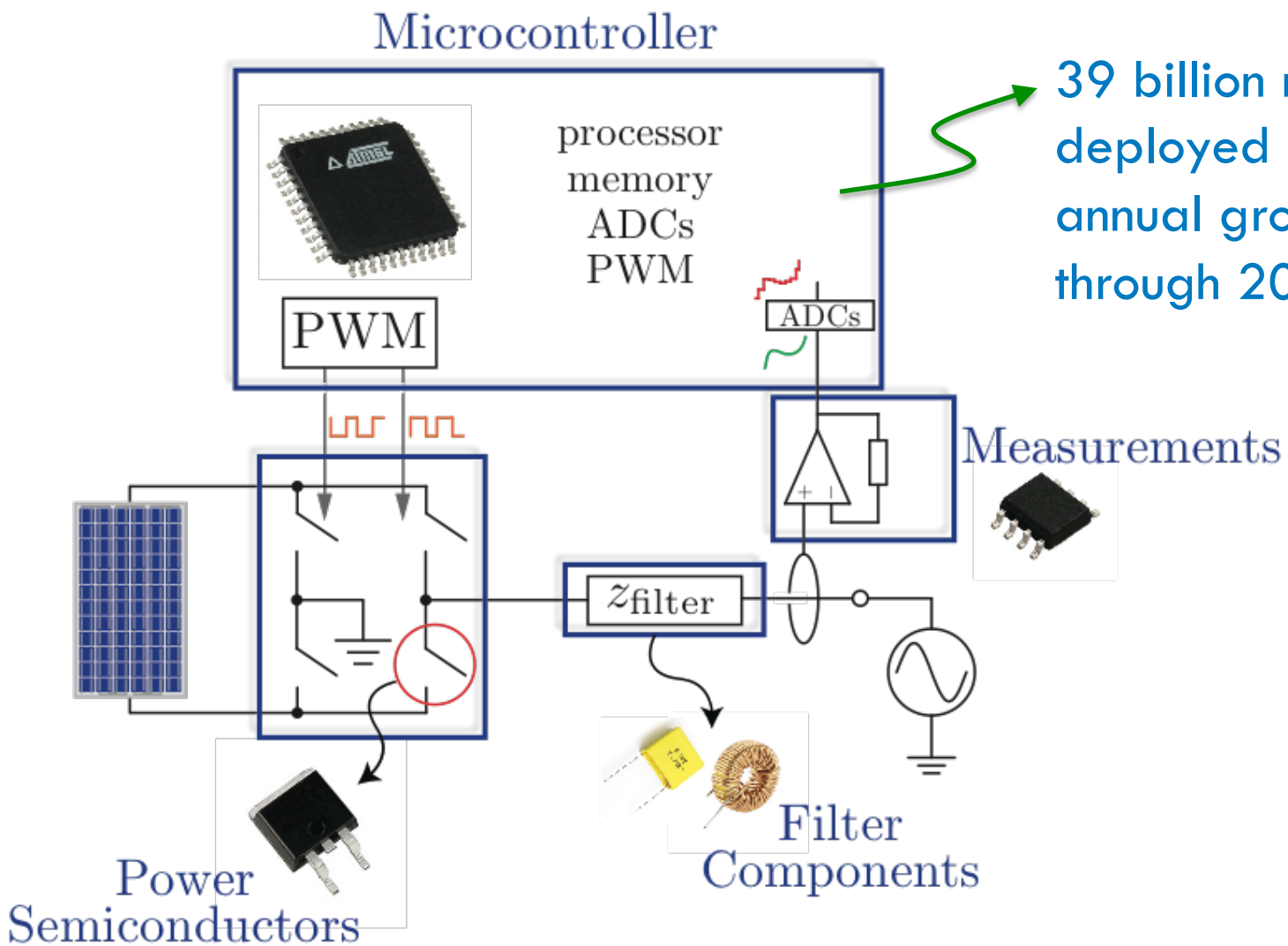

39 billion microcontrollers deployed in 2013, ~12% annual growth projected through 2020 [1]

[1] www.forbes.com/sites/greatspeculations/2014/09/16/tis-future-growth-likely-to-get-a-boost-from-an-increasing-focus-on-microcontrollers/

Virtual Oscillator Control

Proposed Approach

- *Virtual Oscillator Control*
- Inverter emulates a nonlinear oscillator circuit
- A time-domain controller
- This class of oscillator has been used to model phenomena in physics, biology, neurology.

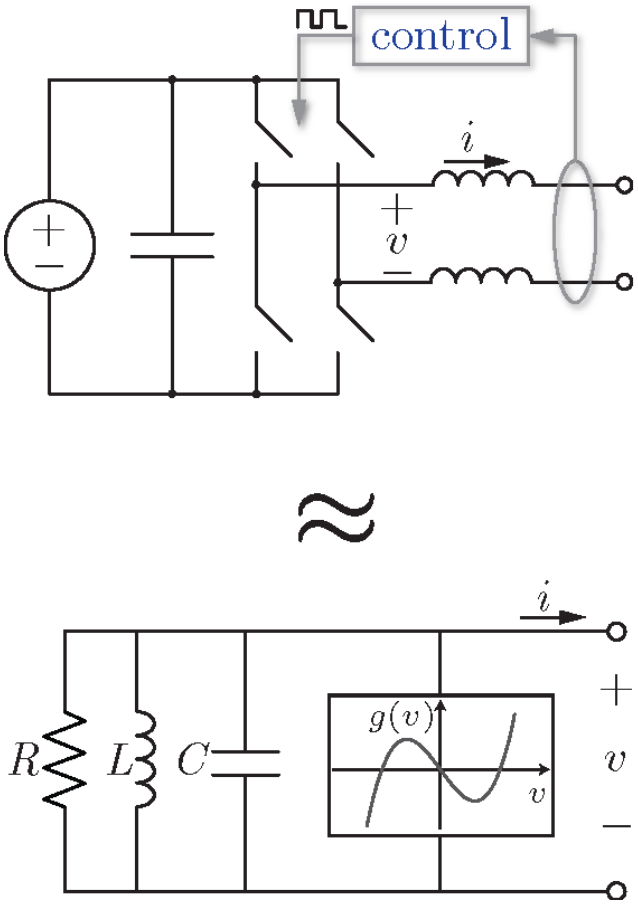

Part 1

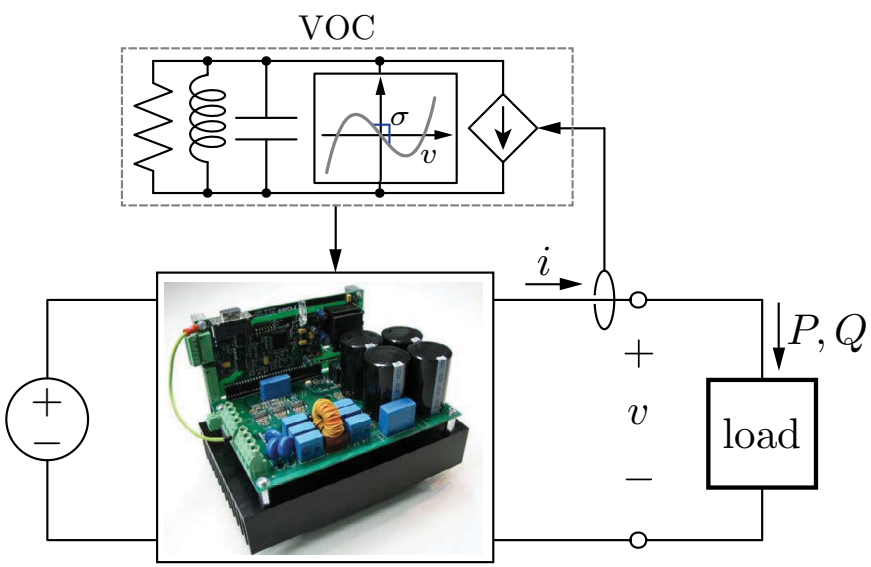

A Single Inverter with VOC

Part 2

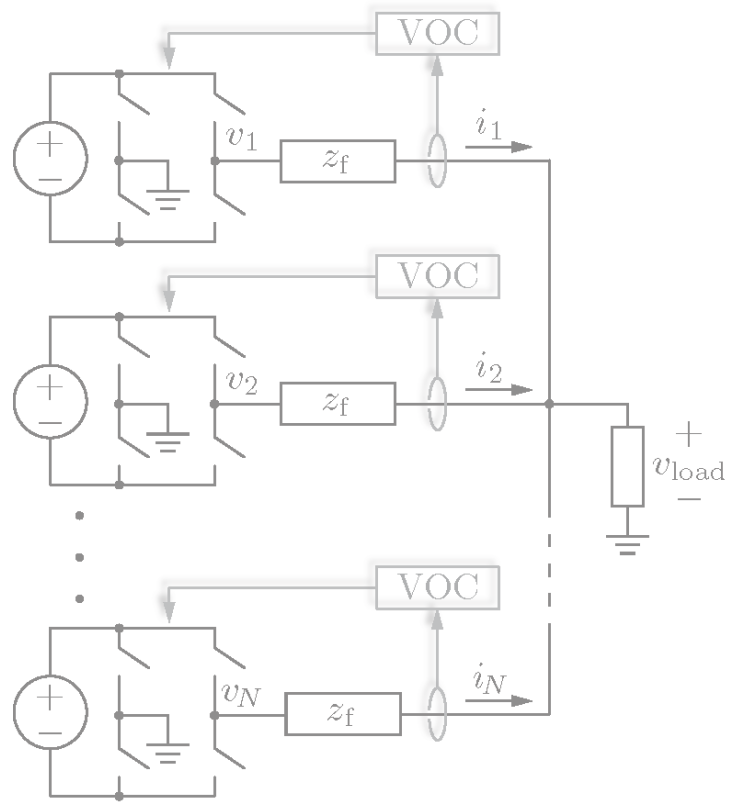

Networks

Virtual Oscillator Control Implementation

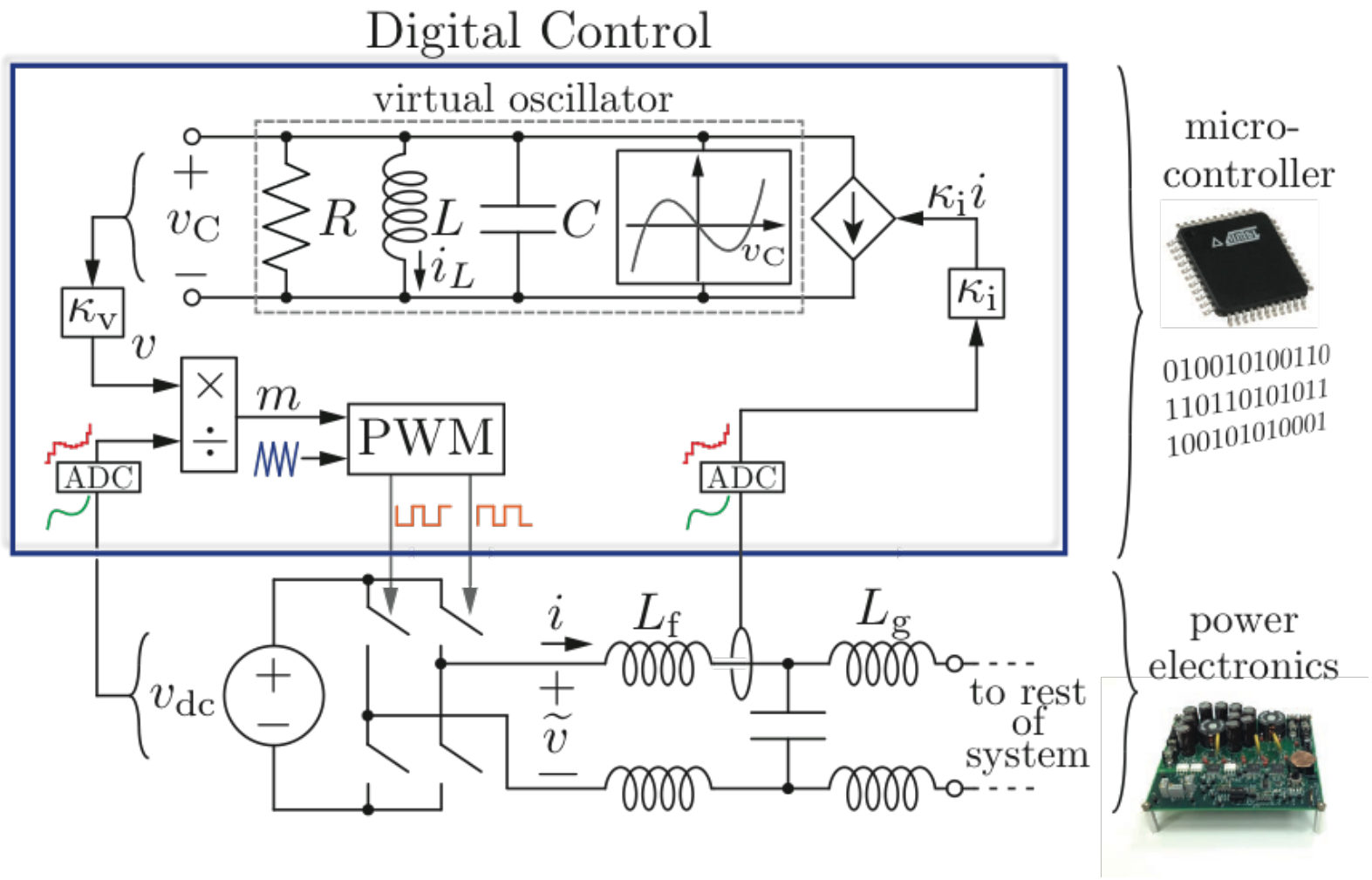

Background: Harmonic Oscillator

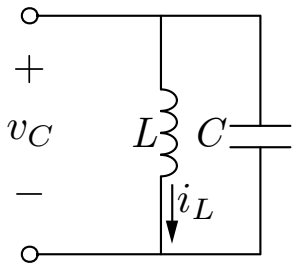

$$\ddot{v}_C + \frac{1}{LC} v_C = 0$$

$$\omega^* = \frac{1}{\sqrt{LC}}$$

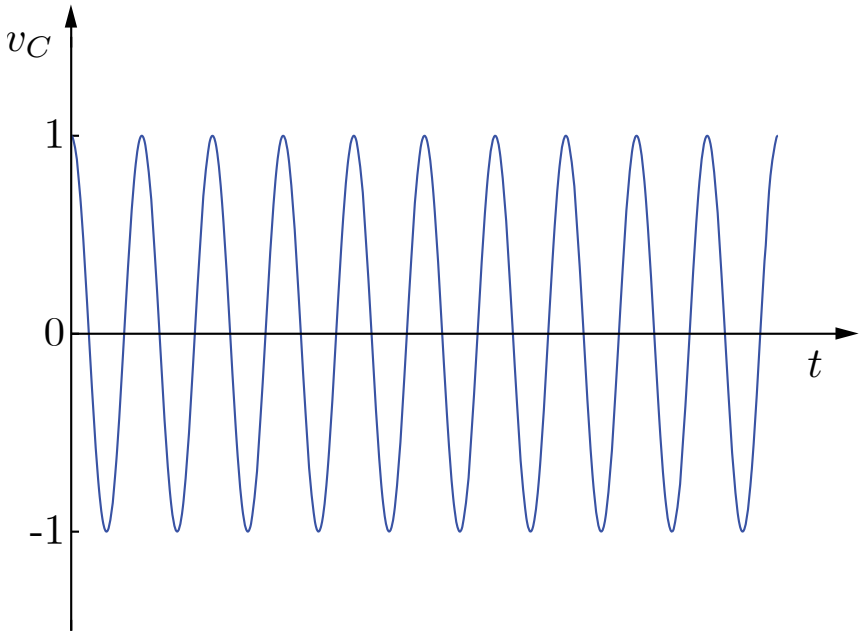

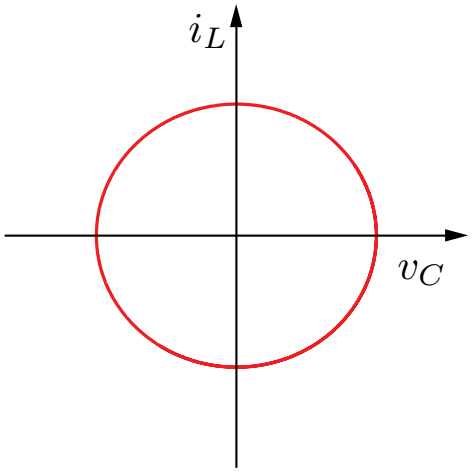

Background: Damped Harmonic Oscillator

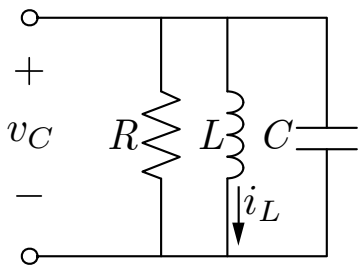

$$\ddot{v}_C + \frac{1}{RC}\dot{v}_C + \frac{1}{LC}v_C = 0$$

$$\omega^* = \frac{1}{\sqrt{LC}}$$

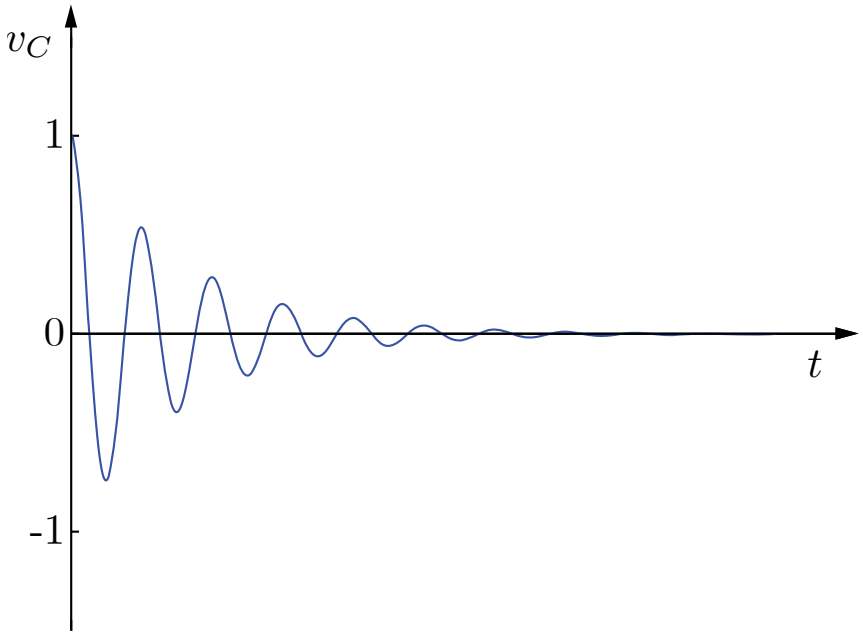

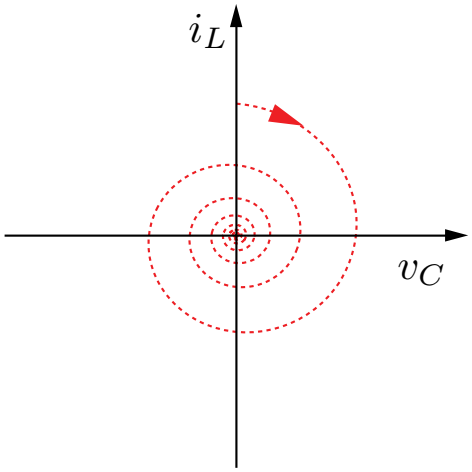

Lienard-Type Oscillator

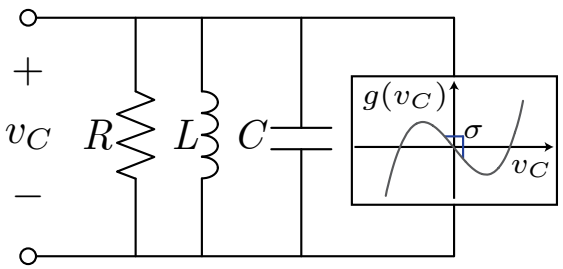

Yields self-sustaining oscillations

Parameter selection:

$$\omega^* = \frac{1}{\sqrt{LC}} \rightarrow \text{sets frequency}$$

$$\left(\sigma - \frac{1}{R}\right) \rightarrow \text{sets amplitude}$$

Lienard-Type Oscillator

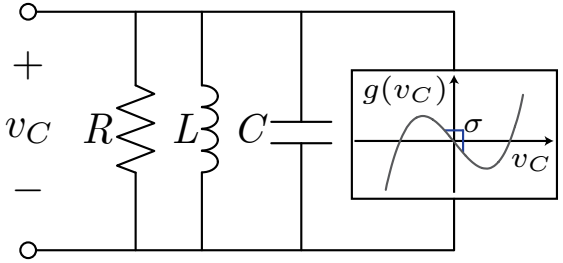

$$\ddot{v}_C + \frac{1}{C}\left(\frac{1}{R} + \frac{dg(v_C)}{dv_C}\right)\dot{v}_C + \frac{1}{LC}v_C = 0$$

$$\omega^* = \frac{1}{\sqrt{LC}}$$

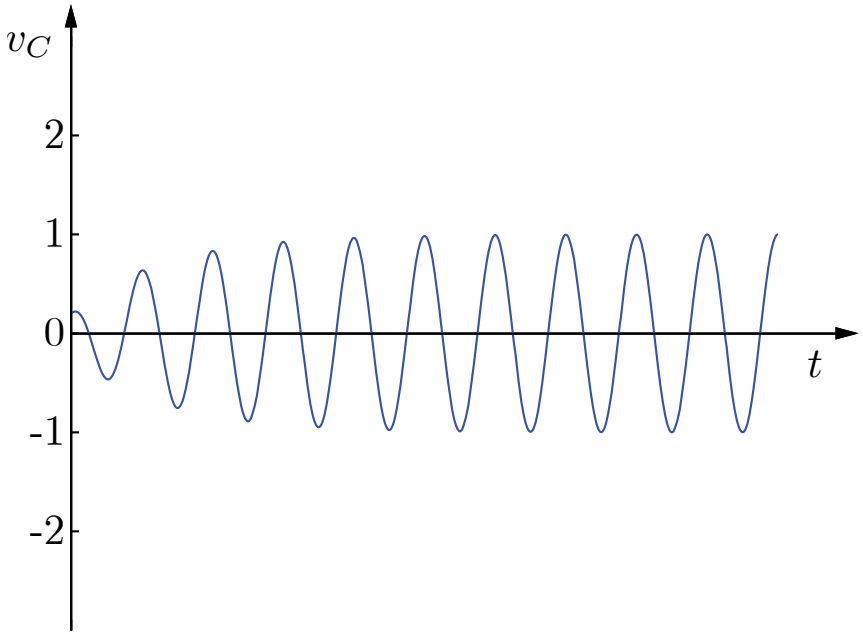

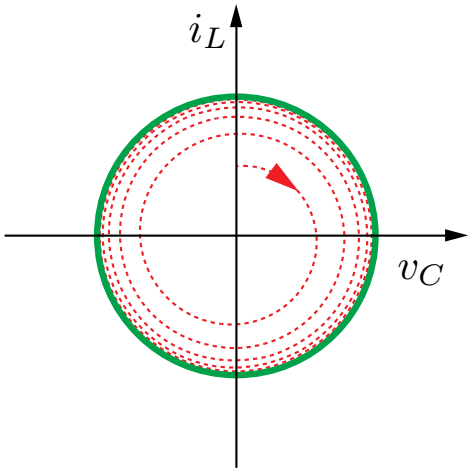

Lienard-Type Oscillator

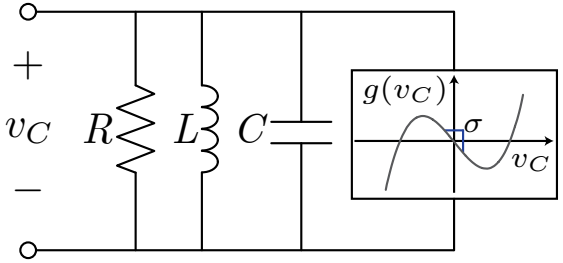

$$\ddot{v}_C + \frac{1}{C}\left(\frac{1}{R} + \frac{dg(v_C)}{dv_C}\right)\dot{v}_C + \frac{1}{LC}v_C = 0$$

$$\omega^* = \frac{1}{\sqrt{LC}}$$

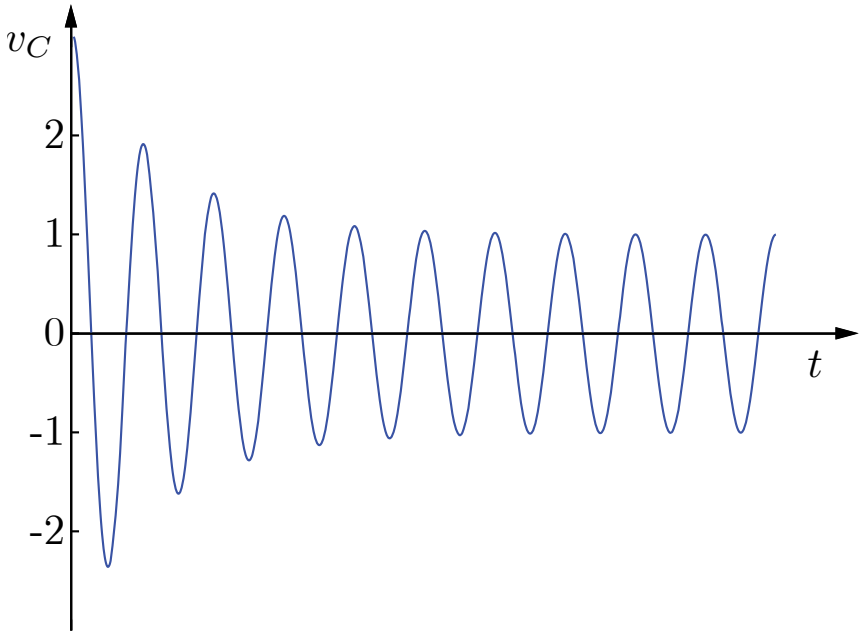

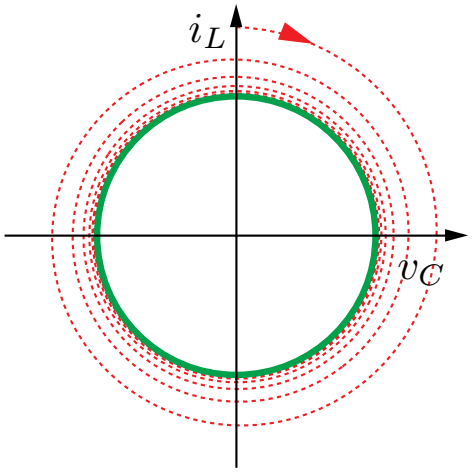

Lienard-Type Oscillator

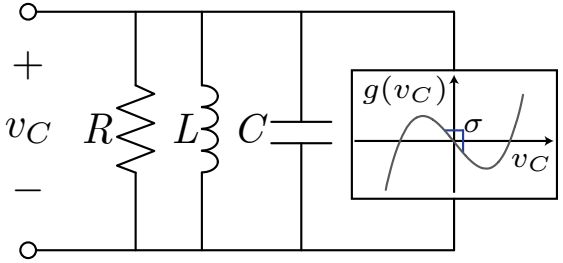

$$\ddot{v}_C + \frac{1}{C}\left(\frac{1}{R} + \frac{dg(v_C)}{dv_C}\right)\dot{v}_C + \frac{1}{LC}v_C = 0$$

$$\omega^* = \frac{1}{\sqrt{LC}}$$

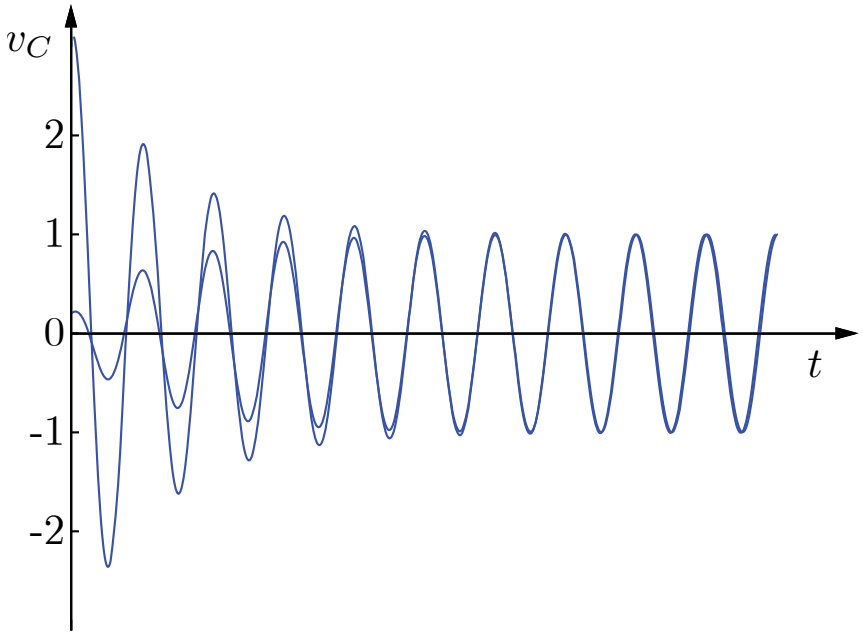

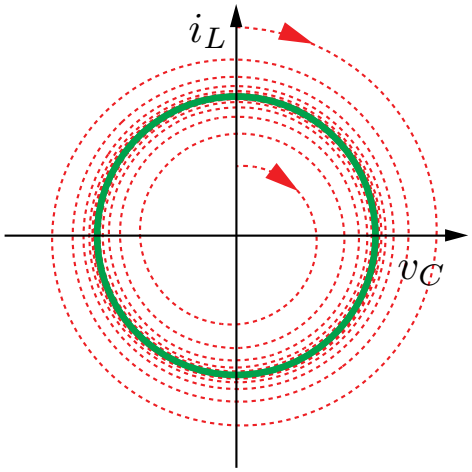

Power Delivery and VOC

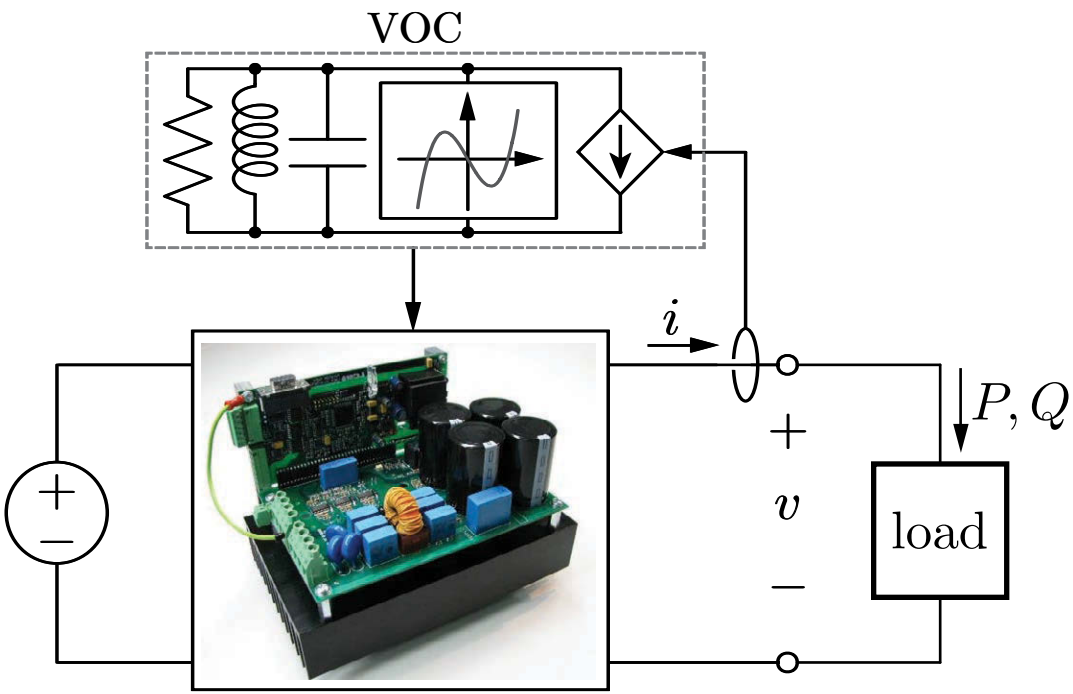

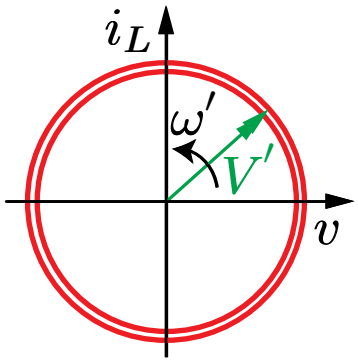

Power Delivery and VOC

- How do real and reactive power delivery affect voltage and frequency?
- Can a link between VOC and conventional methods be established?

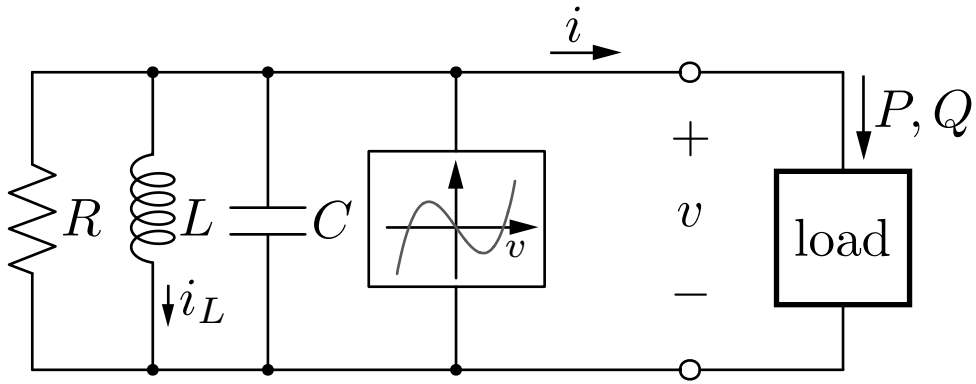

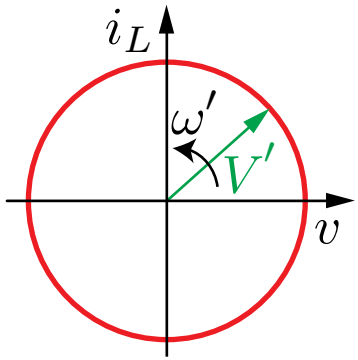

State of the Art

- Droop Control[1,2, 3]
- Inverter mimics synchronous machine
- Limitations:
  - Assumes sinusoidal steady state
  - Slow dynamics

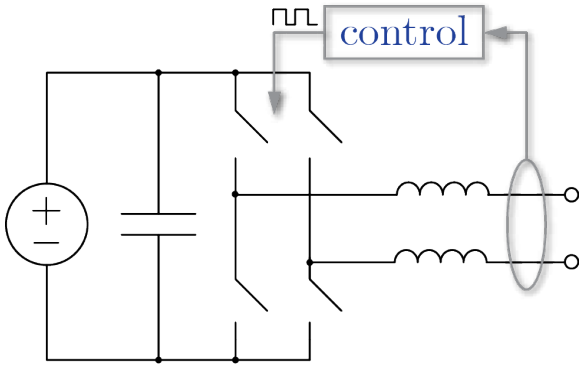

$$\overline{V} = \overline{V}^* - m_{\mathrm{P}}\overline{P} \qquad \omega = \omega^* + m_{\mathrm{Q}}\overline{Q}$$

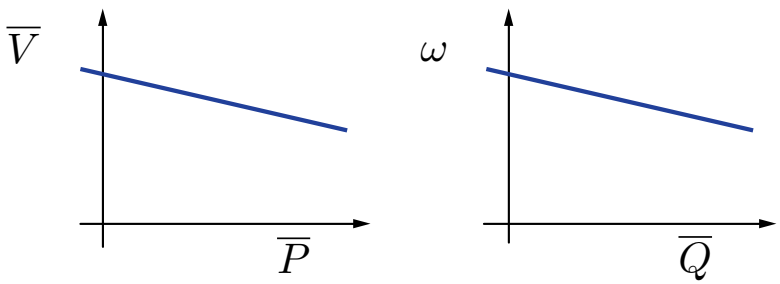

$\approx$

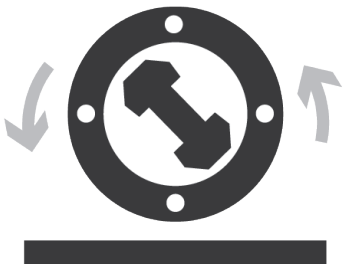

[1] M. Chandorkar, et. al, "Control of parallel connected inverters in standalone ac supply systems," *IEEE Transactions on Industrial Applications*, 1993.

[2] R. Lasseter, "Microgrids," in IEEE Power Eng. Society Winter Meeting, 2002.

[3] J. Guerrero, et. al, "Hierarchical control of droop-controlled dc and ac microgrids," *IEEE Transactions on Industrial Electronics*, 2011.

VOC Subsumes Droop Control

- Droop laws can be recovered from the complex dynamics of nonlinear oscillators

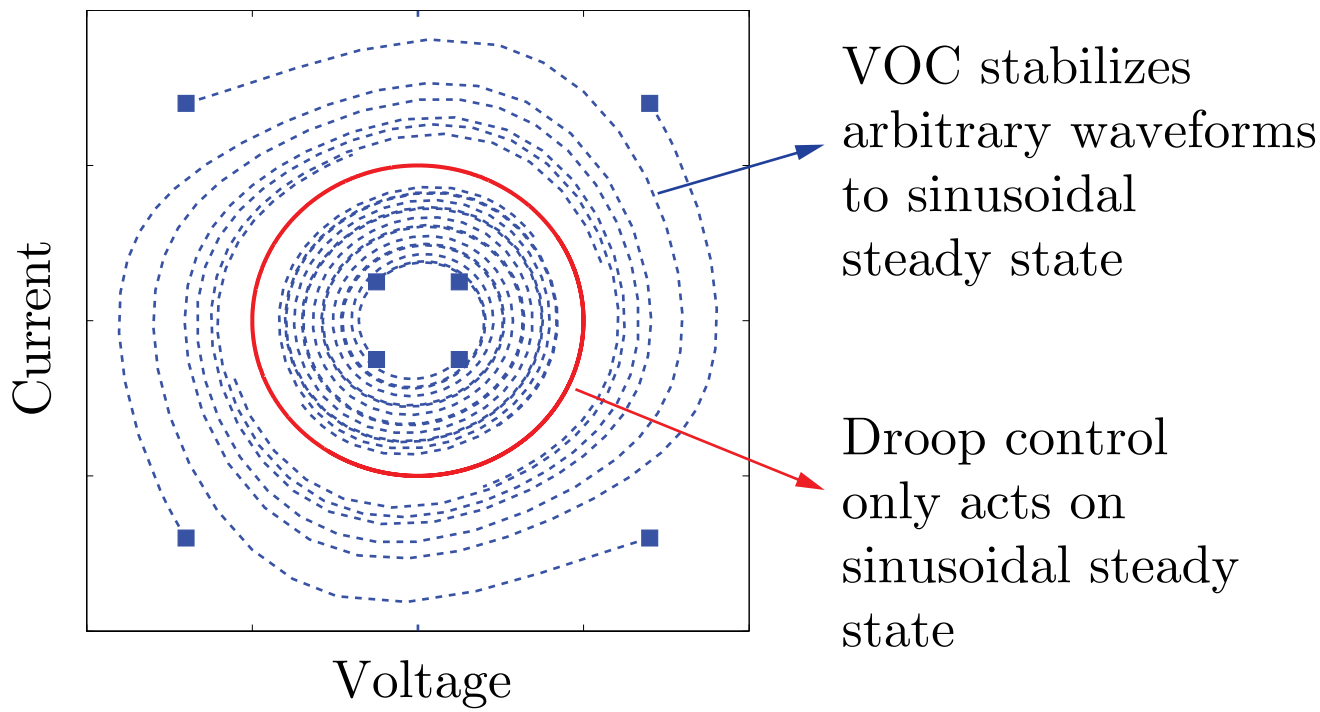

Time-domain Response Comparison: Simulation

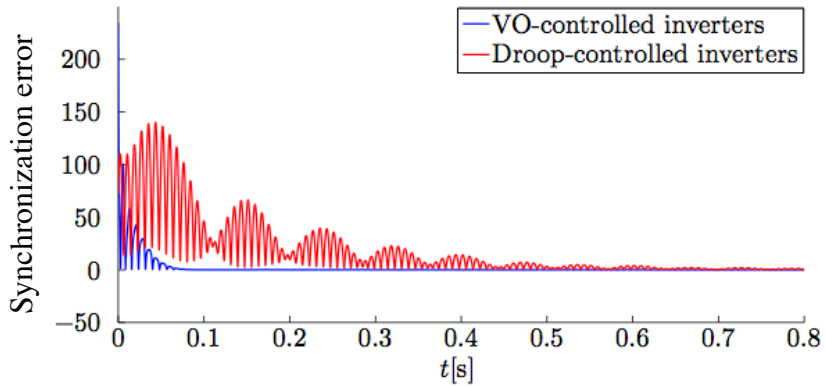

Startup from random initial conditions

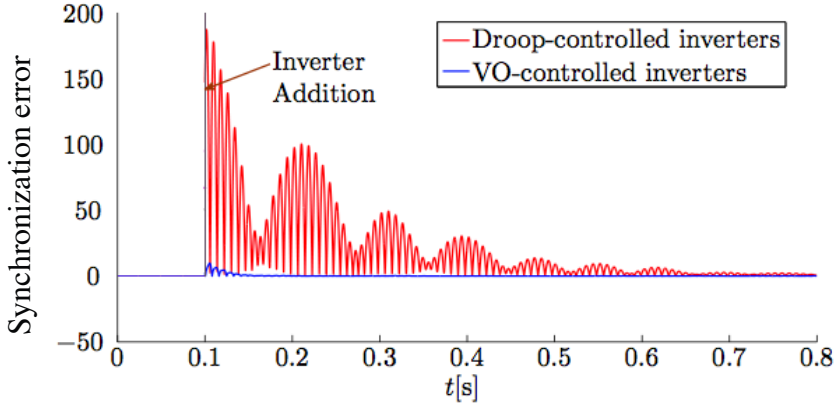

Adding 3rd inverter at t = 0.1s

Proposed Framework

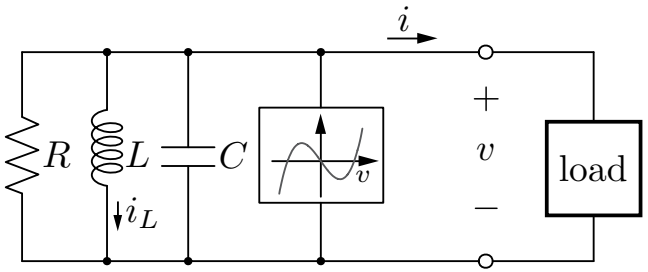

$$L\frac{di_L}{dt} = v$$
$$C\frac{dv}{dt} = -\alpha v^3 + \sigma v - i_L - i$$

1. Cartesian to polar transformation

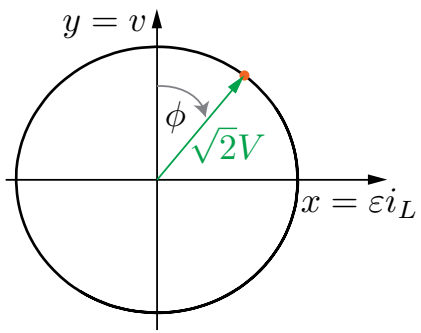

$$\dot{V} = h_1(V, i, \phi)$$
$$\dot{\phi} = h_2(V, i, \phi)$$

[1] S.E.Tuna, "Synchronization analysis of coupled Lienard-type oscillators by averaging," *Automatica*, vol. 48, no. 8, pp. 1885–1891, 2012.

[2] H. K. Khalil, Nonlinear Systems. Prentice Hall, 3 ed., 2002.

Proposed Framework

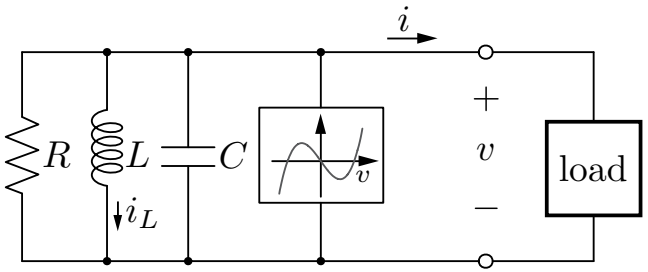

$$L\frac{di_L}{dt} = v$$
$$C\frac{dv}{dt} = -\alpha v^3 + \sigma v - i_L - i$$

1. Cartesian to polar transformation

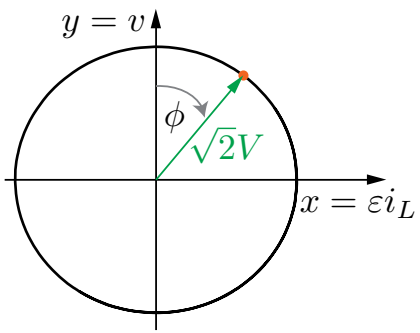

$$\dot{V} = h_1(V, i, \phi)$$
$$\dot{\phi} = h_2(V, i, \phi)$$

2. Averaging[1,2]

$$\overline{P} = \frac{1}{T}\int_{t=0}^{T} v(t)i(t)\,dt$$
$$\overline{Q} = \frac{1}{T}\int_{t=0}^{T} v\left(t - \frac{\pi}{2}\right) i(t)\,dt$$

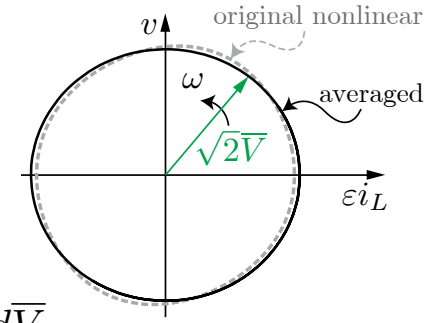

$$\frac{d\overline{V}}{dt} = f_1\left(\overline{V}, \overline{P}\right)$$
$$\frac{d\overline{\theta}}{dt} = f_2\left(\overline{V}, \omega, \overline{Q}\right)$$

[1] S.E.Tuna, "Synchronization analysis of coupled Lienard-type oscillators by averaging," *Automatica*, vol. 48, no. 8, pp. 1885–1891, 2012.

[2] H. K. Khalil, Nonlinear Systems. Prentice Hall, 3 ed., 2002.

Proposed Framework

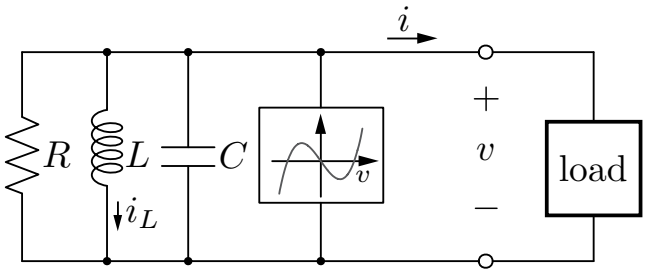

$$L\frac{di_L}{dt} = v$$
$$C\frac{dv}{dt} = -\alpha v^3 + \sigma v - i_L - i$$

1. Cartesian to polar transformation

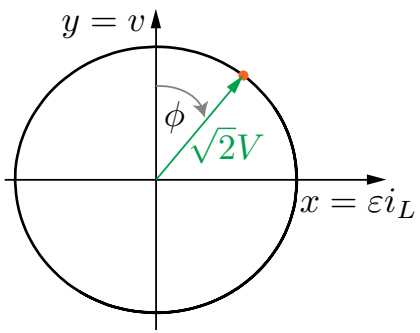

$$\dot{V} = h_1(V, i, \phi)$$
$$\dot{\phi} = h_2(V, i, \phi)$$

2. Averaging[1,2]

$$\overline{P} = \frac{1}{T}\int_{t=0}^{T} v(t)i(t)\,dt$$
$$\overline{Q} = \frac{1}{T}\int_{t=0}^{T} v\left(t - \frac{\pi}{2}\right) i(t)\,dt$$

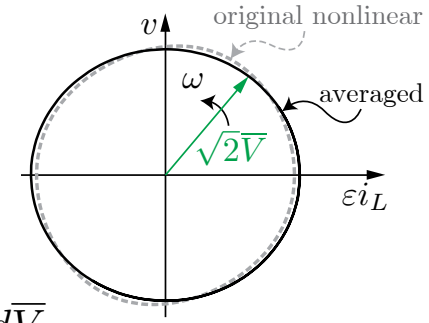

$$\frac{d\overline{V}}{dt} = f_1\left(\overline{V}, \overline{P}\right)$$
$$\frac{d\overline{\theta}}{dt} = f_2\left(\overline{V}, \omega, \overline{Q}\right)$$

3. Evaluate and compare equilibria of VOC to droop

VOC		Droop
$0 = f_1\left(\overline{V}_{\mathrm{eq}}, \overline{P}_{\mathrm{eq}}\right)$	Vs.	$\overline{V}_{\mathrm{eq}} = \overline{V}^* - m_{\mathrm{P}}\overline{P}_{\mathrm{eq}}$
$0 = f_2\left(\overline{V}_{\mathrm{eq}}, \omega_{\mathrm{eq}}, \overline{Q}_{\mathrm{eq}}\right)$		$\omega_{\mathrm{eq}} = \omega^* + m_{\mathrm{Q}}\overline{Q}_{\mathrm{eq}}$

[1] S.E.Tuna, "Synchronization analysis of coupled Lienard-type oscillators by averaging," *Automatica*, vol. 48, no. 8, pp. 1885–1891, 2012.

[2] H. K. Khalil, Nonlinear Systems. Prentice Hall, 3 ed., 2002.

Comparison of VOC and Droop

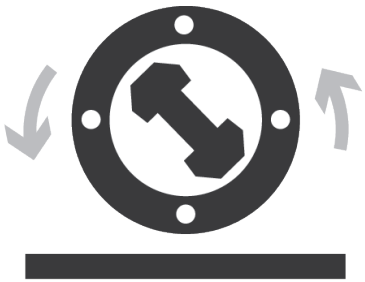

$$\approx$$

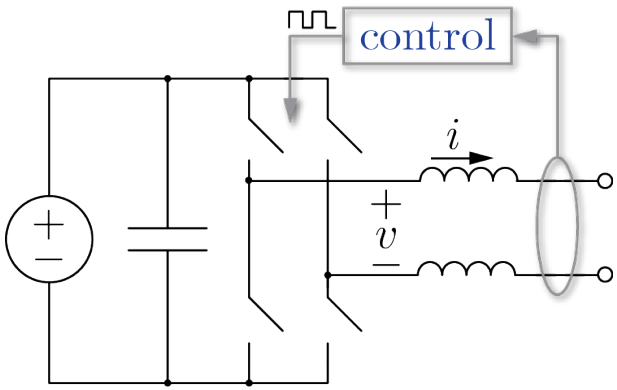

$$\approx$$

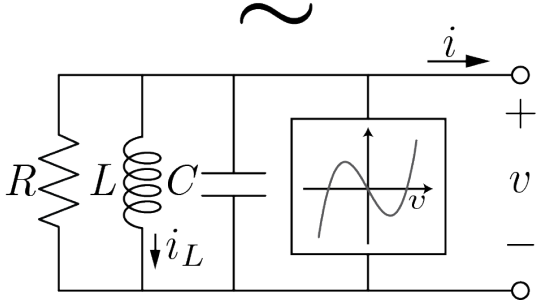

$$\begin{cases} \overline{V}_{\mathrm{eq}} = \overline{V}^{*} - m_{\mathrm{P}}\overline{P}_{\mathrm{eq}} \\ \omega_{\mathrm{eq}} = \omega^{*} + m_{\mathrm{Q}}\overline{Q}_{\mathrm{eq}} \end{cases}$$

What is the link?

$$\begin{cases} 0 = \dfrac{\sigma}{2C}\left(\overline{V}_{\mathrm{eq}} - \dfrac{\beta}{2}\overline{V}_{\mathrm{eq}}^{3}\right) - \dfrac{1}{2C\overline{V}_{\mathrm{eq}}}\overline{P}_{\mathrm{eq}}, \\ \omega_{\mathrm{eq}} = \omega^{*} + \dfrac{1}{2C\overline{V}_{\mathrm{eq}}^{2}}\overline{Q}_{\mathrm{eq}}. \end{cases}$$

Comparison of VOC and Droop

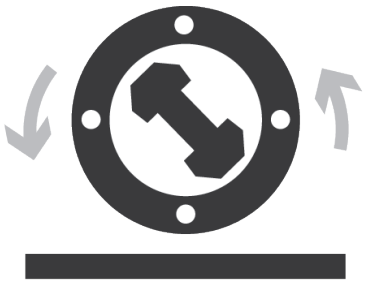

$\approx$

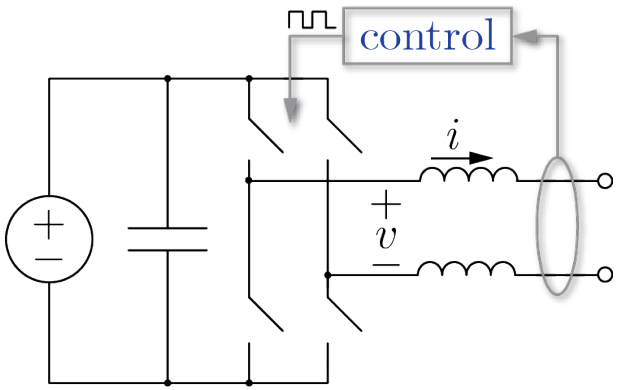

$\approx$

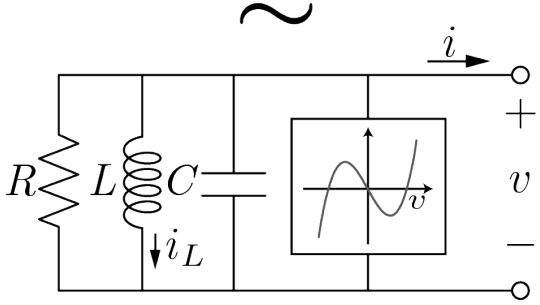

$$\begin{cases} \bullet\ \overline{V}_{\mathrm{eq}} = \overline{V}^{*} - m_{\mathrm{P}}\overline{P}_{\mathrm{eq}} \\ \bullet\ \omega_{\mathrm{eq}} = \omega^{*} + m_{\mathrm{Q}}\overline{Q}_{\mathrm{eq}} \end{cases}$$

frequency

$$m_{\mathrm{Q}} = \frac{1}{2C\overline{V}_{\mathrm{eq}}^{2}}$$

amplitude

$$m_{\mathrm{P}} = \frac{1}{2\sigma\left(\overline{V}_{\mathrm{eq}} - \beta\overline{V}_{\mathrm{eq}}^{3}\right)}$$

$$\overline{V}^{*} = \overline{V}_{\mathrm{max}}$$

$$\begin{cases} \bullet\ 0 = \dfrac{\sigma}{2C}\left(\overline{V}_{\mathrm{eq}} - \dfrac{\beta}{2}\overline{V}_{\mathrm{eq}}^{3}\right) - \dfrac{1}{2C\overline{V}_{\mathrm{eq}}}\overline{P}_{\mathrm{eq}}, \\ \bullet\ \omega_{\mathrm{eq}} = \omega^{*} + \dfrac{1}{2C\overline{V}_{\mathrm{eq}}^{2}}\overline{Q}_{\mathrm{eq}}. \end{cases}$$

Practical Outcomes

- **Backwards compatibility**
- Closed form design

Droop parameters

$$m_{\mathrm{P}} = \frac{1}{2\sigma\left(\overline{V}_{\mathrm{eq}} - \beta\overline{V}_{\mathrm{eq}}^{3}\right)}$$

$$m_{\mathrm{Q}} = \frac{1}{2C\overline{V}_{\mathrm{eq}}^{2}}$$

$\longleftrightarrow$

VOC parameters

$$\sigma = \frac{1}{2m_{\mathrm{P}}}$$

$$C = \frac{1}{2m_{\mathrm{Q}}\overline{V}_{\mathrm{max}}}$$

Practical Outcomes

- Backwards compatibility
- **Closed form design**

Ac Performance Specifications

$$\overline{V}_{\text{min}} \leq \overline{V}_{\text{eq}} \leq \overline{V}_{\text{max}}$$
$$\omega_{\text{min}} \leq \omega_{\text{eq}} \leq \omega_{\text{max}}$$
$$\overline{P}_{\text{rated}}, \overline{Q}_{\text{rated}}$$
$$\vdots$$
$$t_{\text{rise}} \leq t_{\text{rise}}^{\text{max}}$$

VOC parameters

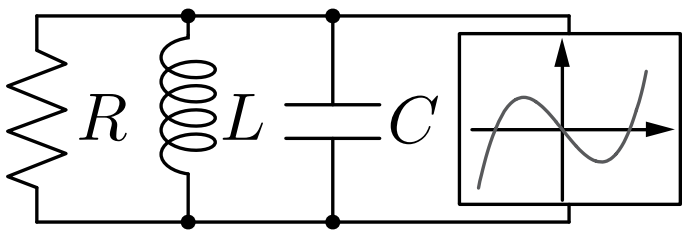

Experimental Setup

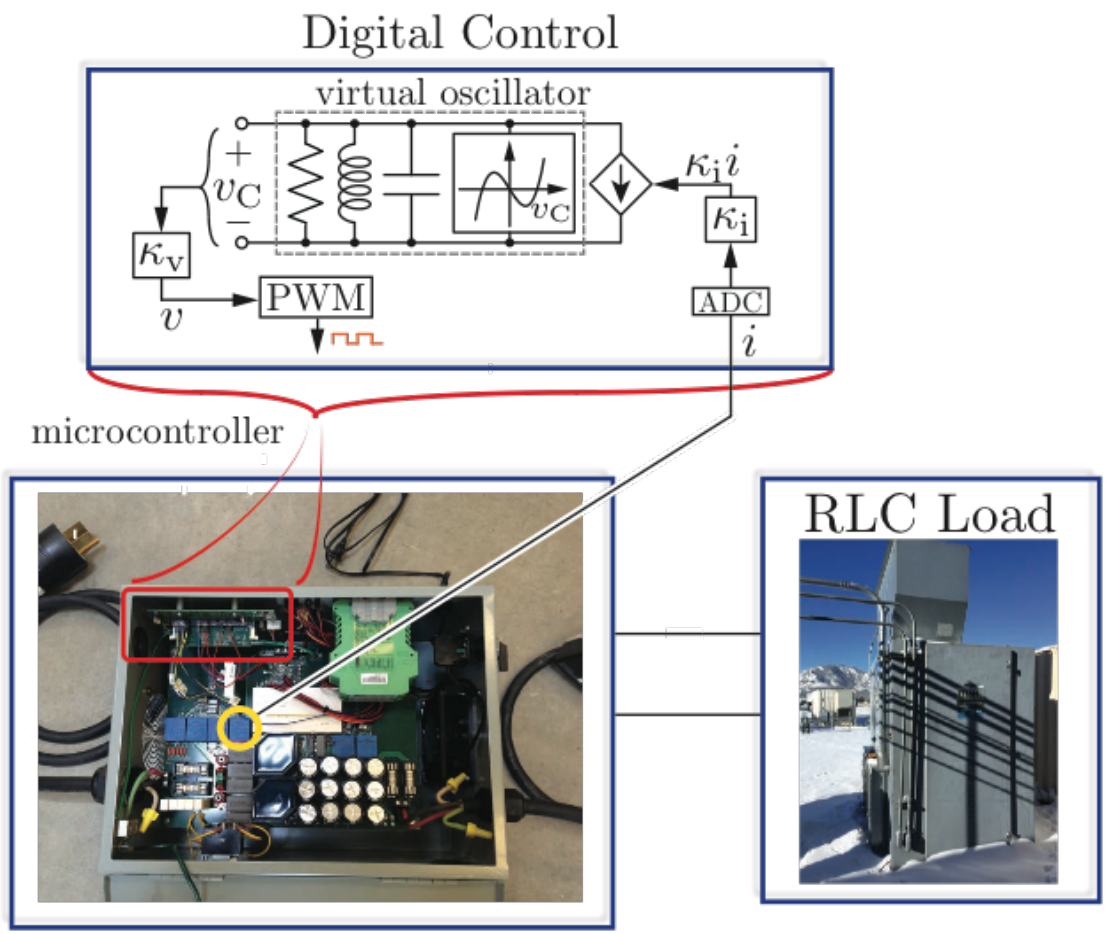

- System parameters

  $V_{rms} = 120\,V$

  $f = 60\,Hz$

  $P_{rated} = 750\,W$

B. Johnson, M. Sinha, N. Ainsworth, F. Dorfler, and S. Dhople, "Synthesizing virtual oscillators to control islanded inverters," *IEEE Transactions on Power Electronics*, 2015, In Press.

Voltage vs. Real Power

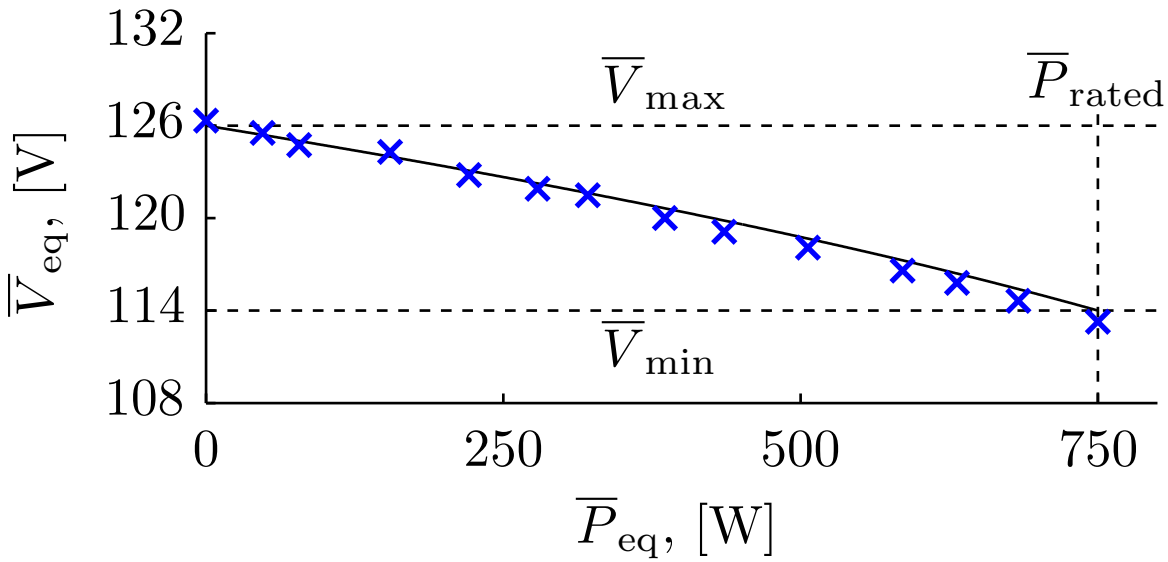

× ≡ Experimental Trial

Frequency vs. Reactive Power

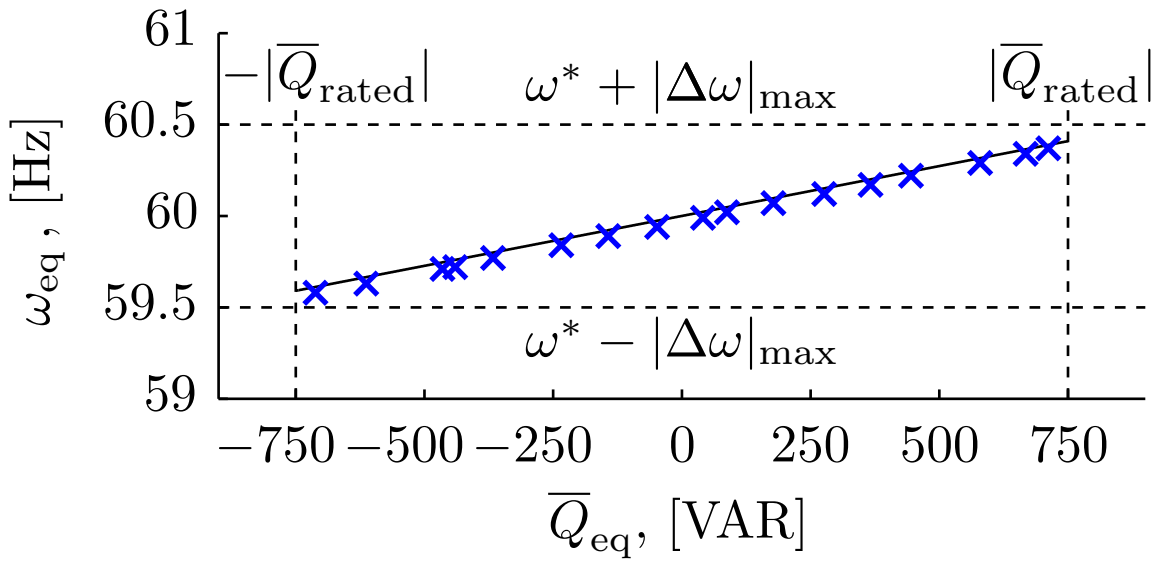

× ≡ Experimental Trial

Rise Time

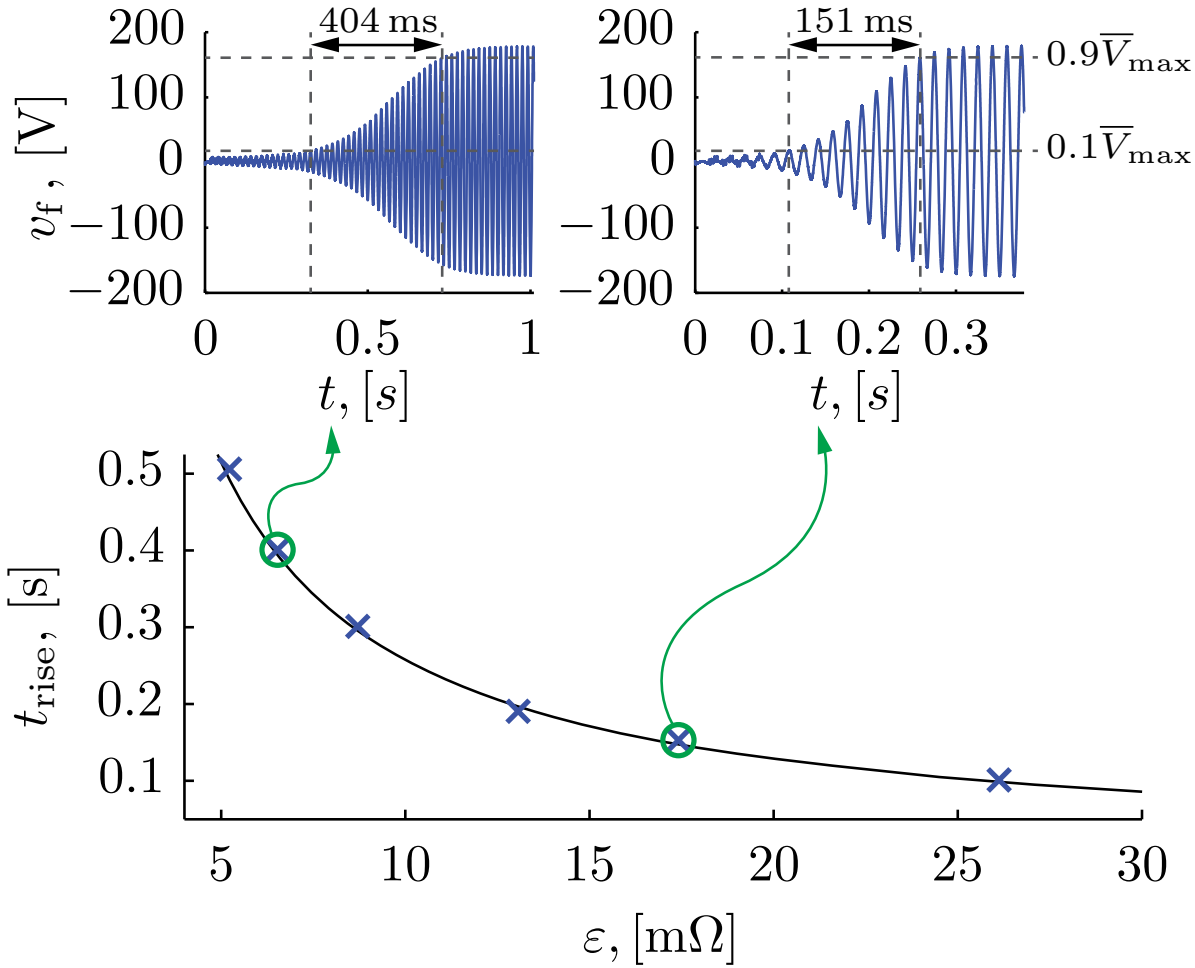

× ≡ Experimental Trial

Part 1

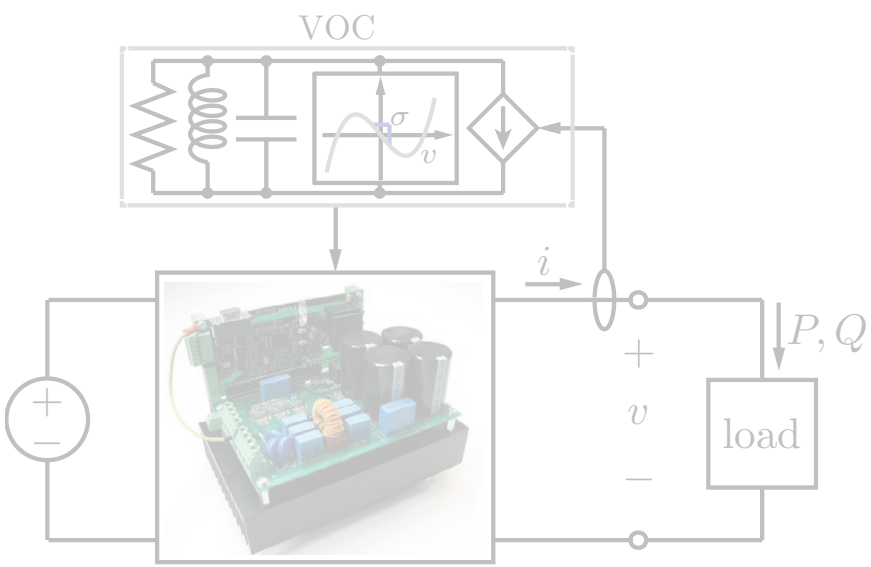

A Single Inverter with VOC

Part 2

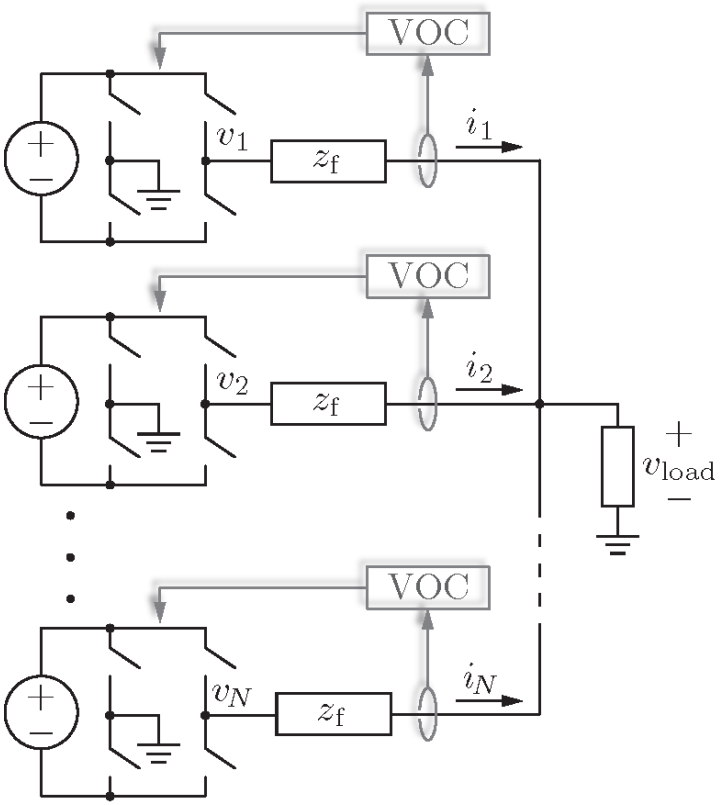

Networks

Van der Pol Oscillator

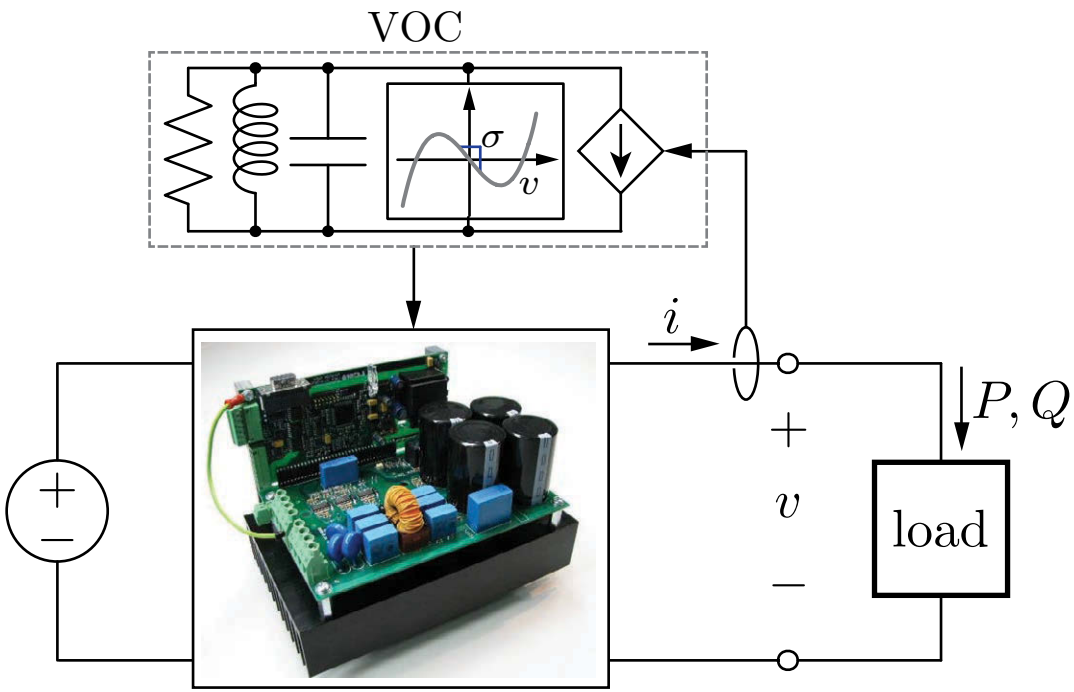

Deadzone Oscillator

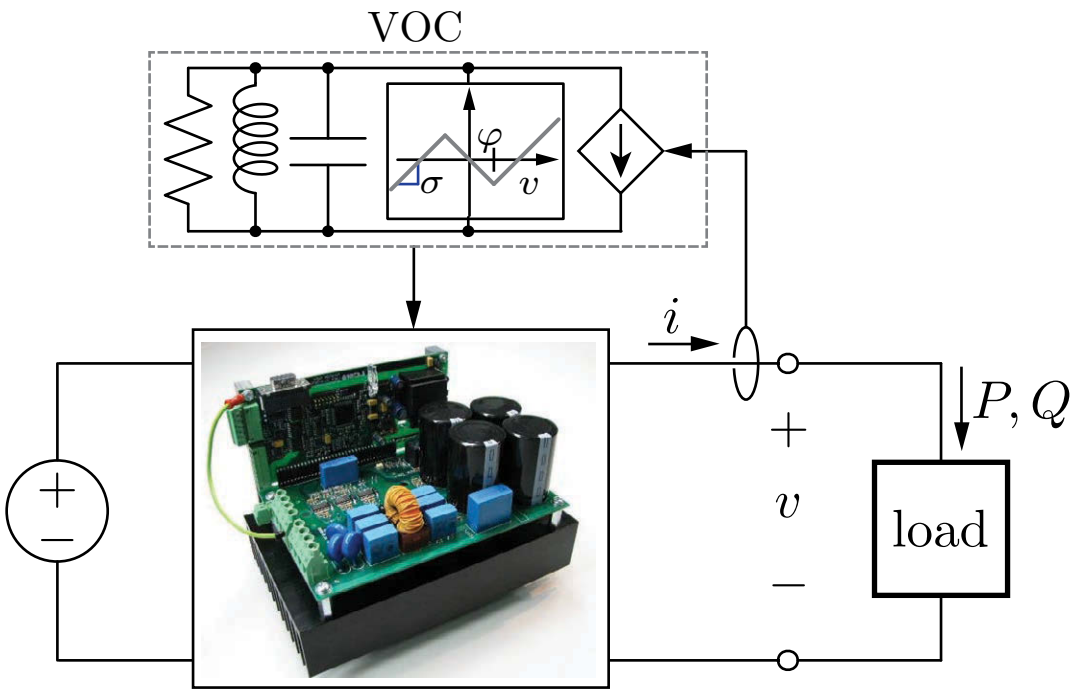

System-Level Behavior

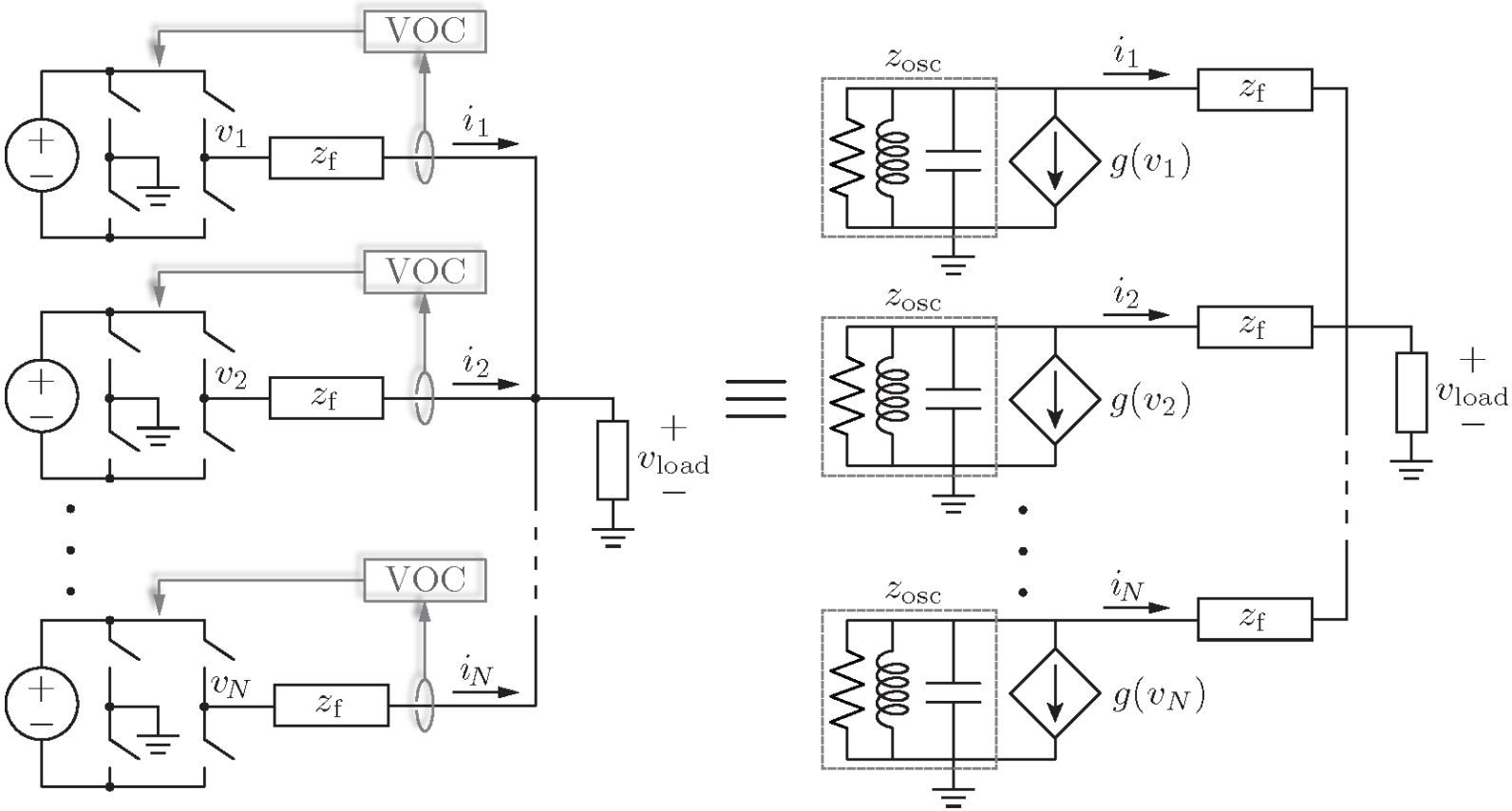

- Condition for global asymptotic synchronization:

$$\sup_{\omega \in \mathbb{R}} \left\| \frac{z_f(j\omega) z_{osc}(j\omega)}{z_f(j\omega) + z_{osc}(j\omega)} \right\|_2 \sigma < 1$$

System-Level Behavior

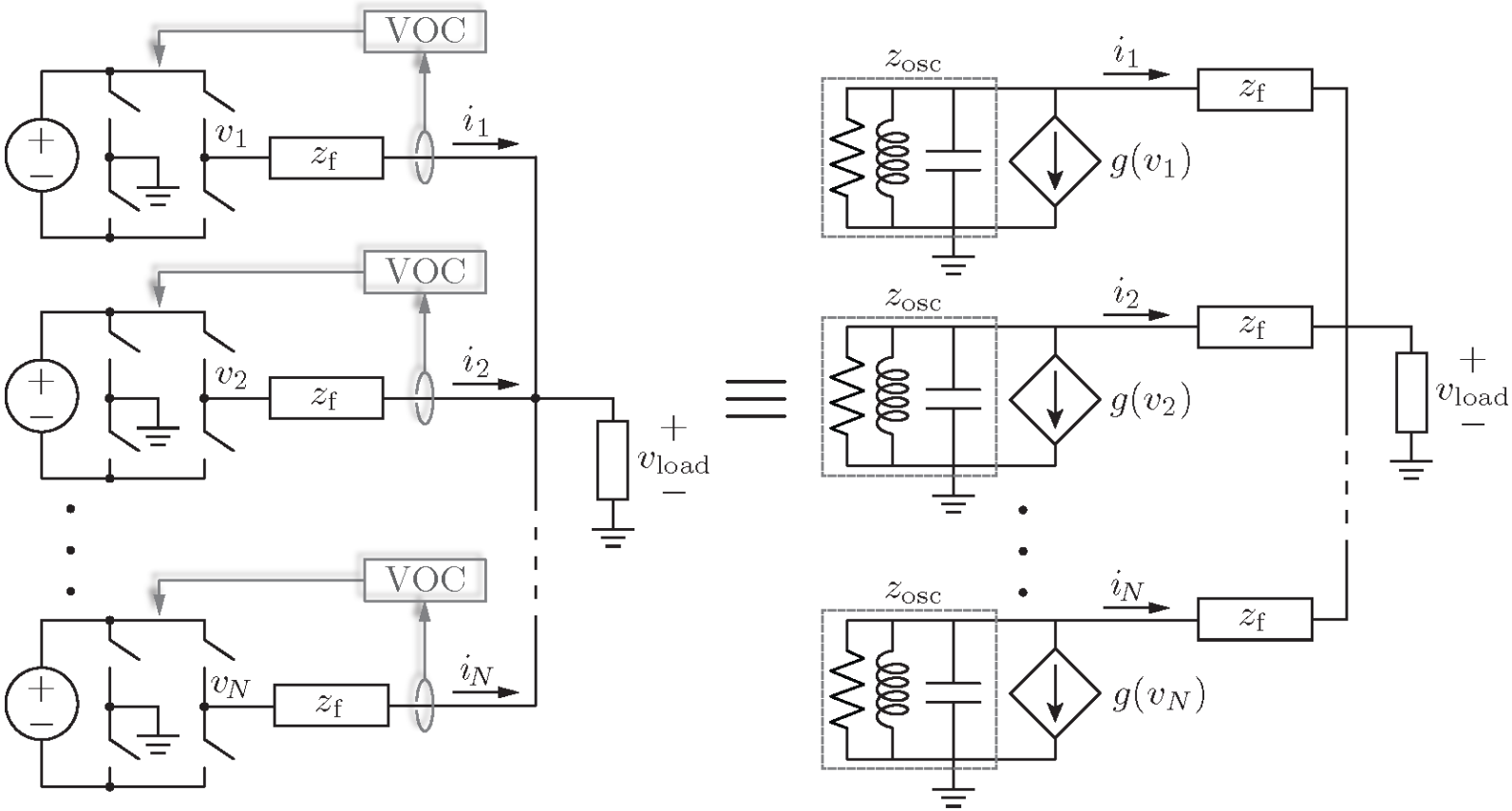

- Condition for global asymptotic synchronization:

$$\sup_{\omega \in \mathbb{R}} \left\| \frac{z_f(j\omega) z_{osc}(j\omega)}{z_f(j\omega) + z_{osc}(j\omega)} \right\|_2 \sigma < 1$$

Advantages:

- Modular
- Robust
- Resilient

Established Techniques

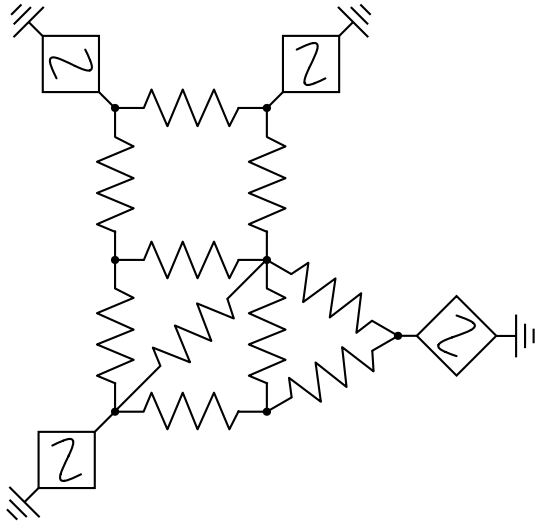

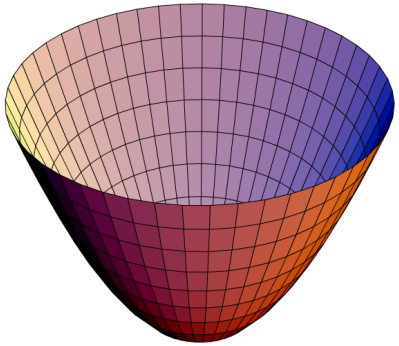

- *Existing framework*: Resistive networks
- *Analysis*: Storage function proportional to signal differences

- *Power systems*: Storage elements pervasive in network
- *Consequences*: Formulation of storage function is difficult

[1] M. Arcak, "Passivity as a design tool for group coordination," *IEEE Transactions on Automatic Control*, 2007.

[2] G.-B. Stan, R. Sepulchre, "Analysis of interconnected oscillators by dissipativity theory," *IEEE Transactions Automatic Control*, 2007.

[3] A. Pogromsky, H. Nijmeijer, "Cooperative oscillatory behavior of mutually coupled dynamical systems, *IEEE Transactions on Circuits and Systems,* 2001.

Established Techniques

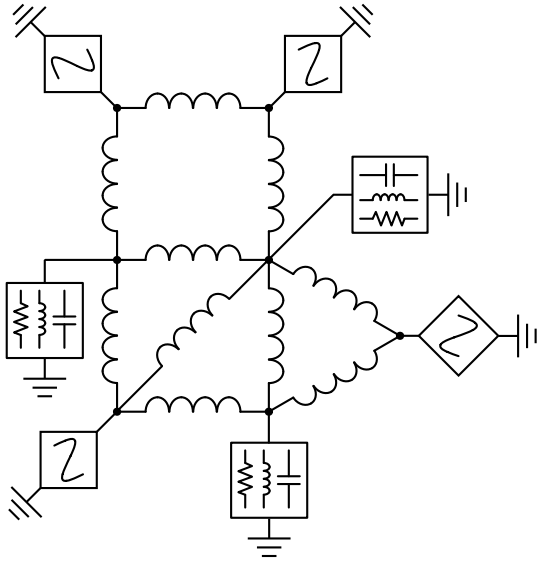

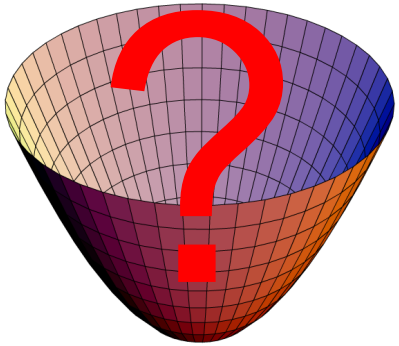

- *Existing framework*: Resistive networks
- *Analysis*: Storage function proportional to signal differences

- *Power systems*: Storage elements pervasive in network
- *Consequences*: Formulation of storage function is difficult

[1] M. Arcak, "Passivity as a design tool for group coordination," *IEEE Transactions on Automatic Control*, 2007.

[2] G.-B. Stan, R. Sepulchre, "Analysis of interconnected oscillators by dissipativity theory," *IEEE Transactions Automatic Control*, 2007.

[3] A. Pogromsky, H. Nijmeijer, "Cooperative oscillatory behavior of mutually coupled dynamical systems, *IEEE Transactions on Circuits and Systems,* 2001.

Our Approach

original system:

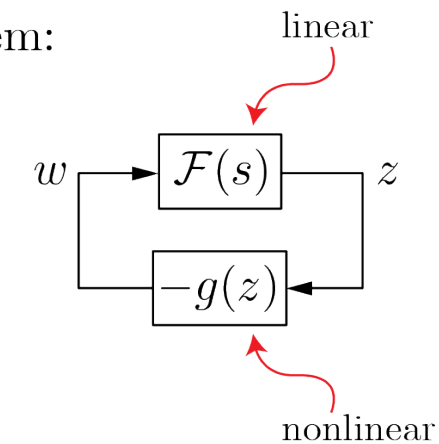

1) Compartmentalize linear and nonlinear subsystems
2) Perform coordinate transformation
3) Prove stability

[1] A. Hamadeh, Constructive Robust Synchronization of Networked Control Systems. PhD thesis, Cambridge University, UK, June 2010.

[2] **B. Johnson**, S. Dhople, A. Hamadeh, P. Krein, "Synchronization of nonlinear oscillators in an LTI electrical network," *IEEE Transactions on Circuits and Systems*, 2014.

Our Approach

differential system:

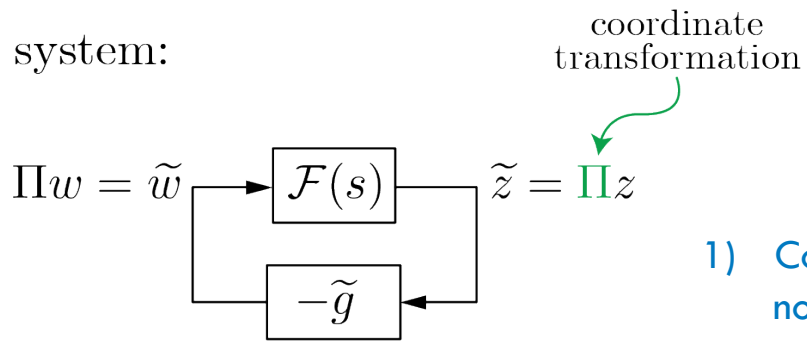

1) Compartmentalize linear and nonlinear subsystems
2) Perform coordinate transformation
3) Prove stability

Stability in coordinate transformed system $\Longrightarrow$ *Synchronization* in original system

[1] A. Hamadeh, Constructive Robust Synchronization of Networked Control Systems. PhD thesis, Cambridge University, UK, June 2010.

[2] **B. Johnson**, S. Dhople, A. Hamadeh, P. Krein, "Synchronization of nonlinear oscillators in an LTI electrical network," *IEEE Transactions on Circuits and Systems*, 2014.

Network of Oscillators

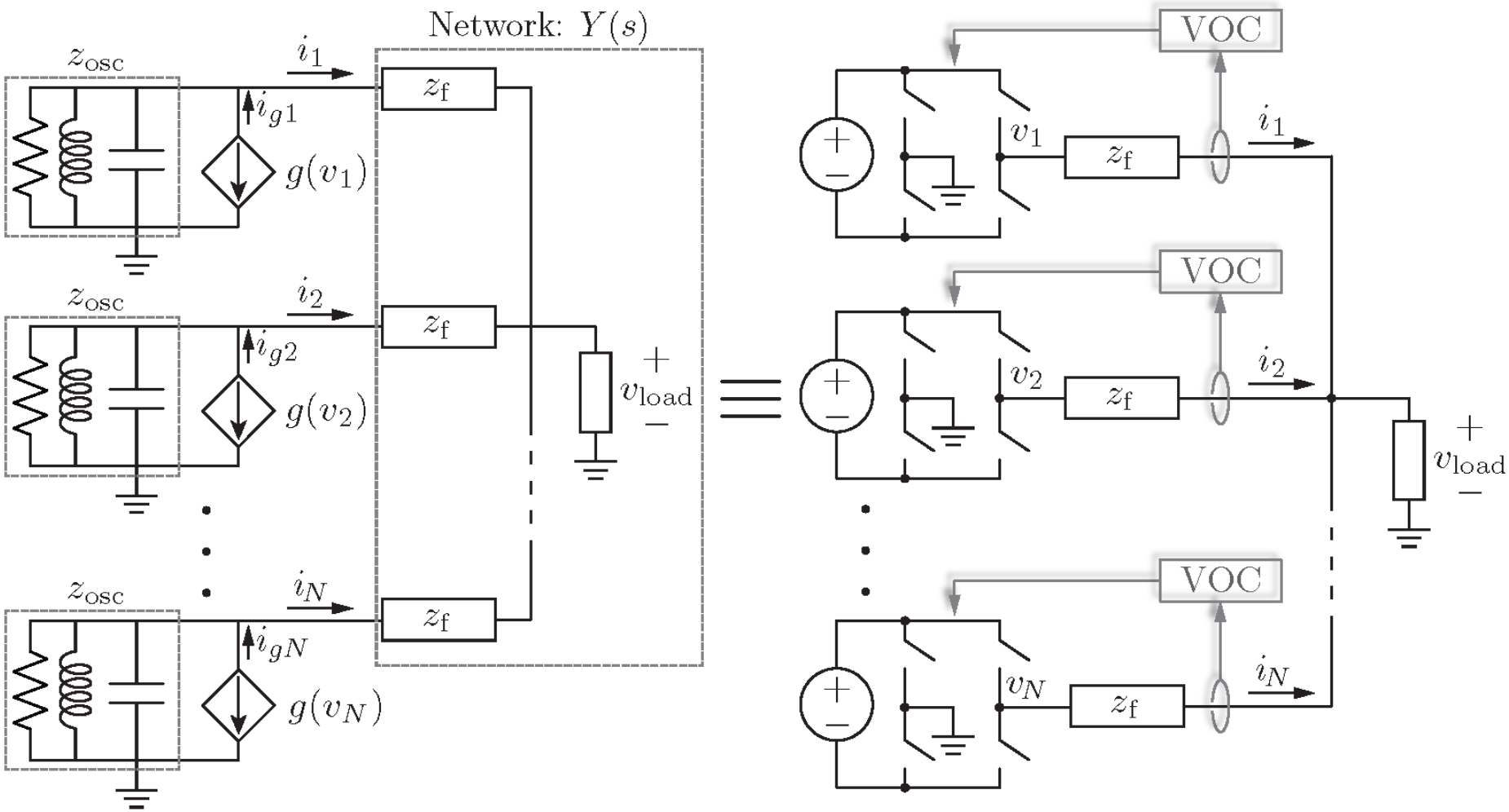

Establishing Conditions for Synchronization

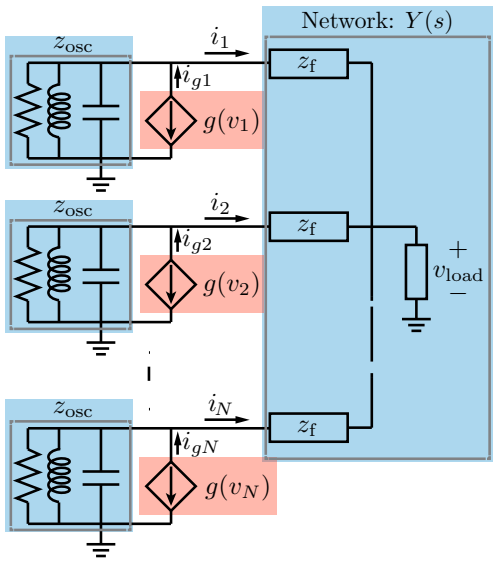

1. Compartmentalize linear and nonlinear subsystems

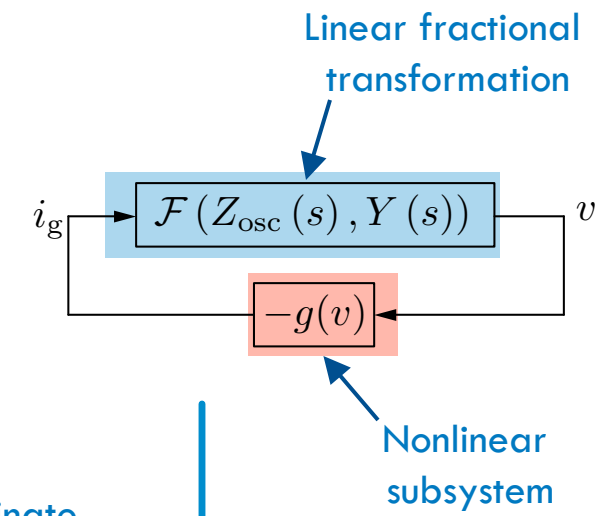

2. Perform coordinate transformation

multiply by Π

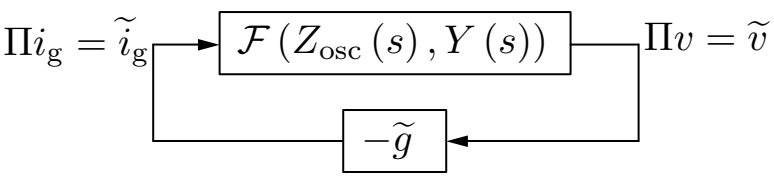

3. Prove stability

$$\text{loop gain} < 1 \implies \text{synchronization}$$

Condition for Synchronization

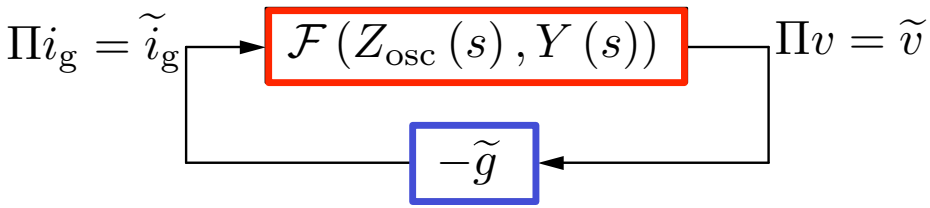

- Sufficient condition for synchronization

$$\sup_{\omega \in \mathbb{R}} \left\| \frac{z_{\mathrm{f}}(\mathrm{j}\omega) z_{\mathrm{osc}}(\mathrm{j}\omega)}{z_{\mathrm{f}}(\mathrm{j}\omega) + z_{\mathrm{osc}}(\mathrm{j}\omega)} \right\|_2 \sigma < 1 \implies \lim_{t \to \infty} \widetilde{v}(t), \widetilde{i}_g(t) = \mathbf{0},$$

1) Compartmentalize linear and nonlinear
2) Perform coordinate transformation
3) Prove stability

B. Johnson, S. Dhople, A. Hamadeh, and P. Krein, "Synchronization of nonlinear oscillators in an LTI electrical network," *IEEE Transactions on Circuits and Systems*, 2014.

Time-Domain Experimental Results

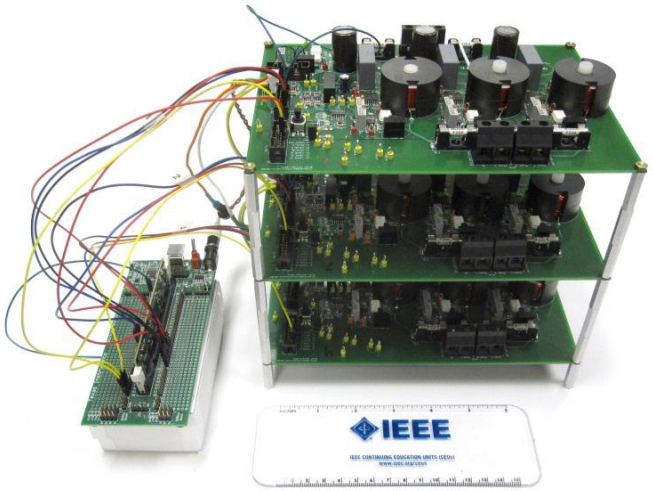

Multi-Inverter Experimental Setup

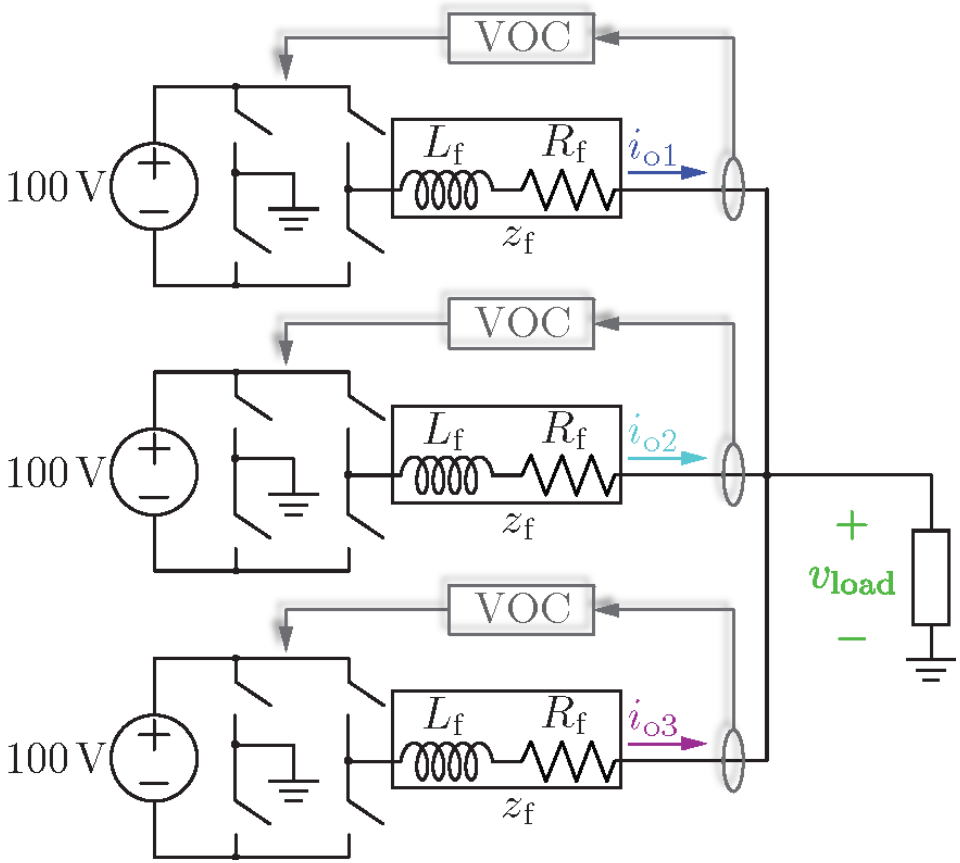

- Various loads
- System parameters

$V_{rms} = 60\,V$

$f = 60\,Hz$

- Chose virtual oscillator parameters such that

$$\left\| \mathcal{F}\left(z_{osc}(j\omega), z_f^{-1}(j\omega)\right) \right\|_\infty \sigma = 0.77 < 1 \implies \text{synchronization}$$

B. Johnson, S. Dhople, A. Hamadeh, and P. Krein, "Synchronization of parallel single-phase inverters with virtual oscillator control," *IEEE Transactions on Power Electronics*, 2014.

Resistive Load (2:2:1 Sharing)

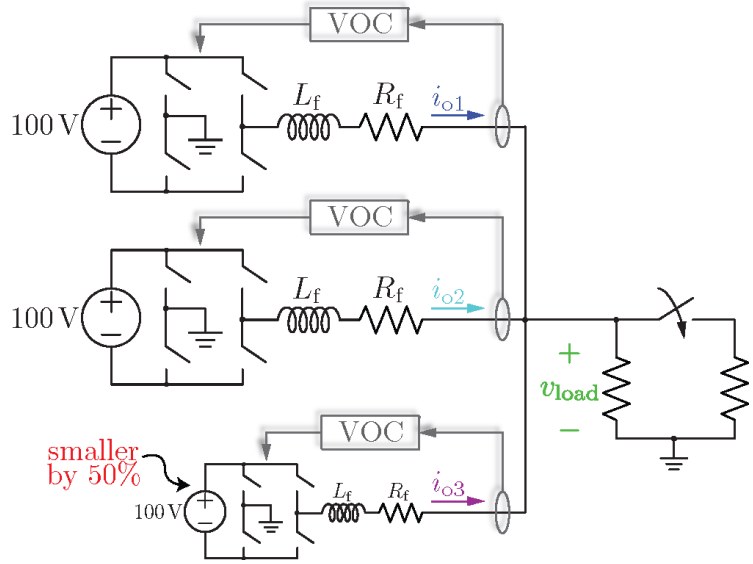

experiment

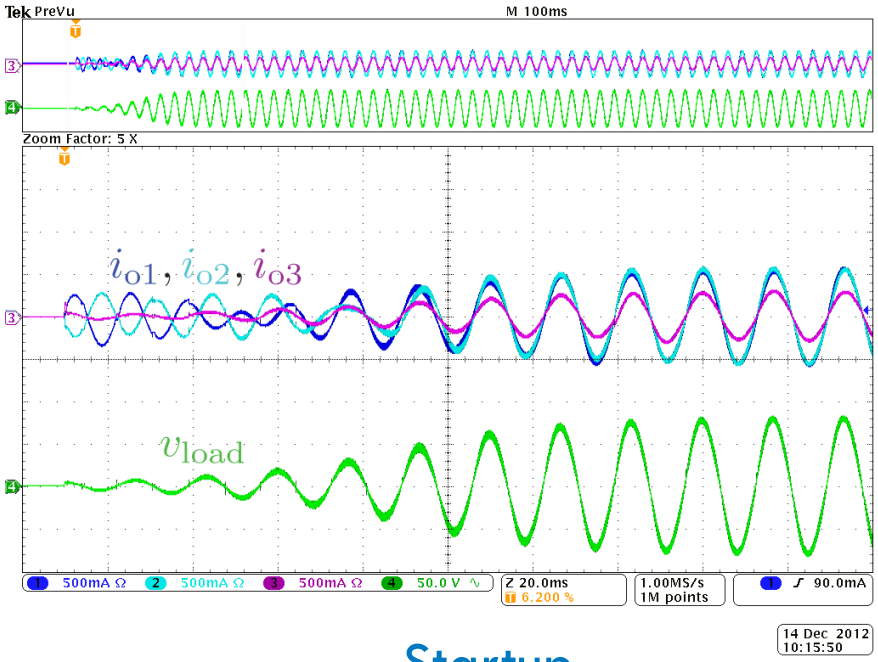

Startup

experiment

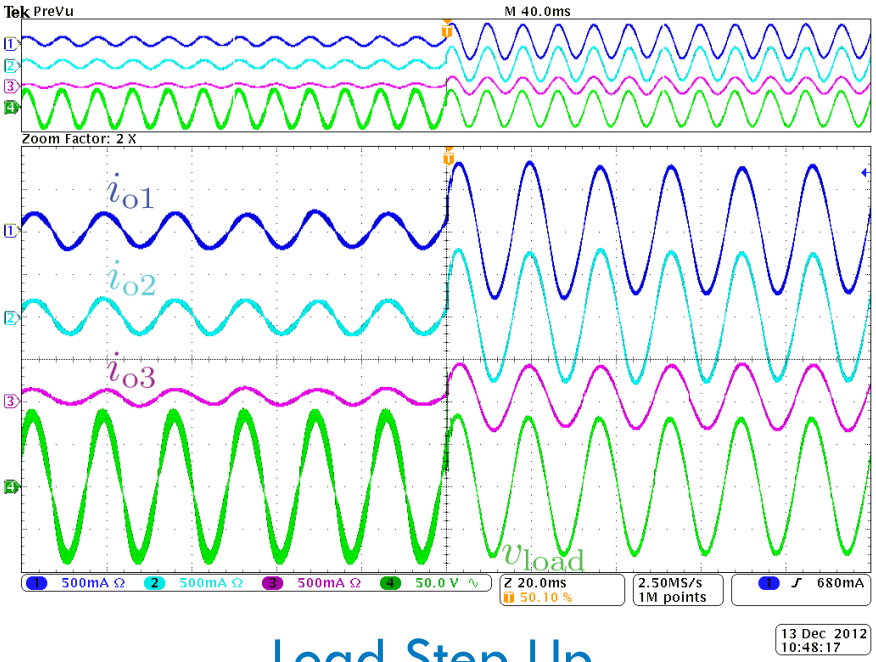

Load Step Up

Nonlinear Load & Inverter Add/Remove

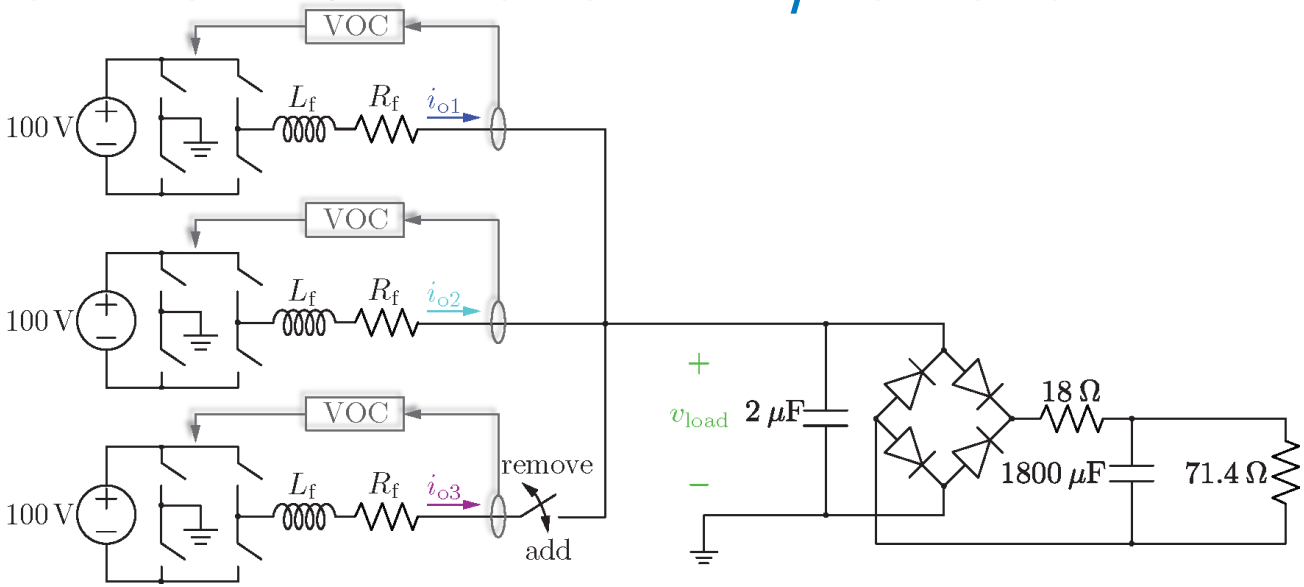

experiment

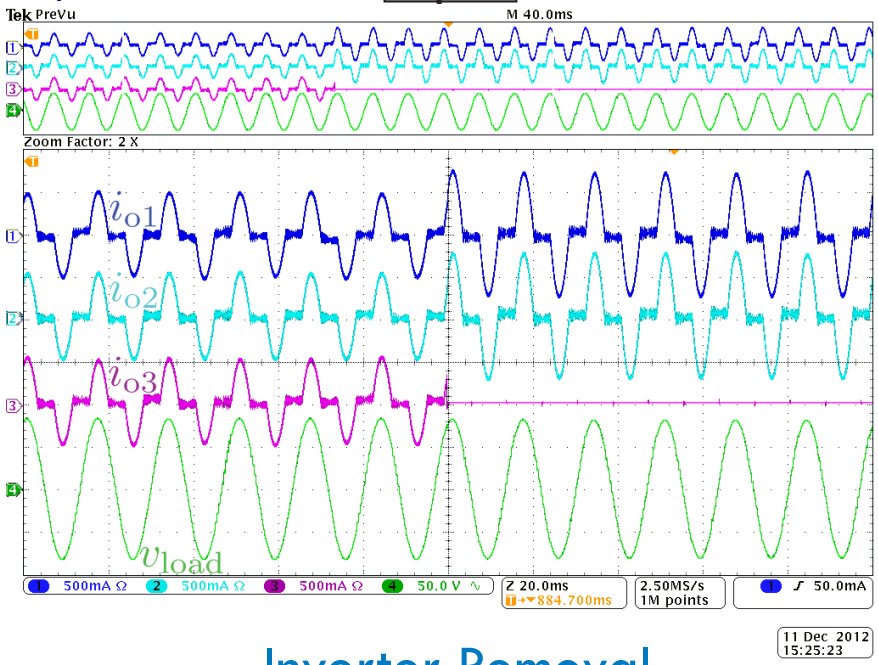

Inverter Removal

experiment

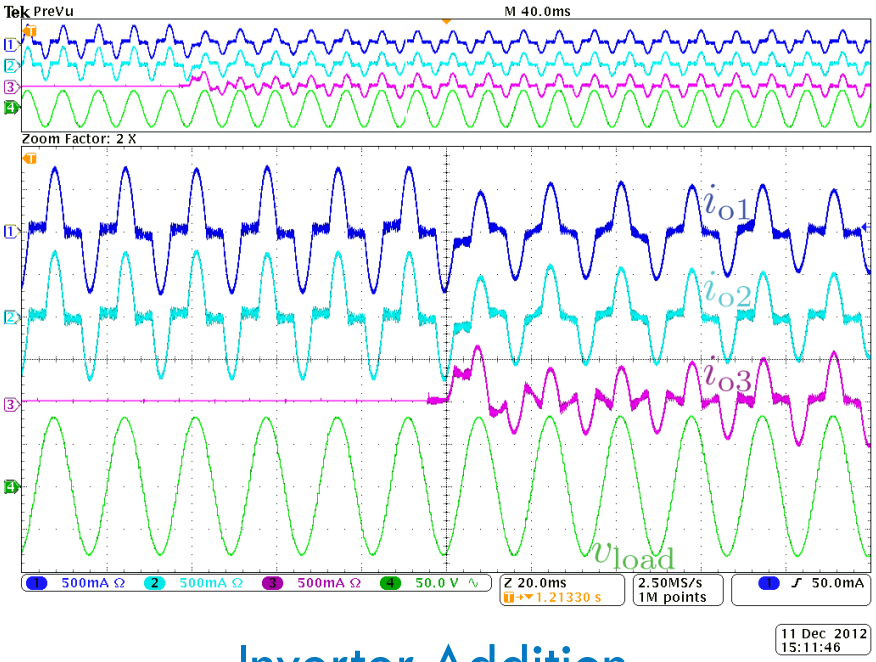

Inverter Addition

Recent Extensions

- Three phase systems[1]

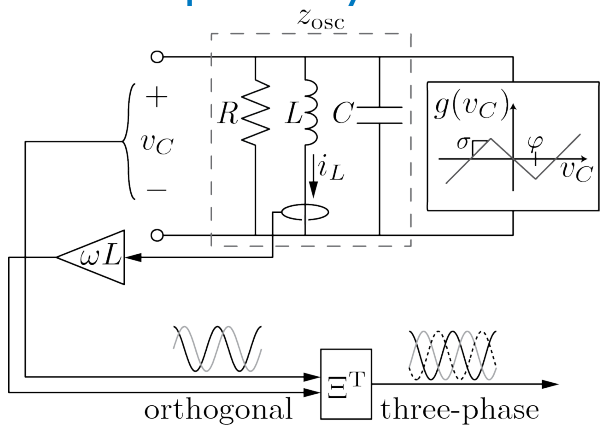

- Arbitrary network structures[2]

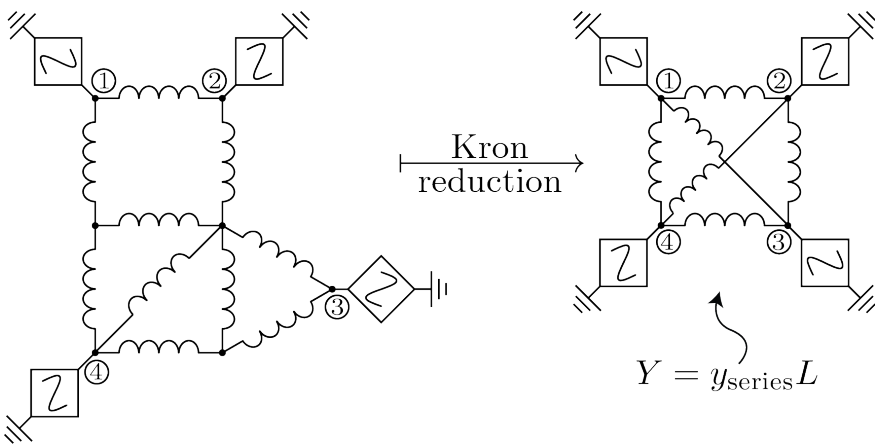

- Systems with renewables[1]

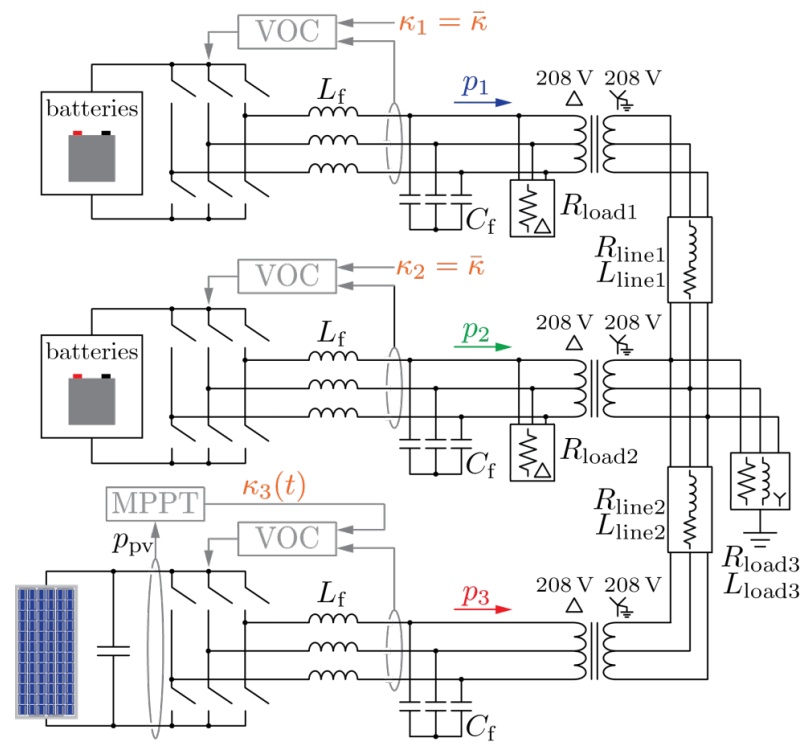

[1] **B. Johnson**, S. Dhople, J. Cale, A. Hamadeh, P. Krein, "Oscillator-based control for islanded three-phase microgrids," *IEEE Journal of Photovoltaics*, 2014.

[2] S. Dhople, **B. Johnson**, F. Dörfler, A. Hamadeh, "Synchronization of nonlinear circuits in dynamic electrical networks with general topologies," *IEEE Transactions on Circuits and Systems*, 2014.

What is Next?

Evolution of the Grid

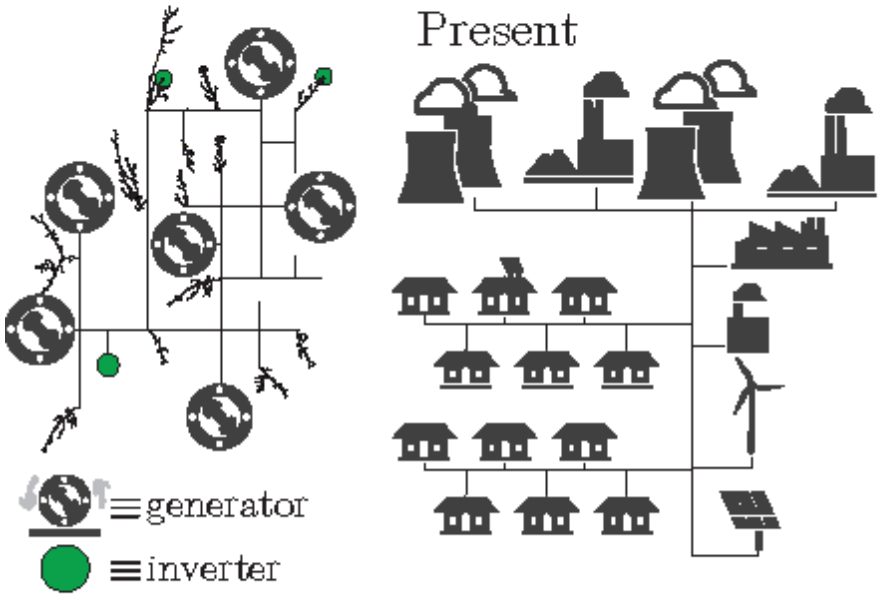

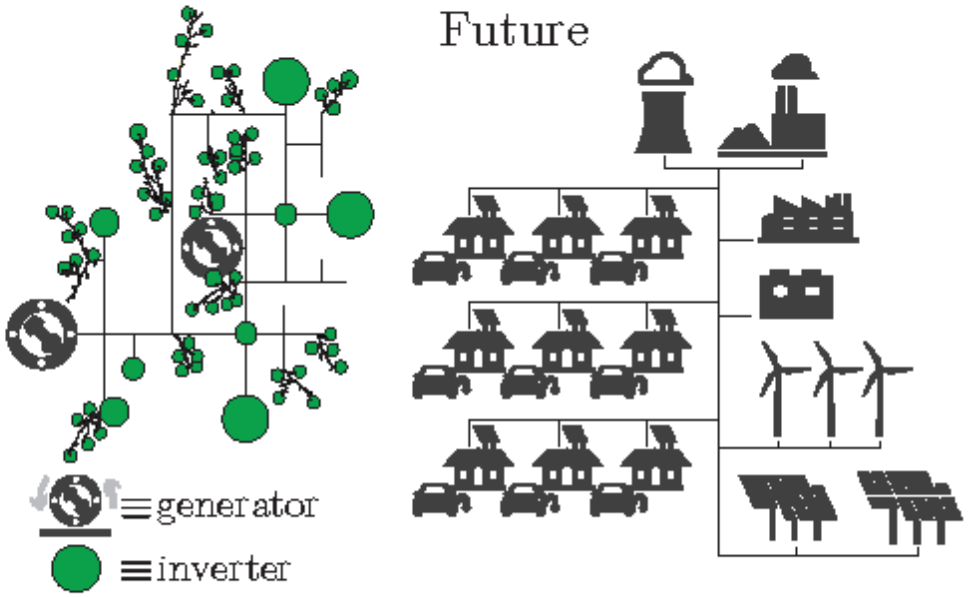

Evolution of the Grid

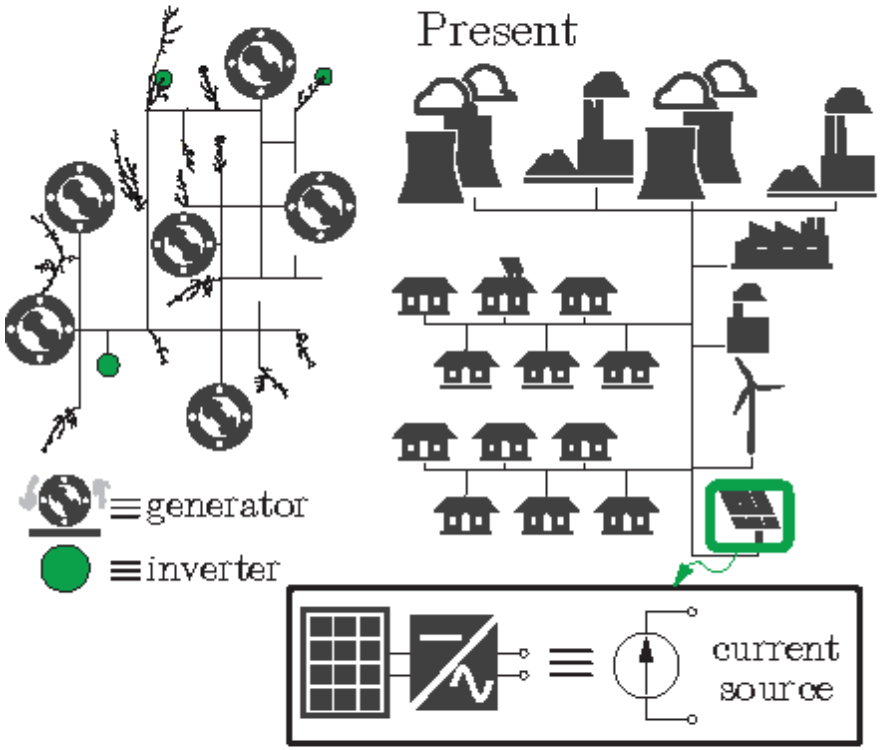

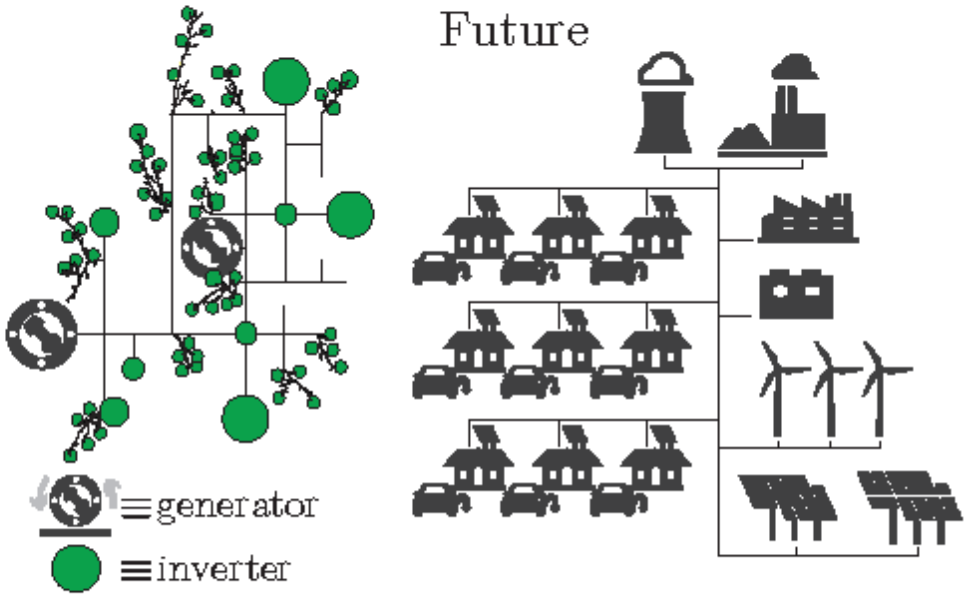

Evolution of the Grid

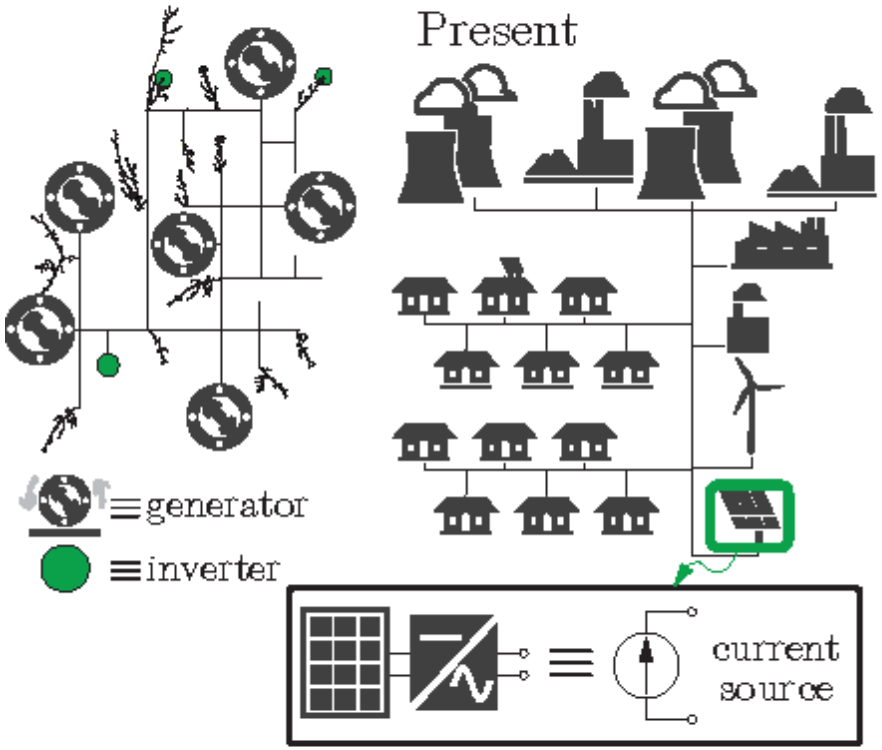

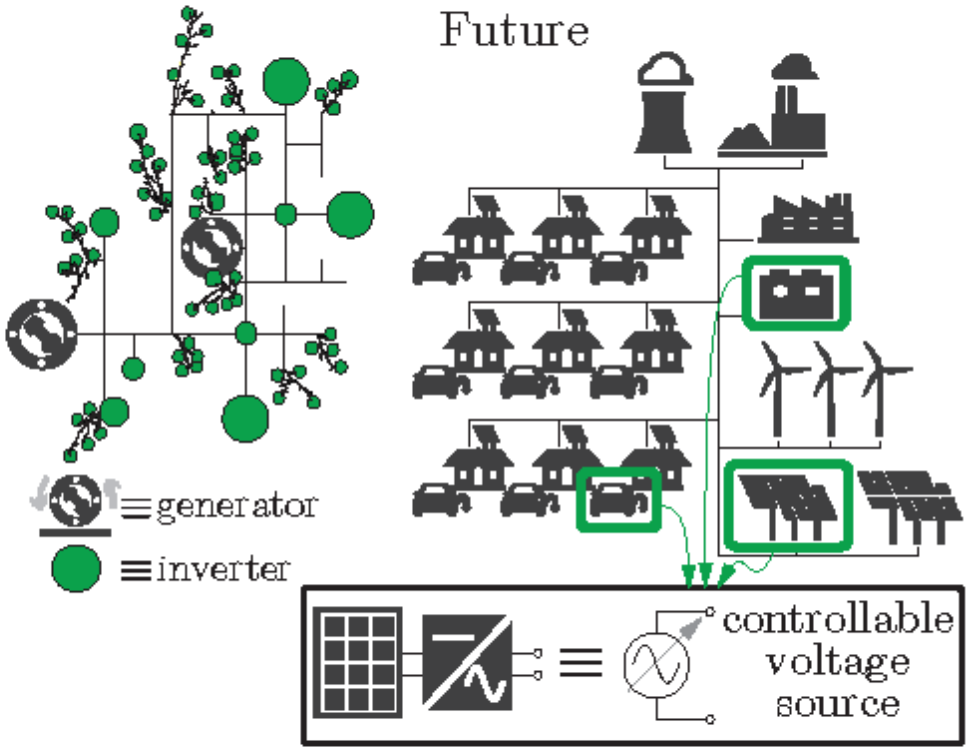

From grid-following controls

→

To next-generation grid-forming controls

A New DOE-Funded Project

ARDUINO

NREL
NATIONAL RENEWABLE ENERGY LABORATORY

Analysis & Design

$$\widetilde{\gamma}\left(\mathcal{F}\left(Z_{\text{osc}}(s), Y(s)\right)\right) = \widetilde{\gamma}\left(\mathcal{F}\left(\zeta(s)I, \beta(s)\Gamma\right)\right)$$
$$= \left\|\mathcal{F}\left(\zeta(s)I, \beta(s)\Gamma\right)\right\|_\infty$$
$$= \sup_{\omega\in\mathrm{R}} \frac{\left\| \left(I + \zeta(\mathrm{j}\omega)\beta(\mathrm{j}\omega)\Gamma\right)^{-1} \zeta(\mathrm{j}\omega)\widetilde{i}_{\mathrm{g}}(\mathrm{j}\omega) \right\|_2}{\|\widetilde{i}_{\mathrm{g}}(\mathrm{j}\omega)\|_2}$$
$$= \sup_{\omega\in\mathrm{R}} \frac{\left\|Q\left(I + \zeta(\mathrm{j}\omega)\beta(\mathrm{j}\omega)\Lambda\right)^{-1} \zeta(\mathrm{j}\omega)Q^{\mathrm{T}}\widetilde{i}_{\mathrm{g}}(\mathrm{j}\omega)\right\|_2}{\|Q^{\mathrm{T}}\widetilde{i}_{\mathrm{g}}(\mathrm{j}\omega)\|_2}$$

UNIVERSITY OF CALIFORNIA SANTA BARBARA

NREL
NATIONAL RENEWABLE ENERGY LABORATORY

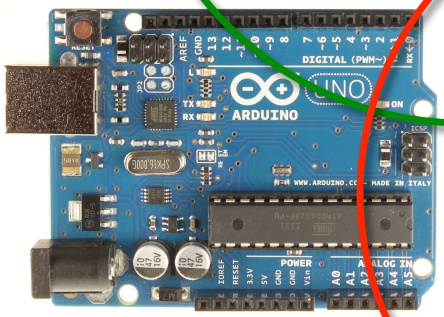

Hardware Development

Tech to Market

ARDUINO

Schneider Electric

Hawaiian Electric

SUNPOWER

Rte

Industry Advisory Board

Powered by SunShot
U.S. Department of Energy

Thank you for your attention!

Tunable Droop Relations

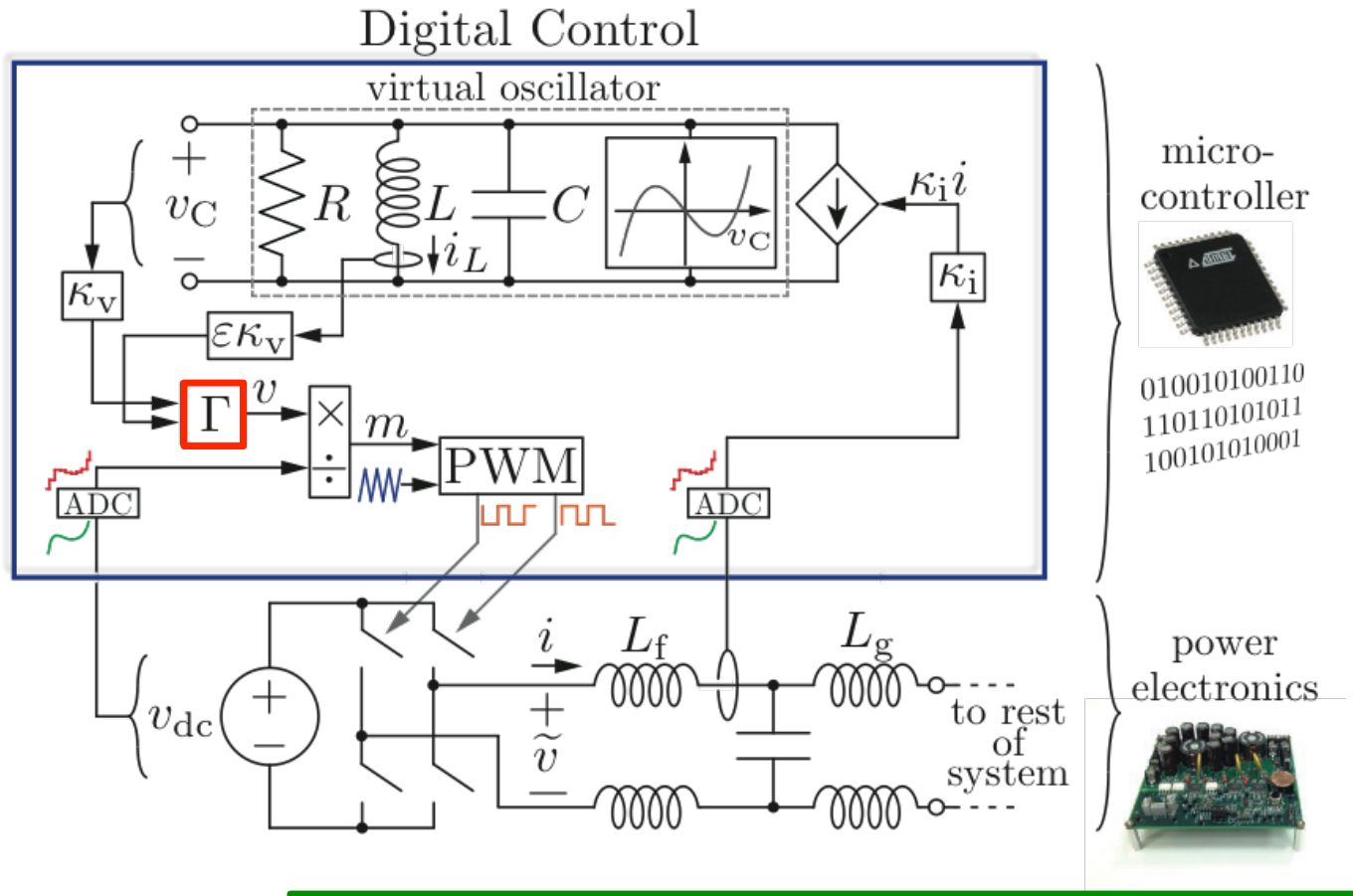

- 2-D rotation

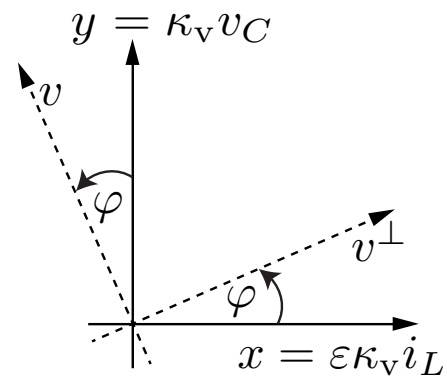

- Rotation matrix

$$\Gamma = \begin{bmatrix} \cos(\varphi) & \sin(\varphi) \\ -\sin(\varphi) & \cos(\varphi) \end{bmatrix}$$

when $\varphi = \dfrac{\pi}{2} \implies$

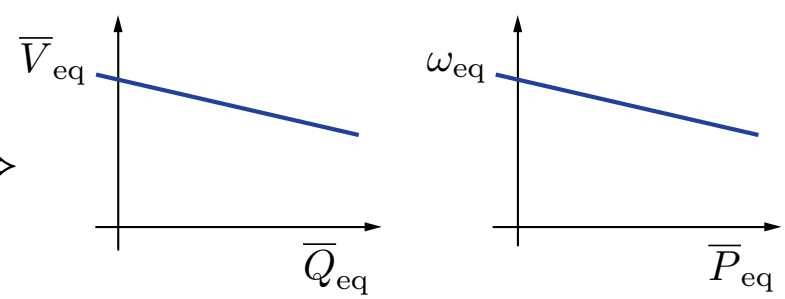

Ongoing Experiments

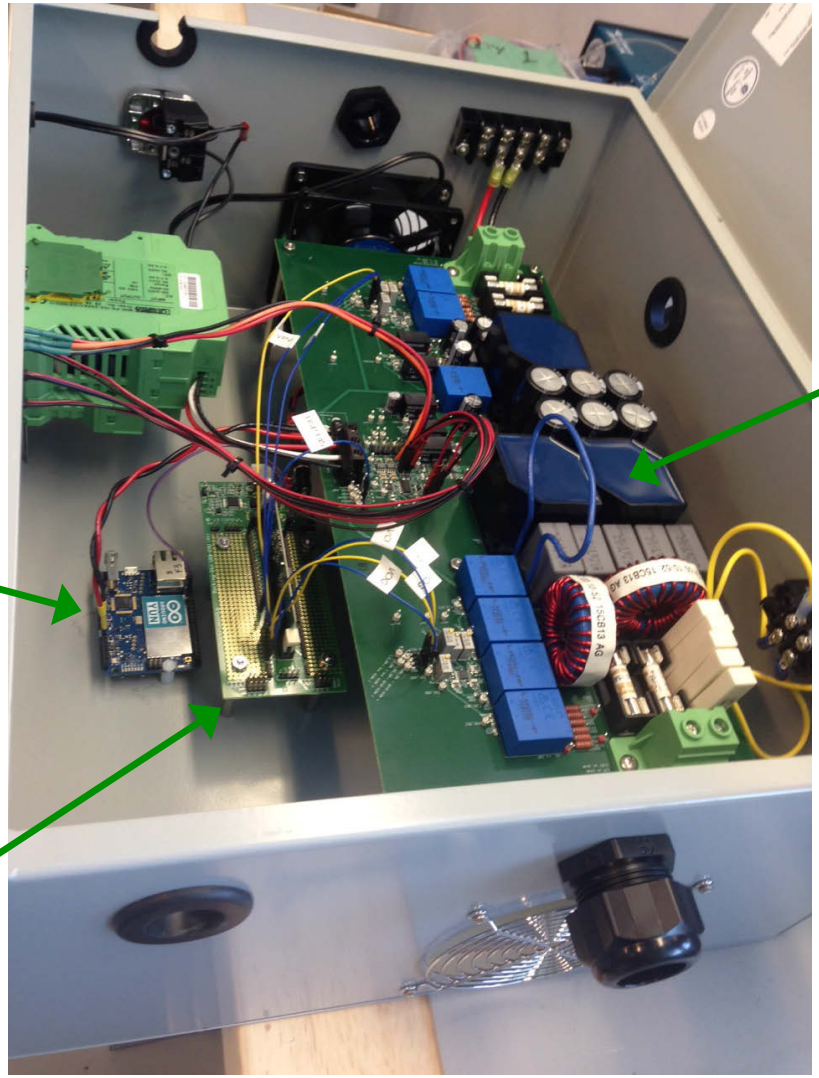

Power electronics

Communications

Microcontroller for switch-level control