Microgrid Controller Requirements and Relationship with DMS

Dr. Arindam Maitra EPRI

Advanced Grid Technologies Workshop Series, NREL
July 7-9th, 2015

© 2015 Electric Power Research Institute, Inc. All rights reserved.

Microgrid Controller Vendor Space

- ABB
- Alstom
- Scheinder
- GE
- Siemens
- Eaton
- SEL
- Raytheon

- Lockheed Martin
- Spirae
- Iperc
- Etap
- Smart Grid Solutions
- Power Analytics
- Pareto Energy

- LBNL
- ORNL

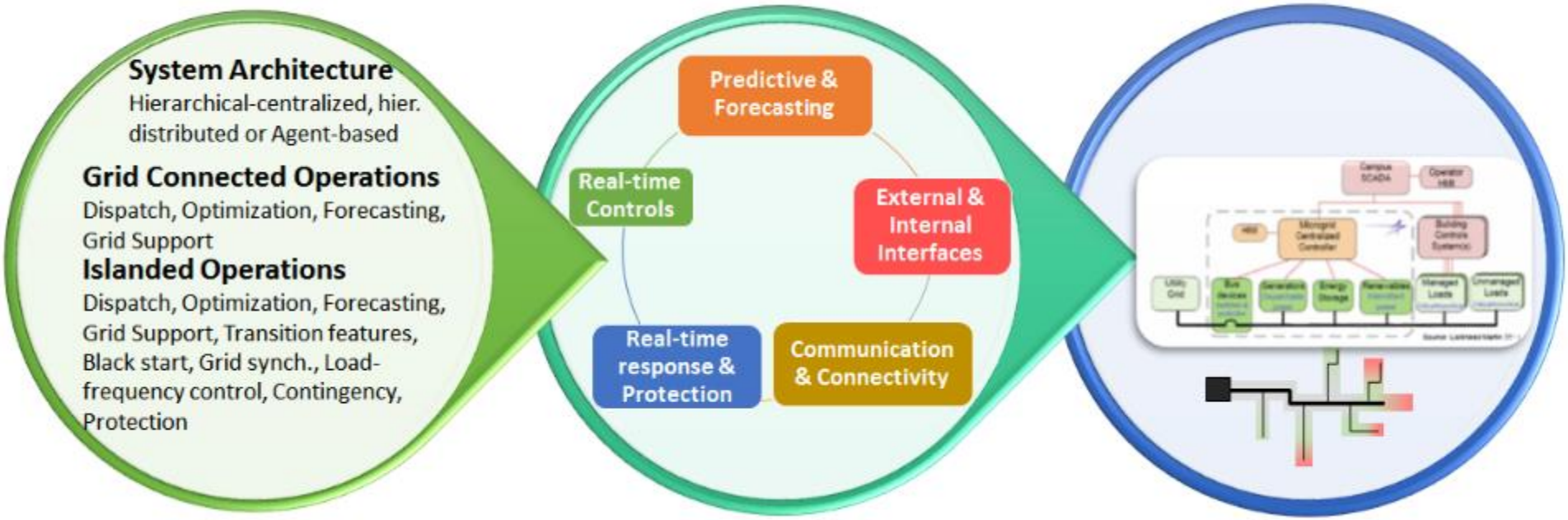

© 2015 Electric Power Research Institute, Inc. All rights reserved.

EPRI ELECTRIC POWER RESEARCH INSTITUTE

Microgrid Controller Development

Microgrid Controller (MC) and DER
MC and DERMS
Microgrid Controller and DMS
Understand Vendor Offerings

Extract functionality
Identify interfaces
Test vendor capabilities
Identify communication protocols
Align with architecture

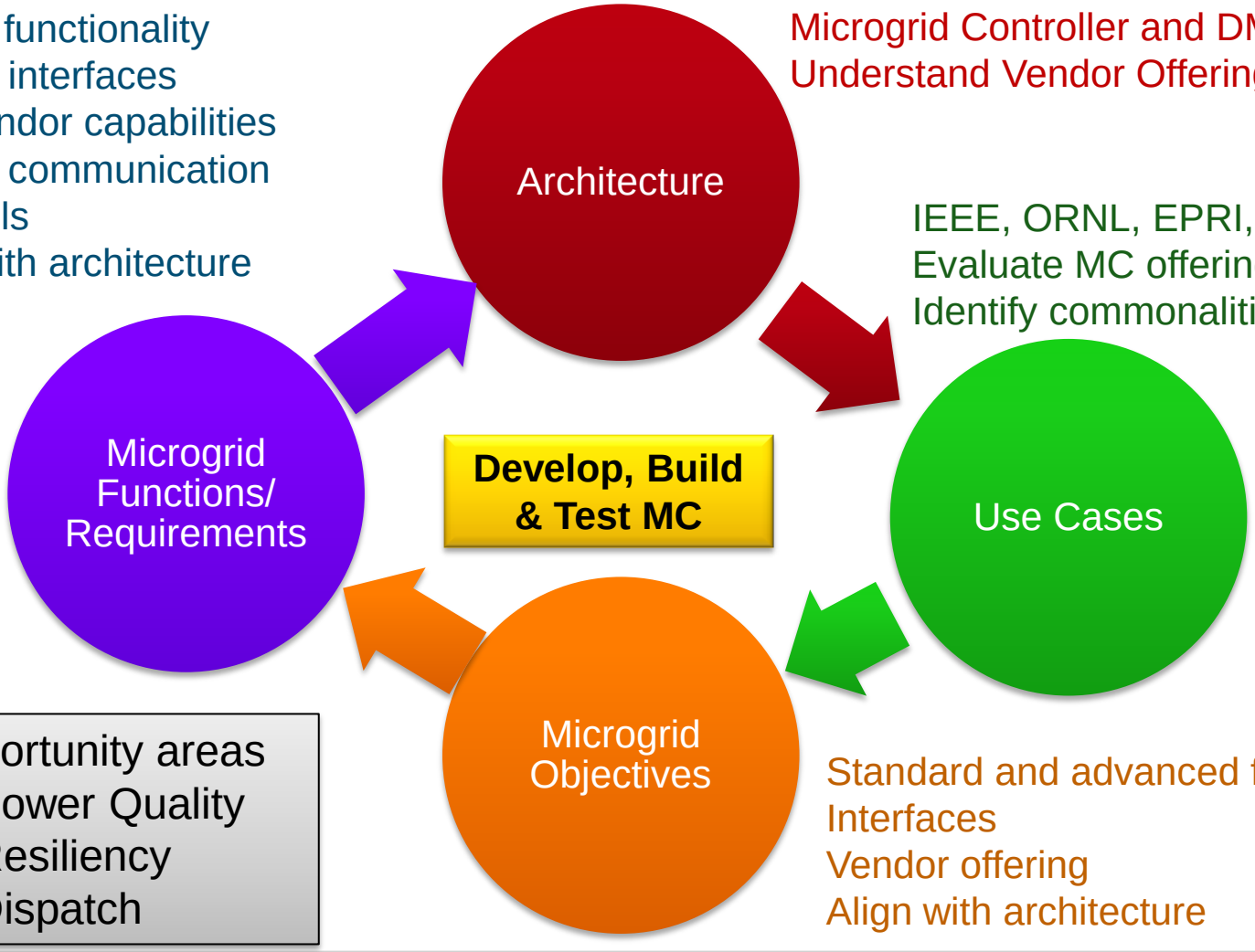

IEEE, ORNL, EPRI, NIST PAP24, etc
Evaluate MC offerings from vendors
Identify commonalities & gaps

Standard and advanced functions
Interfaces
Vendor offering
Align with architecture

Opportunity areas
- Power Quality
- Resiliency
- Dispatch

© 2015 Electric Power Research Institute, Inc. All rights reserved.

Flexible Architectures for Grid Support and Islanded Operations

Level of Control →

Communication System Performance ↓

	Fixed, Out of the Box	Locally Configured	Monitoring	Loosely Coupled, Autonomous Commands (local V & F)	Tightly Coupled, Immediate Commands
No Communication	✓				
Onsite Communication Only		✓			
One Way to Utility			✓		
One Way to DER				✓	
Two-Way Low Bandwidth			✓	✓	
Two-Way High Bandwidth			✓	✓	✓

© 2015 Electric Power Research Institute, Inc. All rights reserved.

EPRI ELECTRIC POWER RESEARCH INSTITUTE

Layered Microgrid Controller Architecture – from DERs to Grid Interaction

Layer 4 — Analytics / DMS interface / Grid interaction — SW / HW

- Grid interaction / Analytics

Layer 3 — Supervisory / management level controls — SW / HW

- Supervisory controller / Energy manager

Layer 2 — Network / Group /Building level controls — SW / HW

- Sensors
- PLCs RTUs
- Network SCADA
- High speed Load Shedding
- Building Mgmt System

Layer 1 — Device level controls — SW / HW

- Breakers Contactors switches
- Inverters
- Static switch
- Load controller
- Rotary DG control
- Protection devices

Layer 0 — Generation/storage/Load — HW

- PV Wind Micro turbine
- Mid-large sacle rotating machine[2)]
- Battery storage Supercap.
- Critical load
- Non-critical load

© 2015 Electric Power Research Institute, Inc. All rights reserved.

EPRI ELECTRIC POWER RESEARCH INSTITUTE

EPRI-DOE-Enernex Microgrid Use Cases

- General Microgrid Use Cases covering broad range of microgrids
  - Community
  - Campus
  - Facility
- Generation/Storage mix
  - Renewable generation (Campus, Facility)
  - Energy Storage (Campus, Facility)
  - Reciprocating engine (Community)
  - Diesel generators (Campus, Facility, Community)

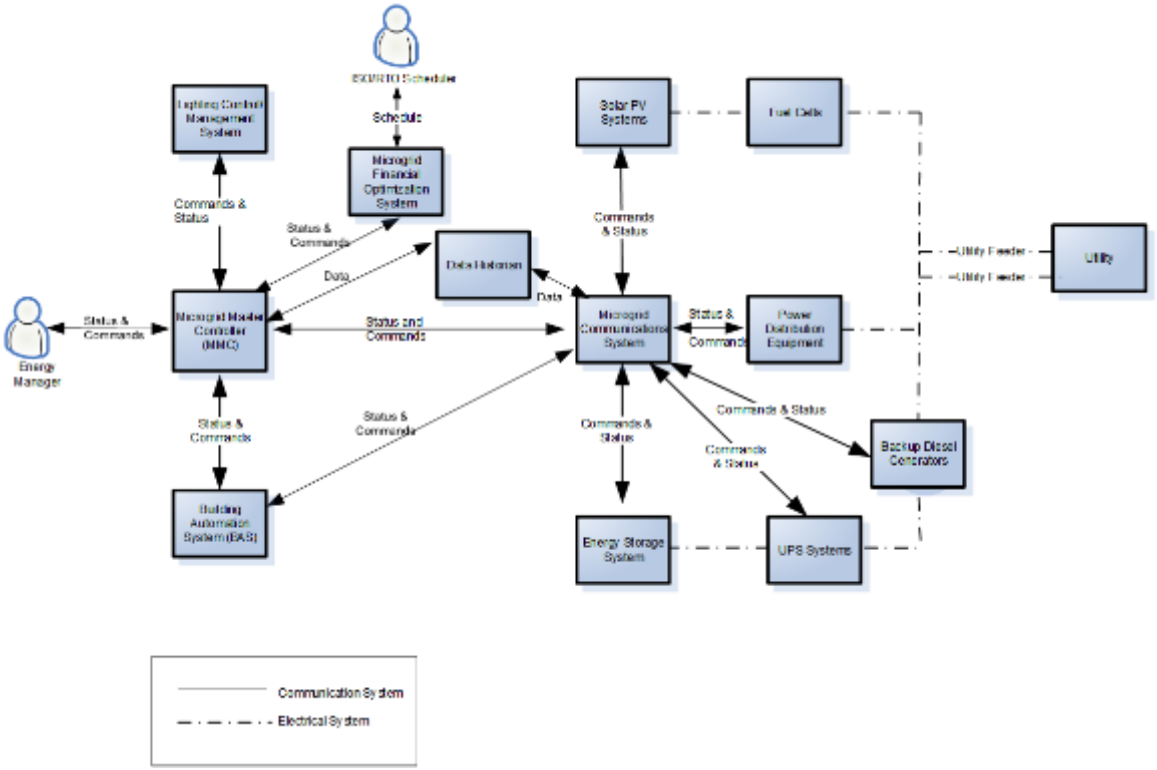

© 2015 Electric Power Research Institute, Inc. All rights reserved.

EPRI DOE Microgrid Use Cases

1. Utility Microgrid Controller Monitors Grid System Status and Exerts Control to Ensure Power Delivery for Critical Facilities (Facility microgrids)
2. Campus Microgrid Supplies Power Following Natural Disaster (Campus and Facility microgrids)
3. Increased Reliability through Distributed Control- Provide High Quality/High Reliability Power for Prioritized Loads (Campus and Facility microgrids)
4. Utility Bills for Community Microgrid Resources (Community microgrids)
5. Utility Tests Community Microgrid (Community microgrids)

© 2015 Electric Power Research Institute, Inc. All rights reserved.

Standards Functions for Integration

Grid Tied Functions:

- Connect/Disconnect – Non Islanding

- Max Generation Level Control
- Power Power Curtailment
- Storage Management
- Power Smoothing

- Volt-VAR Management and PF
- Voltage and Frequency Ride-Through

- Ancillary Services

- State/Status Monitoring
- Event Logging

Islanded Functions:

- Grid-connected to islanding transition (Intentional & unintentional)
- Islanding to grid-connected transition
- Multiple Grid Configurations/Operations

- Energy Management & Dispatch
- Load and Generation Following
- DG & Storage Management
- Power Smoothing
- Load Shedding

- Protection
- Black Start

- Voltage and Frequency Control
- Isochronous/Droop Modes of Operation
- PQ and Reliability
- Voltage regulation
- Dynamic Reactive Current

- User interface and data management
- Additions to State/Status Monitoring

© 2015 Electric Power Research Institute, Inc. All rights reserved.

Typical Functionalities

Layer 4 — Grid interaction / Analytics

Analytics
- Network models
- Model indentification
- FFT prediction

Grid interaction
- ADR to CAISO
- Demand response
- Spinning reserve

Layer 3 — Supervisory control layer

Forecasting
- Load Forecast
- Weather Forecast
- RES Gen. Forecast

Data Management
- Data Logging
- Event Recording
- Report Creation

Optimization
- DER Scheduling
- CHP Coordination
- Real-Time Adjustment

Emergency Handling
- Outage Management
- Fault Monitoring
- Black Start

Others
- PV imaging
- PV smoothing
- Spinning reserve
- AGC/Secondary freq control

Layer 2 — Network level control – PLC

Basic operation
- Data exchange
- Sequence logic

Load curtailment
- Load shedding tables
- Fast load shedding

Network control - relays

Transition functions
- Island detection
- Island entering
- Re-synchronization

Network control - HMI

- Operation
- Data logging
- Alarms/events
- reports

Layer 1 — Device level control layer-local controls

Switching devices
- Physical isolation
- ON/OFF
- Fault clearing

Protection devices
- Fault sensing
- Fault controls
- Re-synchronization

Inverters/VFDs
- Power conversion
- Power control
- V-F control

Device level control layer

Primary freq control
- Inverter droops
- Governor droops

Other controls
- Master V-F
- Island detection
- Re-synchronization

© 2015 Electric Power Research Institute, Inc. All rights reserved.

EPRI ELECTRIC POWER RESEARCH INSTITUTE

Microgrid Controller Interfaces

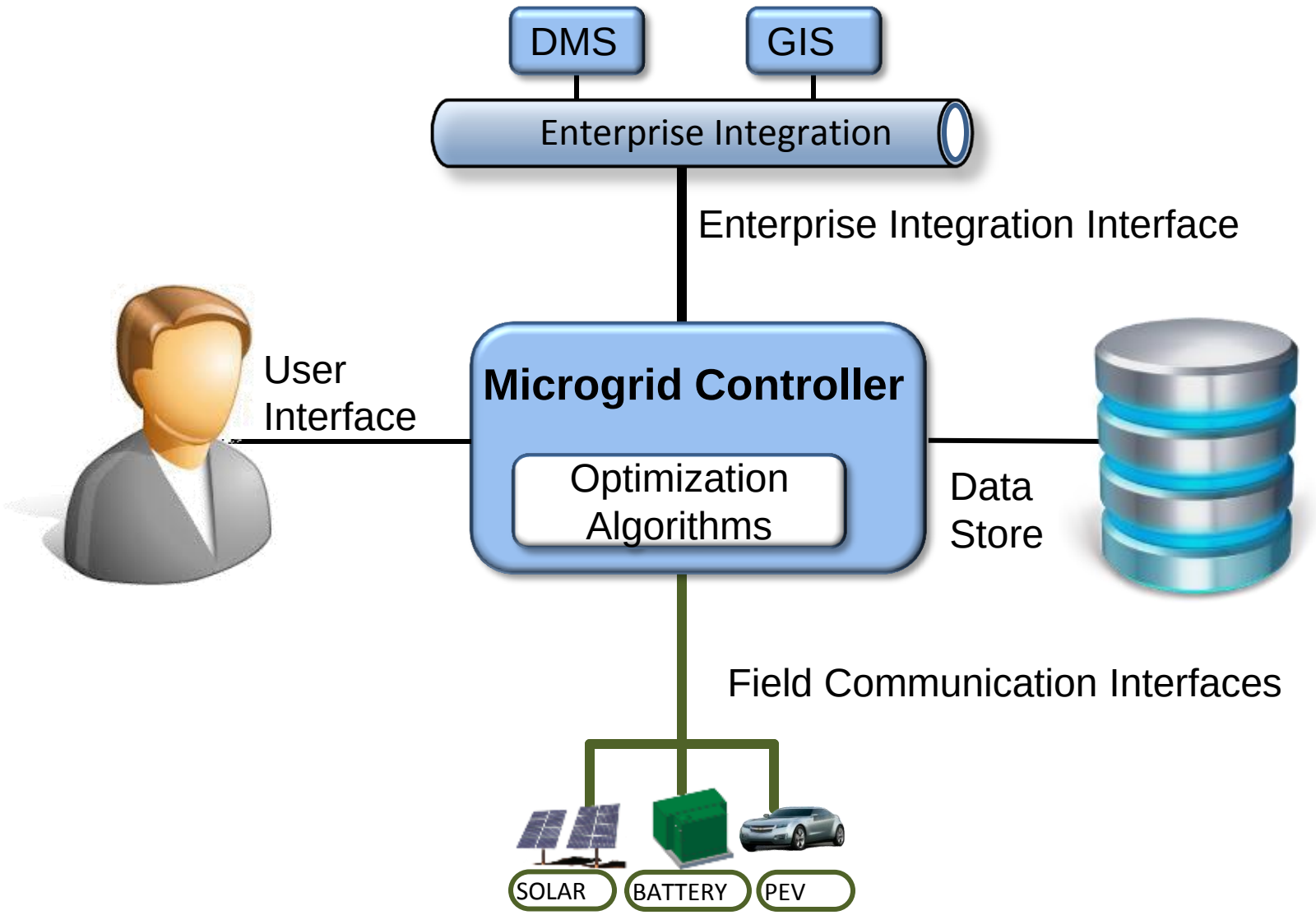

© 2015 Electric Power Research Institute, Inc. All rights reserved.

Different Distribution Feeder Operations

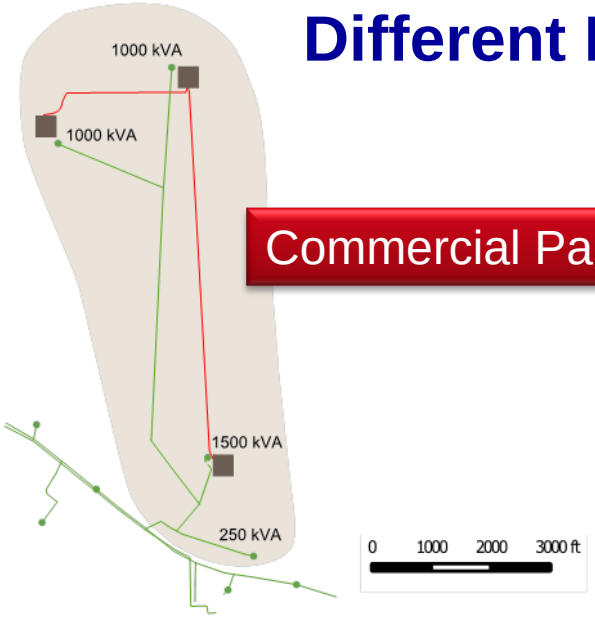

Commercial Park

Campus Style

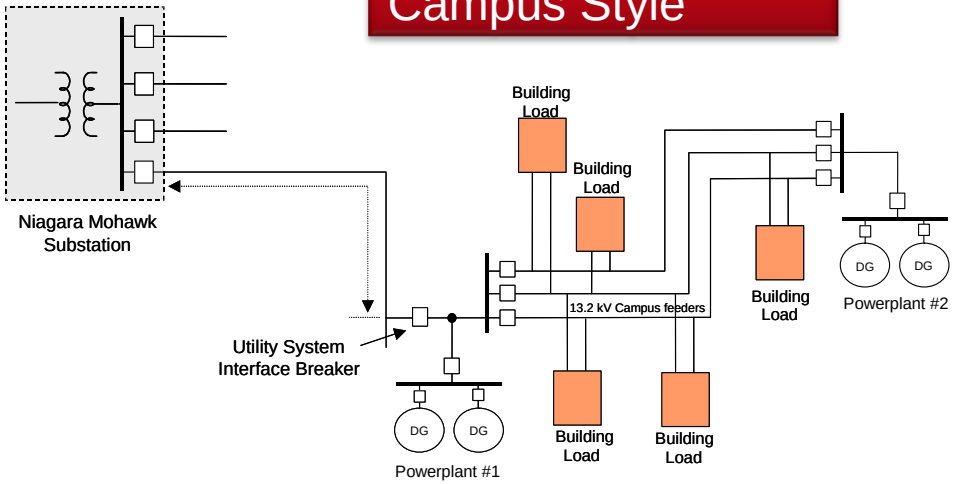

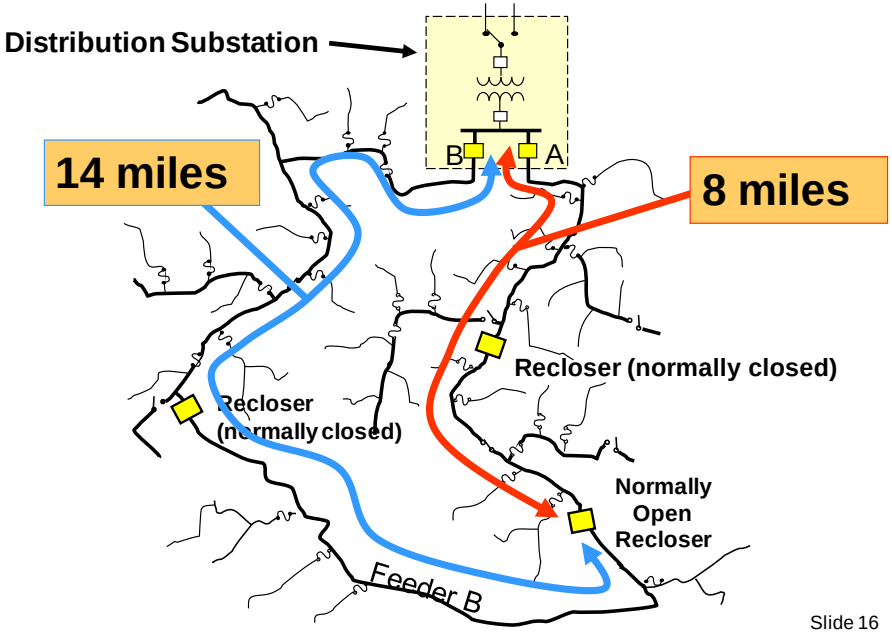

Slide 16

Spot Network

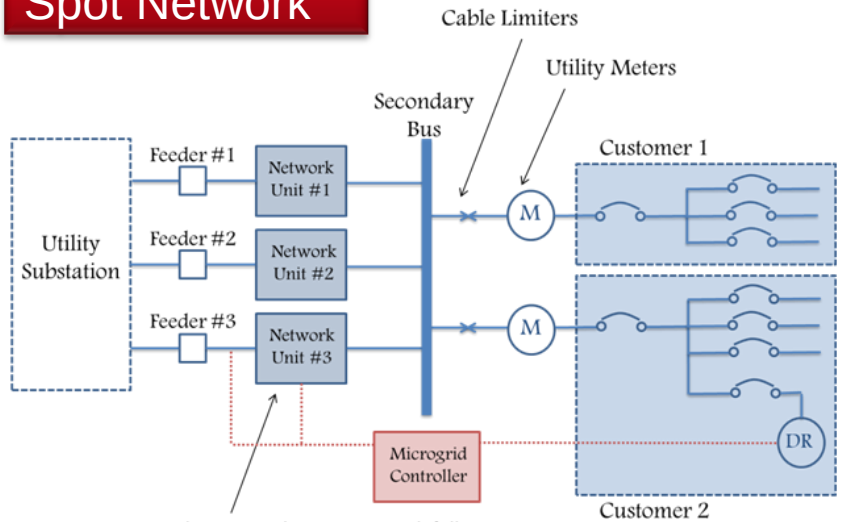

May require upgrading network protectors with full interrupting rating, synchronism capability, and reverse power flow detection. This may be accomplished with a new power circuit breaker and relay package.

Open Loop AC

© 2015 Electric Power Research Institute, Inc. All rights reserved.

A Campus Microgrid System – Identifying the Point of Common Coupling (PCC)

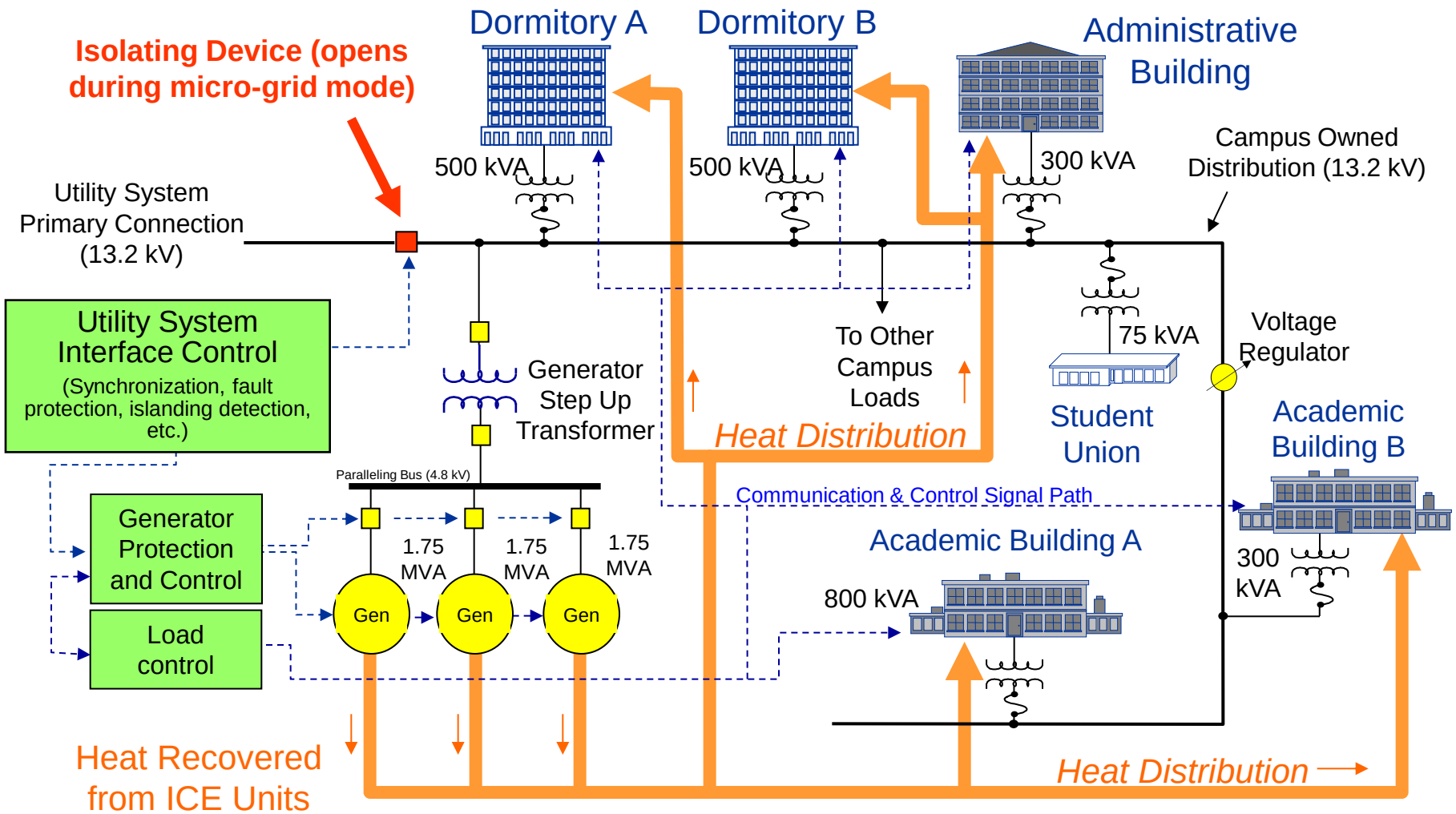

© 2015 Electric Power Research Institute, Inc. All rights reserved.

Multiple Grid Configurations with the Microgrid controller

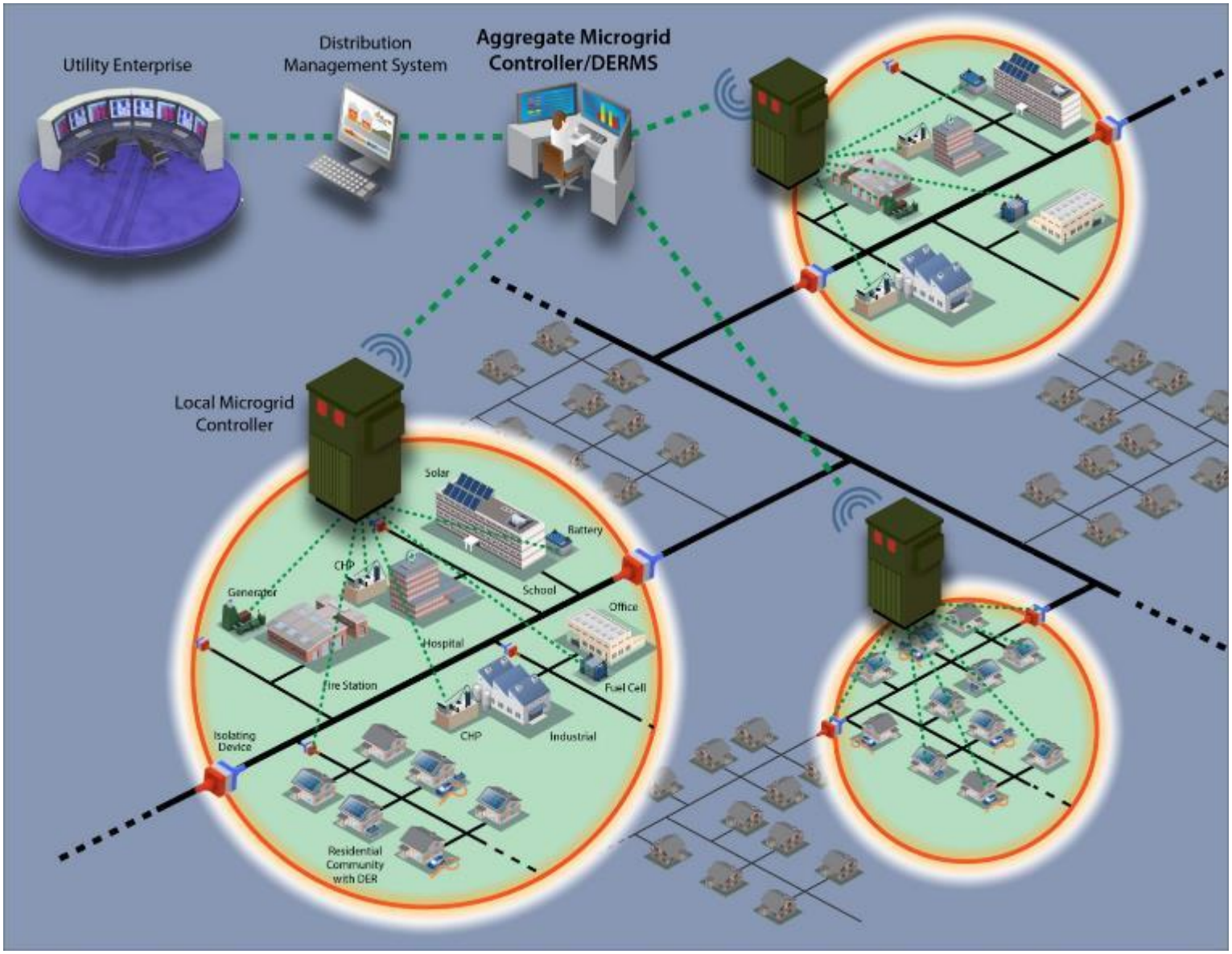

© 2015 Electric Power Research Institute, Inc. All rights reserved.

ELECTRIC POWER RESEARCH INSTITUTE

For a small microgrid: need to understand the load

Daily, from hourly to cycles in single family residence Knoxville, TN

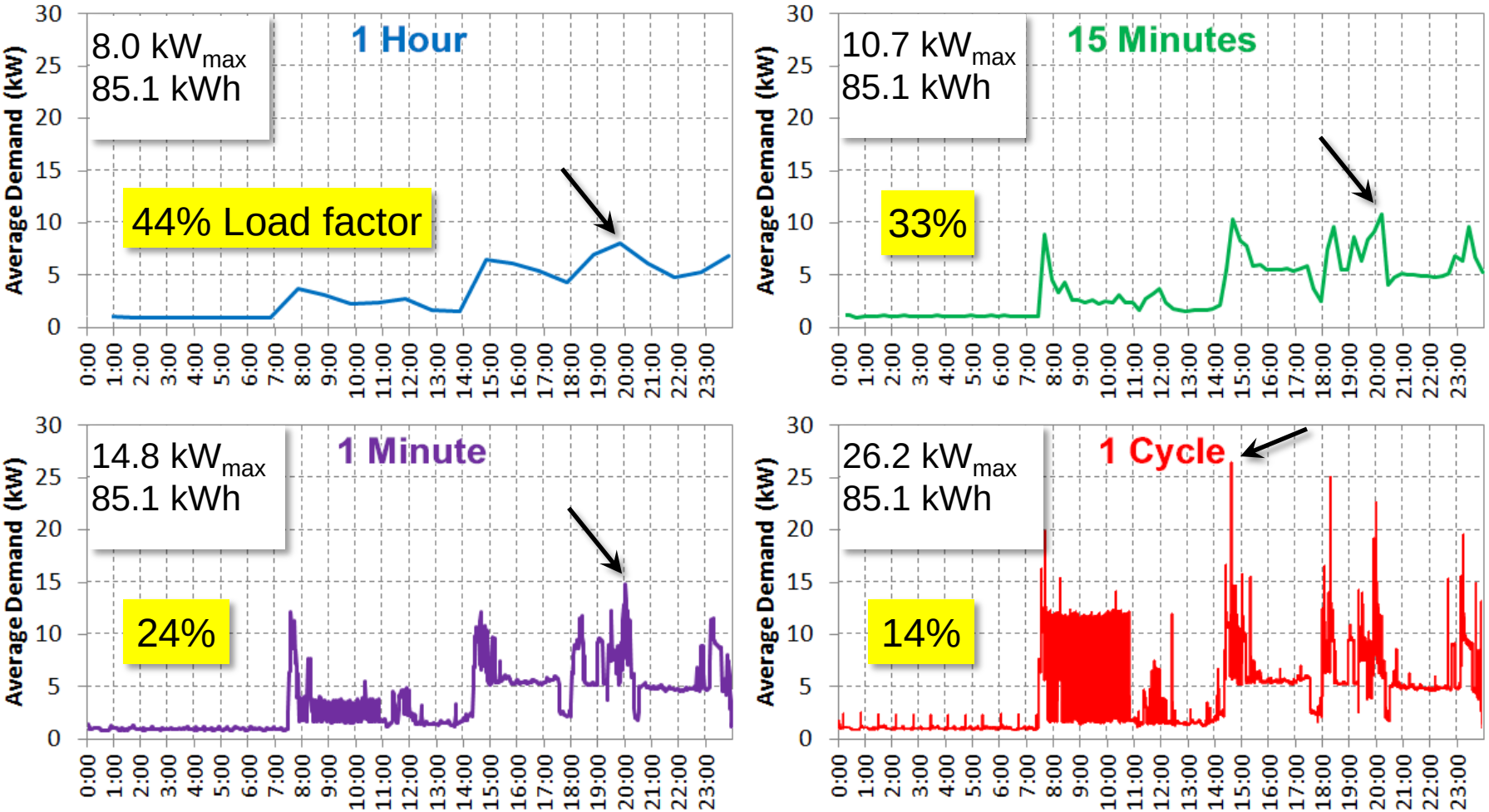

© 2015 Electric Power Research Institute, Inc. All rights reserved.

EPRI ELECTRIC POWER RESEARCH INSTITUTE

Smart Inverter Technology

DC Power ***AC Power***

Traditional Inverter

- Matching PV output with grid voltage and frequency
- Providing safety by providing unintentional islanding protection
- Disconnect from grid based on over/under voltage/frequency

Smart Inverter Functionality

- Voltage Support
- Frequency Support
- Fault Ride Through (FRT)
- Communication with grid

© 2015 Electric Power Research Institute, Inc. All rights reserved.

Distributed Generation and Storage Technologies

Generators

- IC generators
- Industrial gas turbines
- Reciprocating engines
- Micro turbines
- Wind turbines
- Roof top PV
- Fuel cells

Storage Devices

- Flywheels
- Batteries
- Ultra-Capacitors
- Flow Battery

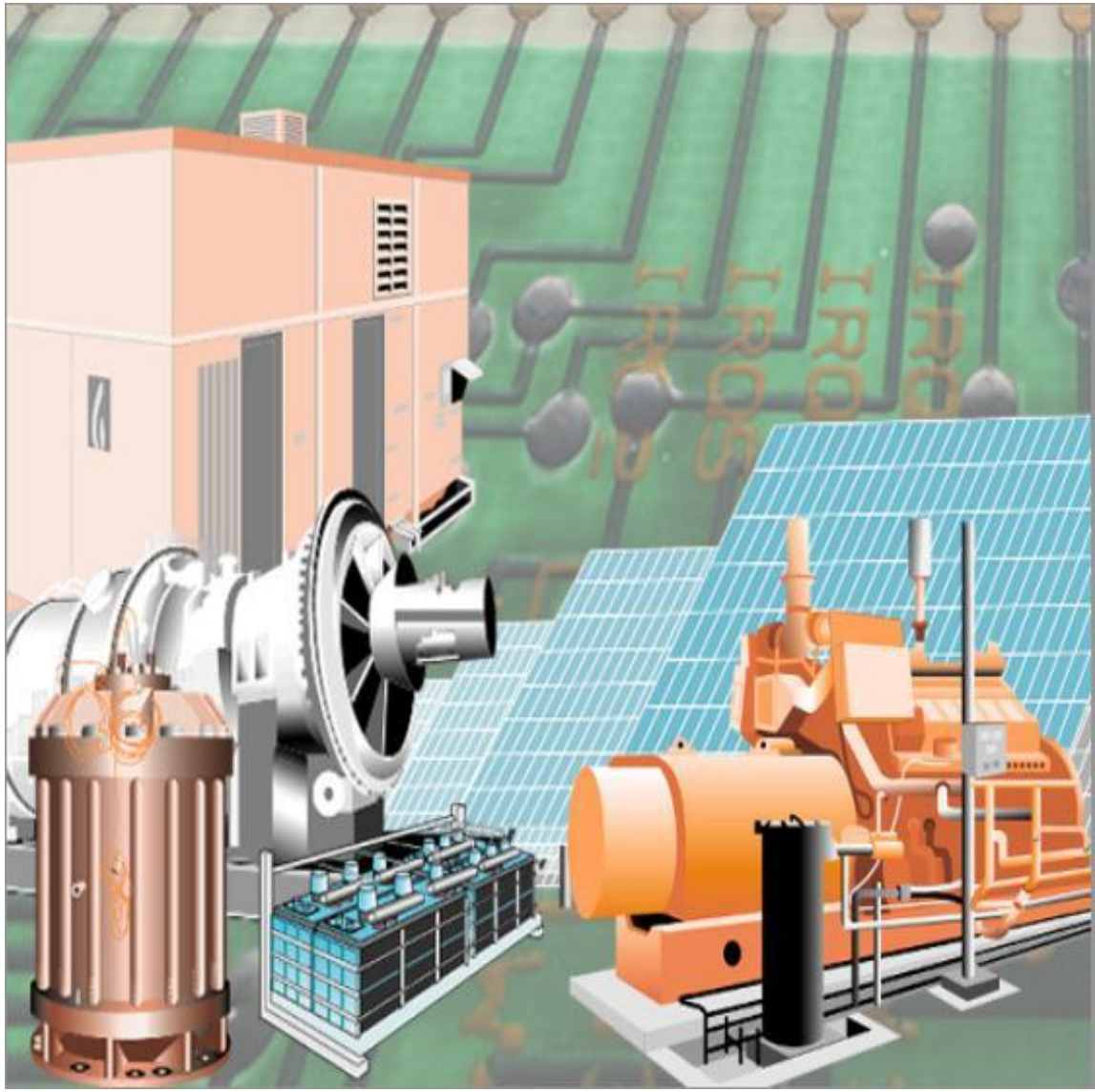

© 2015 Electric Power Research Institute, Inc. All rights reserved.

EPRI ELECTRIC POWER RESEARCH INSTITUTE

Energy Storage Can Play Many Roles

- **Capacity Resource**
  Provide peak demand support to avoid or defer building new traditional G, T, and D assets

- **Flexibility Resource**
  System ramping, dynamic voltage control; support higher renewable penetration

- **Reliability/Resiliency Resource**
  Provide temporary local power for outages

Energy Storage as a Capacity Resource

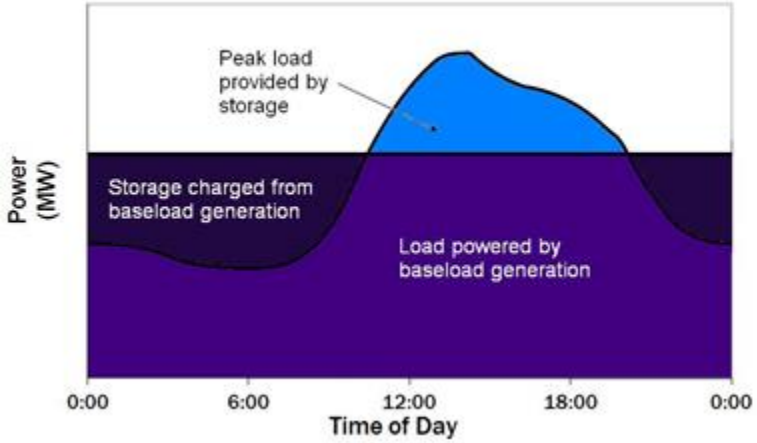

Energy Storage as a Flexibility Resource

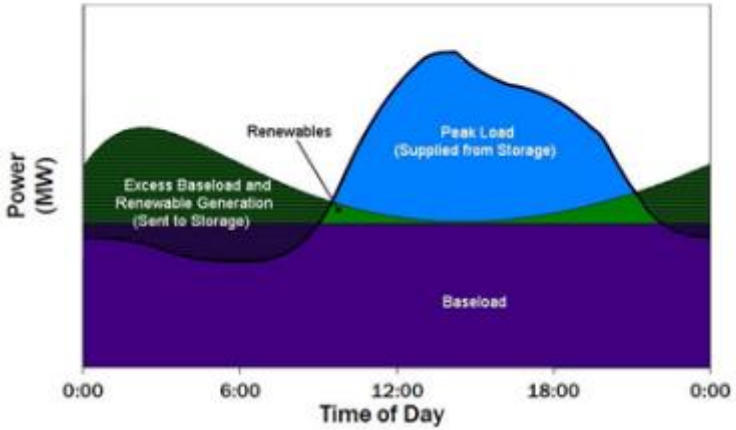

© 2015 Electric Power Research Institute, Inc. All rights reserved.

Inverter settings are Critical

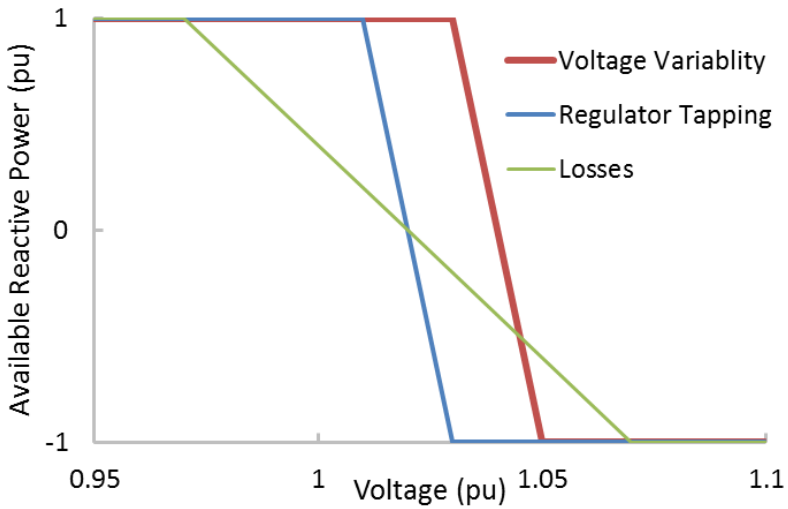

depend on performance objective

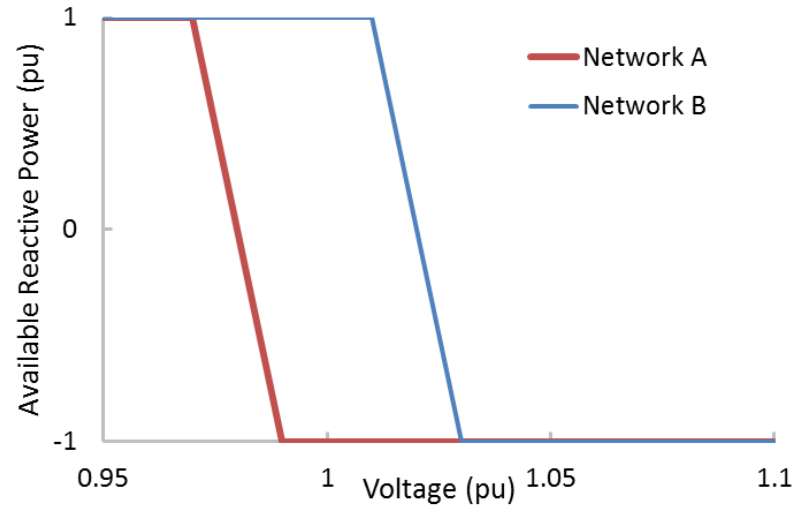

depend on feeder characteristics

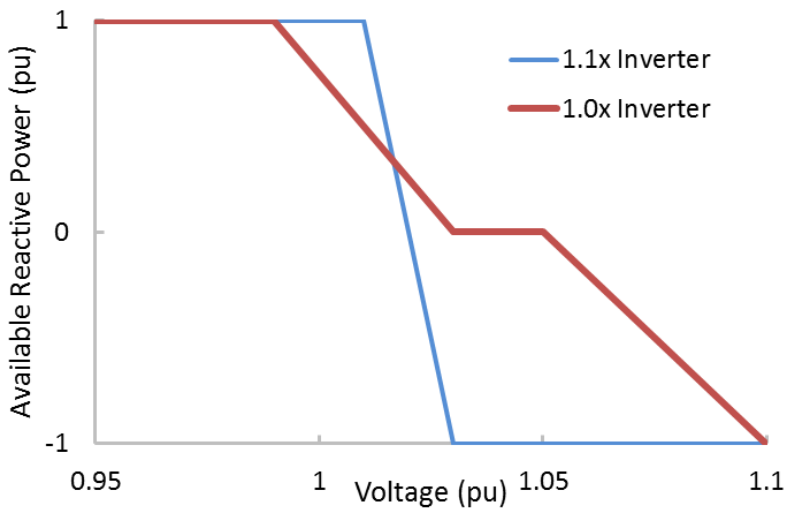

depend on inverter sizing

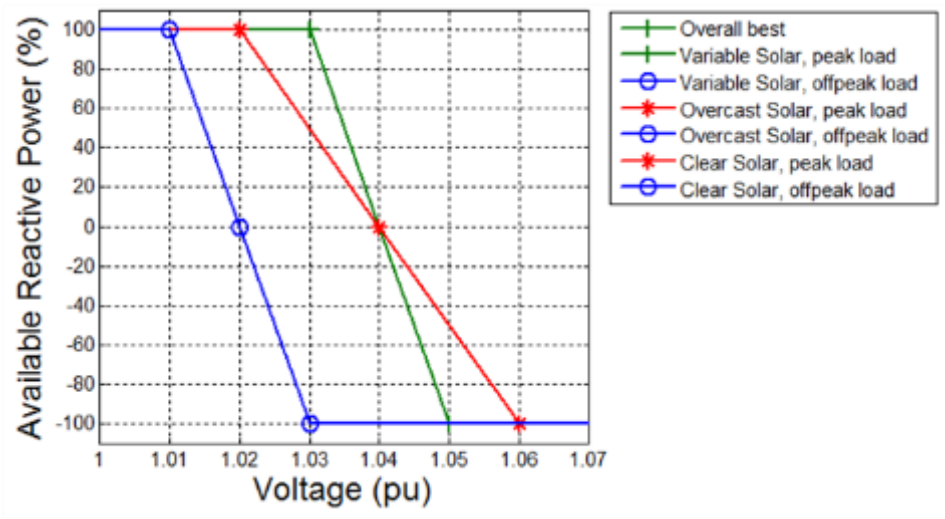

depend on load & solar profile

© 2015 Electric Power Research Institute, Inc. All rights reserved.

EPRI ELECTRIC POWER RESEARCH INSTITUTE

Isochronous / Droop Modes of Operation

- **Isochronous -** Isochronous control mode means that the frequency (and voltage) of the electricity generated is held constant, and there is zero generator droop.
- **Droop Control Mode** - strategy commonly applied to generators for frequency control (and occasionally voltage control) to allow parallel generator operation (e.g. load sharing).
- **For grid-tied microgrids –** all the DG and storage resources operate in droop mode and the utility is the isochronous generator reference.
- **For off-grid microgrids –** one generating unit is designated to run in isochronous mode and all other follow in droop mode. Larger units and higher inertia prime movers are normally the reference machine. PV inverters are nearly always operating in droop mode. Battery inverters may operate either way when generating.

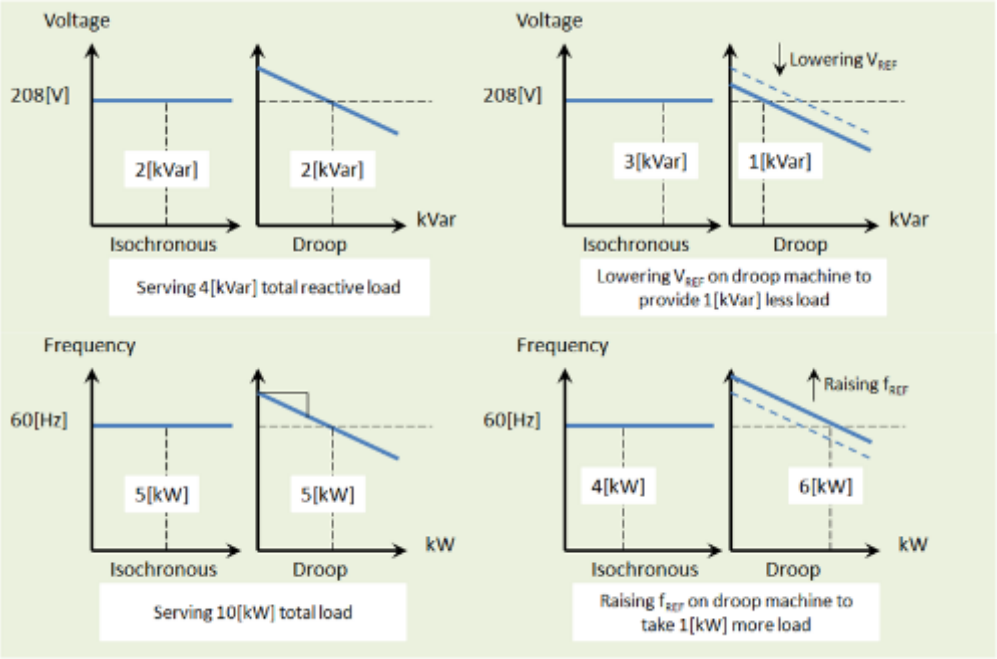

© 2015 Electric Power Research Institute, Inc. All rights reserved.

ELECTRIC POWER RESEARCH INSTITUTE

Microgrid Technical Challenges : Protection

- Not enough short-circuit current in Microgrid mode for protection to sense and operate
  - Voltage-based protection was recommended : No need for multiple settings group to support grid or islanded operation
    - May require additional equipment and change in protection settings.
- Insulation coordination could be an issue
- Microgrid operation may result in loss of effective ground reference

Keeping protection scheme simple translates into improved dependability as well as much simpler analysis in the event of misoperation

© 2015 Electric Power Research Institute, Inc. All rights reserved.

Four Ways Microgrids may Enhance PQ/Reliability

"Instant" Islanding

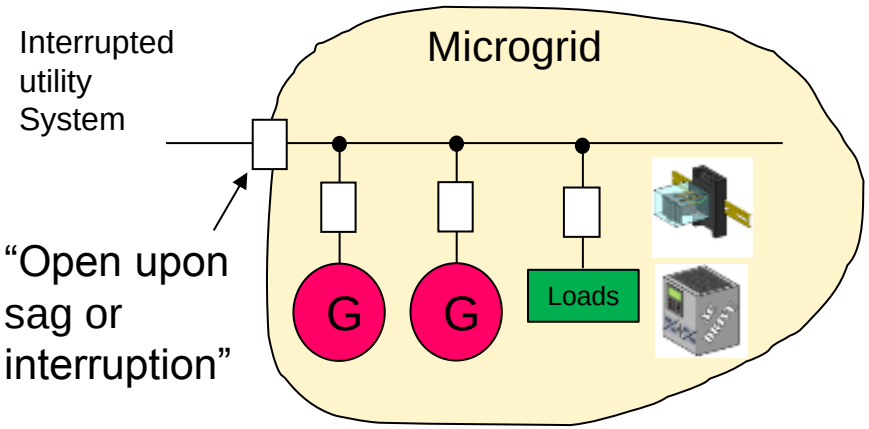

Proactive Islanding

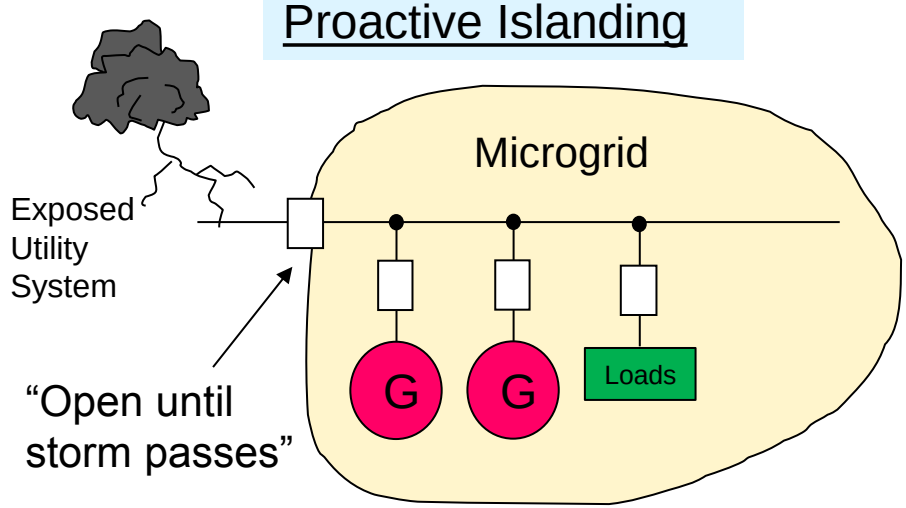

Partial Voltage Sag Mitigation

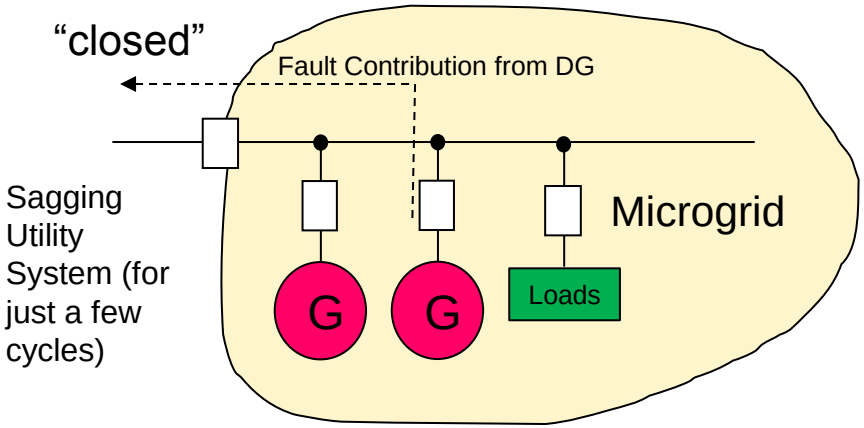

Lower Impedance between Source and Load: improves flicker, regulation during motor start

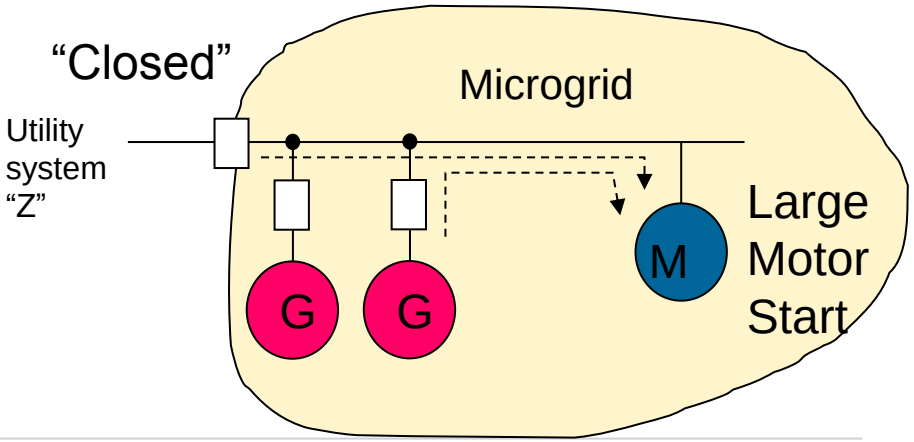

© 2015 Electric Power Research Institute, Inc. All rights reserved.

ELECTRIC POWER RESEARCH INSTITUTE

Four Ways PQ Could Get Worse

Reconnecting to the Grid

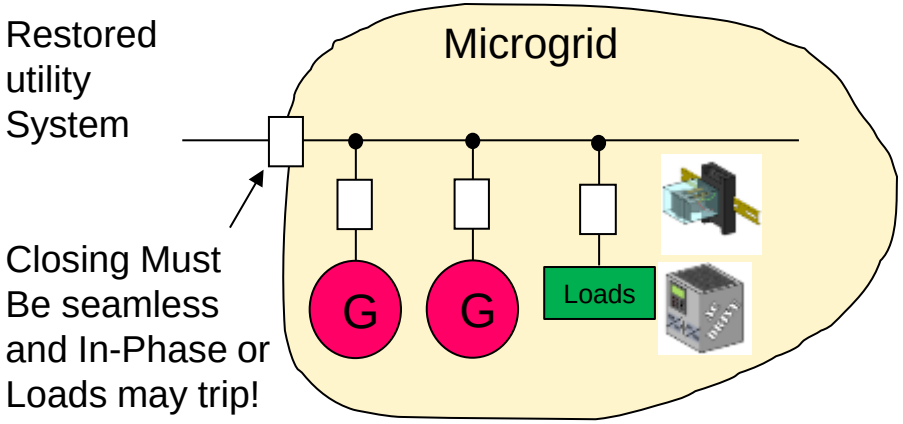

Starting Large Reactive Loads: Local VAR Compensation May be Needed

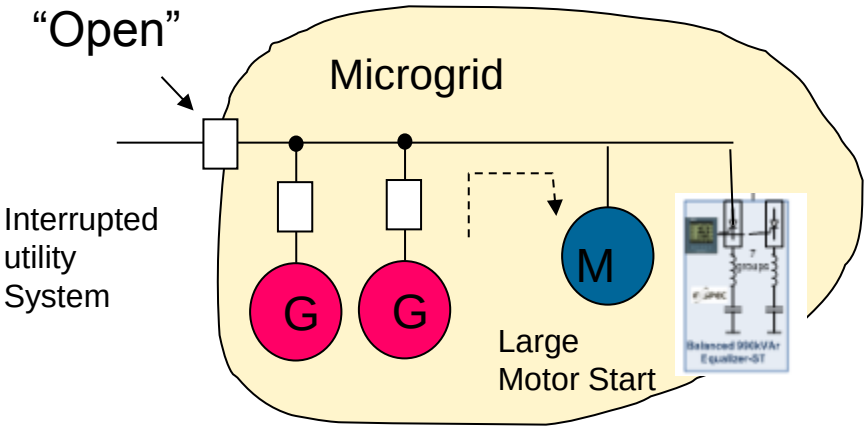

Deeper Voltage Sags/Fault Current Settings

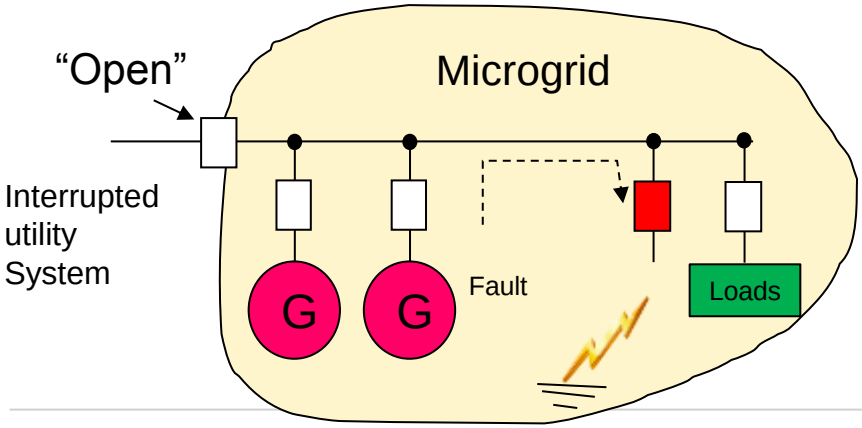

High Source Impedance: Increase VTHD

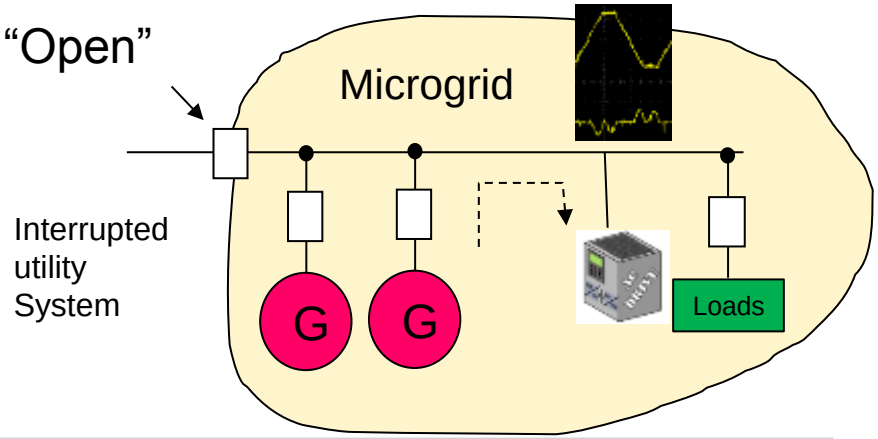

© 2015 Electric Power Research Institute, Inc. All rights reserved.

ELECTRIC POWER RESEARCH INSTITUTE

Need for Microgrid Coordination with Main Grid

- Architecture of local microgrid controller
- Relationship of local microgrid controller with DERMS -> DMS
- Identify the servies and functions
  - Interface and messages with DER
  - Connectivity Interface and messages with DMS and ENTERPIRSE bus

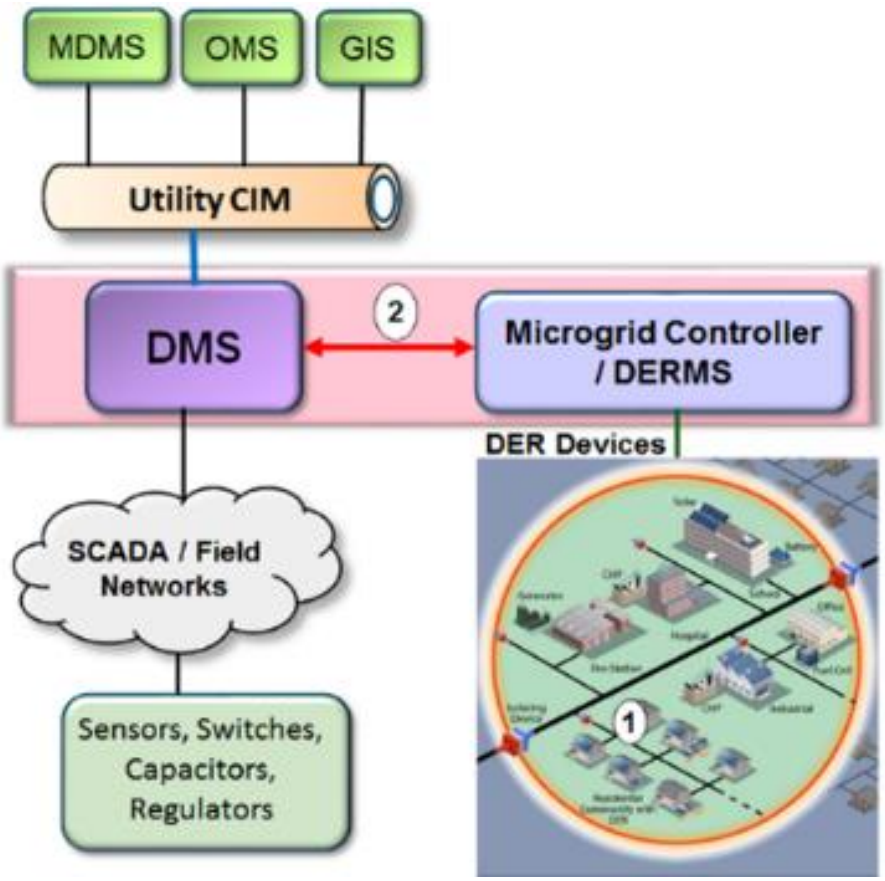

- Microgrid controller and DERMS interact with the DMS
- Microgrid controller could be the DER managing entity (DERMS) changing responsibilities and functions when interacting with the DMS

© 2015 Electric Power Research Institute, Inc. All rights reserved.

Applying this to Micro-Grids

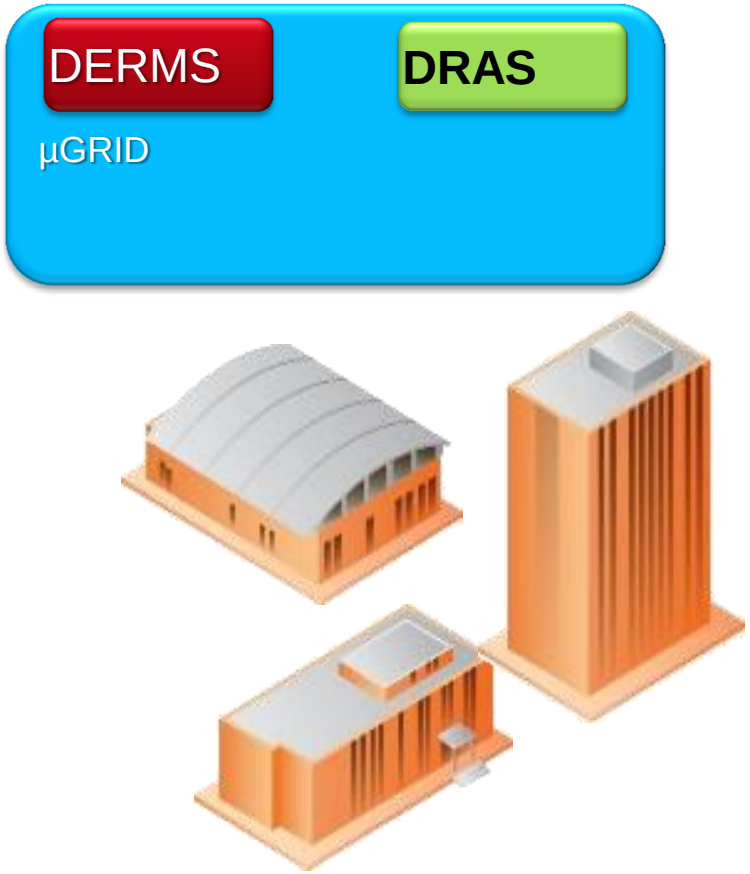

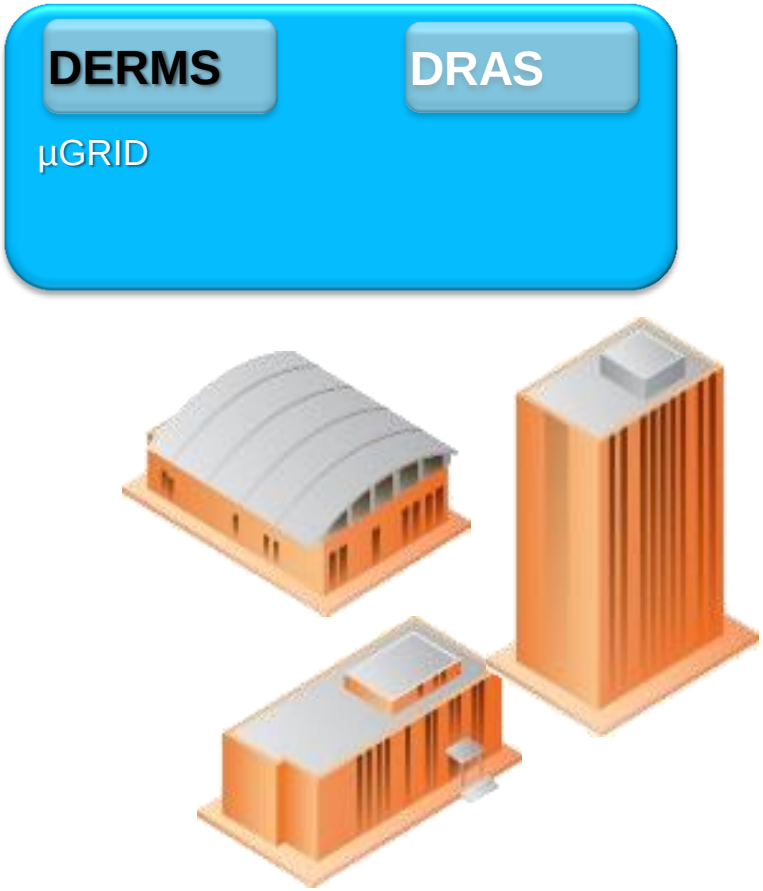

Grid Connected

Islanded

© 2015 Electric Power Research Institute, Inc. All rights reserved.

Recursive Architecture Interactions

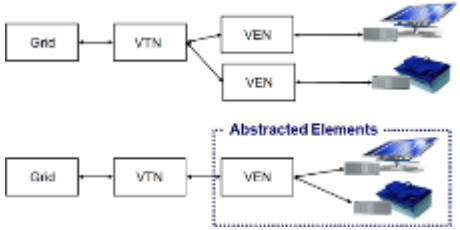

Virtual Top Node (Server)

Virtual End Node (Client)

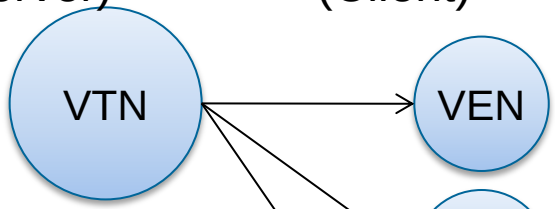

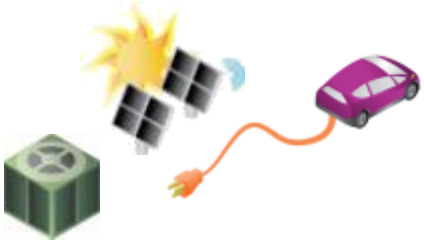

Load (AC, Water Heater EV)
Resource (Storage, PV, etc.)

ISO, Utility

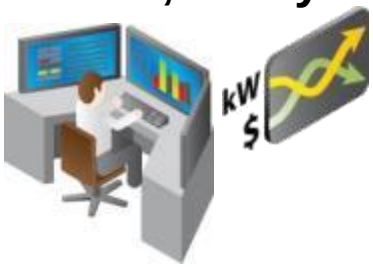

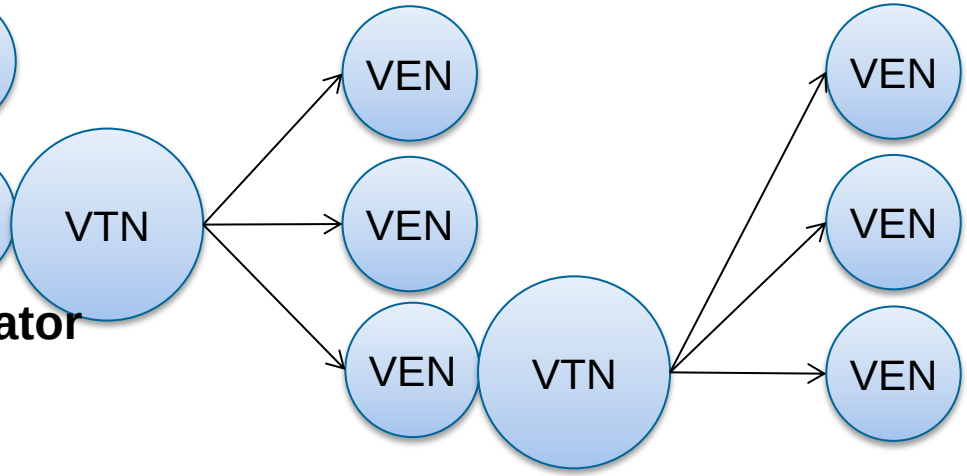

Aggregator

Micro Controller (Building, Microgrid)

Recursive Architecture Enables virtually any Business Model, Load or Resource Enables New Innovation

© 2015 Electric Power Research Institute, Inc. All rights reserved.

ELECTRIC POWER RESEARCH INSTITUTE

Microgrid Controller and DMS Relationship

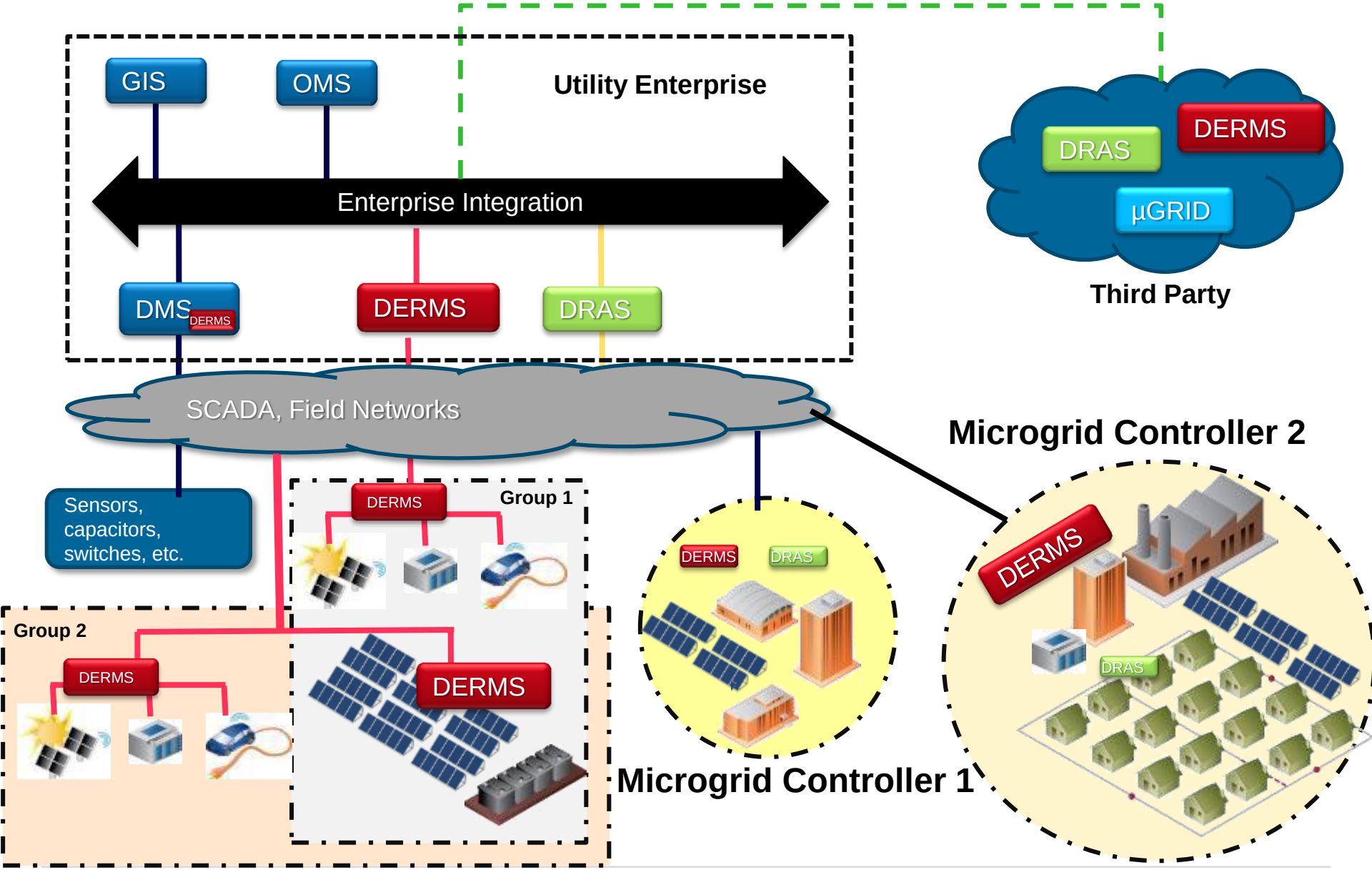

© 2015 Electric Power Research Institute, Inc. All rights reserved.

EPRI ELECTRIC POWER RESEARCH INSTITUTE

Together…Shaping the Future of Electricity

© 2015 Electric Power Research Institute, Inc. All rights reserved.

ELECTRIC POWER RESEARCH INSTITUTE