Advanced Distribution Management System (ADMS)

Thomas Bialek PhD, PE
Chief Engineer

July 7, 2015

© 2015 San Diego Gas & Electric Company.
All trademarks belong to their respective owners. All rights reserved.

Outage and Distribution Management System (OMS/DMS)

Replace existing OMS and install new DMS system with integrations to GIS, CIS, AMI, SCADA, Crew Dispatching …

WENT LIVE SEPTEMBER 29, 2012!

~~**Present**~~ Past

- Paperwork
- Manual processes
- Software systems are not fully integrated
- Most Unplanned outages are reported by customers

~~**Future**~~ NOW

- Near real time data
- Automated process
- Integration with many systems
- Faster outage restoration times
- Improved outage communications

Integrated OMS/DMS – Key Benefits Today

- Reduce outage time through integration with Smart Meter technology, SCADA, and customer calls with GIS based model
- Reduce outage time by improving utilization of response personnel
- Improve efficiency of planned switching process by taking advantage of mobile terminals in the field and automated generation and testing of switching plans
- Improve real time reporting of current outages for customers and management personnel
- Improve the management of resources during major events to more quickly restore service to customers and better predict and communicate restoration times

OMS/DMS: Project Scope

- ***Unplanned Outages***
  - Implement Oracle Network Mgmt System (NMS)
  - Integrate AMI & SCADA & Customer Calls for outage detection and prediction of interrupting device
  - Utilize GIS ESRI model into NMS model
  - Use NMS for restoration steps including SCADA operations
  - Use PING function to confirm outage status
- ***Distribution Management***
  - Use Real Time As-Switched Model of Distribution System
- ***Major Events-Storm Module***
  - Aggregate Assessment and Repair Status for All Outages
  - Estimate Overall Restoration Time and What-If Scenarios

OMS/DMS: Project Scope - continued

- ***Planned Switching***
  - Simplify Field Requests for scheduled work switching
  - Facilitate communication with customers for planned outages

- ***Outage Communications***
  - Implement Obvient's focalPoint
  - Provide real time stats on current outages – customers impacted and ETR status
  - Provide primary & secondary outage whiteboards
  - Provide status of repair jobs during storms
  - Provide outage maps
  - … and many more

OMS/DMS Smart Grid Inputs

- **Smart Meter/AMI**
  - Historical Transformer Load Profiles to support power flow calculations
  - Power Off Alarms – to detect outages
  - Power On Alarms – to verify restoration
  - Status Pings – to verify outage predictions and restoration
- **CBM**
  - Dynamic ratings for substation transformers
  - Substation Alarms and Analog (e.g. oil temperature) Information
- **SCADA**
  - Device Status (Open/Close)
  - Alarms and Analog (e.g. load and voltage) Information
  - Fault Indication and Fault current
- **Wireless Fault Indicators**

Outage Prediction Integrations

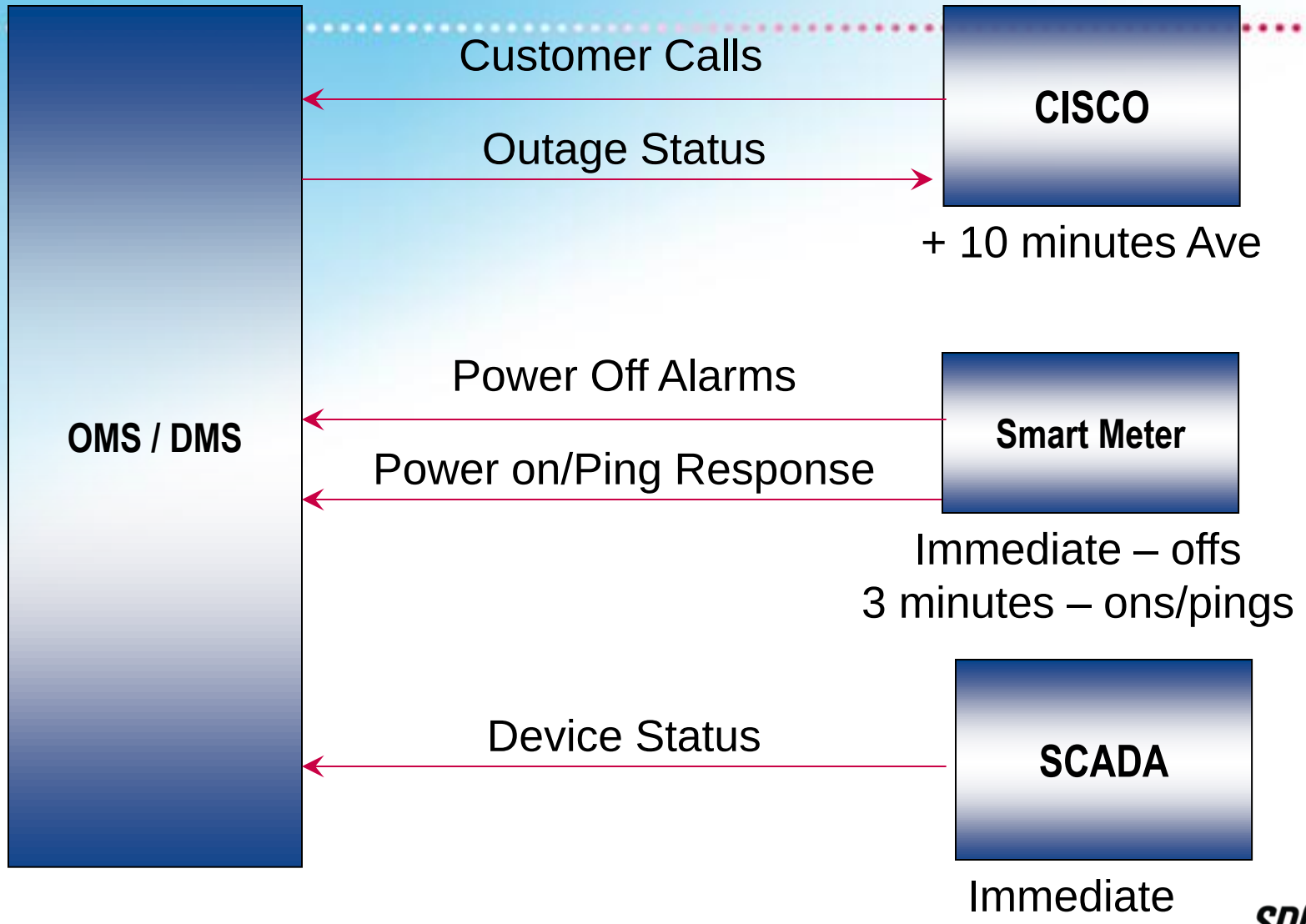

Positive Effects of AMI

- Fuse Outages are predicted earlier
  - (10 minutes 1st call, 25 minutes same prediction)
- Service Connection problems have been identified and resolved

Mobile Integrations

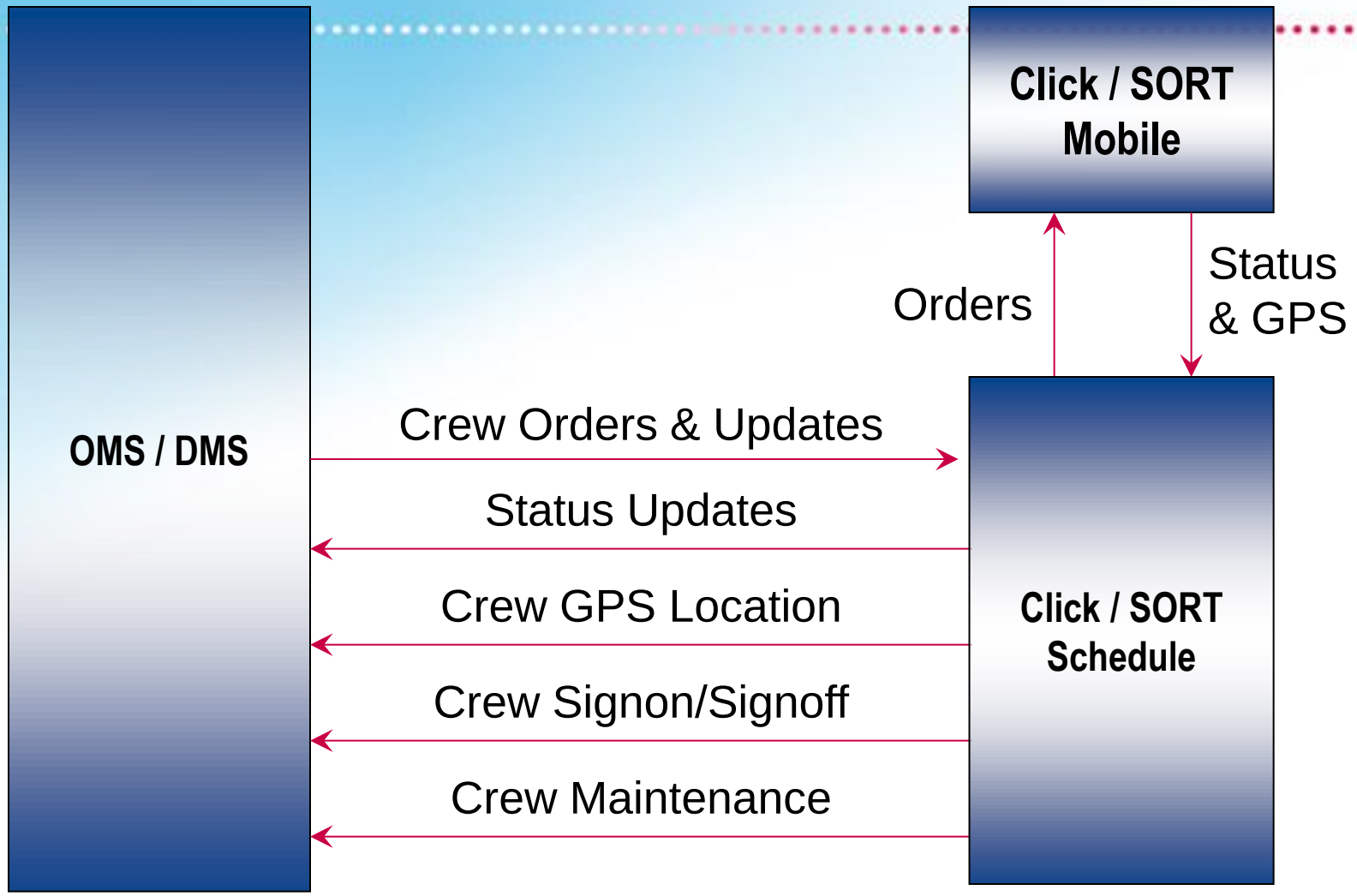

SDGE connected

A Sempra Energy utility

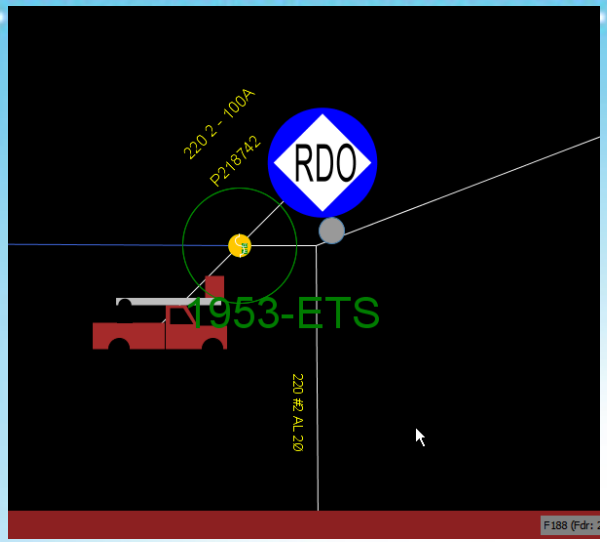

Real Time as-switched view of distribution system.

Integrated with AMI to more quickly detect outages. Average of 10 minutes before first customer call and 25 minutes before customer calls would predict same outage location for non SCADA outages.

Integrated with mobile dispatch system to dispatch work and track crew status.

Overall Summary of outages in progress and historical trend of outage and restoration activity

Current Outages - DISCLAIMER: This is preliminary outage information. Reliability Reporting provides the official audited outage record.

[9:06] by Org

	Total Outages	Disp Outages	Non Outages	Device Outages	Cust Out	Priority Cust	Active CAIDI	24hr CAIDI	Active Storm	ERT Expired	ERT < 15mi	ERT < 1hr	ERT 1 - 3hr	ERT None
BC	2	2	0	0	2	0	375	88	N	1	0	0	0	0
CM	1	1	0	0	1	0	20	49	N	0	0	0	0	0
NC	4	4	0	0	4	1	105	244	N	1	0	1	2	0

[9:06] by Device

	Total Outages	Disp Outages	Non Outages	Device Outages	Cust Out	Priority Cust	ERT Expired	ERT < 15mi	ERT < 1hr	ERT 1 - 3hr	ERT None	Active CAIDI	24hr CAIDI
Transformer	8	8	0	1	11	1	3	0	1	2	0	278	229
Other	1	0	0	1	0	0	1	0	0	0	0	0	86

Hourly Trend

12hr | 24hr | 48hr | 72hr

[9:06] Hourly Outage Trend

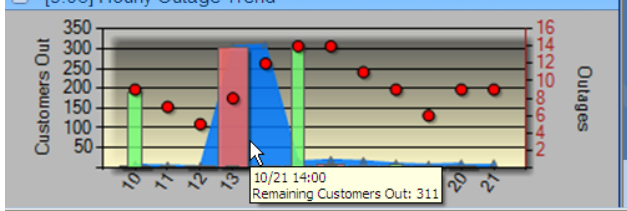

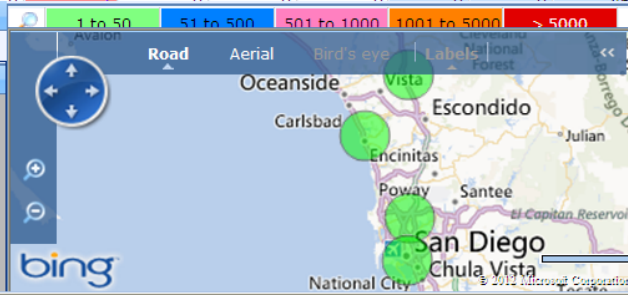

SDGE connected

Work Agenda: SAL - Active DSO

File Sort Filter Actions Help

Trouble DSO Switch Plans

Total Events In View	Est Cust Out	Calls	URG Cust Out	ESS Cust Out	S A Cust Out
4	220	54	0	0	3

Sort: Default **Filter: SAL - Active DSO**

Status	Event #	Rel E...	Evt Type	..	Plan #	Dis...	Substation	Circuit	Device	Device Type	Start Date	Est Restore Time	# ...	# Calls	Clues	Crew
ENR	8502	0	PDO		Emer 4139,...	CM	STREAMVIEW	430	F87607	UG Fuse	10/24/12 10:13	10/24/12 12:43	173	29	AMR,Out	3590-ETS
UAS	8370	8353	RDO	P	Emer 4079	EA	SANTEE	396	396-1	Hook Stick ...	10/23/12 17:39	10/24/12 12:31	37	14	AMR,Out-Othe...	
ENR	8494	0	RDO		Emer 4136	CM	GRANT HILL	1434	F85968	OH Fuse	10/24/12 10:04	10/24/12 12:34	9	10	AMR,Out-Other	4253-ETS, ...
RCVD	8495	0	PDO			EA	SANTEE	392	392-165M	Primary M...	10/24/12 10:08	10/24/12 12:38	1	1	Part	ETS0

Request | Steps | Impacted Customers | Overlaps | External Documents | View Areas | Safety Documents | Tracking/Audit Log

Events and Crews

Event	Association	# Out	Status	Device
8353	Forced	1130	RST	SN-12KV-396
8355	Manual	1	CMP	396-597
8369	Forced	371	INC	SN-12KV-396
8370	Forced	37	UAS	396-1

Step #	Version	Operation	Device	Structure ID	Details	Status	Instructed ...	Instructed By	Instructed To	Executed By	Completed Date
Default 1											
1		Open by SCADA	SN-12KV-396	SN		Completed					10/23/12 17:39
1		Instruct Remarks	636 ACSR A...		ETS REPORTS CAR POLE CONTACT	Completed	10/23/12 18..				10/23/12 18:07
2		Open	396-1		OPEN SWI 396-1 & TAG HN 5190-12A	Completed	10/23/12 18..				10/23/12 18:30
2		OK To Place HOLD Tag (HOLD #5190)	396-1			Completed	10/23/12 18..				10/23/12 18:30
2		Open	396-7		OPEN SWI 396-7 & TAG HN 5190-12A	Completed	10/23/12 18..				10/23/12 18:22
2		OK To Place HOLD Tag (HOLD #5190)	396-7			Completed	10/23/12 18..				10/23/12 18:22
2		Check Open	395-TS-396	P726125	OK OPEN SWI 395-TS-396, OPEN LINE DISCs & TAG HN 5190-12A	Completed	10/23/12 19				10/23/12 19:19

Road and Aerial Views of outage area.

Location of outage device and distribution transformers

Indication of where calls have been received

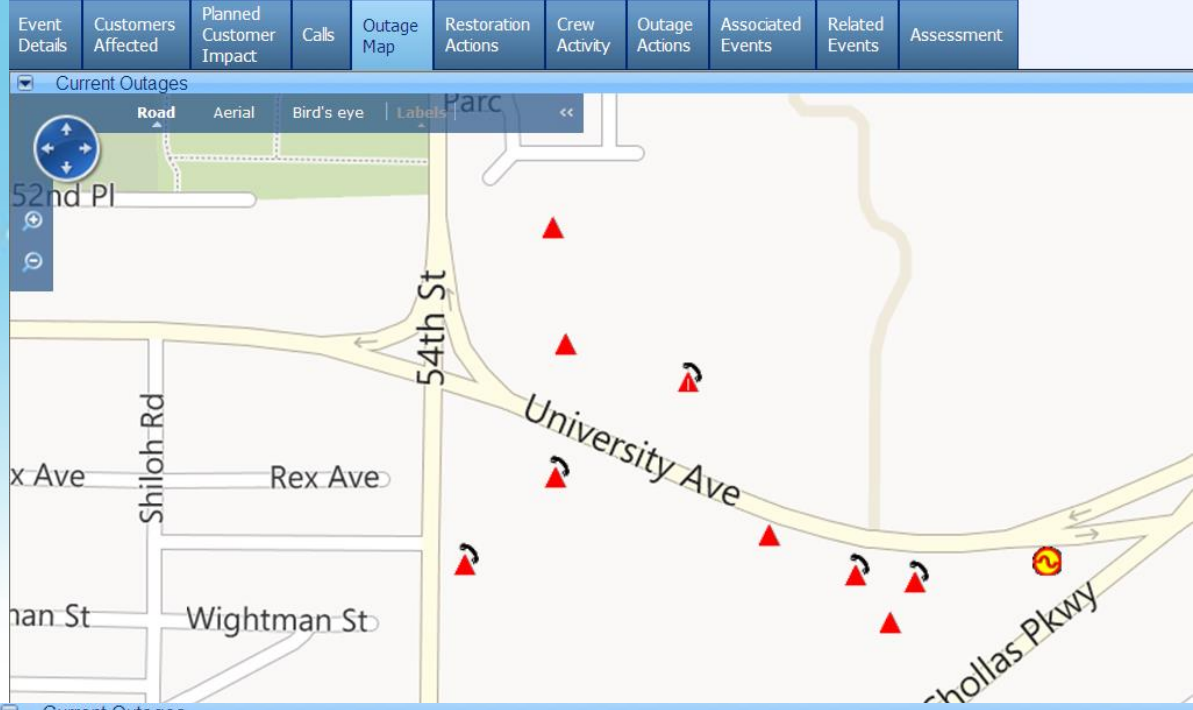

Integrated with SCADA for real time analog and status information.

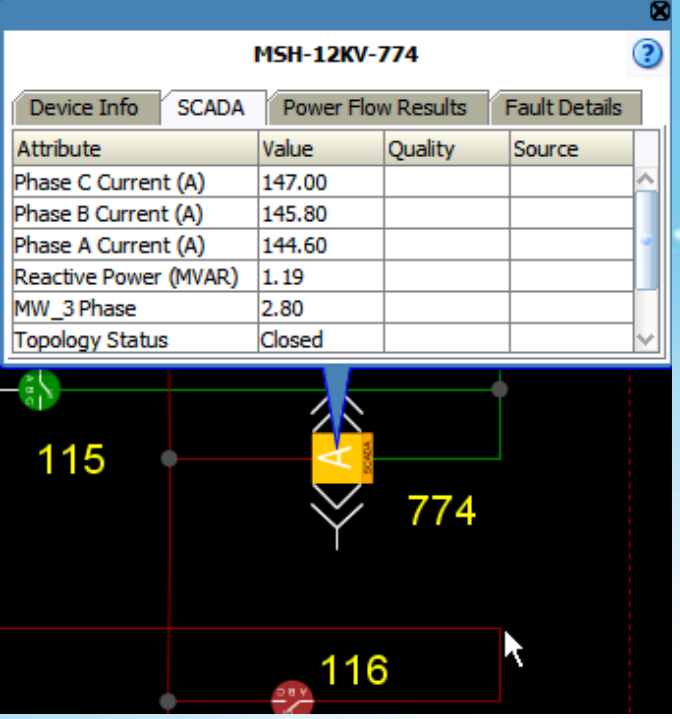

Distribution feeder power flow forecast calculated using real time SCADA reads and transformer profiles built from historical AMI data

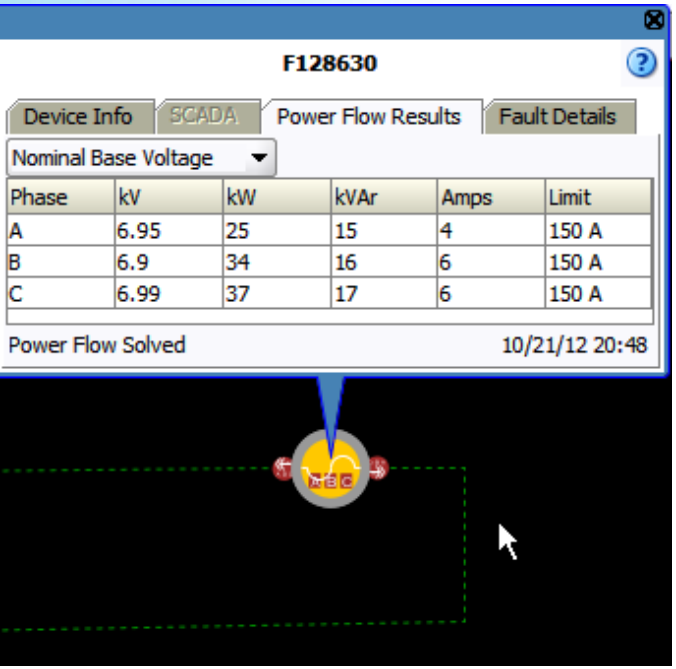

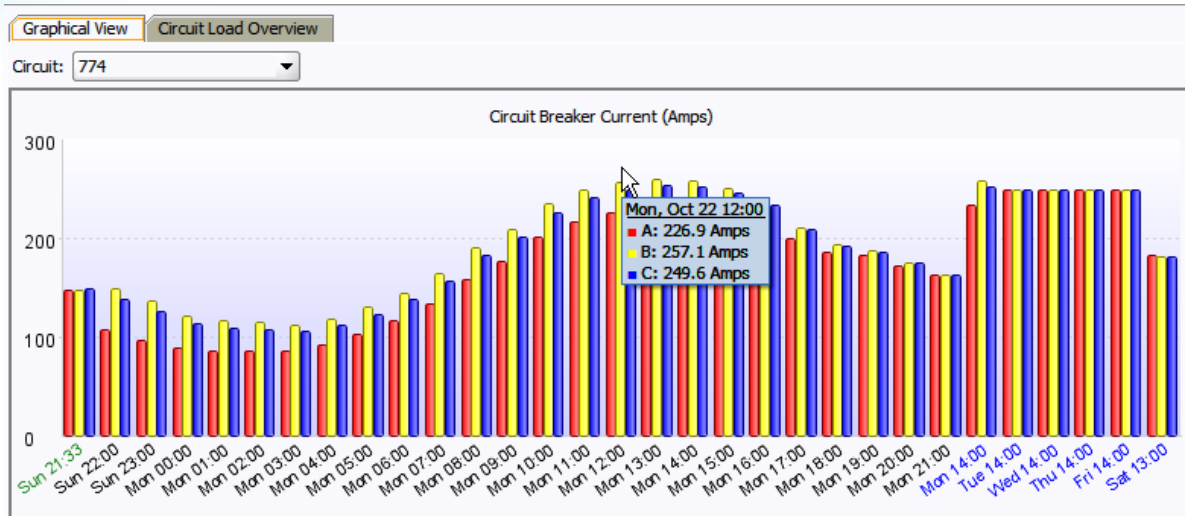

Power flow calculated for distribution devices and compared against rated capacity.

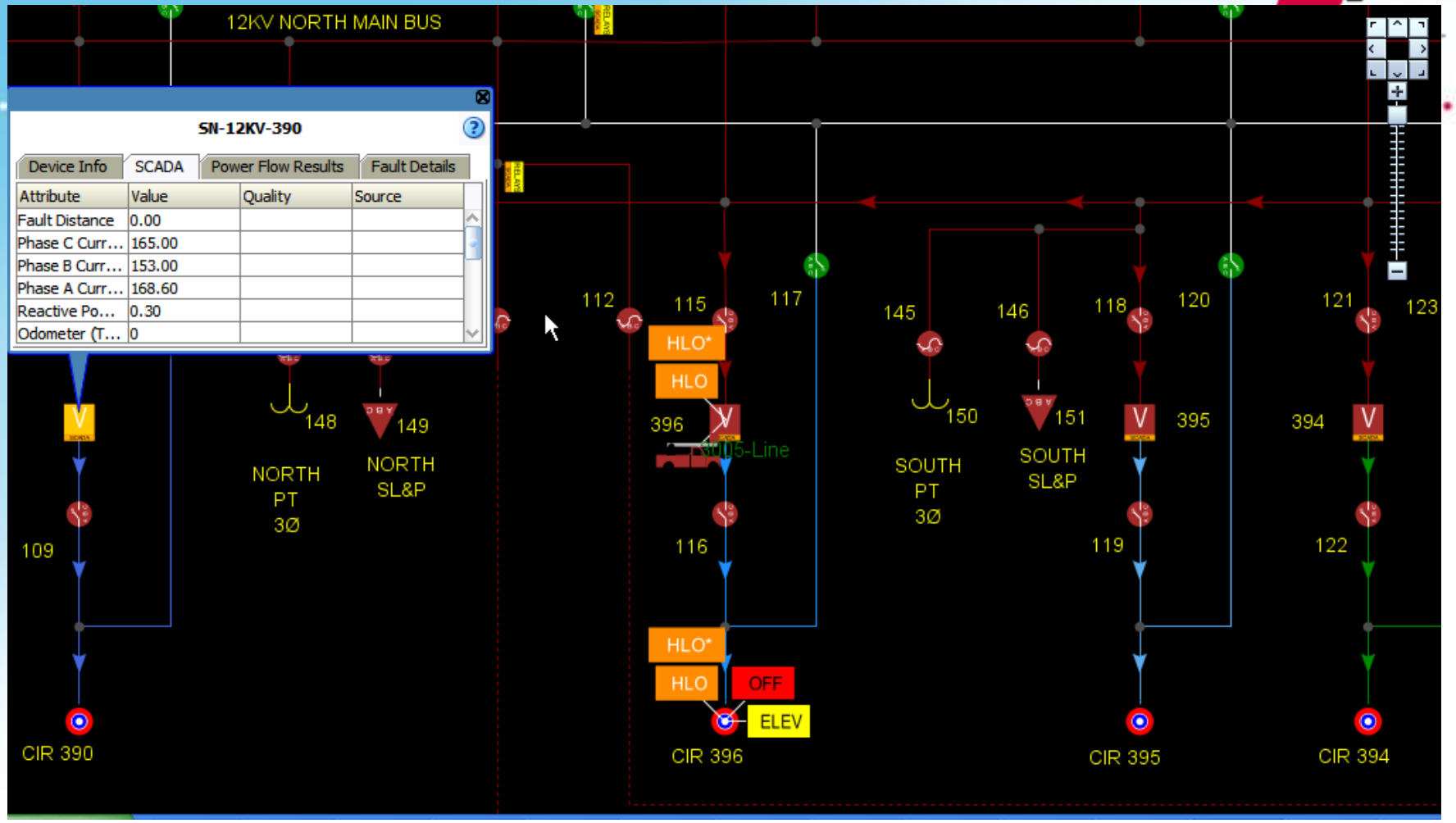

Real Time view of Substation with breaker status, reclosing status and SCADA measured currents.

Circuit 391 at Wed, Oct 24 09:48 (Calculated on Wed, Oct 24 09:48)

Violations (0) | Tie Points (5) | Transformers (1) | Capacitors (1) | Equivalent Sources (2) | Load Details (6)

SCADA Measurements

Device	Amps A	Amps B	Amps C	kW A	kW B	kW C	kVar A	kVar B	kVar C	kV A
309-T1-391	N/A	N/A	N/A	N/A	N/A	N/A	N/A	N/A	N/A	N/A
391-399	58	59	50	103	103	103	-421	-421	-421	N/A
391-400F	25	31	24	185	185	185	N/A	N/A	N/A	N/A
391-401	N/A	1	0	N/A	N/A	N/A	N/A	N/A	N/A	N/A
391-402	70	76	61	-318	-318	-318	406	406	406	N/A
SN-12KV-391	121	137	108	828	828	828	-224	-224	-224	N/A

Violations (0) | Tie Points (5) | Transformers (1) | Capacitors (1) | Equivalent Sources (2) | Load Details (6)

Tie Point	To Circuit	To Substation	To Circuit Amps A	To Circuit Amps B	To Circuit Amps C	Tie Point Capacity Amp...	...	Tie Point Capacity Amps B	...	Tie Point Capacity Amps C
281-T1-391	281	CARLTON HILLS	103	103	104	479	...	479	...	478
282-T1-391	282	CARLTON HILLS	192	191	191	393	...	393	...	392
282-T2-391	282	CARLTON HILLS	192	191	191	393	...	393	...	392
309-T1-391	309	CARLTON HILLS	108	110	108	475	...	472	...	474
391-T1-394	394	SANTEE	229	230	226	354	...	353	...	358

Violations (0) | Tie Points (5) | Transformers (1) | Capacitors (1) | Equivalent Sources (2) | Load Details (6)

Device	kVAR A	kVAR B	kVAR C	On Threshold	Off Threshold	# Energized Capacitors	# Total Capacitors	Regulat... Type	Measurement Attribute
391-344CW	-399	-403	-403	07:00	21:00	1	1	Time	09:57

Current Information for Circuit:

- Load Details for all SCADA devices
- Tie Point load and capacity
- Capacitor settings

OMS/DMS Smart Grid Applications Future Capabilities

- Use power flow calculations and real time modeling for unplanned and planned outages
- Self Healing grid – automatically detect outage, determine fault location and switch to isolate fault and restore customers - FLISR
- Load Balancing – determine overloaded circuits, provide switch plans to balance load and execute switching to balance load
- Volt/VAr Control – determine out of tolerance Volt/VAr conditions, provide recommended settings for LTC/Voltage Regulators and Capacitors
- Fault locating analysis using circuit model and fault currents
- Automation of reliability reporting to accurately calculate the scope and duration of outages

Drivers – Advanced DMS
The limitations of DMS today

Powerflow (PF) – Basis for DMS applications. If PF is incorrect, the following DMS applications are incorrect:

- Fault Location Isolation Service Restoration (FLISR)
- Suggested Switching (SS)
- Fault Location Analysis (FLA)
- Feeder Load Management (FLM)

- NMS Version 1.10: Power flow model does not utilize Distributed Energy Resources (DER's) characteristics

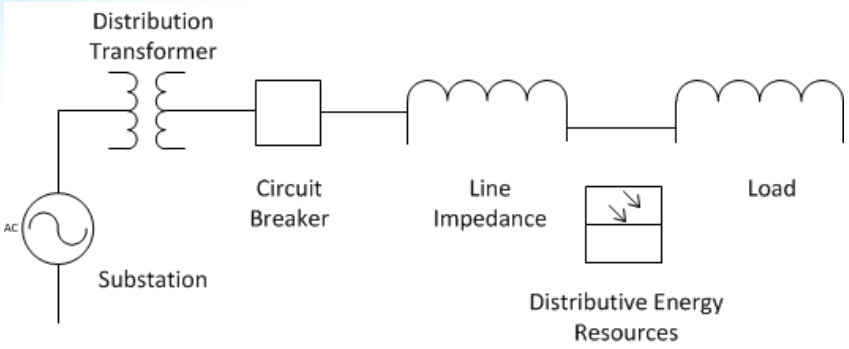

- NMS Version 1.12: Power flow model will utilize DER's characteristics

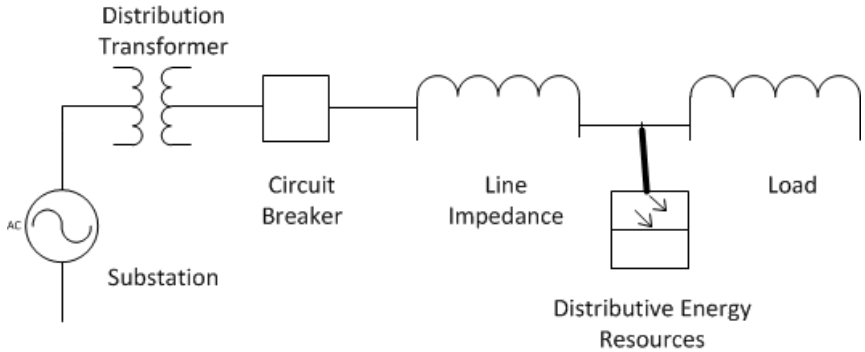

OMS/DMS Keys to Our Success

- Across Organization – Vision Agreement on Desired Capabilities
- Knowledgeable and Committed Business Team, Electric Operations Members, and Information Technology Members
- Strong Teamwork – Key Members Located Together
- Extensive training across organization
- Rigorous Testing on Functionality and Integrations
- Extensive Pilot with Key Systems Integrations
- Good Vendor Products and Cooperation
- It's Ready When It's Ready!

Smart Grid Engineering and Architecture

Conceptual System Model

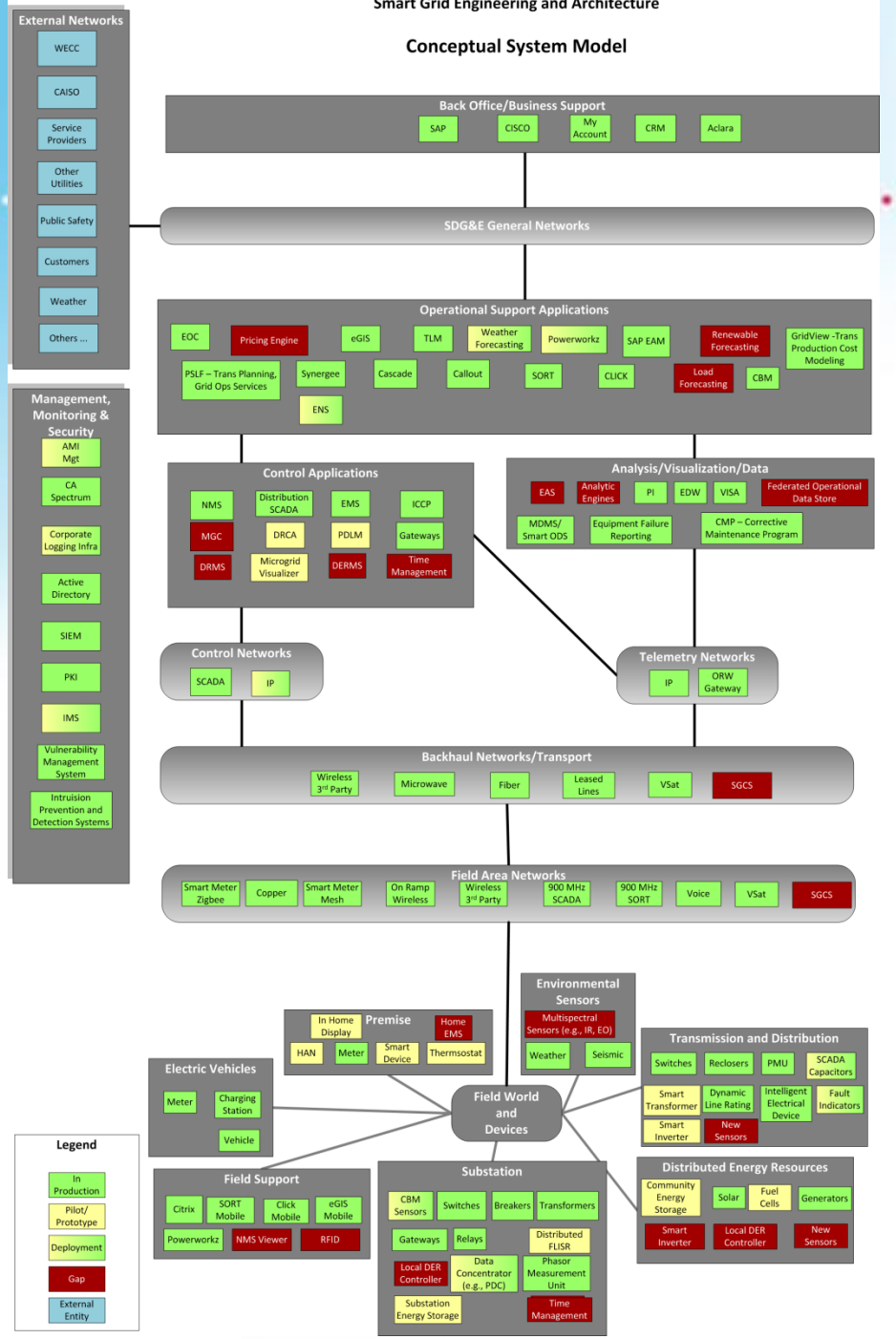

Questions ?

Thank you.

Thomas Bialek

Chief Engineer

tbialek@semprautilities.com
www.sdge.com/smartgrid/