SERI/TP-635-629

PROPERTY OF
U.S. GOVERNMENT

SOLAR ENERGY RESEARCH INSTITUTE
Solar Energy Information Center

APR 5 1983

GOLDEN, COLORADO 80401

A REVIEW OF THE SERI WIND ENERGY INNOVATIVE SYSTEMS PROGRAM

IRWIN E. VAS
PETER SOUTH

JUNE 1980

PRESENTED AT THE 3RD INTERNATIONAL SYMPOSIUM ON WIND ENERGY SYSTEMS
COPENHAGEN, DENMARK,
AUGUST 26-29, 1980

PREPARED UNDER TASK NO. 3533.35

Solar Energy Research Institute
A Division of Midwest Research Institute

1617 Cole Boulevard
Golden, Colorado 80401

Prepared for the
U.S. Department of Energy
Contract No. EG-77-C-01-4042

WIND ENERGY BRANCH

A REVIEW OF THE SERI WIND ENERGY INNOVATIVE SYSTEMS PROGRAM

Irwin E. Vas

Peter South

Solar Energy Research Institute
Golden, Colorado 80401

Summary

This paper presents the major efforts of the subcontracted research studies of the Wind Energy Innovative Systems Program supported by the Solar Energy Research Institute. Eleven of the 17 studies funded are R&D studies that consider potentially cost-effective innovative concepts. Highlights of these concepts are discussed.

1. Introduction

The Solar Energy Research Institute (SERI), established by an act of Congress in 1974, commenced operation 5 July 1977 as the U.S. Department of Energy's lead institute for solar energy research, development, and demonstration. The Midwest Research Institute, a not-for-profit research institute based in Kansas City, Missouri, was chosen to manage SERI for DOE. SERI is programmatically responsible to the Assistant Secretary of Conservation and Solar Energy and is responsible to the Chicago Operations Office for business, financial, and contractual matters. The SERI mission involves the acceleration to commercialization of each of the solar technologies. To this end, SERI conducts and manages research, development, and demonstration projects and programs.

SERI fulfills this function in the wind energy area by providing technical management for the advanced concepts program entitled Wind Energy Innovative Systems (WEIS) Program. The objective of this program is to determine the technical and economic feasibility of potentially cost competitive innovative systems. Studies performed in this program are subcontracted to small and large private companies as well as to universities.

Of the 17 studies funded, 11 are R&D studies that address various cost-effective innovative concepts. Six of the studies are short-term, generic studies assessing the value of innovative systems. Technical papers on most of these concepts are presented in the proceedings of the Wind Energy Innovative Systems Conference, which was held 23-25 May 1979 [1]. Highlights of these concepts are discussed in this paper.

To keep abreast of promising concepts, SERI issued an RFP in February 1979 requesting R&D studies that include theoretical aerodynamic and thermodynamic studies, model tests, and performance and economic evaluations. Depending on the cost and performance competitiveness of innovative concepts, a system could go into the proof-of-concept phase.

An RFP for generic studies of wind energy systems was issued in October 1978 and resulted in the funding of six short studies.

2. Review of Current Innovative Studies

SERI was authorized the responsibility to provide program management for the innovative systems program by the Wind Systems Branch, Department of Energy, during the latter part of FY78. Technical monitoring of R&D studies was to be performed by SERI. A list of these projects is provided in Table 1. All projects included theoretical, thermodynamic, and aerodynamic studies to confirm energy viability, and performance characterisitics and capabilities. These initial studies are followed by model design and test, economic evaluation, and finally, the establishment of concept cost competiveness. While many innovative systems can generate energy, the cost competiveness of the concept determines its acceptance in the energy market. Additional proof-of-concept tests are to be conducted for such potentially cost-effective concepts. Cost, performance, and engineering data will be developed from these tests to determine the cost of energy of a manufactured system.

A list of six short-term generic studies conducted to assess the advanced concepts is presented in Table 2. The results of these studies will soon be available in final reports.

3. R&D Studies

The report will be limited to a brief description of nine of the R&D projects funded by SERI with a more detailed description of the other two.

3.1 Innovative Wind Turbine

The Innovative Wind Turbine project of West Virginia University has been ongoing for about four years. The objective of the study is to investigate the technical and economic feasibility of vertical axis wind turbines having straight blades constructed with circulation controlled airfoil sections (Fig. 1). The study includes a theoretical analysis of the blade performance with circulation control and viscous effects, aerodynamic tests that complement the analytical studies, and a system cost study. The major objective has been to evaluate circulation control airfoils that exhibit higher lift coefficients than conventional airfoils to realize a lower cost of energy.

An indoor test rig is used to investigate the aerodynamic parameters of the blades. The rig is shown in Fig. 2. Blade lift, drag, and pitching moment are measured by a three component internal balance. The signals are fed through precision sliprings to an analog-digital converter and then to a minicomputer. Tests of circulation control and conventional blades are in progress.

3.2 Tornado Type Wind Energy Systems

The Tornado Wind Energy System project of Grumman Aerospace Corporation has been continuing for about four years. The objective of the study is to determine the technical and economic feasibility of the tornado-type system. The system utilizes primary air, which passes across the turbine, and secondary air, which passes across the louvers, to generate the "tornado." Preliminary analytical studies have been conducted to predict performance and scaling effects. Wind tunnel tests have been performed with small models to verify the concept. Recent studies have indicated that a fixed louver configuration would probably be more cost effective than one with moving louvers. Wind tunnel tests made with a 25-cm base diameter tower have indicated power coefficient levels of approximately 0.11 at 8 m/s. Model tests are planned for a 5-m high system with fixed louvers with a turbine of approximately 0.75 m in diameter (Fig. 3). Additional detailed studies are planned to model the vortex flow and to develop a procedure to predict the performance of full-size, cost-effective systems.

3.3 Wind-Powered Charged Aerosol Generator

The wind-powered generator is a charged aerosol electrofluid dynamic (EFD) generator operating at atmospheric pressure powered directly by the wind. Work on the charging mechanism for this generator has been carried out by the Marks Polarized Corporation for the past four years under government sponsorship. The concept involved is to develop a system that provides wind-driven charged particles utilizing minimum external energy. The unique characteristic of the generator is that it has no moving parts.

The objective of the study is to evaluate various techniques of producing charged droplets. Several charging methods were identified, four of which were investigated experimentally during the past year. From a comparison of these results with available

prediction methods, it was concluded that the induction charging micro water jet technique indicated the best potential for success (Fig. 4). The effort to investigate and evaluate the performance capabilities of the system using this charging method is currently being conducted.

3.4 Electrofluid Dynamic Wind Driven Generator

The Electrofluid Dynamic project of the University of Dayton Research Institute has been continuing for about four years. The goal of the project is to develop cost-effective techniques for providing low-mobility charged water droplets for wind energy applications. Analytical models were developed to provide limiting conditions for droplets and generator performance. Wind tunnel studies were conducted using various geometries and charging methods and the results were compared with analytical predictions. Wind tunnel models were devised to optimize the system performance (Fig. 5). Preliminary wind tunnel tests have measured energy levels of approximately 45 W/m^2 at a velocity of 8 m/s. Additional studies are aimed at optimizing system performance and assessing system cost performance for full-scale systems.

3.5 Energy From Humid Air

The Energy from Humid Air project conducted by the South Dakota School of Mines and Technology has been continuing for the past four years. The objective of the project is to determine a cost-effective method of converting the latent heat of water vapor in humid air into mechanical work. One of the models studied for various shape, size, and atmospheric conditions was a natural draft tower. The study indicated that this technique was not cost-effective even under optimum conditions A second concept utilizing an expansion-compression technique appeared to be potentially more cost effective than the natural draft tower. The current study is to consider a vortex-type flow both in the expansion and compression portions of the system (Fig. 6). Losses which may result from friction drag, turbine inefficiency, mixing, separation, and cooling effects are to be evaluated in order to assess the potential of the system.

3.6 The Madaras Power Plant

A study of the Madaras power plant has been conducted by the University of Dayton Research Institute. The objective of the study is to determine the cost effectiveness of a power plant in the 100 to 200 MW range. The study included theoretical and experimental investigations of rotating cylinders and a performance and economic evaluation of a system including the structural, electrical, and mechanical components. Preliminary results of the study indicated that the system could compete favorably with the first generation conventional horizontal axis wind turbine. Complexity of the system lies in the carriage, generators, and rotor components of the tracked system. A circular tracked system is illustrated in Fig. 7.

3.7 Vortex Augmentor Wind Energy Conversion

A study of the Vortex Augmentor Concept is being conducted by the Polytechnic Institute of New York. The purpose of the study is to determine the technical feasibility, performance, and economic potential of the concept. Analytical studies and wind tunnel

model tests have been conducted using an instrumented full scale model (Fig. 8). It is anticipated that the major problems relating to the stability and control of the system will be solved in conducting these prototype tests.

3.8 Oscillating Vane Concept

Although not a new concept, the oscillating vane wind energy converter apparently has not received in-depth study. Under subcontract from SERI, the United Technologies Research Center is studying the concept to evaluate the potential reduction in required support structure and in aerodynamic element complexity. The study is also intended to establish reliable cost data. A sketch of the configuration is shown in Fig. 9. The study will be both analytical and experimental. The experimental model will have a length of approximately 1.2 m and will be tested in the UTRC 1.2-m x 1.8-m low speed wind tunnel.

3.9 Dynamic Inducer

The dynamic inducer tip vane proposed by Van Holten of Delft Institute of Technology is being studied by AeroVironment under a SERI subcontract. The dynamic inducer is intended to augment the power of the HAWT by inducing a greater mass flow through the rotor disk. The study will cover theoretical analysis, wind tunnel investigation, and a full-scale verification on a 1200 Watt machine with a 3.5-m diameter rotor. The performance analysis which has been conducted shows that the performance of the dynamic inducer is extremely sensitive to drag effects. A sketch of a typical tip vane is shown in Fig. 10.

4.0 The Reduction of the Dynamic Loads on Rotor Blades

Two studies are presented in more detail as they consider different approaches to the same problem: the reduction of the dynamic loads on the blades of a horizontal-axis wind turbine.

4.1 The Diffuser Augmented Wind Turbine

The Diffuser Augmented Wind Turbine (DAWT) project of Grumman Aerospace Corporation has been continuing for about five years. The proponents of the DAWT maintain that one of its important features is low blade dynamic stresses. The relative insensitivity to yaw angle of the flow makes it possible to reduce yaw rates. This lowers the stresses created by the gyroscopic moments while the reduced turbulence level in the augmented flow lowers the turbulence-induced stresses. The objective of the study has been to develop a DAWT with a cost of energy (COE) competitive with conventional machines since the reduced dynamic stresses would not be relevant if the overall COE was uneconomical. In order to reduce the COE, theoretical and experimental studies have been done on increasing the augmentation ratio of the diffuser and decreasing its overall length. Other studies have examined low-cost techniques for manufacturing the diffuser.

Previous efforts by others used conventional efficient diffuser design. The work was abandoned when it was obvious that the conventional design would produce very costly diffusers. In a departure from tradition, Grumman recognized that to be cost-effective,

diffusers would not only need to have a high augmentation ratio but would also need to be short.

The initial work used a model with a 4.5-cm diameter inlet, which was tested in an open jet 30 cm in diameter. The model used screens to create a pressure drop and hence simulate a turbine. From over 150 different models, a baseline design was frozen for the next test phase. The design features were an area ratio of 2.78, an included angle of 60°, a length to diameter ratio of 0.5, and a two-staged wall slot-flow arrangement.

The next phase used a wind tunnel with a 2.1-m x 3-m working section and a geometrically similar model ten times larger than the one previously examined. The objective was to determine the performance trend at higher Reynolds numbers. To minimize the cost, only the baseline geometry was closely duplicated in the new test model and again screens were used to simulate the turbine. Three variants of the baseline diffuser were also constructed to study the flow separation suppression by wall jets. The larger model showed an improved performance with increased Reynolds number.

The next stage was to investigate the effects of the interaction of turbine flow fields with the diffuser. Again to minimize costs the test turbine was designed to operate with the baseline diffuser model previously used and near the best velocity speed up ratio obtained with the screens. At maximum augmentation, the turbine operated at a tip speed ratio of approximately one. Measured performance of the turbine-equipped model was much better than that of the screen-equipped model.

The fourth test phase investigated diffuser design improvements to enhance the performance and reduce the overall length, keeping the area ratio constant. The tests involved a model with a 15-cm diameter inlet in a 1.2-m x 1.8-m wind tunnel. The models were equipped with screens. Some significant improvements in performance were obtained when compared to the baseline diffuser. In particular a configuration denoted the "dump" diffuser yielded 16% greater augmentation with 20% shorter length. The best measured performance for the DAWT is shown in Fig. 11 to be about 4.2 times the power of the turbine alone. This ratio is expected to increase to 8-10 times the power of the turbine alone.

A certain amount of work still needs to be done to complete the aerodynamic study. Since the wind tunnel tests were conducted in a wind tunnel with a closed working section, Fig. 12, the data will be correlated with data obtained in an open working section wind tunnel. In order to reduce the length, the diffuser angle should be as large as possible. It is intended to experiment with a diffuser having an included angle of 90°. In addition, experiments will be continued with the special configuration known as the "dump" diffuser. Further work is needed on the effects of a higher tip-speed-ratio turbine on the system performance.

Studies aimed at reducing the cost of constructing the diffuser have examined a range of materials and the manufacturing techniques applicable to these materials. The candidate construction materials include mild steel, high-strength steel, aluminum, fiber-reinforced plastic (FRP), and ferrocement. FRP and ferrocement appears to have some advantages over the other materials.

The future efforts in this project might include detailed engineering followed by proof-of-concept test of the DAWT. The proposed model would have a turbine diameter of 2.75 m and would produce 5 kW at 8.9 m/s. The turbine would have three extruded aluminum blades, active pitch control, and a microprocessor controller. The diffuser would

have a 90° included angle, an area ratio of 2.75, and a "dump" configuration manufactured from ferrocement. The support would be an aluminum cylindrical pedestal, a yaw actuator within the pedestal and a concrete foundation. The rotor diameter would be about half the base diameter of the diffuser, which is about 90% of the diameter of the equivalent conventional HAWT designed for the same power rating.

In addition to these efforts, it is necessary to prove that the cost of energy from the DAWT is competitive with conventional machines. From Grumman's performance and cost projections it appears that the DAWT might be a contender with more conventional machines, particularly if significant difficulties are experienced with the dynamic stresses on the conventional machines.

4.2 Yaw With Blade Cyclic Pitch

Cyclic pitch control studied by Prof. Hohenemser of Washington University Technical Associates offers interesting possibilities for reducing both the complexity and the dynamic stresses on the rotor and nacelle of a horizontal axis wind turbine. It also allows overspeed control to be obtained by yawing the rotor rather than by feathering its blades.

The essential element of the passive cyclic pitch control is a hinge on the hub of a two bladed rotor that is set at a pre-lag angle of about 23° to the blade axis. When the blades are perturbed out of their normal plane the hinge angle causes a change in blade angle of attack that tends to produce a restoring aerodynamic moment. Hence, when the rotor is yawed the gyroscopic moments move the blade out of plane until the gyroscopic moments are balanced by aerodynamic moments. Also, if the rotor is held at a fixed angle of yaw the blades move out of plane until the new aerodynamic moment is zero.

The experimental program consists of a series of wind tunnel tests with a small model and followed by field work with a 7.62-m diameter rotor. The wind tunnel model, shown in Fig. 13, has a rotor diameter of 0.44 m and a blade chord of 2.5 cm. The hub is free to rotate approximately 9° about its pivot and the pre-lag angle is 23°. The tests were conducted in a wind tunnel with a closed working section 0.61 m x 0.61 m at wind speeds up to 11 m/s.

4.2.1 Passive Cyclic Pitch Assessment

The first wind tunnel test was an assessment of the model operation with special attention given to the performance of the cyclic pitch amplitude during yawed conditions. Blade pitch was set at approximately 0°. The model was operated at various wind tunnel speeds from 7.75 m/s to 11 m/s and varying yaw angles from 0° to 70°, while noting stability, smoothness of operation, and cyclic pitch amplitudes. Tip speed ratios for the model ranged from 1.5 to 5.8, and rotational speed varied from 350 rpm to 2400 rpm. The range of Reynolds number based on the 0.7R station was from 9,725 to 66,700—much lower than will be experienced by the full-scale machine, which will operate at approximately ten times the Reynolds number experienced by the model in the wind tunnel.

In the fixed yaw configuration, rotor rpm could be easily controlled by externally yawing the rotor for various tunnel speed conditions. Also, the rotor started easily and ran smoothly in both yawed and non-yawed positions. In the free yawing configuration, the model started easily and demonstrated a high degree of stability in all operating positions. The model ran smoothly, although slightly more vibration was noted in the free

yaw mode than in the fixed yaw mode. This apparently was due to the effect of the rotor wake on the tail vane. From the measurements the Passive Cyclic Pitch rotor operated over a large range of yaw angles, from start up to wind speeds at 11 m/s in a stable and reasonably smooth fashion with no notable difficulties.

4.2.2 Model Performance Data

Data were taken to establish the relationship between yaw angle and tip speed ratio in order to determine the autorotational performance of the model. The yaw angle was measured directly with a yaw angle gage set in the wind tunnel and rpm were measured using a strobe light. The model was mounted in the fixed yaw position where yaw angles could be controlled during the test. Blade pitch angles were set at approximately 0°, rotor overhang was approximately 0.08 m, and the tail boom length was approximately 0.27 m. The tests were performed at various rpm values ranging from 350 to 2400. Yaw angle, tunnel speed, and rpm were all measured in both the fixed yaw configuration and in the free yawing configuration.

Figure 14 shows the measured dependence of inverse tip speed ratio, $V/\Omega R$, upon rotor speed for zero yaw angle. This type of dependence exists for all yaw angles and is believed to be caused by the substantial effect of Reynolds number on blade drag. The Reynolds number, taken with the rotational speed at 0.7R, is 50,000 at 1800 rpm for the model rotor.

Since the inverse test speed ratio is a function of both yaw angle and Reynolds number, the curve in Fig. 14 was used to correct the tip speed ratio to that applicable at a Reynolds number of 50,000 whenever the data were taken at other speeds. When making the correction of $V/\Omega R$, it was found that all test results could be approximated by a single $V/\Omega R$ versus yaw angle curve. The results are indicated by the solid line in Fig. 15. The inverse tip speed ratio actually decreases, through the first 10° of yaw below the zero yaw value, indicating a slight increase in power available at yaw angles of 10° for the model rotor.

4.2.3 Comparison With Other Test Results

To compare the results obtained in the wind tunnel with previous studies, data was obtained from two previous rotor tests operating in yawed conditions. The first was a 1935 NACA test of a 10-ft diameter rotor which had four individually hinged blades with a total solidity ratio of 0.133. The blade pitch angle was varied within wide limits. The dashed curve in Fig. 15 refers to -3° pitch setting. The blades were untwisted and had a 4418 airfoil. The rpm was held constant at 550, representing at 0.7R, a Reynolds number of 620,000.

The second data source for comparison was a German DVL study of 1939. These tests were conducted with a four bladed model of 0.06 total solidity ratio, with a wide variation of pitch settings. The rpm was held constant at 430, representing a Reynolds number of 260,000. A -3° pitch setting (windmill definition) was selected for the curve. Despite the difference in solidity and Reynolds number, the dashed curve of Fig. 15 represents the data as well as the NACA data. The blades were also individually hinged. The DVL tests were not only for autorotation as were the NACA tests, but included driving and driven conditions, i.e., helicopter and windmill conditions.

When compared to these data, the model either autorotates at a much smaller yaw angle, or, at a given yaw angle it autorotates at a much higher value of V/ R. This must be explained by the increased losses at low Reynolds number and continues the trend seen in Fig. 14.

In summary, the model rotor with pitch-flap coupling apparently performed in a manner similar to that of other test rotors, but quantitative performance differed due to low Reynolds number effects.

4.2.4 Stopped Rotor Test

As a final test, the model was adjusted so that the blades were cantilevered in the rotor hub without allowing any cyclic pitch variation in order to observe the effect of stopping a wind rotor at high wind speeds in yawed flow. If the rotor were stopped by turning it exactly edgewise to the wind, slight turbulence in the tunnel caused large deflections in the flexures. This observation indicated the desirability of continuing to operate the rotor in autorotation at high yaw angles and high wind conditions rather than stopping the rotor which can cause large forces and blade deflections in high wind conditions.

4.2.5 Transient Tests

The purpose of this test was to determine model operation in a simulated wind shift of 20°, probably the most severe that can be expected. The testing procedure involved displacing the tail vane of the model by approximately 20° in yaw from equilibrium, releasing it, and noting the model response. The model was operated at a tunnel speed of 6.16 m/s (20 ft/s) with an rpm of 980 which resulted in an inverse tip speed ratio of 0.275. The model returned rapidly to the equilibrium position with little overshoot, indicating high dynamic stability. The cyclic pitch mechanism remained within the 9° limit.

4.2.6 Tail Vane Restoring Force Test

The purpose of this test was to determine the effect of the rotor wake on the tail vane restoring force. The restoring force of the tail vane was determined using a calibrated weight. The vane was mounted on the yaw bearing both with and without the rotor in place. Results of this test are shown in Fig. 16 where deflection angle in degrees is plotted versus a nondimensional effective lift coefficient for the tail boom. The effective lift coefficient is defined as the ratio of the restoring force on the vane to the dynamic pressure measured upstream of the rotor. The rotor wake does appear to have some effect on the tail vane restoring moment. However, because of the proximity of the wind tunnel walls the measured effect may not be totally representative of atmospheric operation.

4.2.7 Summary

The results of the model tests at this time indicated no problems with a passive cyclic pitch upwind rotor. It should be noted that due to the high blade section drag at the low Reynolds number the autorotating model should simulate full-scale conditions with high power extraction. The blade airfoil and its pitch settings were ill-defined, and the tunnel wall effect was substantial. For these reasons no attempt was made to compare the

model test results with the results of an analysis, rather the tests were only performed to provide qualitative aspects of the phenomenon. Additional work will include the test of a 7.62-m diameter turbine. The machine will be used to evaluate the performance of the passive cyclic pitch control in a field environment.

5. Conclusion

The paper discussed the major efforts of the supported research studies. No details were presented of the generic studies because they generally utilized the data available in the R&D studies.

The results of these studies have been well-documented. All the studies are aimed towards cost-effective energy producers. Accurate performance characteristics must be confirmed in order to establish a base cost of energy for the system. Accurate costs may only be developed as a result of an optimization design study, engineering design, and proof-of-concept. The Wind Energy Innovative Systems program supports research of these concepts in order to determine their cost effectiveness.

Acknowledgements

The authors wish to thank the Wind Systems Branch of the Department of Energy for supporting the Wind Energy Innovative Systems program.

References

1. U.S. Department of Energy. 1979 (December). Wind Energy Innovative Systems Conference Proceedings, 23-25 May 1979, Colorado Springs, Colo. Published by Solar Energy Research Institute, Golden, Colo.

Table 1. RD&D SUBCONTRACTORS

Project Title	Subcontractor	Principal Investigator
Innovative Wind Turbines (VAWT)	West Virginia Univ.	Richard E. Walters
Diffuser Augmented Wind Turbines (DAWT)	Grumman Aerospace	Ken Foreman
Tornado Type Wind Energy Systems (Tornado)	Grumman Aerospace	James T. Yen
Tests and Devices for Wind/ Electric Power Charged Aerosol Generator (EFD)	Marks Polarized	Alvin M. Marks
Electrofluid Dynamic Wind Driven Generator (EFD)	Univ. of Dayton Research Institute	John E. Minardi
Energy from Humid Air (Humid Air)	South Dakota School of Mines and Technology	Thomas K. Oliver
The Madaras Rotor Power Plant Phase I (Madaras)	Univ. of Dayton Research Institute	Dale H. Whitford
Vortex Augmentors Wind Energy Conversion (Vortex)	Polytechnic Institute of New York	Pasquale M. Sforza
Advanced and Innovative Wind Energy Concept Development-Dynamic Inducer	AeroVironment, Inc.	Peter Lissaman
Oscillating Vane Concept	United Technologies Corp.	R. L. Bielawa
The Yawing of Wind Turbines with Blade Cyclic Pitch	Washington University Technology Associates	K. H. Hohenemser

Table 2. GENERIC STUDIES SUBCONTRACTORS

Project Title	Subcontractor	Principal Investigator
A Definitive Generic Study of Augmented Horizontal Axis Wind Energy Systems	AeroVironment, Inc.	Peter Lissaman
A Definitive Generic Study of High Lift Device Wind Energy Systems	AeroVironment, Inc.	Peter Lissaman
A Definitive Generic Study of Augmented Horizontal Wind Energy Systems	Tetra Tech., Inc.	Mark Harper
A Definitive Generic Study of Augmented Vertical Axis Wind Energy Systems	New York Univ.	Martin I. Hoffert
A Definitive Generic Study of Sail Wing Wind Energy Systems	Washington Univ. Tech. Associates, Inc.	K. H. Hohenemser
A Definitive Generic Study of Vortex Extraction Wind Energy Systems	JBF Scientific Corp.	Theodore R. Kornreich

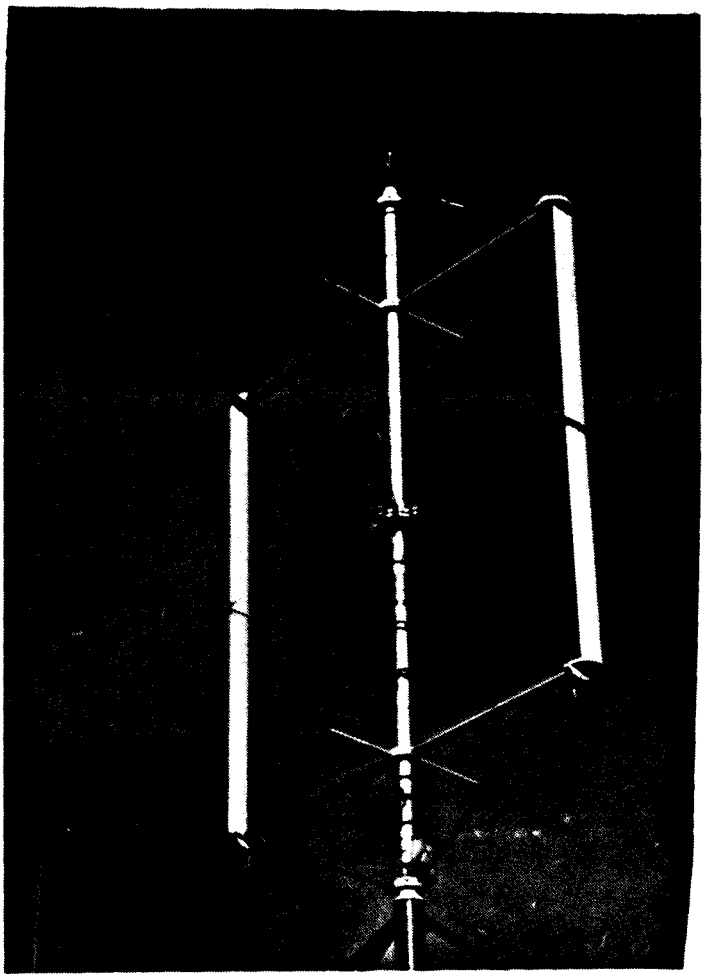

Figure 1. The WVU, Vertical Axis Wind Turbine Test Machine

Figure 2. Indoor Blade Test Facility

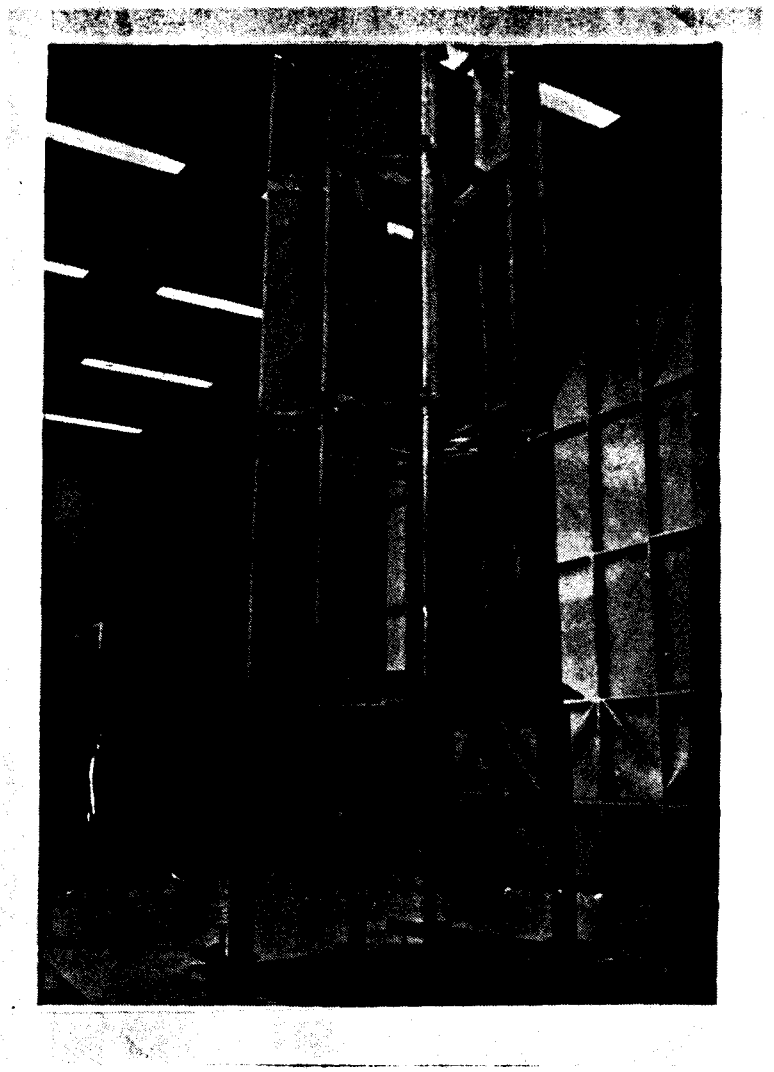

Figure 3. The Grumman Fixed Vane Tornado Wind Turbine Model

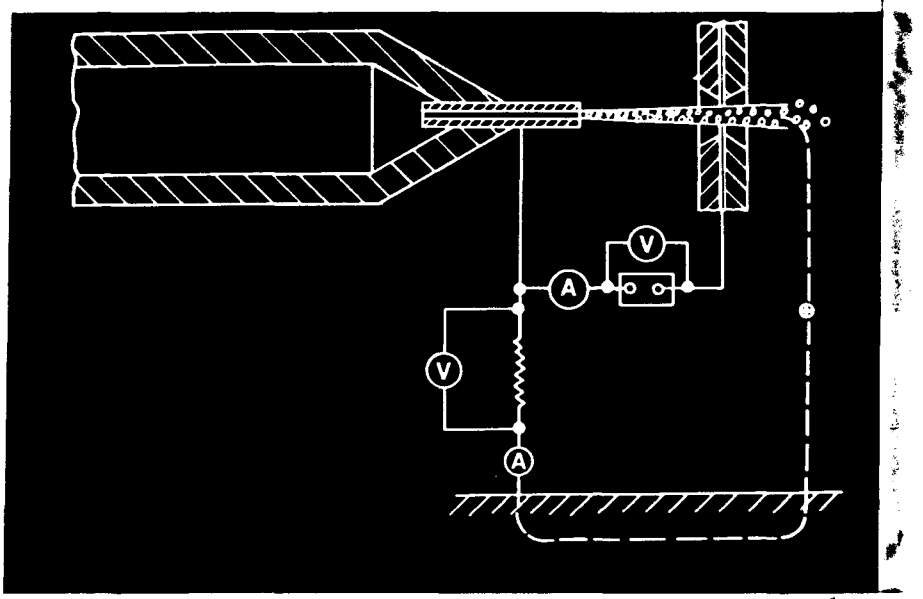

Figure 4. The Marks Method of Producing Charged Particles

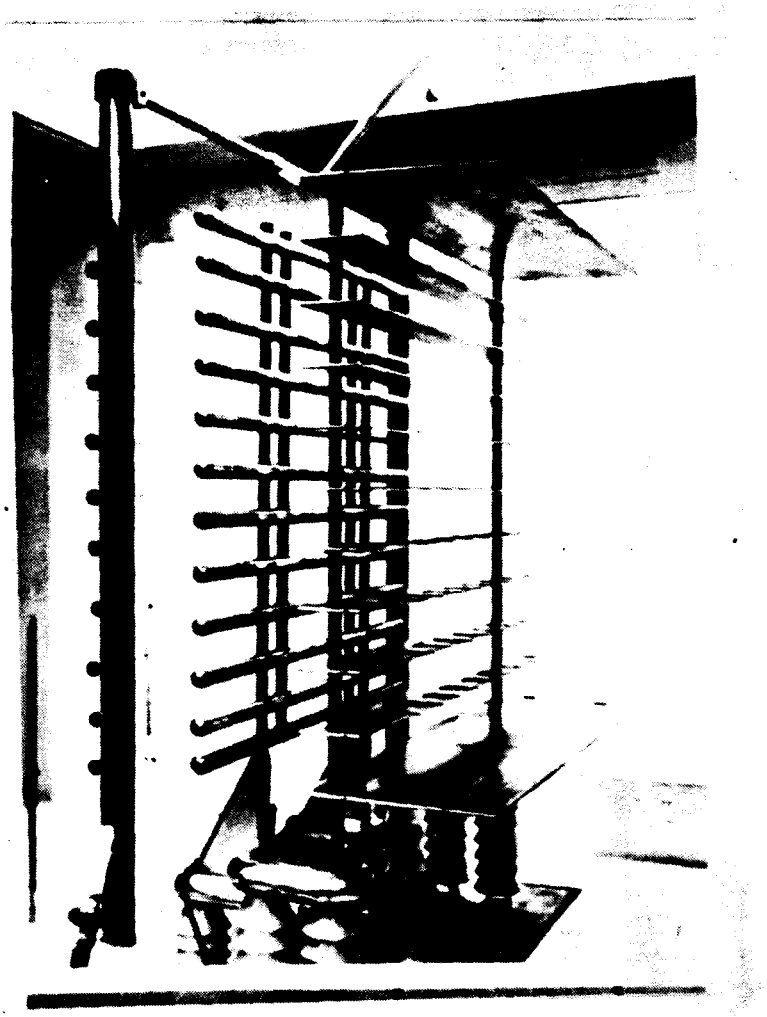

Figure 5. The University of Dayton Model for Extracting Power from Charged Particles in the Wind Tunnel

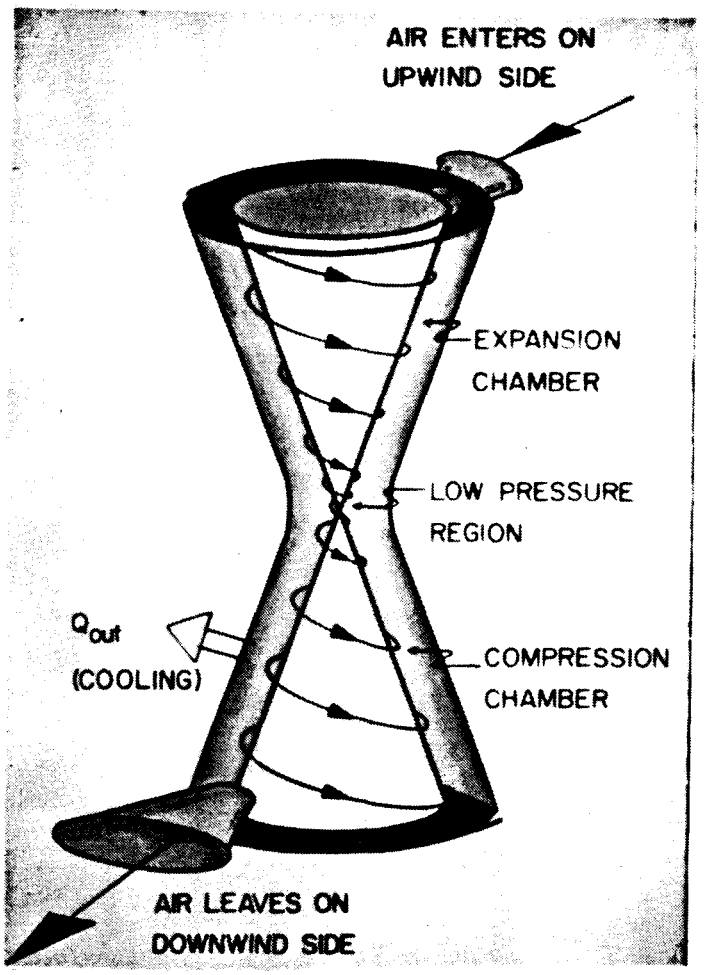

Figure 6. The University of South Dakota Concept of Utilizing Humid Air in a Vortex System to Produce Energy

Figure 7. The University of Dayton Madaras Rotor Tracked System Concept

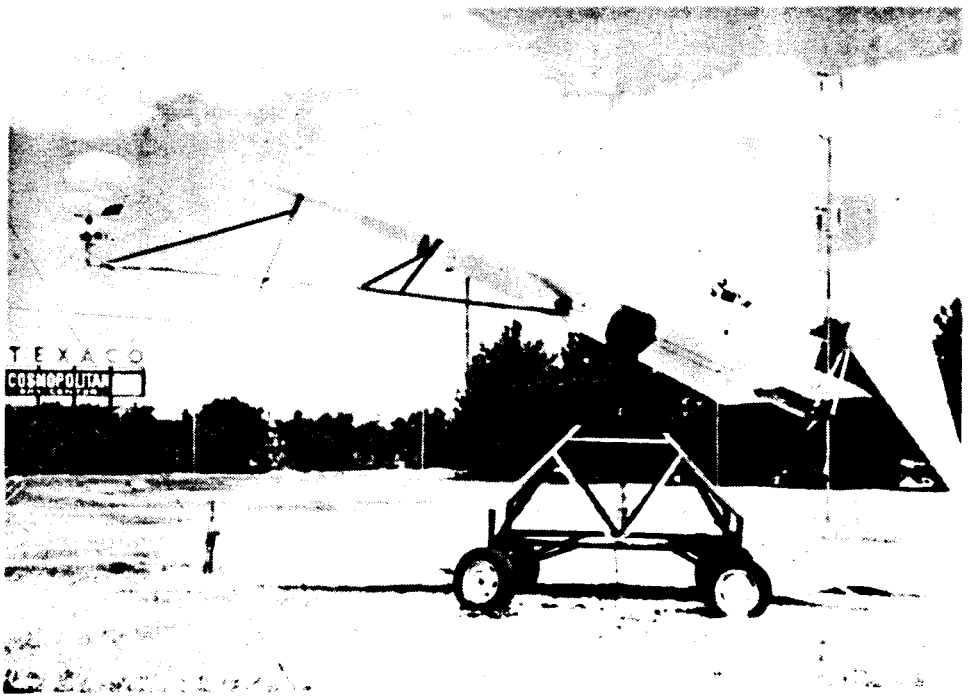

Figure 8. The Polytechnic Institute of New York Vortex Augmentor Wind Turbine

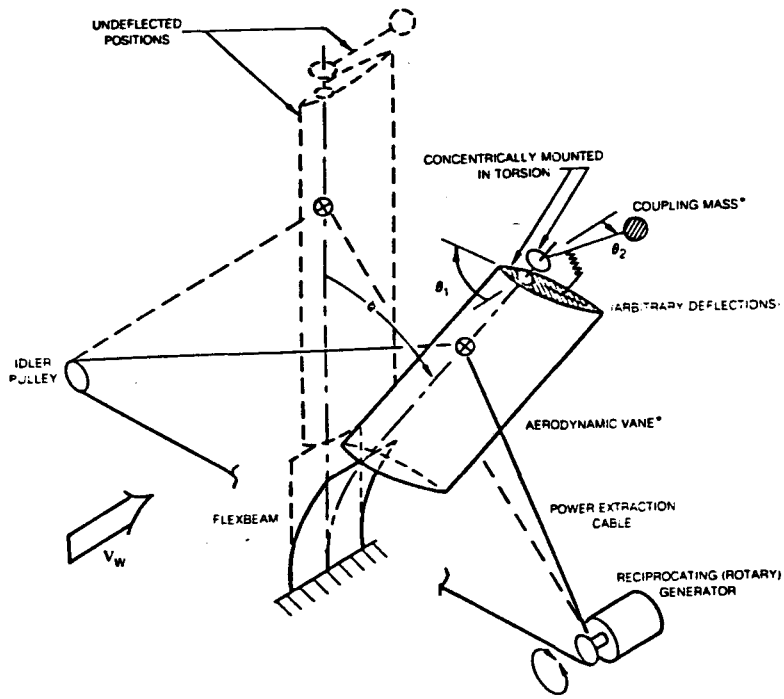

* COUPLING MASS IS ELASTICALLY CONSTRAINED IN TORSION TO FLEXBEAM
AERODYNAMIC VANE IS ELASTICALLY CONSTRAINED IN TORSION ONLY TO COUPLING MASS

Figure 9. Schematic of Oscillating Vane Wind Energy System with Three Flutter Degrees-of-Freedom

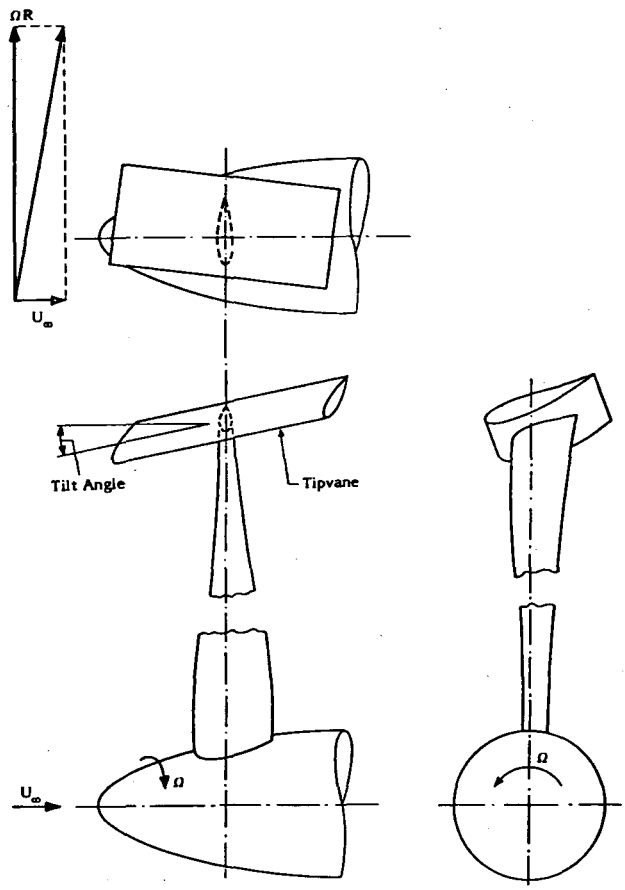

Figure 10. Sketch of Tip Vane Orientation

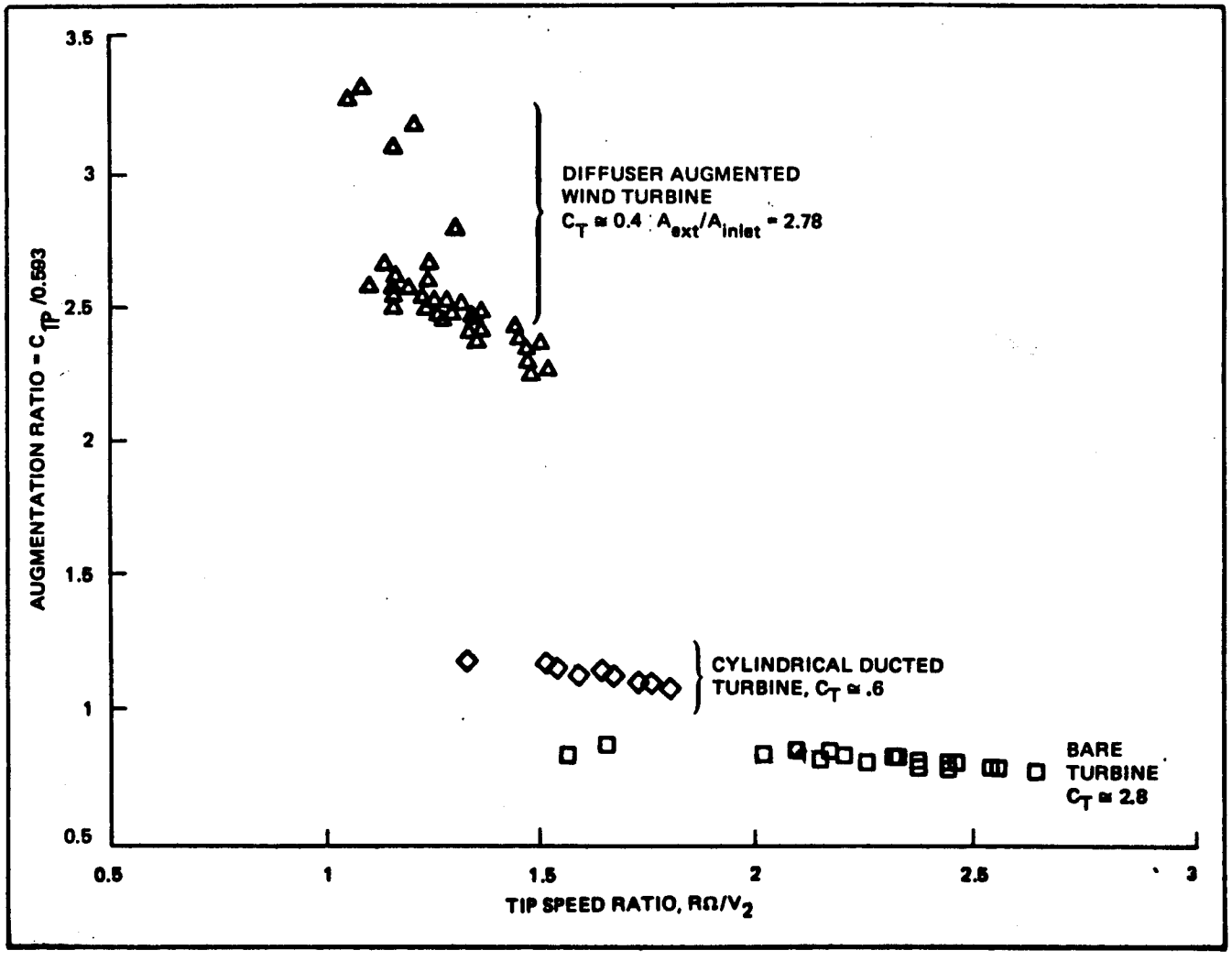

Figure 11. Comparison of Turbine Performance in the Wind Tunnel for Different Augmentation Systems

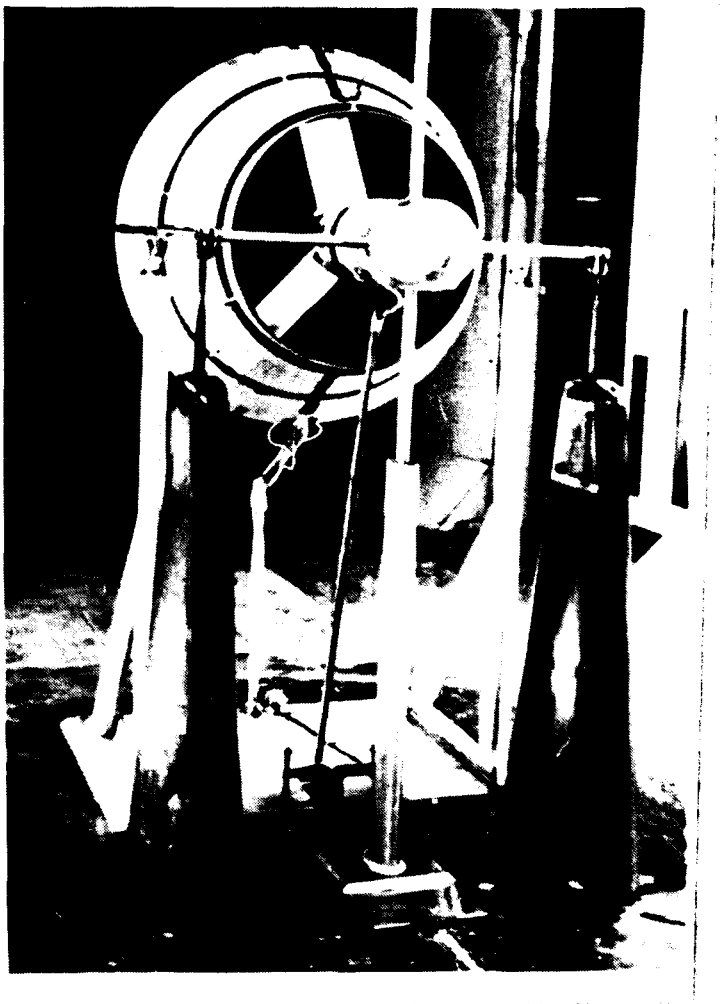

Figure 12. The Grumman Diffuser Augmented Wind Turbine Model in a Wind Tunnel

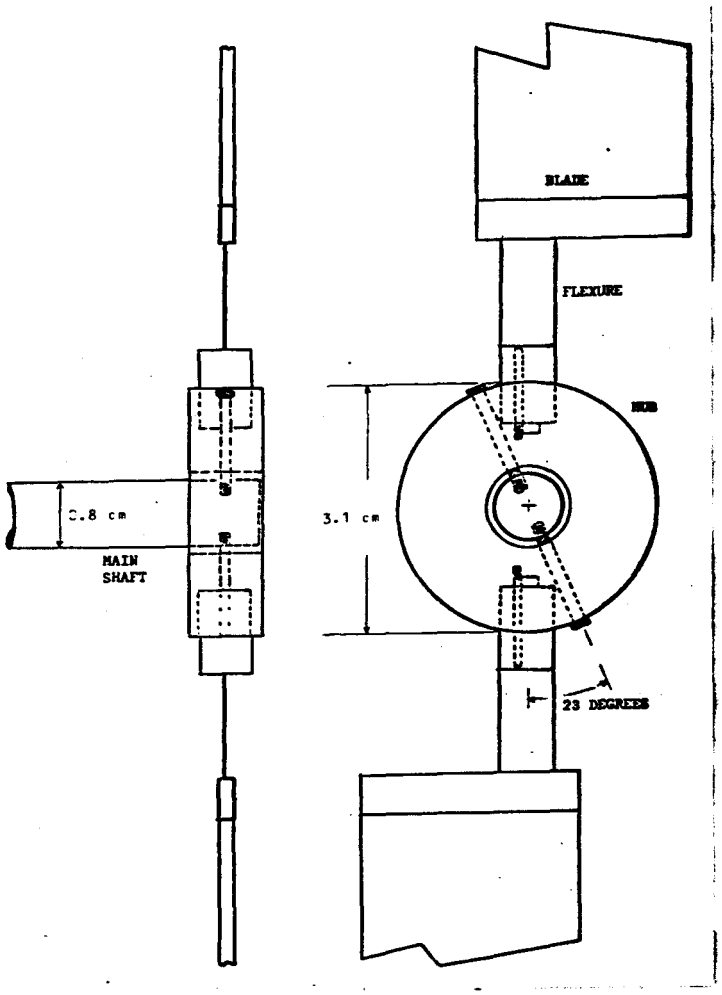

Figure 13. Hub and Cyclic Pitch Hinge

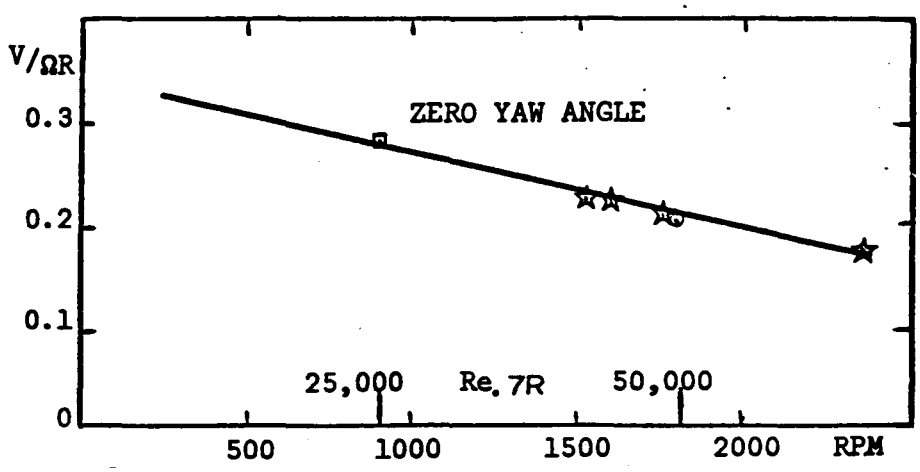

Figure 14. Effect of Rotor Speed or Reynold's Number on Inverse Tip Speed Radio

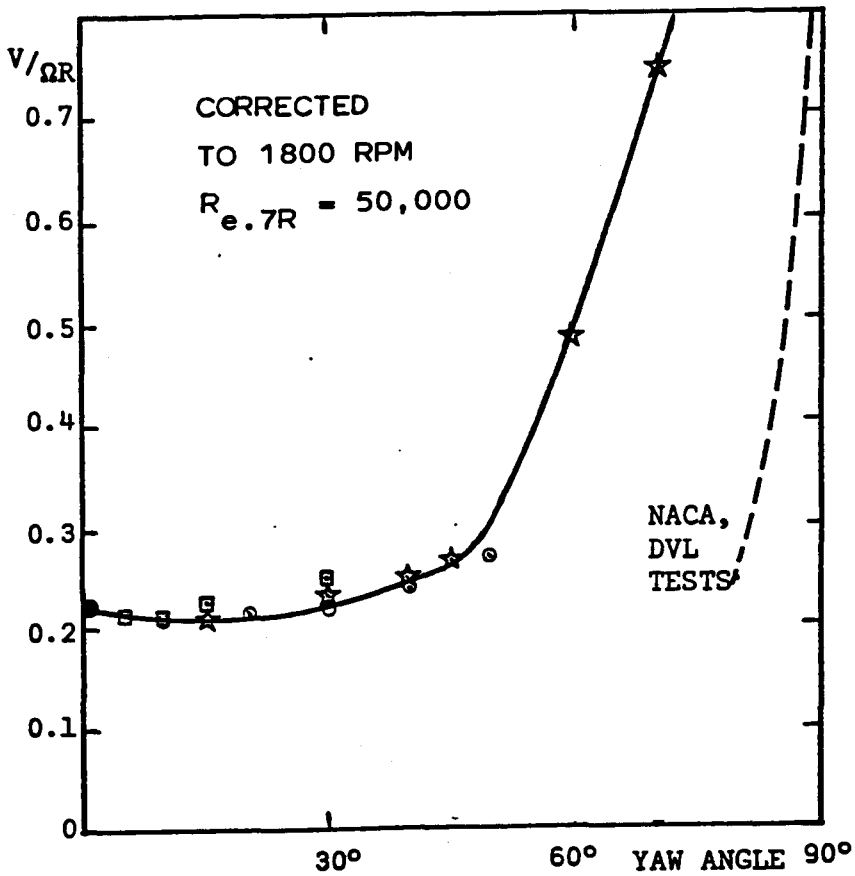

Figure 15. Inverse Tip Speed Ratio Versus Yaw Angle

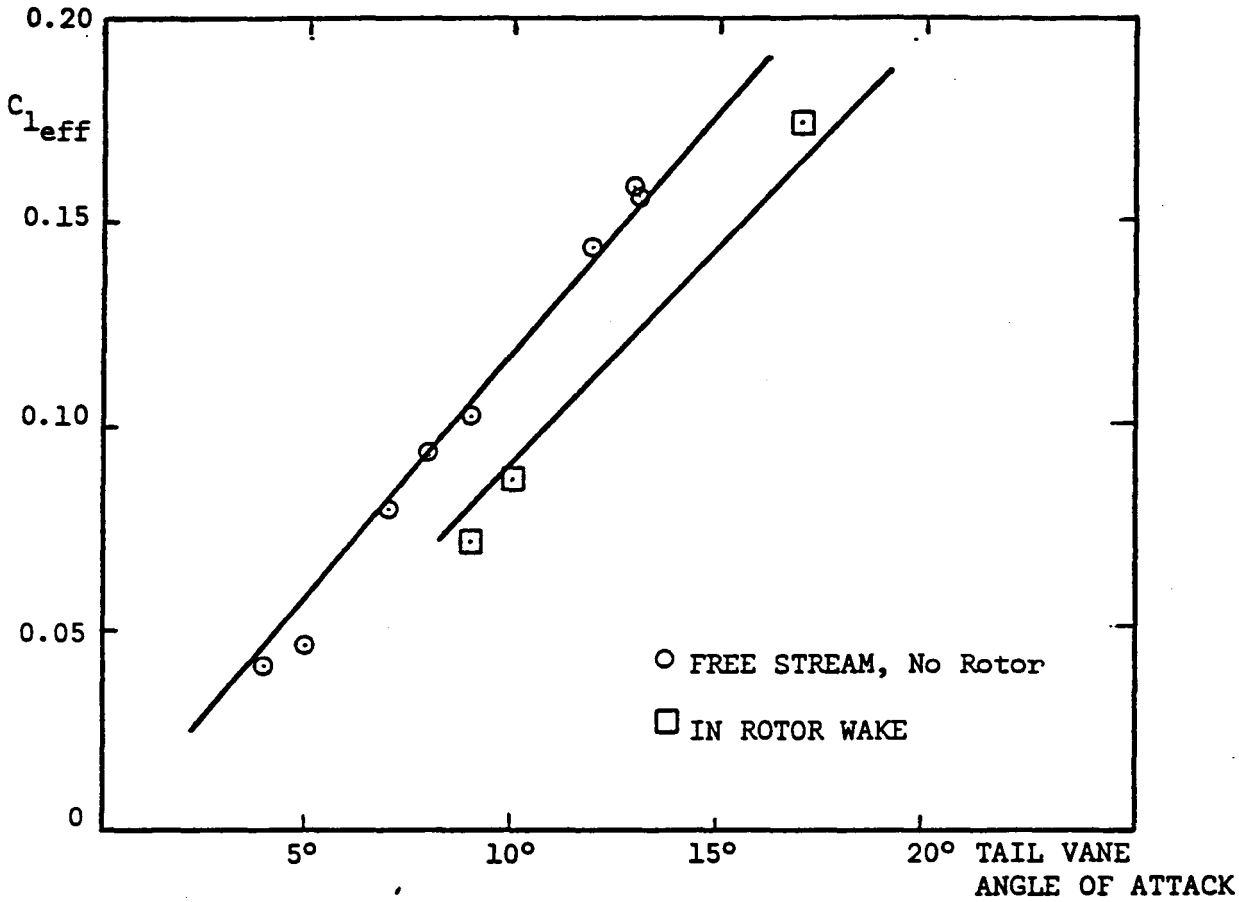

Figure 16. Effective Lift Coefficient Versus Angle of Attack for Model Tail Vane Both In and Out of Rotor Wake Effect

Document Control Page	1. SERI Report No. TP-635-629	2. NTIS Accession No.	3. Recipient's Accession No.

4. Title and Subtitle

A Review of the SERI Wind Energy Innovative Systems Program

5. Publication Date

May 1980

6.

7. Author(s)

Irwin E. Vas; Peter South

8. Performing Organization Rept. No.

9. Performing Organization Name and Address

Solar Energy Research Institute
1617 Cole Boulevard
Golden, Colorado 80401

10. Project/Task/Work Unit No.

3533.35

11. Contract (C) or Grant (G) No.

(C)

(G)

12. Sponsoring Organization Name and Address

13. Type of Report & Period Covered

Technical Paper

14.

15. Supplementary Notes

16. Abstract (Limit: 200 words)

This paper presents the major efforts of the subcontracted research studies of the Wind Energy Innovative Systems Program supported by the Solar Energy Research Institute. Eleven of the 17 studies funded are R&D studies that consider potentially cost-effective innovative concepts. Highlights of these concepts are discussed.

17. Document Analysis

a. Descriptors Wind Power ; Wind Turbines ; Tornado Turbines ; Vertical Axis Turbines ; EFD Wind Generators ; Vortex Augmented Turbines ; Vanes ; Diffuser Augmented Turbines ; Performance Testing

b. Identifiers/Open-Ended Terms

c. UC Categories

18. Availability Statement

National Technical Information Service
U.S. Department of Commerce
5285 Port Royal Road
Springfield, Virginia 22161

19. No. of Pages

26

20. Price

$4.50

Form No. 8200-13 (6-79)