NREL/TP-411-6264 • UC Category: 270 • DE94000295

Automated Solar Cell Assembly Teamed Process Research

Semiannual Subcontract Report 7 January 1993 – 30 June 1993

M. J. Nowlan, S. J. Hogan, G. Darkazalli,
W. F. Breen, J. M. Murach,
S. F. Sutherland
Spire Corporation
Bedford, Massachusetts

NREL technical monitor: H. Thomas

National Renewable Energy Laboratory
1617 Cole Boulevard
Golden, Colorado 80401-3393
A national laboratory of the U.S. Department of Energy
Operated by Midwest Research Institute
for the U.S. Department of Energy
under contract No. DE-AC02-83CH10093

Prepared under Subcontract No. ZAG-3-11219-01-105658

February 1994

MASTER

DISTRIBUTION OF THIS DOCUMENT IS UNLIMITED

NOTICE

NOTICE: This report was prepared as an account of work sponsored by an agency of the United States government. Neither the United States government nor any agency thereof, nor any of their employees, makes any warranty, express or implied, or assumes any legal liability or responsibility for the accuracy, completeness, or usefulness of any information, apparatus, product, or process disclosed, or represents that its use would not infringe privately owned rights. Reference herein to any specific commercial product, process, or service by trade name, trademark, manufacturer, or otherwise does not necessarily constitute or imply its endorsement, recommendation, or favoring by the United States government or any agency thereof. The views and opinions of authors expressed herein do not necessarily state or reflect those of the United States government or any agency thereof.

Printed in the United States of America
Available from:
National Technical Information Service
U.S. Department of Commerce
5285 Port Royal Road
Springfield, VA 22161

Price: Microfiche A01
Printed Copy A03

Codes are used for pricing all publications. The code is determined by the number of pages in the publication. Information pertaining to the pricing codes can be found in the current issue of the following publications which are generally available in most libraries: *Energy Research Abstracts (ERA)*; *Government Reports Announcements and Index (GRA and I)*; *Scientific and Technical Abstract Reports (STAR)*; and publication NTIS-PR-360 available from NTIS at the above address.

Printed on recycled paper

DISCLAIMER

Portions of this document may be illegible electronic image products. Images are produced from the best available original document.

TABLE OF CONTENTS

		Page
1	INTRODUCTION	1
2	TECHNICAL DISCUSSION	3
	2.1 Assembly Process Time Budget	3
	2.2 Process Flow Chart	3
	2.3 Program Tasks	3
	2.3.1 Task 1 - Design Definition	3
	2.3.2 Task 2 - Cell Loading Process Development	4
	2.3.3 Task 3 - Cell Alignment Process Development	9
	2.3.4 Task 4 - Interconnect Ribbon Handling Process Development	11
	2.3.5 Task 5 - Solder Flux Application Process Development	16
	2.3.6 Task 6 - Ribbon to Cell Solder Process Development	19
	2.3.7 Task 7 - Cell String Handling Process Development	21
	2.3.8 Task 9 - Process Subassembly Design	23
	2.3.9 Task 12 - Information Dissemination	23
	2.4 Thin Solar Cells	24
3	CONCLUSIONS	25
4	REFERENCES	27

APPENDIX A - ASSEMBLY PROCESS TIME BUDGET

APPENDIX B - WAFER HANDLING EQUIPMENT - VENDOR SURVEY

LIST OF ILLUSTRATIONS

		Page
1	Concept for an automated solar cell tabbing and interconnecting system.	1
2	Project team organization, PVMaT Phase 3A for Automated Solar Cell Assembly Teamed Process Research	2
3	Process flow chart, solar cell assembly system	4
4	Solar cell loading options	6
5	Preliminary lay-out of cell loading and alignment systems	9
6	Xerox image of a Solec cell	10
7	Components of the ribbon and cell handling system	12
8	Photograph of part of the interconnect handling system	14
9	Ribbon clamp and form assembly	15
10	Ribbon cutter assembly with blades in the open position	16
11	Ribbon shuttle assembly with grippers open	17
12	Prototype ribbon flux coating subassembly with interconnect ribbon reel	17
13	Cells after soldering and pull test	18
14	Dual roller flux coating subassembly	20
15	Two lamp solder head assembly	21
16	Cell string conveyor assembly	22

LIST OF TABLES

		Page
I	PV module manufacturers' requirements for cell interconnecting	5
II	Cell loading with r-θ-z robot running at maximum rated speeds	7
III	Alignment process steps	10

SECTION 1
INTRODUCTION

This is the first Semi-Annual Technical Progress Report for the program titled "Automated Solar Cell Assembly Teamed Process Research," funded under National Renewable Energy Laboratory (NREL) letter subcontract No. ZAG-3-11219-01-105658. A definitized subcontract was signed in July, 1993. This report describes the work done in the period from January 7, 1993 to June 30, 1993.

This program is part of the Photovoltaic Manufacturing Technology (PVMaT) project, Phase 3A, which addresses problems that are generic to the photovoltaic (PV) industry. Crystalline silicon solar cells were used in the great majority (87%) of all terrestrial power modules shipped in 1992.[1] Spire's analysis in Phase 1 of the PVMaT project indicated that the use of thin (≤200 μm) silicon cells can substantially reduce module manufacturing costs, provided that processing yields remain as high as they are now for processing standard thickness cells.[2] Since present solar cell tabbing and interconnecting processes have unacceptably high yield losses with such thin cells, the objective of this Phase 3A subcontract is to use Spire's light soldering technology and experience in designing and fabricating solar cell tabbing and interconnecting equipment to develop high yield, high throughput, fully automated processes for tabbing and interconnecting thin cells. An artist's concept of this processing system is provided in Figure 1.

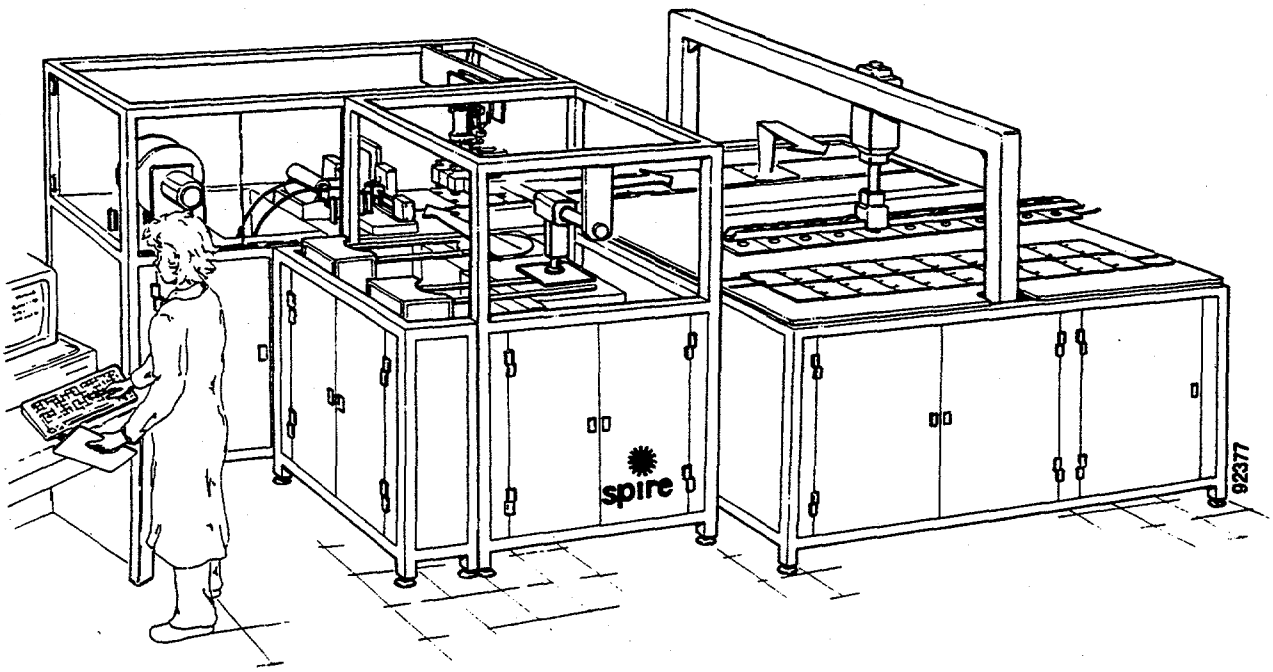

Figure 1 *Concept for an automated solar cell tabbing and interconnecting system.*

Areas that are being addressed in this effort include processing rates, process control, yield, throughput, material utilization efficiency, and increased use of automation. Spire is teaming with Solec International, a PV module manufacturer, and the University of Massachusetts Lowell's Center for Productivity Enhancement (CPE), automation specialists, who are lower-tier subcontractors. A number of other PV manufacturers, including Siemens Solar, Mobil Solar, Solar Web, and Texas Instruments, have agreed to evaluate the processes developed under this program. A program organization chart is provided in Figure 2.

The definitized subcontract will consist of two one-year phases. Phase I will cover efforts from January 7, 1993 to December 31, 1993. Phase II will coincide with calendar year 1994.

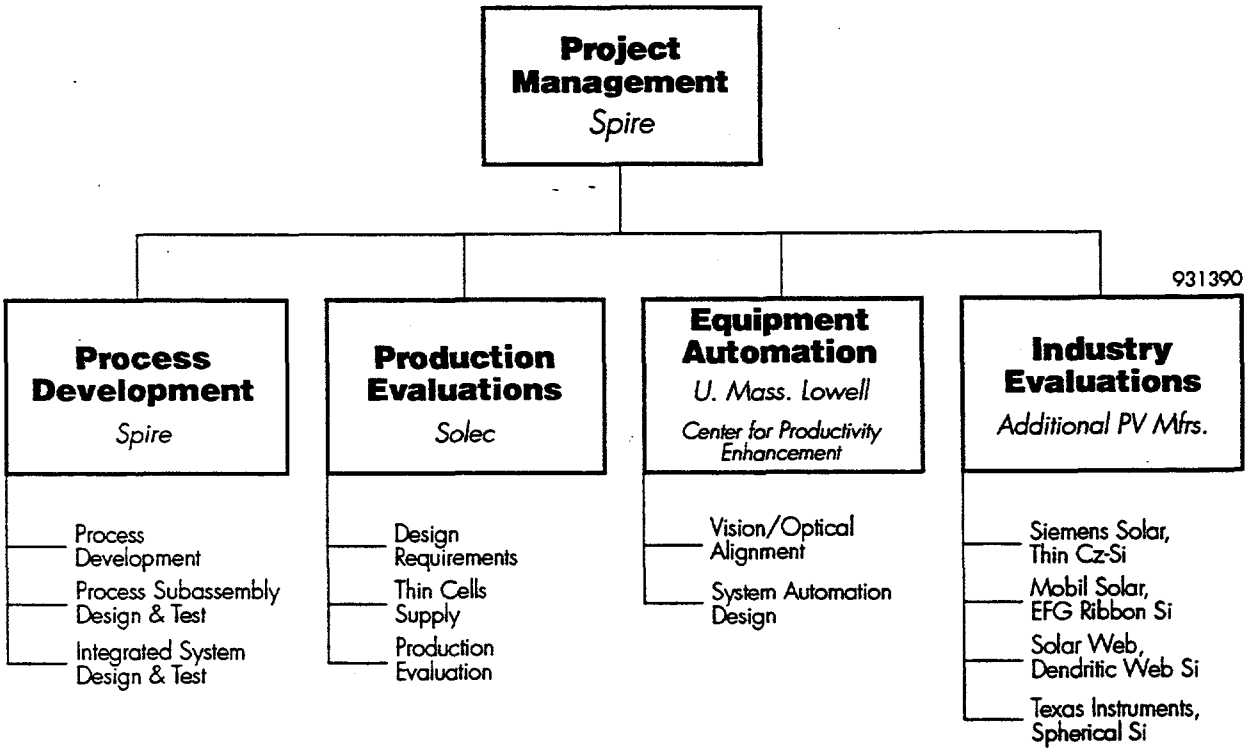

Figure 2 *Project team organization, PVMaT Phase 3A for Automated Solar Cell Assembly Teamed Process Research.*

SECTION 2
TECHNICAL DISCUSSION

Spire's objective in this program is to develop high throughput (5 MW/yr) automated processes for interconnecting thin (200 μm) silicon solar cells. This section describes the process time budget, the process flow chart, and work completed on each task from January 1993 through the end of June 1993.

2.1 Assembly Process Time Budget

An assembly process time budget has been created as an aid in identifying process bottlenecks or areas that may need attention to maximize system throughput. The time budget, provided as Appendix A, is presently in draft form, in which the step times entered are our current best estimates. Once the processes have been developed and demonstrated, actual measured times will be entered for each step.

Seven tasks have been identified that must satisfy the time budget. Each task is a repetitive process comprising a number of steps that must be completed within the cycle time allowed for processing a cell. To achieve high throughput, a four second per cell cycle time has been set as the nominal goal. This throughput is approximately twice as fast as Spire's current cell tabbing system, the SPI-TAB™ 1000.

2.2 Process Flow Chart

A preliminary process flow chart has been prepared to illustrate the flow of materials (cells and copper ribbon material) through the system. The chart, shown in Figure 3, includes some optional steps which might not be included in the final system. For example, solder paste dispensing will not be needed if the interconnect ribbons can be coated with flux.

2.3 Program Tasks

2.3.1 *Task 1 - Design Definition*

Spire personnel met with their lower-tier subcontractor, Solec International, to determine the specific, detailed requirements of Solec's module manufacturing line. S. Hogan and M. Nowlan of Spire visited S. Olah and S. Everts at Solec in Hawthorne, CA, on March 4, 1993. Spire's initial concepts for manufacturing interconnected assemblies of thin (200 μm) crystalline Si solar cells were presented. Solec provided detailed input on their cell assembly requirements, including cell sizes, tab materials and geometries, solder flux, string lengths, required process yield, etc. Cell interconnection is currently an entirely manual operation at Solec.

Spire engineers also met with other PV module manufacturers to ensure that the processes developed in this program will meet the specific needs of as many manufacturers as possible. S. Hogan and M. Nowlan met on March 5 with T. Jester and S. Vasquez at Siemens Solar Industries in Camarillo, CA, on April 6 at Spire with D. Harvey of Mobil Solar, Billerica, MA, and on April 28 at Spire with B. Felder and R. Meyer of Texas Instruments, Dallas, TX.

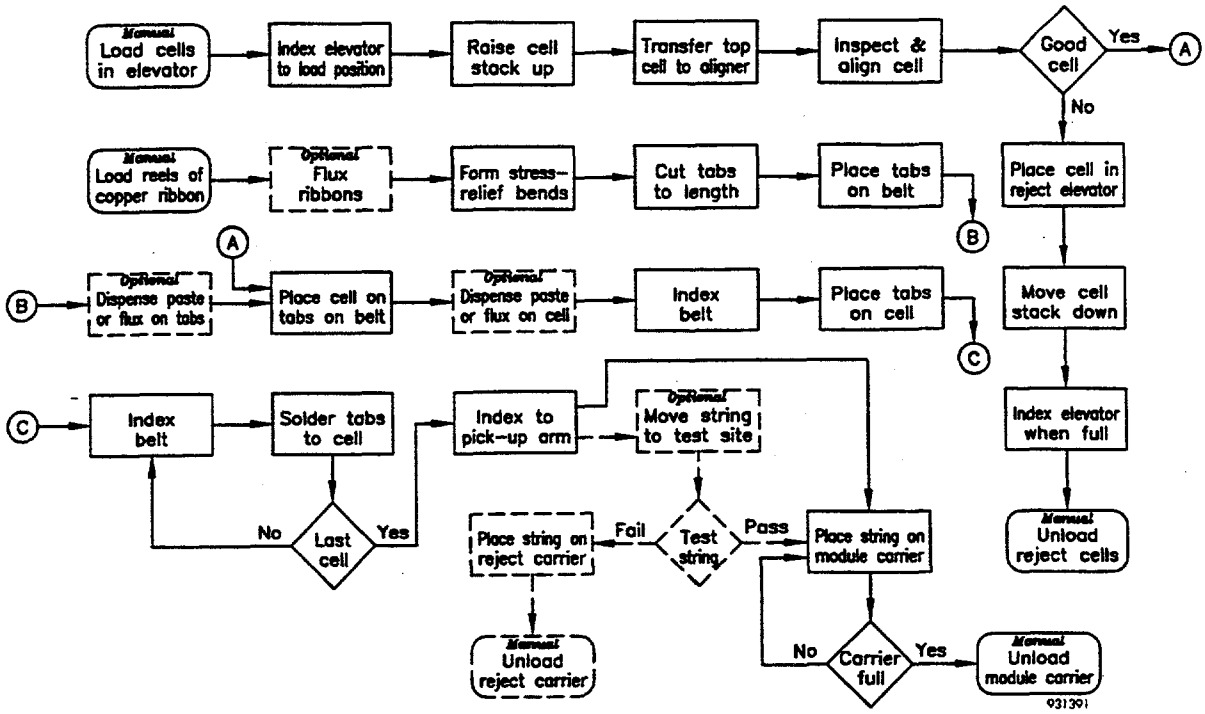

Figure 3 *Process flow chart, solar cell assembly system.*

As with Solec, Spire presented its concepts in detail and the manufacturers provided their specific manufacturing requirements for interconnecting thin crystalline Si solar cells. The information obtained from Solec, Siemens, Mobil, and TI is being used by Spire to develop cell stringing processes that are compatible with the majority of photovoltaic module manufacturers, and that can be inserted in Solec's production line for processing evaluations in Phase II. This information on PV manufacturers' requirements is summarized in Table I.

One significant recommendation which came out of these discussions is to add an in-line string I-V test to the process, after string fabrication and prior to string placement on the module carrier, as a quality control measure. Spire and NREL have agreed to add two new tasks (Tasks 8 and 13) to the program to implement this in-line test.

Task 1 is now completed.

2.3.2 *Task 2 - Cell Loading Process Development*

A process for automatically loading thin cells with high throughput is being developed under this task. A vendor survey was done to determine the availability of wafer handling equipment in the commercial marketplace. Information on wafer handling, wafer transport, and cassette handling systems was obtained and reviewed. A list of vendors was compiled which summarizes the types of products offered. The list is provided as Appendix B.

Table I *PV module manufacturers' requirements for cell interconnecting.*

Category	Parameter	Requirements
Solar cell characteristics	Cell shapes Maximum cell size Cell thickness Loading arrangement	Round, square, "sqround", rectangular 10 to 13 cm square 200 to 450 µm Coin stack, two for continuous feeding
Interconnect ribbon characteristics	Material Width Thickness Coating No. of ribbons/cell	Copper, OFHC or ETP 1.5 to 2.5 mm 50 to 125 µm $Sn_{60}Pb_{40}$ or Sn 2
Solder flux or paste requirements	Flux Paste	Low-solids "no clean" flux used with thick (12 µm) SnPb coating on ribbon "No clean" SnPbAg paste used with thin (1.6 µm) SnPb coating on ribbon
Other requirements	Maximum string length Throughput Minimum yield Minimum system uptime Post soldering inspection	2.0 m 4 to 5 s/cell 98% to 99% 75% to 80% in 3-shift 7-day operation Highly desirable

After reviewing the product literature, meetings were held with representatives from those companies whose handling systems seemed to be best suited for this application. Engineers from Design Technology of Billerica, MA, Monadnock Automated Design of Spofford, NH, Proconics International of Wilmington, MA, and Affiliated Manufacturers, Inc. (AMI), of North Branch, NJ, visited Spire. Extensive telephone discussions were held with Cybeq Systems of Menlo Park, CA. Spire engineers also visited Precision Robots, Inc. of Billerica, MA, and Brooks Automation of Lowell, MA.

As a result of these discussions and evaluations, four general types of loading systems were defined, as illustrated in Figure 4. Option A has a linear pick-and-place mechanism with x and z motions to pick cells up from a stack elevator and place it at the aligner. Two cell stacks are mounted on a linear shuttle which transports the stacks to the elevator. Option B is similar to option A except the linear shuttle is replaced with a rotary table. Option C uses an r-θ-z robot to transfer cells from fixed stacks to the aligner. In this case, no elevator is required, since the robot has sufficient z travel. Option D has a rotary pick-and-place mechanism (θ and z motions) and a linear shuttle for cell stacks similar to option A.

Slotted cassette unloading systems, commonplace in the semiconductor industry, have been eliminated from consideration in favor of cell stack unloaders. The ability of solar cells to tolerate stacking without yield or performance degradation and the processing of cells in high

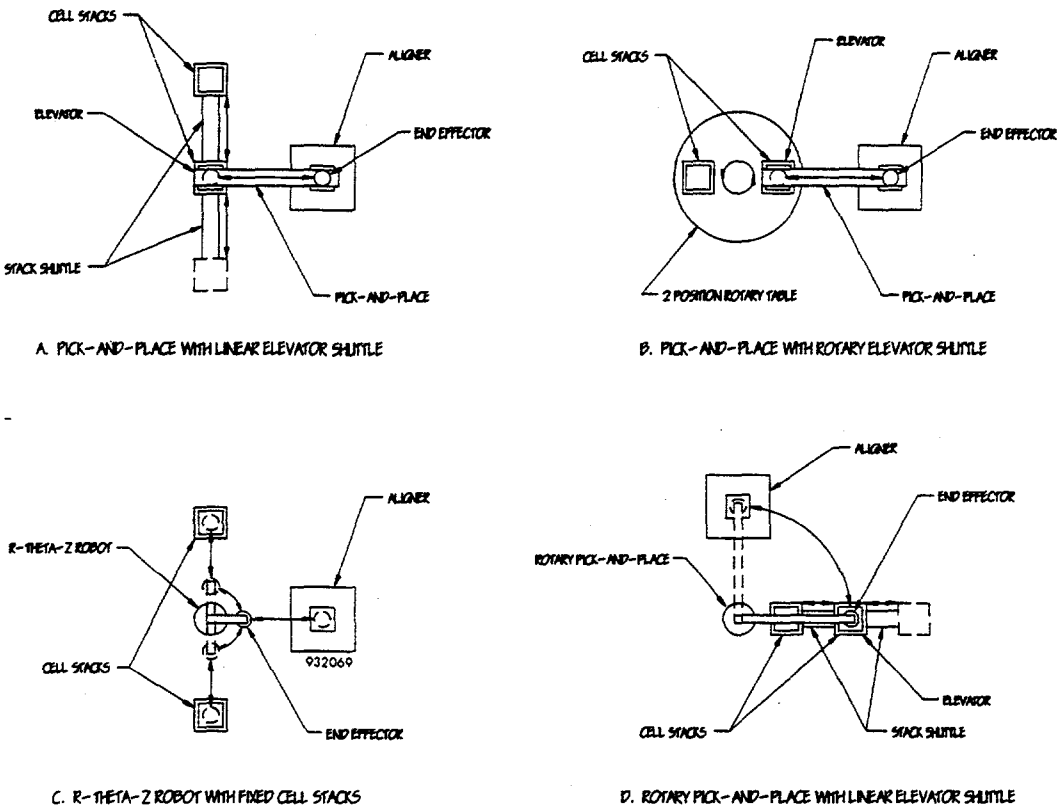

Figure 4 *Solar cell loading options.*

volumes, on the order of millions per year, encourages PV module manufacturers to handle cells in a stack format to minimize the volume of space taken up by cells in process. For example, a typical cassette[3] for holding twenty-five 100 mm square wafers has overall dimensions of 14.3 cm by 12.3 cm by 11.4 cm. A stack carrier of the same dimensions can hold a stack of cells 13 cm high, equivalent to 650 cells with a thickness of 200 μm, or 26 times the number of cells in the same volume.

All four options (labeled A through D) have the capacity to hold two stacks of cells to allow the operator to manually load a stack of cells while the system is automatically feeding from another stack. Thus the loading process can proceed indefinitely without interruptions, resulting in increased product throughput.

The r-θ-z robot approach (option C) is a commonly used method for wafer handling in the semiconductor processing industry. In that industry, speed is a secondary consideration to cleanliness (minimum particulate generation) and sometimes other special factors, such as vacuum compatibility. These robots are highly flexible and programmable in their range of motion. For example, the Cybeq r-θ-z robot could be an elegant cell loading system, since it eliminates all other loading process mechanisms (elevator and shuttle mechanisms). Its flexibility in motion exacts a price in throughput, however, since nearly all of its motions must be done in series. As shown in Table II, the process required to load a cell requires 11 separate motions calculated to take 4.2 seconds per cell, using the robot's *maximum* speeds in all three axes and allowing one second for picking a cell from the top of a stack. Five to six seconds is a more realistic estimate

for the cycle time, given that the motions cannot be expected to run at the maximum speed through the full range of motion. Since this cycle time is too slow to meet our four second per cell throughput goal, the r-θ-z robot approach has been eliminated from consideration.

Table II *Cell loading with r-θ-z robot running at maximum rated speeds.*

Step	Description	Time (s)	Comments
1	Move down 9 cm (3.5"), z	0.25	Average distance for 18 cm (7") stack
2	Pick up cell with vacuum	1.00	
3	Move up 9 cm (3.5"), z	0.25	Average distance
4	Move in 16 cm (6.5"), r, during up motion	0.29	Maximum cell size plus clearance: 0.54 s total
5	Rotate 90°, θ	0.28	
6	Move out 16 cm (6.5"), r	0.54	Position cell over aligner
7	Move down 0.6 cm (0.25"), z, and release cell	0.60	Place cell on aligner
8	Move up 0.6 cm (0.25"), z	0.10	
9	Move in 9 cm (3.5"), r	0.29	For 7.6 cm (3") end effector
10	Rotate 90°, θ	0.28	
11	Move out 9 cm (3.5"), r	0.29	
	Total at maximum rated speeds	4.19	r_{max}= 30 cm/s, θ_{max}= 320°/s, z_{max}= 35 cm/s
	Estimated total at realistic speeds	5.0 to 6.0	

Options A, B, and D are all expected to be faster than option C since the cell stack vertical motion is done concurrently with the cell pick-and-place operation. A version of option D is commercially available from AMI. This system, called a dual stack magazine loader, is typically used to load ceramic substrates into screen printers for hybrid circuit or surface mount applications. It includes an air pad pick-up that uses the Bernoulli effect to pick up the top cell from a stack. AMI loaned an air pad to Spire which was used to evaluate its effectiveness with stacks of thin cells. These tests at Spire showed that the Bernoulli pick up will probably work with thin cells, although the unit consumes a large amount of compressed air and a compliant mounting system is required.

The AMI throughput rating of 1200 parts per hour (3 s/cell) may not be achievable with thin cells, but it should be able to meet the four seconds per cell requirement. However, the

largest cell size which the standard system can handle is 11.4 cm (4.5 inch) square, smaller than our requirement of 15 cm (6 inch) square. As a result, the AMI system is not acceptable.

The stack loader which Spire designed and builds for its SPI-TAB™ 1000 tabbing machine was also evaluated for use in this program. The loader has a single elevator with multiple shelves for cell stacks and an optical sensor to maintain the proper stack height. A rotary pick-and-place arm (θ and z motions) with vacuum cups picks up cells from the top of the stack. A compressed air jet and a cell flexer (which slightly bends the top cell as it is being picked up) are used to separate the top cell from those under it in the stack, since quickly picking up a cell creates a temporary low pressure region under the cell which tends to lift additional cells in the stack, especially if they are thin.

While this loader works well and has a number of good features (the optical stack height sensors, the air jet, and the cell flexer), it has not been selected for use in its present form because two aspects can be improved to maximize throughput. Firstly, the present system has only one elevator, which requires that the machine be interrupted for inserting cell stacks into the elevator. Secondly, the air driven rotary pick-and-place arm has a tendency to bounce at the end of travel when operating at high speeds.

Since no system has been found which satisfies all the requirements for this application, Spire will design a custom system for loading cells. Option A was selected over option B because the linear stack shuttle is a simpler mechanism than the rotary shuttle. The current status of the loading system is as follows.

- Air actuated linear slides with ball bushings were selected and ordered for moving the cell in x and z axes. Hydraulic cushions will allow higher speed operation by reducing end-of-stroke vibrations.

- A vacuum pick-up end effector with a mechanically floating mount has been designed to minimize stress on the thin cells during pick up and placement. A flexible bushing will be used for compliance in potential out-of-plane conditions between the cell stack and the vacuum end effector. Components have been submitted for fabrication in the machine shop and for purchase.

- An optical stack height sensor and a linear electric cylinder (lead screw type) will be selected for the elevator. Air jets will be designed to separate the top cell from the others in the stack.

- Quick-release stack carriers will be designed for inserting stacks on the shuttle mechanism. An air driven linear slide will be designed to shuttle two stacks back and forth.

- Position sensors will be provided on all mechanisms for proper motion control. A frame will be designed for supporting all of the components.

A preliminary lay-out of the cell loading system and the part of the aligner system is provided in Figure 5.

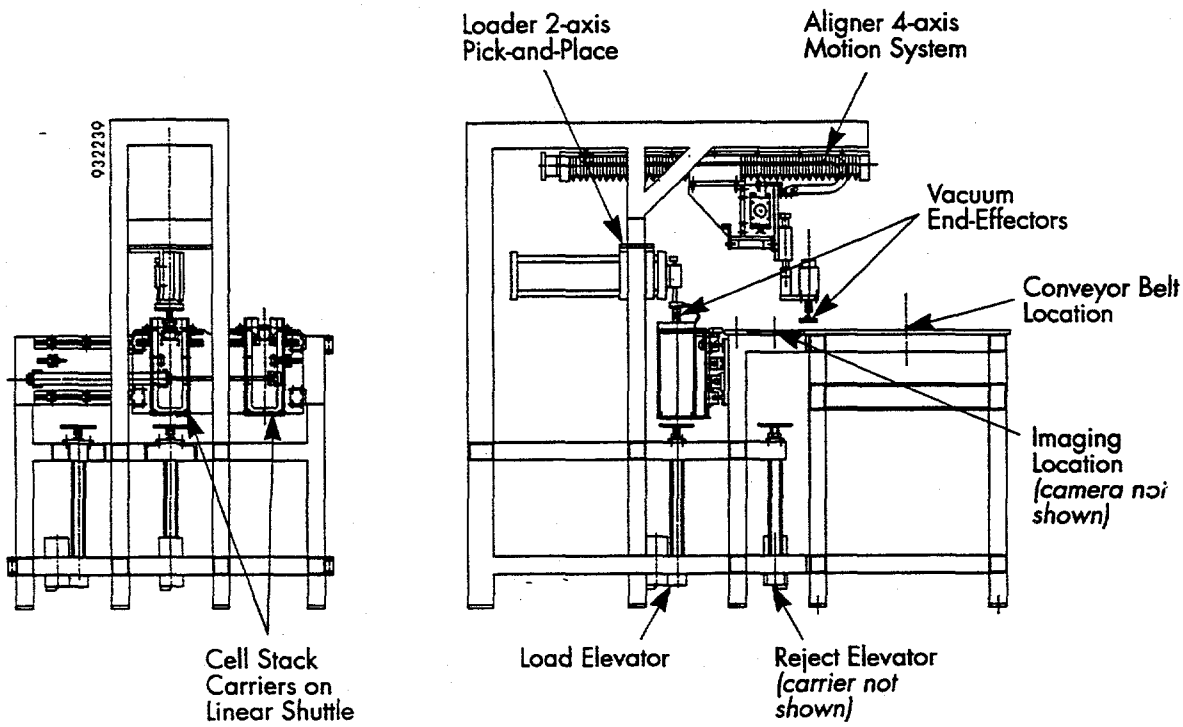

Figure 5 *Preliminary lay-out of cell loading and alignment systems.*

2.3.3 *Task 3 - Cell Alignment Process Development*

Spire engineers have had several meetings with Dr. Joseph Milstein and Mr. Charles Kosta from U-Mass Lowell's Center for Productivity Enhancement. The cell alignment process has been discussed in detail, as the CPE will take the lead in developing the cell alignment process subsystem. As a result of these discussions, a preliminary alignment process algorithm has been established. The process steps are listed in Table III.

The ease with which an optical pattern recognition system can discriminate between a cell's metal grid pattern and the un-metallized silicon can be demonstrated with a very simple test: making a xerox image of a cell. A photocopy of a Solec cell is provided in Figure 6 as an example. The test shows that with the proper lighting a very high contrast image can be recorded. This contrast is a natural outcome of the need to absorb sunlight between the grid lines (which leads manufacturers to incorporate anti-reflection coatings and/or texturized light-trapping

surfaces) and the reflective properties and smooth surfaces of the contact metal. High contrast will make it easy to grab a two dimensional bit map image of the cell where pixels are either on, due to contact reflection, or off, due to silicon absorption.

Table III *Alignment process steps. Motion directions are in parentheses.*

Step	Description
1	Acquire cell image
2	Process image to locate and inspect cell
3	Move vacuum end effector to cell center (x, y)
4	Pick up cell (z)
5	Align and transport cell to conveyor belt or reject elevator (x, y, θ)
6	Place cell on conveyor or reject elevator (z)
7	Return vacuum end effector to home (x, y, θ)

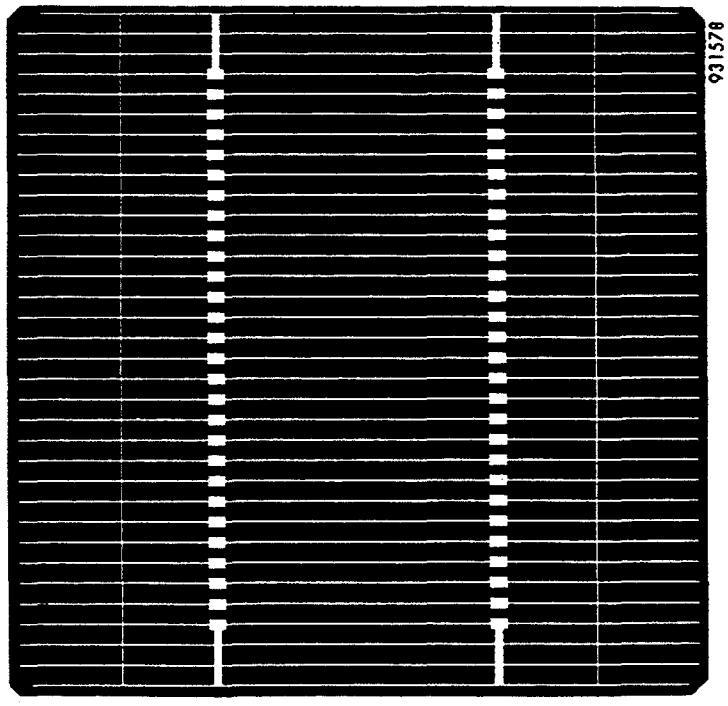

Figure 6 *Xerox image of a Solec cell.*

Essentially all terrestrial silicon cells have contact patterns that contain two linear and parallel bus regions connected by narrower grid lines. J. Milstein has conceived a mathematical algorithm for aligning such patterns that will rapidly compute the center of a cell's contact pattern and the pattern's angular position. In general, this is the only information needed to align the cell. A vacuum pick-up end effector mounted on a four axis motion control system will then move in x-y to the center of the pattern, pick up the cell, and simultaneously rotate the cell while moving it in x-y to place it in the proper position on the cell string conveyor.

A four axis (x-y-z-θ) motion system for aligning and transporting cells has been selected. The system will be custom fabricated by a vendor to meet our specifications. Spire will attach a vacuum pick-up end effector with the same design as the one used to pick up cells from the load elevator, except that the flexible coupling will be replaced with a rigid coupling to improve the alignment accuracy. The loading system will place a cell face down on a glass plate. A camera and a lamp will be mounted underneath to obtain an image of the cell's front contact. A video board will capture the image for analysis.

The cell's position for imaging is located centrally between the reject elevator (y direction) and the cell string conveyor (x direction). This design reduces the amount of travel time needed to move the cell from the aligner to the conveyor and return the end effector. X and y motions will be stepper motor driven lead screw assemblies, z will be air actuated, and θ will be stepper motor driven. The stepper for θ has 0.18° resolution (2000 counts per revolution) which is expected to be sufficient. If testing indicates that greater accuracy is needed, 10:1 and 18:1 ball reducers are available. Open frame controllers which communicate via RS232 ports have been selected for the three stepper motors (x, y, and θ) instead of more expensive fully packaged controllers with control panels.

2.3.4 *Task 4 - Interconnect Ribbon Handling Process Development*

The mechanical design of processing subassemblies for ribbon handling, bending, and cutting has been completed. A drawing which labels the important components of the ribbon handling system is provided in Figure 7. These components are the ribbon reel assembly, the flux station (which includes the ribbon drive assembly), the ribbon accumulators, the ribbon clamp and form assembly, the ribbon cutter, and the ribbon shuttle assembly.

As part of the initial design work, a story board was created in AutoCad to illustrate the sequence of events needed to produce a string of soldered solar cells. The story board aided in the development of the ribbon handling system by ensuring that the system mechanisms will be able to execute all of the processes needed to produce cell strings. The sequence illustrated by the story board is as follows:

> The ribbon shuttle, a pair of air actuated mechanical grippers mounted on linear motors, pulls two interconnect ribbons a distance at which a stress-relief bend is formed in each ribbon. The ribbons are pulled again to a position at which they are cut (cut ribbons are referred to as tabs). The tabs are then pulled to place them in the desired location. Linear motors have been selected to provide rapid, precise, and programmable positioning of the ribbon.

A vacuum conveyor belt holds the left ends of the tabs while the grippers open and retract to the right, dropping the tabs' right ends onto the belt. The grippers then move left to acquire the ribbons for the next pair of tabs; at this time a cell is placed in the first cell position, on top of the first set of tabs. The vacuum conveyor indexes the cell and tabs the length of one cell plus the gap between cells. The ribbon forming, cutting, and placing process is repeated, with the right half of the second pair of tabs placed over the first cell, and the left half placed on the vacuum belt.

The cell placement, cell indexing, tab fabrication, and tab placement processes are repeated as needed to build up a string of any desired length. When a cell is in its third location on the vacuum conveyor it is soldered to both the top and bottom tabs in one step.

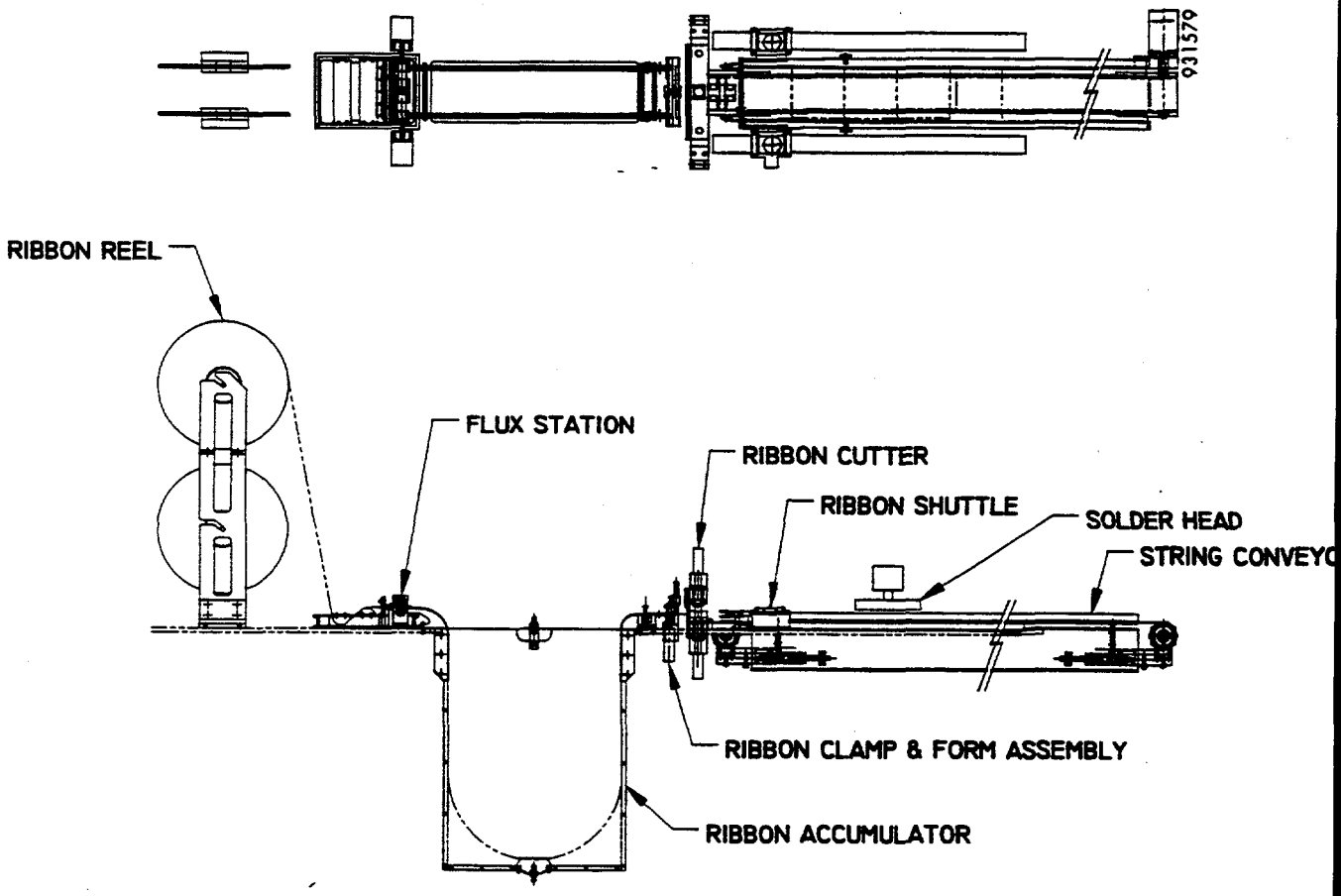

Figure 7 *Components of the ribbon and cell handling system.*

As a result of discussions with a copper ribbon supplier, the ribbon reel assembly design was modified to increase the reel diameter capacity from 30 cm (12 inch) to 38 cm (15 inch). This increase will lengthen the interval between reel changes by approximately a factor of two. The interval is a function of reel diameter, machine throughput (cells per second), cell size (length of ribbon across the front and back of the cell), spacing between cells, and ribbon thickness (since more thin ribbon will fit on a given diameter reel). For example, assuming a 4 s/cell throughput, 102 mm cells, 2 mm spacing, 75 µm thick copper ribbon, and 12 µm thick solder plating, a 30 cm diameter reel will last approximately 2 hours and 10 minutes, while a 38 cm diameter reel will last approximately 4 hours and 20 minutes.

The ribbon reel assemblies were designed in May. Component fabrication and assembly is scheduled for early July. Each of the two reel assemblies (left and right) supports two stock reels (upper and lower) to allow ribbon splicing from the trailing end of ribbon from an empty reel to the leading end of ribbon from a full reel. While the splicing operation will be manual, it eliminates the time consuming manual threading operation which would otherwise be required whenever a reel empties. Referring to Figure 7, the operation would require threading ribbon through the flux bath, drive rollers, accumulator, clamp and form assembly, and ribbon cutter.

The ribbon accumulator assembly design was completed in May and the components were fabricated and assembled in June. As with the ribbon reel assemblies, both a left and a right version were designed. Part of the two accumulators are shown in the foreground of Figure 8. A similar accumulator is used in Spire's SPI-TAB™ 1000 tabbing machine to allow rapid feeding of ribbon onto the cells without rapid rotation of the stock reels. This new version of the accumulator has been lengthened and widened to store more ribbon. The machine can draw upon this ribbon supply for a short period of time while the operator splices a new reel. If the operator is available to make a splice before the accumulator is emptied the machine will continue without interruption.

Four metal proximity sensors are used, two on each accumulator. One sensor is located at the bottom of each ribbon loop to turn off the ribbon drive motor (at the flux station) when the accumulator is full. Another sensor at the top of each accumulator (one is visible in Figure 8) will signal the ribbon shuttle to stop extracting ribbon if the accumulator is empty, a situation that may occur, for example, if the operator is not available to splice in a new reel of ribbon. In addition, optical sensors have been selected for indicating when a reel has run out of ribbon. Two sensors, one for each ribbon path, will be mounted between the flux station and the ribbon reels. When a reel empties, the sensor will signal the ribbon drive motor to stop feeding ribbon into the accumulator and signal the operator splice in a new reel.

An additional, more sophisticated optical sensor has been selected for sensing the presence of a splice. Two of these sensors are mounted at the exits of the accumulators in Figure 8. They direct the ribbon handling system to automatically cut off the spliced section and deposit it in a "trash bin". These sensors will also be useful in detecting defects such as kinks in the ribbon material. The sensors were bench tested at Spire in the following manner. A hand-soldered ribbon splice was made by overlapping two solder coated interconnect ribbons and heating them with a soldering iron. No flux was used since there is solder on both parts. The spliced ribbon was pulled through the sensor several times and the splice was reliably detected.

932062

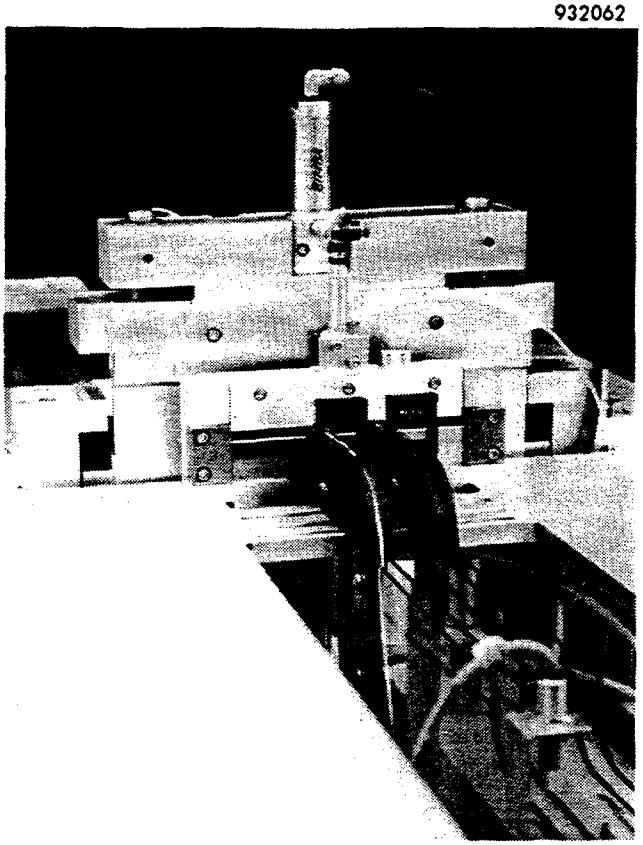

Figure 8 *Photograph of part of the interconnect handling system. From foreground to background: the accumulators, the splice sensors, the clamp and form assembly, and the ribbon cutter.*

The ribbon clamp and form subassembly, also seen in Figure 8, was designed and fabricated in April. A lay-out drawing is provided in Figure 9. The ribbon forming section produces a stress-relief bend in the two interconnect ribbons. A metal die machined with the shape to be transferred to the ribbon is driven upwards by an air cylinder against an elastomeric pad. Initially designed with a urethane pad, ribbon forming tests showed that the ribbons were not obtaining the full die shape, an indication that the urethane pad is too hard. The pad was replaced with a length of lower durometer fluoroelastomer O-ring material seated in a captive groove. Testing showed that the O-ring material transfers the metal die shape to the ribbon very well. The groove design makes maintenance or replacement of the elastomer trivial.

The clamp section of the clamp and form subassembly holds the two interconnect ribbons while they are being cut to prevent them from falling under their own weight into the accumulator. The small air cylinder on top of the clamp and form subassembly (Figure 9) actuates the clamp.

The ribbon cutter assembly is used to cut the two interconnect ribbons to length. The initial concept had two sets of cutting blades (one set for each ribbon) mounted on horizontal slides so they could retract away from the path of the grippers on the ribbon shuttle assembly.

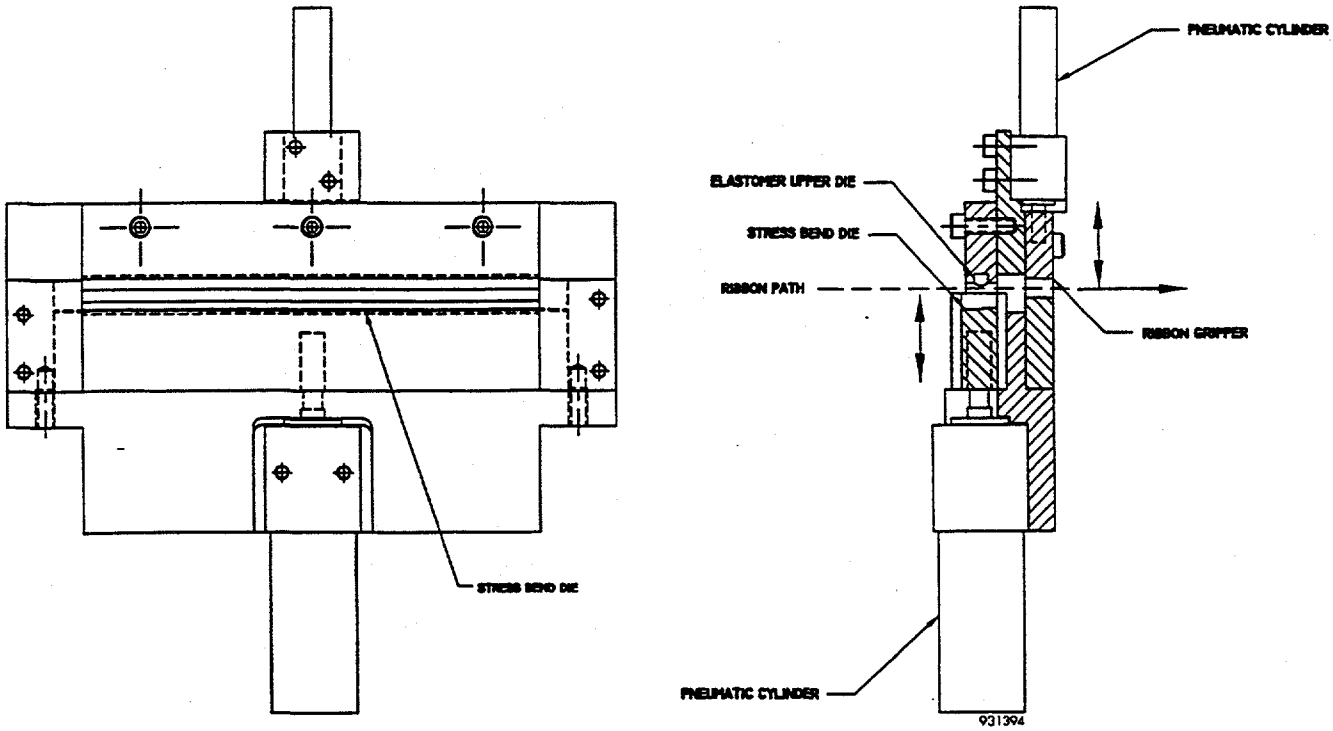

Figure 9 *Ribbon clamp and form assembly.*

The final design eliminates the horizontal motion by using a single large blade set for both ribbons, thereby simplifying the mechanism and increasing its speed. Both blades move vertically away from the ribbon after cutting to provide clearance for the ribbon shuttle. The upper and lower blades are mounted on ball bushings and are driven by air cylinders. The assembly is shown in Figure 10 and in the background of Figure 8.

The ribbon cutter assembly was designed in April and the components were fabricated and assembled in May. The blades were honed and the air cylinders were installed in June. Bench tests were successful in reliably cutting solder plated copper interconnect ribbon.

The ribbon shuttle assembly uses a pair of programmable linear stepper motors to move end effectors that grip the two interconnect ribbons, thereby determining the tab length, the stress-relief bend position, and the tab placement position. The end effectors are suspended over a conveyor belt on which the tabs and cells are placed for assembly. The motors must work in tandem while being connected mechanically, without racking problems. A vendor of linear motors visited Spire in April to test such mechanically-linked tandem operation prior to committing to this design. Spire fabricated an aluminum plate which was securely bolted to two forcers (moving stages) on two platens (the fixed part of the motor). The motors were then driven through a simulated interconnect feeding cycle at reasonably high speeds, comparable to the speeds we will be required to run in production. No racking, binding, or other problems were observed. Based on the positive results of these tests, a detailed design was completed for the ribbon shuttle assembly, which includes the linear motors, end effectors for gripping the ribbons, various position sensors, and structural elements.

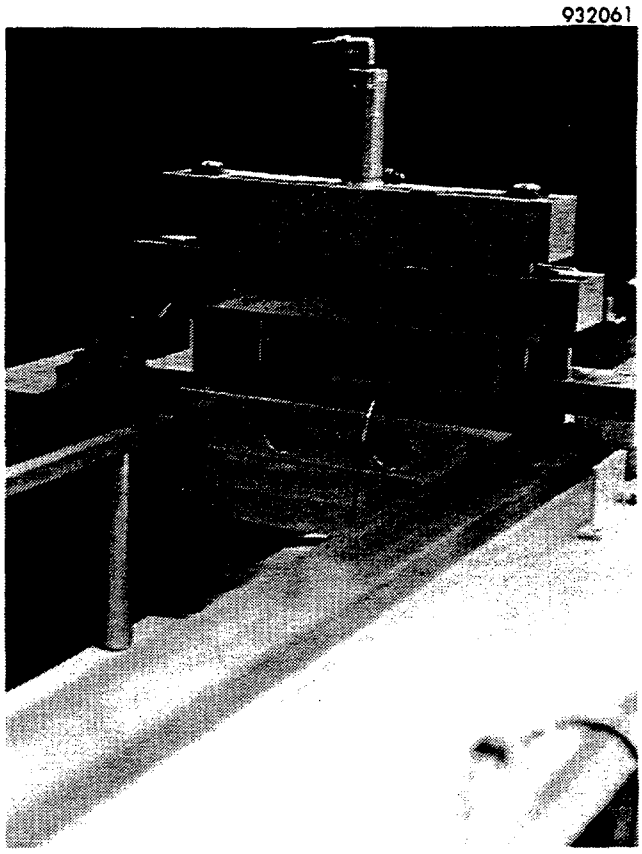

Figure 10 *Ribbon cutter assembly with blades in the open position.*

Components for the ribbon shuttle assembly were ordered and fabricated in May. A specially designed mounting plate was fabricated for attaching the two air actuated ribbon grippers to the linear motors. The grippers, ordered with integral position sensors (to indicate whether the grippers are open or closed), were installed on the mounting plate. The linear motors, drivers, and controllers were delivered to Spire in late June and early July. A photograph of the shuttle assembly is provided in Figure 11.

2.3.5 *Task 5 - Solder Flux Application Process Development*

Applying flux to the solder joint by coating the interconnect ribbon is being investigated. In this process, the ribbon is pulled through a flux bath as it is being fed from the stock reels by a drive roller. In principle, this is a very simple method that adds no process time and minimal mechanism, since ribbon must be fed from reels regardless of whether flux is applied or not. However, testing is needed to determine if it is possible to apply sufficient flux to the interconnect ribbon for reliable soldering without generating unacceptable flux residues on the cells or on the ribbon feed system components.

Components for a prototype interconnect ribbon fluxing subassembly were designed, fabricated, and assembled. A photograph of the assembly and a reel of interconnect ribbon used for preliminary ribbon fluxing trials is shown in Figure 12. The flux used for these tests is Multicore Xersin® 2112, a low solids content, non-corrosive, no-clean flux.

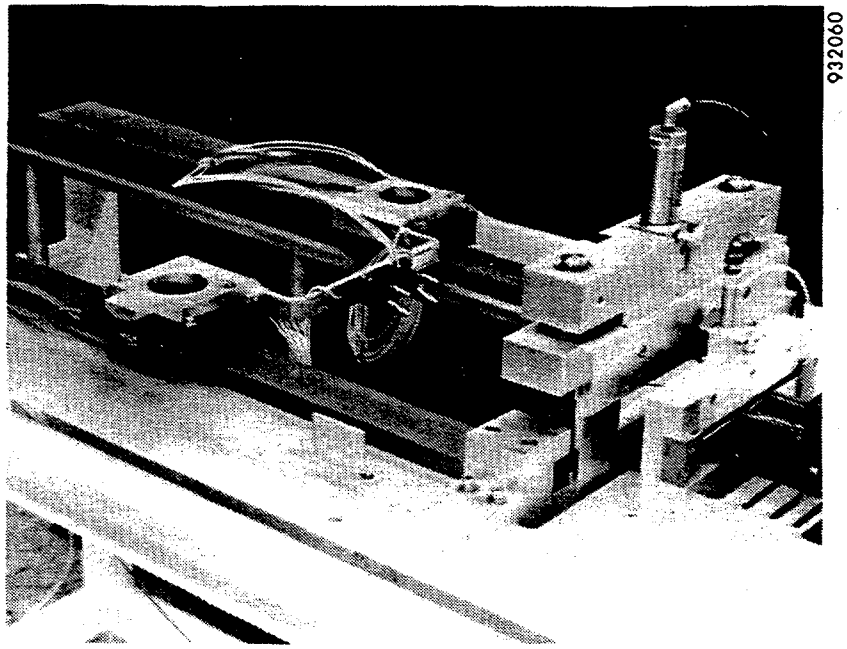

Figure 11 *Ribbon shuttle assembly with grippers open.*

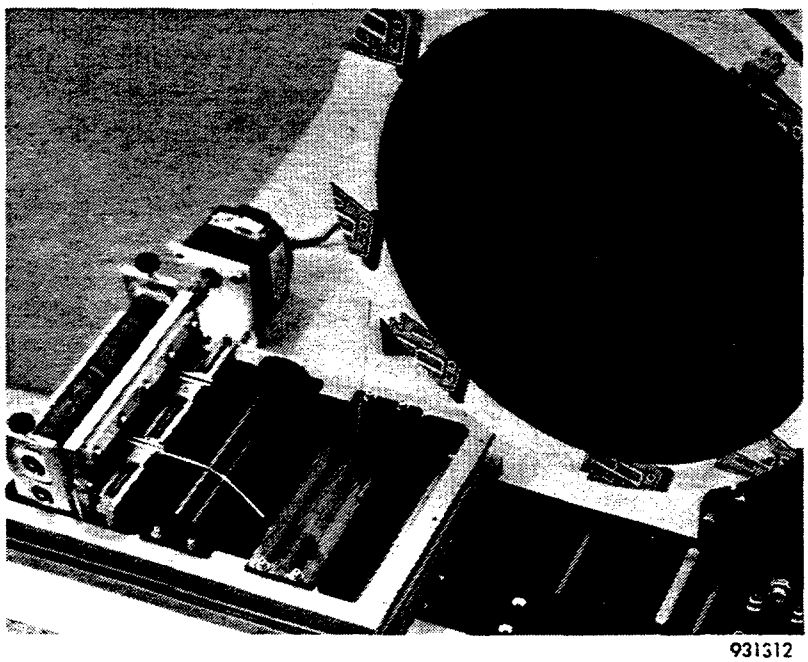

Figure 12 *Prototype ribbon flux coating subassembly with interconnect ribbon reel.*

In the first test, solder plated copper ribbon was pulled from a reel through a flux bath by motor-driven urethane coated rollers. Adjustable roller tension control is provided by a pair of thumbscrews mounted on top of the roller bearing blocks. Two large-radius cylinders with D-shaped cross-sections divert the ribbon through the flux. A squeegee type wiper is used to limit the quantity of flux on the ribbon. Samples of flux coated ribbon were then soldered to a solar cell with a soldering iron without additional flux or solder. The ribbons were then destructively peeled from the cell to examine the solder joint area. One of the specimens from this test is the cell fragment on the left in Figure 13. The photograph shows that a small amount of soldering occurred at one edge of the ribbon, but most of the flux was wiped off of the ribbon surface. This indicates that the squeegee removed too much flux to make adequate solder joints.

The test was then repeated using the same procedure as described above but without the use of the squeegees. In this case, excellent solder joints were produced, as seen on the cell on the right in Figure 13. The solder joint areas cover nearly the full area under the interconnect ribbons and the joints are strong enough to pull silicon out of the wafer. Both the top and bottom of the ribbon soldered equally well.

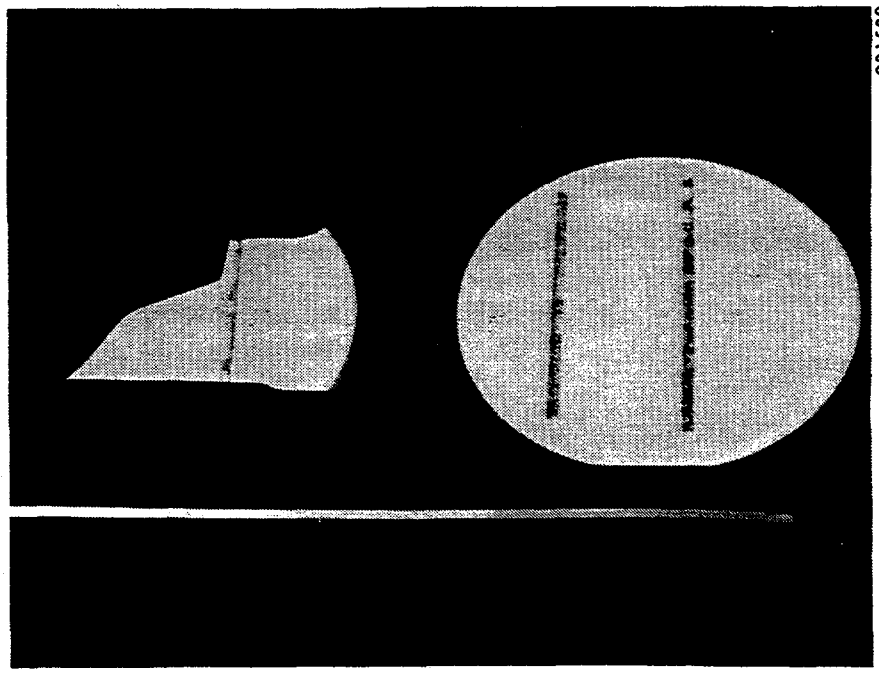

Figure 13 *Cells after soldering and pull test. Left: cell soldered to ribbon dipped in flux and wiped with squeegee. Right: cell soldered to ribbon dipped in flux and not wiped. Bottom: sample of interconnect ribbon.*

A potential problem with the rollers has been observed, however. Without the squeegee, wet flux is deposited on the urethane coated drive rollers, and the ribbon tends to stick to the top roller. One factor that may help to prevent sticking in actual operation is that the ribbon will be weighted down by the length of ribbon in the accumulator, a condition that was not present for these tests. A change to a smooth, low friction roller material, such as DuPont Teflon,® may also help solve the problem. Teflon rollers have been designed and will be fabricated in July. More extensive testing will be done when the ribbon handling systems are assembled together and more automated testing can be done. At that time, the other ribbon handling components (clamp and form assembly, ribbon cutter, grippers, etc.) will also be tested for the possibility of flux build-up and ribbon sticking.

While the preliminary ribbon fluxing tests were done with a single reel of ribbon, in actual operation ribbon will be pulled from two stock reels through the flux bath by two pairs of motor-driven rollers. Thus the flux coating subassembly shown in Figure 12 has been redesigned for dual ribbon capability, as shown in the lay-out drawing provided in Figure 14. The subassembly will be modified in July according to this design, and the Teflon rollers will be installed.

Dispensing alternatives to coating the ribbon with flux are also being investigated. Spire engineers visited Camelot Systems in Haverhill, MA, on April 2. They manufacture automated solder paste and flux dispensing equipment used for hybrid circuit and surface mount applications. The equipment is good quality and very flexible in terms of its motion control programmability, but too slow to meet our requirements. The simultaneous dispensing of multiple dots of paste or flux is necessary to obtain sufficient throughput (4 s/cell).

2.3.6 *Task 6 - Ribbon to Cell Solder Process Development*

Spire will incorporate its light soldering technology for use in this program. A pair of high intensity lamps that emit over a broad spectrum (visible and infrared) provide the radiant energy needed to solder the interconnect ribbons to the solar cells. Conduction pre-heating of cells will be added to reduce thermal stress during soldering and to improve throughput. A process will be developed for soldering to both the front and back surfaces of thin cells simultaneously.

Components for two standard Spire subassemblies have been fabricated, the Two Lamp Solderhead Assembly, 412-0003, and the Actuator Assembly, 133-0018. The solder head assembly is shown in Figure 15. These subassemblies have been used successfully in Spire's commercial soldering equipment for processing standard thickness silicon cells in cycle times of three to five seconds per cell.

Special components have been designed for mounting the solderhead over the vacuum conveyor belt. The parts have been released to the Spire machine shop for fabrication in July.

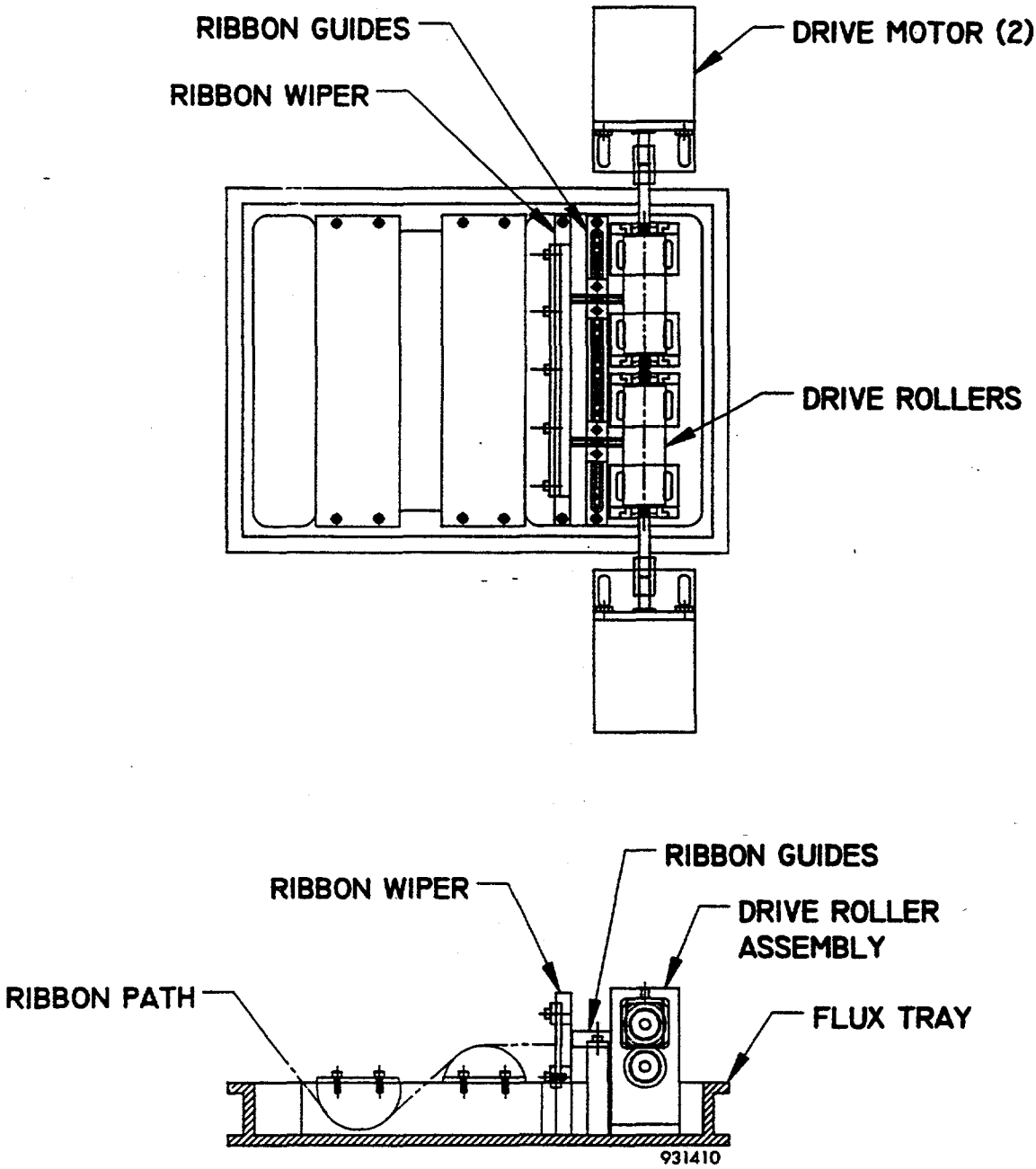

Figure 14 *Dual roller flux coating subassembly.*

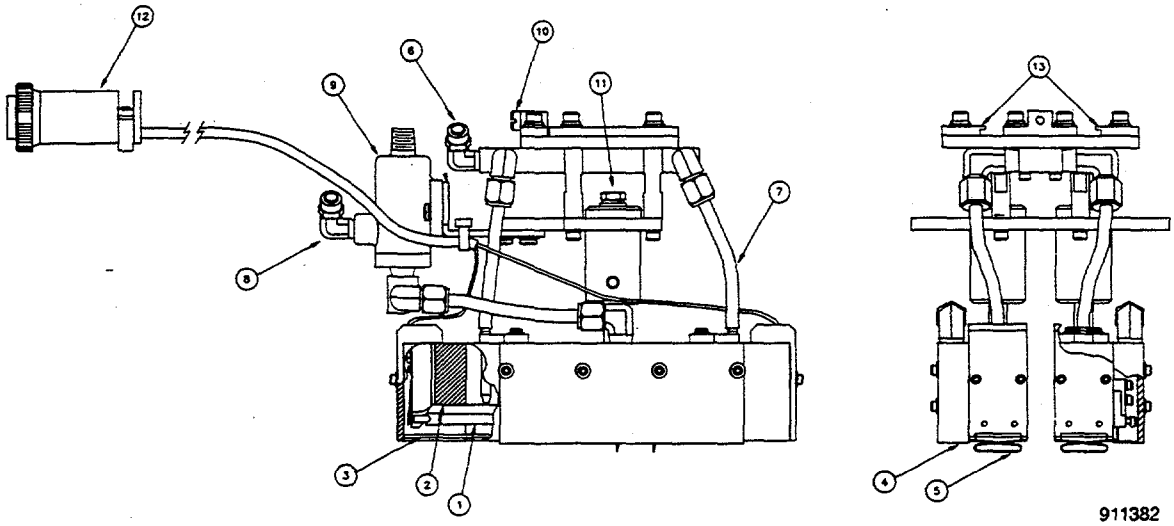

Figure 15 *Two lamp solder head assembly.*

2.3.7 *Task 7 - Cell String Handling Process Development*

The method for handling interconnect ribbons and cells as they are being assembled and soldered together is a critical part of the assembly process. A conveyor belt system has been conceived with vacuum capability for holding fragile components and heating capability for preheating cells prior to soldering. To explore the feasibility of this design approach, Spire engineers met with a vendor of stainless steel conveyor belts in March. The vendor has the capability of fabricating a continuous belt from stainless steel by making an electron beam butt weld with a very smooth surface profile. The vendor can also perforate the belt for vacuum holes and for a sprocketed pulley and fabricate the pulleys by a patented design which uses ball bearings as precise low-cost sprocket teeth. The sprockets ensure that the belt indexes with sufficient accuracy to control cell spacing and tab placement.

As a result of this meeting, the conveyor design appears to be entirely feasible and a detailed design has been completed. A sketch of the conveyor assembly is provided in Figure 16. A heated vacuum platen has been designed and fabricated to support the conveyor belt over its first 61 cm (24 inches). The platen is made of aluminum for low cost and high thermal conductance. Resistance strip heaters are mounted on the bottom surface of the platen, while a pattern of machined holes and slots in the platen provide paths for air to flow from the conveyor belt perforations to a vacuum plenum below the platen. The plenum is a bent and welded sheet metal box which supports the platen. The plenum has a welded tube to allow connection to a source of high flow vacuum.

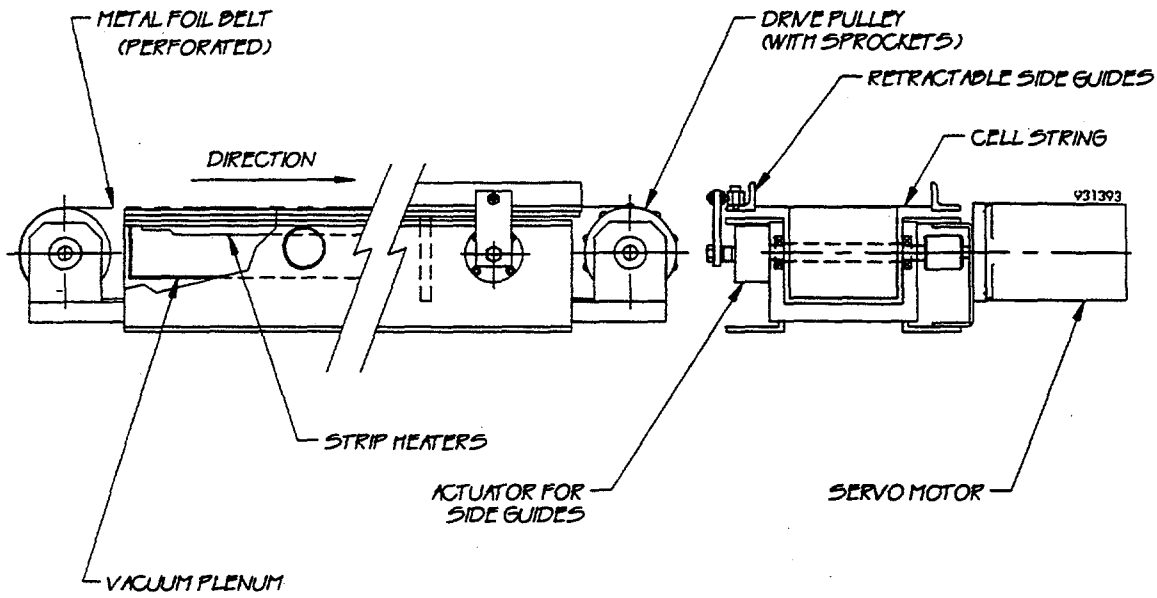

Figure 16 *Cell string conveyor assembly.*

Initial testing was done in May on the vacuum platen subassembly. Two 500 W resistance strip heaters were mounted to the bottom surface of the platen and the platen-heater assembly was mounted on the vacuum plenum. A thermocouple was installed in the platen and attached, along with the heaters, to a temperature controller. Initial testing showed that a simple on/off control results in too much temperature oscillation, so that PID control is required. Testing also showed that the heater power is inadequate, since the platen temperature is limited to approximately 80°C with air flowing through the vacuum holes. As a result, two 1000 W strip heaters have been ordered.

Once the cells are soldered to the interconnecting tabs, the conveyor belt carries them out of the heated and vacuum-ported zone defined by the platen. Since the belt is quite long (~3 m total) to allow the assembly of 2 m long strings, retractable side guides have been designed to keep the cells in a straight line. The guides are retracted away from the cells when the belt indexes to prevent contact with the cell edges. When the belt stops, the guides move slowly towards the cells to a preset limit, then quickly retract before the next belt motion.

Before a commitment was made to invest in the tooling and expense of a full length belt and pulleys, a 91 cm (3 ft) long prototype belt section was fabricated to test the effectiveness of the vacuum hole pattern in holding cells and ribbons. This belt section is made of the same materials and has the same vacuum hole and sprocket hole pattern as the full length belt. A shop vacuum was attached to the plenum and ribbons and cells were placed on the belt. The belt was found to hold one or more cells very securely. No motion of the cells with respect to the belt

was observed when the belt was moved over the platen surface. When only a pair of ribbons is held on the belt they are held weakly, but with a stronger source of vacuum they should be held more securely. We have begun contacting vendors of regenerative blowers which can generate lower pressures than a shop vacuum. One will be selected for testing in July.

Based on the positive results of the prototype belt test, a full length belt and pulleys have been ordered. Other details of the conveyor belt assembly have been designed and are being fabricated, including the pulley mounts and belt tracking mechanism, the retractable side guides, and the conveyor structural elements. The servo motor and controller for driving the belt has been selected and ordered.

2.3.8 *Task 9 - Process Subassembly Design*

The design of process subassemblies has been described in the above process development sections (Sections 2.3.2 through 2.3.7). Design work that was completed at the end of June includes the design of subassemblies for ribbon reels, flux application, ribbon drive, ribbon accumulators, ribbon clamp and form, ribbon cutting, string conveying and cell soldering.

The design of the cell loading and cell aligning subassemblies is in progress. The cell loading two axis pick-and-place unit and the cell aligner four axis motion system have been selected and ordered. The subsystems that remain to be designed are the cell stack elevators, stack carriers, and carrier shuttle for the loading system; the video imaging and processing system for the aligner; the string transfer assembly for transporting cell strings; the in-line string I-V tester; and the string array table for laying out multiple strings for modules.

A personal computer with an Intel 486-DX 66 MHz microprocessor was ordered and received for software development tasks. The computer will also provide overall system control and operator interface functions for the integrated system. An Allen Bradley programmable logic controller (PLC) was also received for control system development purposes. PLCs will be used where necessary for local process control.

2.3.9 *Task 12 - Information Dissemination*

A news release was prepared by Spire and approved by NREL to announce the start of this program. Spire mailed the news release in March to 137 publications, including trade magazines, journals, and photovoltaic industry newsletters. As a result of this news release, articles mentioning the program have appeared in several periodicals, including the March issue of Independent Energy, the April issue of Photovoltaic Insider's Report, the May issue of PV News, the May issue of Laser Focus World, and second quarter 1993 issue of the Solar Industry Journal.

Spire personnel (G. Darkazalli and R. Little) attended the Soltech 93 conference in Washington, D.C. On April 26, R. Little gave a five minute oral presentation on this program as part of the Industry Press Announcement session of the Solar Energy Forum.[4]

Spire engineers met with the engineers responsible for PV module manufacturing at Solec International, Siemens Solar Industries, Mobil Solar Energy Corporation, and Texas Instruments,

as described in Section 2.3.1, above. In addition to the design definition activities carried out under Task 1, the discussions served to inform these manufacturers about Spire's ongoing activities and plans under this program.

A preliminary specification sheet was also prepared to provide more detailed information to those manufacturers who are interested in automating their cell stringing processes. While the specifications are still preliminary, the general concepts and anticipated performance of the system are described. The system has been designated the SPI-ASSEMBLER™ 5000. The specification sheet has been distributed to a number of PV module manufacturers.

Spire personnel (R. Little, G. Darkazalli, M. Nowlan, and S. Hogan) attended the IEEE Photovoltaic Specialists Conference in Louisville, KY, from May 10 to 14. A news release regarding the PVMaT-3A program was available at the Spire booth in the exhibits area. The program was discussed with several PV manufacturers, including Siemens Solar (K. Mitchell), Solarex (J. Wohlgemuth), and Solec International (J. Shahryar).

A program review meeting was held for the PVMaT Technical Monitoring Team (TMT) at Spire on June 2. Attendees were the members of the TMT (D. Mooney and J. Burdick, NREL, and A. Maish, Sandia), Spire personnel involved in the program (G. Darkazalli, M. Nowlan, S. Hogan, S. Sutherland, J. Murach, W. Breen, S. Rechtoris, and D. VanAmburg), and U. Mass. Lowell personnel involved in the program (P. Krolak, J. Milstein, and C. Kosta). Program progress and system design concepts were reviewed in detail. A tour of Spire's facilities was conducted.

2.4 Thin Solar Cells

A supply of solar cells is needed to evaluate the ability of the subassemblies to process thin cells without significant cell breakage or other damage. As part of Solec's subcontract, they will deliver 1000 thin (200 μm) solar cells for this purpose during Phase 1. By the end of June, Solec had shipped 400 of these thin cells to Spire. The schedule calls for Solec to continue to ship at a rate of 200 cells per month. These cells will be used to evaluate the cell loading process, the cell alignment process, the ribbon to cell solder process, the cell string handling process, and the in-line I-V string testing process.

SECTION 3
CONCLUSIONS

As part of the PVMaT Phase 3A project, Spire and its team members have begun working on a program titled "Automated Solar Cell Assembly Teamed Process Research." The team members include lower-tier subcontractors Solec International, a PV module manufacturer, and the University of Massachusetts Lowell's Center for Productivity Enhancement, automation experts.

The program objective is to develop high yield, high throughput, fully automated processes for tabbing and interconnecting thin silicon solar cells. Highlights of the first six months of the program are as follows:

Task 1 - Design Definition - Spire engineers met with Solec to determine their specific needs for cell interconnection, and with other PV manufacturers (Siemens Solar, Mobil Solar, and Texas Instruments) to determine the generic needs of the PV industry. Out of these discussions came the recommendation for an in-line string I-V test, which has been added to the program as Tasks 8 and 13. This test will provide improved process control for higher quality modules. This task is now completed.

Task 2 - Cell Loading Process Development - An extensive survey of commercial wafer handling equipment was conducted. R-θ-z wafer robots, common in the semiconductor industry, were found to be too slow to meet our 4 s/cell requirement. Carriers for cell stacks have been selected over slotted cassettes because of the greatly reduced volume. A two stack system has been selected to allow continuous cell feeding (no interruptions for the operator to load a stack) for higher throughput. Commercial stack unloaders could not satisfy all of the requirements for speed, cell size capacity, and dual stack capability, so a custom system is being designed. A special vacuum pick-up end effector with a floating mount has been designed for handling thin cells.

Task 3 - Cell Alignment Process Development - A preliminary alignment process algorithm has been formulated (Table III). A four axis (x-y-z-θ) motion system for aligning and transporting cells has been selected. Stepper motors will provide the required alignment accuracy in x, y, and θ, while z will be air actuated for reduced cost. A floating mount vacuum end effector, similar to the one designed for cell loading, will be used.

Task 4 - Interconnect Ribbon Handling Process Development - The mechanical design of processing subassemblies for ribbon handling, bending, and cutting has been completed. These components are the ribbon reel assembly, the flux station (including the ribbon drive assembly), the ribbon accumulators, the ribbon clamp and form assembly, the ribbon cutter, and the ribbon shuttle assembly. The ribbon accumulators, the ribbon clamp and form assembly, the ribbon cutter, and the ribbon shuttle assembly have been fabricated.

Task 5 - Solder Flux Application Process Development - A prototype interconnect ribbon fluxing subassembly was designed and fabricated. Preliminary trials done with a no-clean flux showed a tendency for the flux to stick the ribbon to the urethane drive rollers. New Teflon

drive rollers have been designed and ordered. More extensive testing will be done when the ribbon handling subassemblies are integrated and the testing can be automated.

Task 6 - Ribbon to Cell Solder Process Development - Spire's light soldering process will be combined with conductive preheating of the cells to reduce thermal stress and increase throughput. Components for the solder head and the actuator assemblies have been fabricated. Special components have been designed for mounting the solder head over the vacuum conveyor.

Task 7 - Cell String Handling Process Development - A vacuum plenum, heated vacuum platen, and prototype conveyor belt section have been designed and fabricated. A test of the two 500 W strip heaters showed that they have insufficient power, given the cooling effect of the air flow generated by the vacuum. 1000 W heaters have been ordered. A temperature controller with PID capability has been purchased. Testing with the prototype perforated belt indicates that the vacuum clamping capability will work well. The full length (3.05 m) conveyor belt assembly has been designed and components have been ordered.

Task 9 - Process Subassembly Design - Process subassemblies have been designed for ribbon reels, flux application, ribbon drives, ribbon accumulators, ribbon clamp and form, ribbon cutting, string conveying and cell soldering. The design of the cell loading and cell aligning subassemblies is in progress. The cell loading two axis pick-and-place unit and the cell aligner four axis motion system have been selected and ordered. The subsystems that remain to be designed are the cell stack elevators, stack carriers, and carrier shuttle for the loading system; the video imaging and processing system for the aligner; the string transfer assembly for transporting cell strings; the in-line string I-V tester; and the string array table for laying out multiple strings for modules.

Task 12 - Information Dissemination - Spire mailed a news release to 137 publications to announce the start of this program to the PV industry. As a result, articles have appeared in at least five industry news letters and magazines. A preliminary specification sheet was prepared which describes the processing system, which has been named the SPI-ASSEMBLER™ 5000. Copies of the specification sheet are being distributed to interested manufacturers. In April, Spire gave an oral presentation describing this program at Soltech 93 in Washington, DC. In May, Spire personnel met with a large number of PV manufacturers attending the IEEE Photovoltaic Specialists Conference in Louisville, KY. Spire engineers have visited Solec and Siemens Solar, and engineers from Mobil Solar and Texas Instruments have visited Spire to discuss the processes and systems being developed in this program. A design review was held for the PVMaT Technical Monitoring Team at Spire on June 2.

SECTION 4
REFERENCES

1. P.D. Maycock, "World Module Shipments by Cell Technology," *PV News* Vol. 12 No. 2, 3 (1993).

2. Spire Corporation, "Photovoltaic Manufacturing Technology Program," Phase I Final Report, SERI Contract XC-1-10057-1 (1991).

3. Fluoroware Wafer Carrier No. PA92-39M-0603 for 100 mm square solar cells.

4. R. Little, "Automated Solar Cell Assembly Teamed Process Research," oral presentation at Soltech 93, Solar Energy Forum, Washington DC, April 1993.

APPENDIX A

ASSEMBLY PROCESS TIME BUDGET

TIME BUDGET FOR SPI-ASSEMBLER 5000

NREL PVMaT-3A Program
Spire Corporation

M. Nowlan
August 6, 1993

Task No.	Task Description	Time (s)	Comments
1.0	Position cell stack for loading		
1.1	Index elevators when stack empties	(4.0)	This task done only once per stack
1.2	Raise cells to top position	0.2	Optically align top of stack
	Total:	0.2	
2.0	Move cell to aligner		
2.1	Pick up cell, z motion	1.5	Slow up motion to separate cells
2.2	Translate cell, x motion	0.5	
2.3	Place cell at aligner, z	0.8	
2.4	Return pick-up tool to elevator, x	0.5	
	Total:	3.3	
3.0	Align, inspect & place cell		
3.1	Acquire cell image	(0.1)	This task can be done during task 3.6
3.2	Process image to locate & inspect cell	(1.0)	This task can be done during task 3.7
3.3	Move end effector to cell center; x, y	(0.2)	This time used for 1st cell only
3.4	Pick up cell; z	0.8	
3.5	Align cell in x, y, theta and transport to conveyor belt or reject elevator	1.2	18" travel @ 15"/sec
3.6	Place cell on conveyor or elevator; z	0.8	
3.7	Move end effector to next cell center; x	1.2	18" travel @ 15"/sec
	Total:	4.0	
4.0	Position reject cell stack for unloading		
4.1	Lower cells to proper position	0.2	Optically align top of stack
4.2	Unload stack when full	(10.0)	Manual operation, only when carrier is full
	Total:	0.2	
5.0	Make tabs, place cell & index		
5.1	Grip & move ribbons to bend position	0.5	Programmed motion
5.2	Bend ribbons	0.3	Ribbon clamp & form assembly
5.3	Move ribbons to cut position	0.3	Programmed motion
5.4	Cut ribbons (to make tabs)	0.5	Ribbon cutter
5.5	Move & place tabs on belt	0.3	Programmed motion
5.6	Dispense paste or flux on tabs		*Optional*
5.7	Retract & return grippers	0.5	
5.8	Place cell on tabs	0.8	Same as step 3.6
5.9	Dispense paste or flux on cell		*Optional*
5.10	Index conveyor belt	(0.5)	Can do during steps 5.1 through 5.4
	Total:	3.2	

TIME BUDGET FOR SPI-ASSEMBLER 5000

NREL PVMaT-3A Program
Spire Corporation

M. Nowlan
August 6, 1993

Task No.	Task Description	Time (s)	Comments
6.0	Solder tabs to cell & index		
6.1	Move head down & melt solder	1.0	Cell is preheated to minimize time
6.2	Hold tabs and freeze solder	2.0	Cooling air used to minimize time
6.3	Move solder head up	0.3	
6.4	Index conveyor belt	0.5	Same step as step 5.10
	Total:	3.8	
7.0	Transport & inspect string		
7.1	Index conveyor belt		Position cells under pick-up arm
7.2	Pick up string		
7.3	Position over light		
7.4	Make electrical contact		Probe tabs at string ends
7.5	Test string		Measure string I-V
7.6	Break electrical contact		Remove probes
7.7	Place good string on module carrier or place reject string on reject carrier		X, y, theta string movement
7.8	Return pick-up arm to belt		
	Total:		The time budget for Task 7 is 4 s/cell x the number of cells per string

APPENDIX B
WAFER HANDLING EQUIPMENT
VENDOR SURVEY

WAFER-HANDLING EQUIPMENT SUPPLIERS

Primary Sources

COMPANY	PRODUCTS	LAST CONTACT	STATUS
ADE Corporation	r-θ-z robotics; cassette elevators	2/93 Telephone	Not selected; too slow
AMI	coinstack unloaders; air pad pick-ups	5/19/93 Visited Spire	Quotation, 5/93
Brooks Automation	r-θ-z robotics; cassette elevators	4/8/93 Visited Spire	Not selected; too slow
Cybeq Systems	r-θ-z robotics; cassette elevators; end effectors	5/93 Telephone	Not selected; too slow
Genmark Automation	r-θ-z robotics; cassette elevators; end effectors	2/93 Telephone	Not selected; too slow
Monadnock Automated Design	r-θ-z robotics; contract designer	3/31/93 Visited Spire	Available for consultation
Precision Robots, Inc.	cassette to cassette wafer transfer	4/1/93 Visit @ PRI	Not selected; too slow
Proconics International	custom system design, "Type A"	4/16/93 Visited Spire	No quotation; NRE price too high
Seiko Instruments USA	r-θ-z; x-y-z robotics	2/93 Telephone	Not selected; too slow

spire

V-93-91

WAFER-HANDLING EQUIPMENT SUPPLIERS

Secondary Sources

COMPANY	PRODUCTS	LAST CONTACT
Advanced Control Group	r-θ-z robotics	2/93
Air Control, Inc.	special wafer-handling system	4/93
Design Technology	industrial automation	3/19/93, Visited Spire
Fanuc Robotics	industrial robots, 4 & 6 axes	3/93
Hine Design	wafer transfer systems	2/93
MGI Electronics	wafer transfer systems	2/93
Tencor Instruments	cassette-cassette robotics	2/93
Ultracision, Inc.	cassette unload system; robotics	4/23/93, Visited Spire

spire

Document Control Page	1. NREL Report No. NREL/TP-411-6264	2. NTIS Accession No. DE94000295	3. Recipient's Accession No.

4. Title and Subtitle Automated Solar Cell Assembly Teamed Process Research	5. Publication Date February 1994 6.
7. Author(s)	8. Performing Organization Rept. No.
9. Performing Organization Name and Address Spire Corporation One Patriots Park Bedford, MA 01730-2396	10. Project/Task/Work Unit No. PV450101 11. Contract (C) or Grant (G) No. (C) ZAG-3-11219-01-105658 (G)
12. Sponsoring Organization Name and Address National Renewable Energy Laboratory 1617 Cole Blvd. Golden, CO 80401-3393	13. Type of Report & Period Covered Technical Report 7 January 1993 - 30 June 1993 14.

15. Supplementary Notes
NREL technical monitor: H. Thomas

16. Abstract (Limit: 200 words)

This report describes work done under Phase 3A of the PVMaT project to address problems that are generic to the photovoltaics (PV) industry. Crystalline silicon solar cells were used in the majority of all terrestrial power modules shipped in 1992. Spire's analysis in Phase 1 of the PVMaT project indicated that the use of thin ($\leq$ 200-μm) silicon cells can substantially reduce module manufacturing costs, provided that processing yields remain as high as they are now for processing standard thickness cells. Because present solar cell tabbing and interconnecting processes have unacceptably high yield losses with such thin cells, the objective of this Phase 3A subcontract is to use Spire's light soldering technology and experience in designing and fabricating solar cell tabbing and interconnecting equipment to develop high yield throughput, fully automated processes for tabbing and interconnecting thin cells.

17. Document Analysis
a. Descriptors
manufacturing ; crystalline silicon ; modules ; photovoltaics ; solar cells

b. Identifiers/Open-Ended Terms

c. UC Categories
270

18. Availability Statement National Technical Information Service U.S. Department of Commerce 5285 Port Royal Road Springfield, VA 22161	19. No. of Pages 40 20. Price A03

Form No. 0069E (6-30-87)