161
10-11-81

No Stock

SERI/TP-333-605

June 1980

MASTER

Second Thermal Storage Applications Workshop

Charles E. Wyman
Ronal W. Larson

Solar Energy Research Institute
A Division of Midwest Research Institute

1617 Cole Boulevard
Golden, Colorado 80401

Operated for the
U.S. Department of Energy
under Contract No. EG-77-C-01-4042

DISCLAIMER

This report was prepared as an account of work sponsored by an agency of the United States Government. Neither the United States Government nor any agency Thereof, nor any of their employees, makes any warranty, express or implied, or assumes any legal liability or responsibility for the accuracy, completeness, or usefulness of any information, apparatus, product, or process disclosed, or represents that its use would not infringe privately owned rights. Reference herein to any specific commercial product, process, or service by trade name, trademark, manufacturer, or otherwise does not necessarily constitute or imply its endorsement, recommendation, or favoring by the United States Government or any agency thereof. The views and opinions of authors expressed herein do not necessarily state or reflect those of the United States Government or any agency thereof.

DISCLAIMER

Portions of this document may be illegible in electronic image products. Images are produced from the best available original document.

Printed in the United States of America
Available from:
National Technical Information Service
U.S. Department of Commerce
5285 Port Royal Road
Springfield, VA 22161
Price:
Microfiche $3.00
Printed Copy $6.00

NOTICE

This report was prepared as an account of work sponsored by the United States Government. Neither the United States nor the United States Department of Energy, nor any of their employees, nor any of their contractors, subcontractors, or their employees, makes any warranty, express or implied, or assumes any legal liability or responsibility for the accuracy, completeness or usefulness of any information, apparatus, product or process disclosed, or represents that its use would not infringe privately owned rights.

SERI/TP-333-605
UC CATEGORY: UC-62

MASTER

SECOND THERMAL STORAGE APPLICATIONS WORKSHOP

CHARLES E. WYMAN
RONAL W. LARSON

JUNE 1980

SECOND THERMAL STORAGE APPLICATIONS WORKSHOP, AIRPORT RAMADA INN
SAN ANTONIO, TEXAS
FEBRUARY 7-8, 1980

PREPARED UNDER TASK NO. 3441

Solar Energy Research Institute
A Division of Midwest Research Institute

1617 Cole Boulevard
Golden, Colorado 80401

Prepared for the
U.S. Department of Energy
Contract No. EG-77-C-01-4042

DISCLAIMER

This book was prepared as an account of work sponsored by an agency of the United States Government. Neither the United States Government nor any agency thereof, nor any of their employees, makes any warranty, express or implied, or assumes any legal liability or responsibility for the accuracy, completeness, or usefulness of any information, apparatus, product, or process disclosed, or represents that its use would not infringe privately owned rights. Reference herein to any specific commercial product, process, or service by trade name, trademark, manufacturer, or otherwise, does not necessarily constitute or imply its endorsement, recommendation, or favoring by the United States Government or any agency thereof. The views and opinions of authors expressed herein do not necessarily state or reflect those of the United States Government or any agency thereof.

DISTRIBUTION OF THIS DOCUMENT IS UNLIMITED

THIS PAGE

WAS INTENTIONALLY

LEFT BLANK

PREFACE

On February 7 and 8, 1980, the Second Thermal Storage Applications Workshop was held in San Antonio, Texas, between managers and representatives of the Solar Thermal Power Systems Program (TPS) of the DOE Division of Central Solar Technology (CST) and the Thermal Energy Storage Program (TES) of the DOE Division of Energy Storage Systems (STOR). The workshop was sponsored by the U.S. Department of Energy and organized by the Solar Energy Research Institute. The primary purpose of the workshop was to review the joint Thermal Energy Storage for Solar Thermal Applications Program between the two DOE divisions and discuss important issues. This report summarizes the presentations, discussions, and results of the workshop. All of the information presented in this report is for planning purposes only, and the Department of Energy and its support laboratories are not obligated in any way to follow these recommendations.

Charles E. Wyman

Charles E. Wyman

Approved for:

SOLAR ENERGY RESEARCH INSTITUTE

Frank Kreith

Frank Kreith, Chief
Solar Thermal Research Branch

D.W. Kearney

D. W. Kearney, Acting Division Manager
Solar Thermal, Ocean, and Wind Division

THIS PAGE

WAS INTENTIONALLY

LEFT BLANK

SUMMARY

On February 7 and 8, 1980, approximately 20 persons representing the management of both the Solar Thermal Power Systems Program (TPS) of the U.S. Department of Energy (DOE) Division of Central Solar Technology (CST) and the Thermal Energy Storage Program (TES) of the DOE Division of Energy Storage Systems (STOR) met in San Antonio, Texas, for the Second Thermal Storage Applications Workshop. The purpose of the workshop was to review the joint Thermal Energy Storage for Solar Thermal Applications (TESSTA) Program between CST and STOR and to discuss important issues in implementing it. The meeting began with summaries of the seven major elements of the joint program (six receiver-related, storage development elements, and one advanced technology element). Then, a brief description along with supporting data was given of several issues related to the recent joint multiyear program plan (MYPP). Following this session, the participants were divided into three smaller groups representing the program elements that mainly supported large power, small power, and advanced technology activities. During the afternoon of the first day, each group prioritized the program elements through program budgets and discussed the issues defined as well as others of concern. On the morning of the second day, representatives of each group presented the group's results to the other participants.

Major conclusions arising from the workshop were:

- The present MYPP was generally endorsed in all major aspects.
- A slight shift in budget (a change of $300K to $500K) from large to small systems was endorsed. The relative change would be more pronounced for large increases in the budget than for large decreases.
- The four program elements constituting the large power area were endorsed. Highest priority was given to work on salt storage, and lowest priority was assigned to the liquid metals and air systems.
- The funding distribution for the small power elements was somewhat modified, with greater emphasis on dish-related technologies than on troughs. No new program elements were identified. It was noted that storage development costs are likely to be lower for small power systems, and parity in funding with large power storage would be inappropriate.
- The advanced technology program group recommended that increased emphasis be placed in the near term on thermal transport in the advanced technology element. Furthermore, this group advocated that the advanced storage technology element be based on low-, medium-, and high-temperature regimes, with increasing emphasis on high-temperature storage technology research over the time span of the program.
- The advanced technology group felt that creating new program elements for the systems/markets analysis and the planning wedge for new systems would more accurately describe the present program structure than including them in the advanced technology element.
- Increased activity is required in systems analysis to optimize the solar thermal/storage system. This systems work should be primarily the responsibility of CST, but funding of expanded storage-oriented systems analysis under the joint Thermal Energy Storage for Solar Thermal Applications Program was endorsed if CST funds are not forthcoming.

- The mission of the joint Thermal Energy Storage for Solar Thermal Applications Program was endorsed to develop second-generation technology for low-risk, full-scale engineering tests. Approximately two-thirds of the program funds in the long term should be devoted to this mission. The largest portion of the remaining funds should be used for research on less developed technologies (third generation), while the rest should support more developed storage systems (first generation).
- Concern was expressed over the present situation of separate budget (CST) and management (STOR) control. Participants preferred to switch the appropriate budget item to STOR to coincide with the existing management responsibility. The existing system with split responsibility was slightly favored over the alternative of returning management control to CST. Reasons for not favoring control by CST were enthusiasm for the present rate of progress and fear that the storage program would not receive appropriate attention within the solar thermal area.
- A need for better communication between the TES and TPS solar thermal programs as well as within the joint TESSTA program was identified.
- It was clear at this meeting that the TPS program does not show a sense of national urgency concerning the early need for storage. Therefore, greater evidence of the value of storage to the TPS program must be shown. In part, this requires further systems study, but improved communication is also necessary. A revised budget/management structure might also help to alleviate this problem.
- The assembled group concurred on the need for additional workshops. The optimum time appears to be January to enable discussion of several budgets at one time and impact the budget process. Distribution of the multiyear program plans for both the TPS and TES programs prior to the meeting was urged to expedite the discussion.

This report expands on these issues, specifically comparing the outputs of the three discussion groups and discussing several other issues for which a consensus was not reached. All of the reported information is for planning purposes only, and the Department of Energy and its support laboratories are not obligated in any way to follow recommendations presented herein.

TABLE OF CONTENTS

	Page
1.0 Introduction	1
2.0 Workshop Objectives	2
3.0 Presentations, Issues, and Group Formation	3
4.0 Budget Planning	7
5.0 Issues	11
6.0 Other Issues	15
7.0 Future Workshop Plans	16
Appendix A: Workshop Attendees	17
Appendix B: Workshop Agenda	19
Appendix C: Group Participants	21
Appendix D: Workshop Presentations	23

THIS PAGE

WAS INTENTIONALLY

LEFT BLANK

LIST OF FIGURES AND TABLES

Figure		Page
4-1	Funds Assigned to Element Areas by Three Workshop Groups As Funding Multiple Changes	10

Table		Page
3-1	Joint Thermal Energy Storage Technology Development Plan: STOR Base Program Resource Distribution in FY79 Dollars	4
3-2	Joint Thermal Energy Storage Technology Development Plan: STOR Base Program Plus Planning Wedge Resource Distribution in FY79 Dollars	5
3-3	TPS Program Resource Distribution in FY79 Dollars for Thermal Energy Storage	6
4-1	Joint Thermal Energy Storage Technology Development Plan: FY81 Funds Assigned to Seven Program Elements by Three Workshop Groups	8
4-2	Joint Thermal Energy Storage Technology Development Plan: Summary of FY81 Funds Assigned to Three Element Areas by Workshop Groups	9

1.0 INTRODUCTION

On February 14 and 15, 1978, the First Thermal Storage Applications Workshop* was held in Golden, Colorado, between managers and representatives of the Solar Thermal Power Systems Program (TPS) of the DOE Division of Central Solar Technology (CST) and the Thermal Energy Storage Program (TES) of the DOE Division of Energy Storage Systems (STOR).** At that time, a communications problem was identified between the TES and TPS programs in developing thermal energy storage systems for incorporation into solar thermal facilities. The solar applications developers need support from the storage laboratories but have trouble identifying storage specifications or requirements because both continually change. The solar laboratories also do not know what is available or realistically achievable in the storage area. On the other hand, STOR needs storage priorities and requirements to develop thermal storage technologies appropriate for solar thermal use. Without this information, generic thermal energy storage systems are developed that may not fit the solar thermal applications.

Near the end of the first workshop, a committee was formed to coordinate thermal energy storage development for solar thermal power applications, and J. Calogeras of NASA/Lewis Research Center was designated to lead the effort. Following the workshop, visits were made to each solar thermal laboratory to determine the thermal storage needs for each application area and to provide information on available storage systems. As a result of these visits, a joint Thermal Energy Storage for Solar Thermal Applications (TESSTA) plan was drafted between CST and STOR to ensure development of appropriate thermal energy storage technologies for solar thermal applications. The plan was implemented in FY80 with Sandia Laboratory/Livermore responsible for focused thermal energy storage development, the Solar Energy Research Institute (SERI) responsible for systems analyses and advanced thermal energy storage research, and NASA/Lewis Research Center responsible for overall program coordination. However, in FY80, NASA/Lewis decided to phase out of the TES and TESSTA programs.

---

*An analysis of the workshop was published by Jet Propulsion Laboratory: Thermal Storage Applications Workshop. Vol. I: Plenary Session Analysis. Golden, CO; 14-15 Feb. 1978. Pasadena, CA: JPL.

**The DOE organization referred to in this document is that in effect at the time of the coordination activities.

2.0 WORKSHOP OBJECTIVES

The primary objective of the Second Thermal Storage Applications Workshop was to provide a forum for interaction and information exchange about the joint Thermal Energy Storage for Solar Thermal Applications (TESSTA) Plan between the Solar Thermal Power Systems Program (TPS) of the DOE Division of Central Solar Technology (CST) and the Thermal Energy Storage Program (TES) of the DOE Division of Energy Storage Systems (STOR). Management and representatives of both TPS and TES were invited to attend the workshop; attendees and their addresses are listed in Appendix A. The existing program plan was to be reviewed and important issues raised. The participants were then to identify their funding priorities within the program and to discuss issues that need resolution. This report summarizes the workshop. All of the reported information is for planning purposes only, and the Department of Energy and its support laboratories are not obligated in any way to follow the recommendations presented herein.

3.0 PRESENTATIONS, ISSUES, AND GROUP FORMATION

J. Gahimer from STOR began the first day's workshop session, as indicated on the agenda (Appendix B). He wanted the meeting to provide a forum for information exchange on the joint Thermal Energy Storage for Solar Thermal Applications (TESSTA) Program and to obtain feedback on the multiyear program plan (MYPP). J. Calogeras of the NASA/Lewis Research Center followed with a short review of the evolution of the MYPP. He also presented the budgets. W. Wilson from Sandia Laboratory/Livermore gave an overview of the six thermal energy storage development elements listed in Table 3-1, which are categorized according to the types of solar thermal receiver development each supports. The status and future plans for each of the storage elements were summarized. C. Wyman of SERI then described the technology base activities being conducted in Element 7 of the joint plan. He summarized the objectives and accomplishments for the FY80 program, and new subelements to be added in FY81 were identified. R. Copeland of SERI followed with a review of the systems analysis effort being conducted as part of Element 7 to identify cost goals for thermal storage and to select thermal storage systems for development. Copies of the viewgraphs used for these presentations are attached as Appendix D.

A number of important questions were posed during the morning, and since extra time was spent to ensure that they were answered satisfactorily, the presentations ran until noon. Following lunch, the full session reconvened to review the list of issues distributed to the workshop participants. To aid in discussion of these issues, a more detailed document including supporting data was provided. Each of the issues along with the supporting budget information was covered.

The attendees were divided into three groups to represent large power systems, small power systems, and advanced technology R&D. The participants in each group are listed in Appendix C; the group leader is indicated by an asterisk. Program elements 1 through 4 of Table 3-1 were assigned to the large power Group A, elements 5 and 6 to the small power Group B, and element 7 to the advanced technology Group C. Each group was asked to distribute $7.0M for FY81 and $70M for the total program among the seven elements. In addition, each group was asked to fund the total program with one-half and twice these budgets. The STOR baseline program budget, STOR base budget plus planning wedge, and CST budget were given as presented in Tables 3-1, 3-2, and 3-3, respectively, based on the latest TESSTA Program Plan. Then, the groups were asked to discuss further any of the listed issues identified as important, as well as any other issues felt to be worthwhile.

On the morning of the second day, each group leader presented the results of his group's discussion. Time was allowed at the end of the presentations for general discussion. In the following narrative, the results of this morning session are summarized, starting with the budget breakdowns in Section 4.0. Section 5.0 presents the issues discussed in the order given in the handout. For the latter, the questions are restated and some of the background information distributed to the group is included. Section 6.0 deals with the issues not identified in advance. Finally, Section 7.0 identifies the need for future workshops.

Table 3-1. **JOINT THERMAL ENERGY STORAGE TECHNOLOGY DEVELOPMENT PLAN: STOR BASE PROGRAM RESOURCE DISTRIBUTION IN FY79 DOLLARS**

Element	$ Million						
Fiscal Year	80	81	82	83	84	85	Total
1. Storage for Water/Steam Cooled Collector/Receiver	0.3	0.5	1.5	1.0	0.5	—	3.8
2. Storage for Molten Salt Cooled Sensible Heat Collector/Receiver	2.1	2.5	0.5	—	—	—	5.1
3. Storage for Liquid Metal Cooled Sensible Heat Collector/Receiver	—	0.5	1.0	3.0	3.0	0.5	8.0
4. Storage for Gas Cooled Sensible Heat Collector/Receiver	0.3	0.7	1.5	1.5	0.5	—	4.5
5. Storage for Organic Cooled Sensible Heat Collector/Receiver	0.5	0.5	0.5	0.5	0.2	—	2.2
6. Storage for Liquid Metal/Salt Cooled Latent Heat Collector/Receiver	0.7	0.7	0.5	—	—	—	1.9
7. Advanced Storage Technologies A. Systems Analysis and Assessment B. Advanced Technology Development C. New Concept Definition D. Focused Development of Advanced Storage Technologies	1.3	1.6	1.6	1.6	1.6	1.6	9.3
TOTAL	5.2	7.0	7.1	7.6	5.8	2.1	34.8

Table 3-2. **JOINT THERMAL ENERGY STORAGE TECHNOLOGY DEVELOPMENT PLAN: STOR BASE PROGRAM PLUS PLANNING WEDGE RESOURCE DISTRIBUTION IN FY79 DOLLARS**

Element	$ Million						
Fiscal Year	80	81	82	83	84	85	Total
1. Storage for Water/Steam Cooled Collector/Receiver	0.3	0.5	1.5	1.0	0.5	—	3.8
2. Storage for Molten Salt Cooled Sensible Heat Collector/Receiver	2.1	2.5	0.5	—	—	—	5.1
3. Storage for Liquid Metal Cooled Sensible Heat Collector/Receiver	—	0.5	1.0	3.0	3.0	0.5	8.0
4. Storage for Gas Cooled Sensible Heat Collector/Receiver	0.3	0.7	1.5	1.5	0.5	—	4.5
5. Storage for Organic Fluid Cooled Sensible Heat Collector/Receiver	0.5	0.5	0.5	0.5	0.2	—	2.2
6. Storage for Liquid Metal/Salt Cooled Latent Heat Collector/Receiver	0.7	0.7	0.5	—	—	—	1.9
7. Advanced Storage Technologies							
A. Systems Analysis and Assessment	1.3	1.6	1.6	5.5	5.5	5.5	21.0
B. Advanced Technology Development							
C. New Concept Definition							
D. Focused Development of Advanced Storage Technologies							
TOTAL	5.2	7.0	7.1	11.5	9.7	6.0	46.5

Table 3-3. TPS PROGRAM RESOURCE DISTRIBUTION IN FY79 DOLLARS FOR THERMAL ENERGY STORAGE

Element	Fiscal Year	80	81	82	83	84	85	Total
		$ Million						
1. Storage for Water/Steam Cooled Collector/Receiver		—	—	—	—	0.1	5.0	5.1
2. Storage for Molten Salt Cooled Sensible Heat Collector/Receiver		—	0.5	2.0	3.0	3.0	2.0	10.5
3. Storage for Liquid Metal Cooled Sensible Heat Collector/Receiver		—	—	—	—	—	TBD	TBD
4. Storage for Gas Cooled Sensible Heat Collector/Receiver		—	—	—	—	0.2	1.0	1.2
5. Storage for Organic Fluid Cooled Sensible Heat Collector/Receiver		—	—	—	—	0.2	0.4	0.6
6. Storage for Liquid Metal/Salt Cooled Latent Heat Collector/Receiver		—	0.1	0.2	0.2	0.1	—	0.6
TOTAL		—	0.6	2.2	3.2	3.6	8.4	18.0

4.0 BUDGET PLANNING

The funding breakdowns assigned by each group for the seven program elements are summarized in Table 4-1. Only the FY81 budget is shown because just one of the groups addressed assignment of the total budget. Group C, the advanced technology group, spent a good deal of time identifying what the advanced technology subelements should be before they assigned funds, and as a result, this group did not have sufficient time to decide the funding breakdown for the first six elements. Therefore, the table shows only funding by the large power, small power, and advanced technology element groupings for Group C.

All groups felt the double funding level ($14.0M for FY81 and $140M for the entire program period) was too high. Group A appeared to give extra funds to advanced technology, Group B refused to spend $14.0M in FY81, and Group C seemed to give their extra money to small power. Group B did not designate their funding priorities for the overall program period but gave an FY82 breakdown instead. All the FY81 results are summarized in Table 4-2 according to the three element groupings.

In Fig. 4-1, FY81 funding assigned by each group to large power storage, small power storage, and advanced technology is plotted against the funding multiplier used for the total program budget. A multiplier of one refers to the current total program funding level. Some trends may be inferred from this plot. Group A protected the funding of the large power storage development but aggressively assigned funds to the small power storage development and advanced technology areas as program funding increased. Group B increased the funds assigned to large power and advanced technology more slowly than funds for the small power elements. This group apparently could not justify continually assigning funds to the other areas, although they could find ways to use the resources for small power storage development. Group C assigned less funds to large power systems than provided in the MYPP, although they did linearly increase the large power resources. On the other hand, Group C was quite aggressive in assigning funds to small power systems while still ensuring that advanced technology had sufficient funds to be effective.

Overall, Group A followed the MYPP to the letter for the FY81 base level funding. Group B decreased the resources for large power to increase the funding for small power by 50%. Group C decreased the resources for large power even further to provide a greater than 50% increase for small power while increasing advanced technology by about 30%.

In the open discussion that followed the group leader summaries, the current program funding was generally endorsed. A slight shift in budget was advocated of $300K to $500K from large power system storage to small power system storage. This increase would be more pronounced for large budget increases than large decreases. Storage development costs were indicated to be inherently lower for small power systems; thus, equal funding with the large power area would not be appropriate. Within the large power area, the higher priority for molten-salt receiver storage was endorsed and a low priority was given to storage for liquid-metal receivers. The small power funding distribution was somewhat modified with a slight shift in emphasis from organic fluid receivers to the latent heat receivers. A more level funding pattern was requested for the organic fluid receiver area instead of the planned heavier, limited-duration funding, although the latter was acceptable. The more level funding would ensure that the effort in thermocline storage would not be phased out, only to be reinitiated later. Phasing out the Rocketdyne work on thermocline storage was identified as a mistake.

Table 4-1. JOINT THERMAL ENERGY STORAGE TECHNOLOGY DEVELOPMENT PLAN: FY81 FUNDS ASSIGNED TO SEVEN PROGRAM ELEMENTS BY THREE WORKSHOP GROUPS

	$ Million								
	Half Base Funding			Base Funding			Double Base Funding		
	Group			Group			Group		
Element	A	B	C[a]	A	B	C[a]	A	B	C[a]
1. Storage for Water/Steam Cooled Collector/Receiver	0.5	—		0.5	1.0		1.5	1.0	
2. Storage for Molten Salt Cooled Sensible Heat Collector/Receiver	1.7	2.0	1.5	2.5	2.0	3.0	3.0	2.2	6.0
3. Storage for Liquid Metal Cooled Sensible Heat Collector/Receiver	—	—		0.5	—		0.5	0.5	
4. Storage for Gas Cooled Sensible Heat Collector/Receiver	0.2	—		0.7	0.7		1.5	0.7	
5. Storage for Organic Cooled Sensible Heat Collector/Receiver	0.5	0.3	1.0	0.5	0.7	1.9	2.0	1.0	5.0
6. Storage for Liquid Metal/Salt Cooled Latent Heat Collector/Receiver	—	0.7		0.7	1.1		1.0	1.9	
7. Advanced Storage Technologies	0.6	0.5	1.0	1.6	1.5	2.1	4.5	2.0	3.0
TOTAL	3.5	3.5	3.5	7.0	7.0	7.0	14.0	9.3	14.0

[a]Group C only identified funding for the groups of elements 1-4, 5-6, and 7 and did not distribute funds to individual elements.

Table 4-2. JOINT THERMAL ENERGY STORAGE TECHNOLOGY DEVELOPMENT PLAN: SUMMARY OF FY81 FUNDS ASSIGNED TO THREE ELEMENT AREAS BY WORKSHOP GROUPS

	$ Million								
	Half Base Funding			Base Funding			Double Base Funding		
	Group			Group			Group		
Element Area	A	B	C	A	B	C	A	B	C
Large Power Systems Storage Development (Elements 1-4)	2.4	2.0	1.5	4.2	3.7	3.0	6.5	4.4	6.0
Small Power Systems Storage Development (Elements 5-6)	0.5	1.0	1.0	1.2	1.8	1.9	3.0	2.9	5.0
Advanced Storage Technology Research (Element 7)	0.6	0.5	1.0	1.6	1.5	2.1	4.5	2.0	3.0
TOTAL	3.5	3.5	3.5	7.0	7.0	7.0	14.0	9.3	14.0

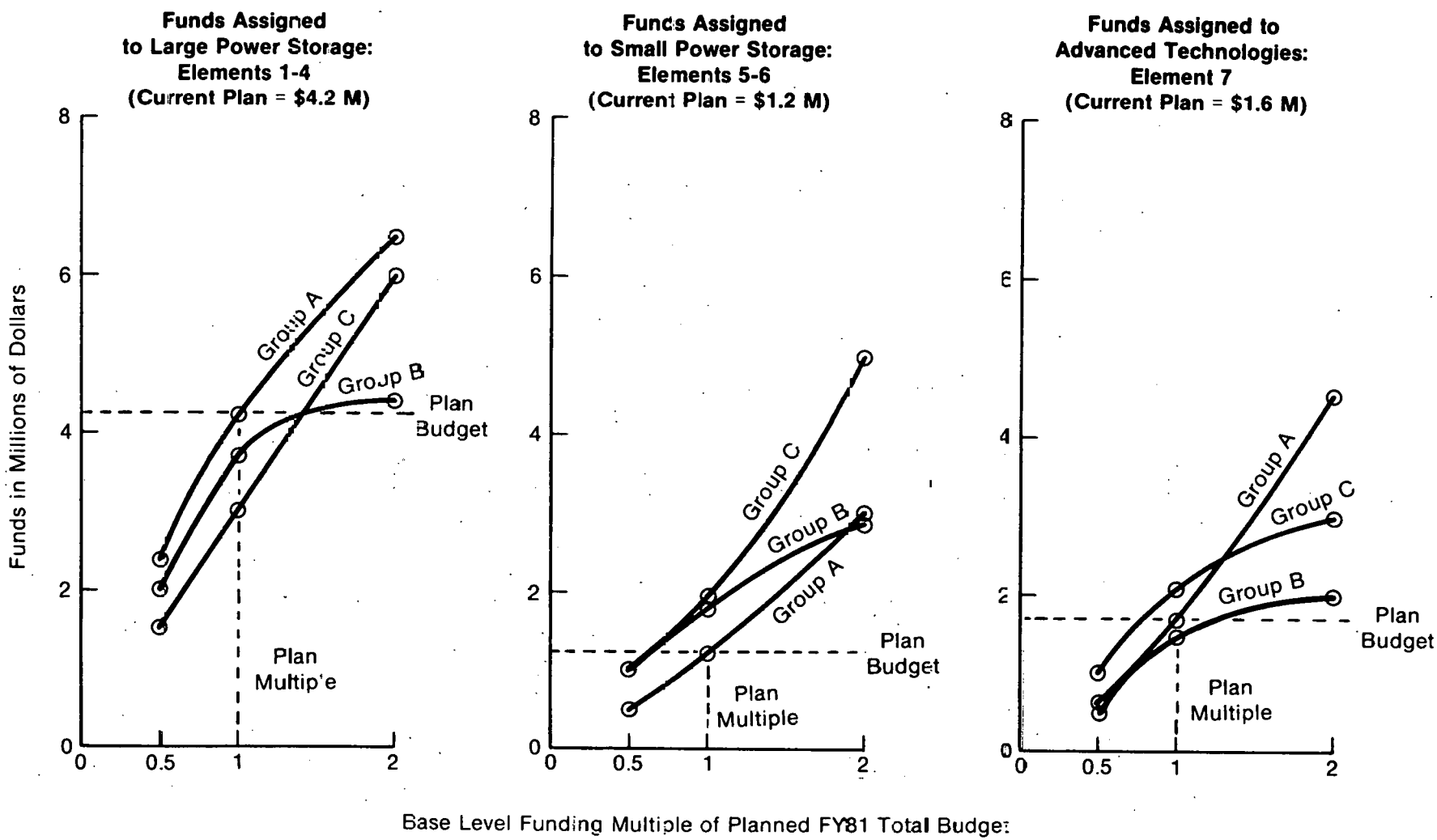

Figure 4-1. Funds Assigned to Element Areas By Three Workshop Groups As Funding Multiple Changes

5.0 ISSUES

Is the distribution of program emphasis reasonable for large power ($38.2M) versus small power ($5.3M) versus advanced technology ($21.3M with planning wedge)?

From the budget planning results of the open session, it appears that the participants felt the distribution of program emphasis for large power versus small power versus advanced technology was generally reasonable; however, a slight shift was considered desirable from large to small power.

Are any elements receiving too little attention? Is the following distribution reasonable: $8.0M for storage for liquid metals receivers, $5.7M for storage for gas-cooled receivers, $8.9M for storage for steam receivers, and $15.6M for storage for molten-salt receivers? Is the $2.8M for storage for organic receivers and $2.3M for storage for latent-heat receivers reasonable? Is advanced technology receiving enough emphasis?

The multiyear plan is again basically on target as shown in the open discussion of the budget, although a slight increase in latent-heat receiver storage is desired relative to organic fluid receivers. The funding pattern for organic receivers should be changed to a more constant distribution.

Are there other elements that should be incorporated into the program? Should there be additional elements in large power storage, small power storage, or advanced technology?

No additional elements were decided upon for the program. Group A brought up the possibility of support for TPS cogeneration system studies but little discussion followed. Group B felt thermal transport at enhanced conditions should be included. A question was raised as to whether there was really a need for thermal transport R&D since this may be only an engineering design problem. Various participants emphasized the need for better piping, fluids, and heat transfer methods for thermal transport. The transport problem was shown to be significant for distributed systems; a small operation like the Shenandoah Solar Thermal Project has six miles of pipes. Group C suggested storage for 350°F receivers was desirable, but the rest of the session discounted the need.

As mentioned before, Group C spent a considerable part of their session identifying subelements for the Advanced Technology Element. One subelement proposed was entitled "New Concepts." This subelement was further divided into thermal storage below 1000°F, between 1000°F and 1800°F, and above 1800°F. Each of these categories included research on heat transfer, heat exchangers, materials, and thermophysical properties. There was some unresolved disagreement, both within Group C and the general session, as to whether the research should be split according to temperature ranges, or by sensible versus latent versus reversible reaction storage. Many felt that the 1000°F split was very arbitrary but that the 1800°F break was logical because of material problems.

Heat transport and long-duration storage were other subelements identified by Group C. In addition to current systems analysis work, a need was identified for subelements in market/applications identification, technology information dissemination, standards, administration, and program evaluations. The latter activities, however, should be grouped into a separate new element rather than included in advanced technology because they support the other six receiver-related storage elements. Furthermore, the planning

wedge for development of another receiver-related storage technology later in the program should be in yet another element. Both of these changes are needed to clearly show the program structure.

Group C planned support for the below-1000°F storage research to be highest in FY81, phasing down in FY82, and concluding in FY83. The midtemperature research would receive approximately level funding over the remaining program period from FY81 to FY85 while the high-temperature research funds would increase from FY81 to FY85. About 70% of the element funds would be used for the "new concepts" activities. Heat transport would receive a constant 20% of the funding over the program life, while the market analysis and systems work would receive a constant 10% of the funds. It was stressed that new concepts should be funded only if applications can be identified, improvement over first- and second-generation storage options is possible, and the market size is significant.

Which elements should receive major emphasis in FY81? FY82? Are the funding distributions correct as a function of time?

The issue related to element emphasis for FY81 is discussed in Section 4.0. FY82 funding was not discussed adequately to report meaningful results.

Should this program support TPS system requirement and conceptual design studies regarding storage? Should additional storage systems work be funded by STOR?

No additional systems analyses beyond current efforts were favored to be included in the program. Additional optimization and tradeoff studies needed to further define the solar thermal system configurations were agreed to be the responsibility of TPS since tradeoffs are involved between thermal storage and the solar thermal system. Those involved in the solar thermal area were felt to be most capable of judging such tradeoffs. If TPS does not do the needed systems analysis, then such analysis should be added to the joint Thermal Energy Storage for Solar Thermal Applications Program. Group A cited the need for applications analysis for identifying potential uses of innovative storage concepts.

How do we establish priorities among the program elements? If funding is cut, how should the cut be made—across the board or defer one or two elements.? What criteria should be used for establishing budget splits? Weigh the following criteria with regard to their relative values: capital cost goals, O&M, applications (quads), environment and safety, value, R&D costs, performance, and reliability.

The question of element priorities was not considered extensively. All the criteria identified were agreed to be important, with some emphasis on capital cost, value, and O&M costs.

What should be the split in funding among first-, second-, and third-generation storage technologies in the program? What is the overall program philosophy?

Problems were encountered in defining first-, second-, and third-generation storage technologies. The definition offered by W. Wilson of Sandia in his presentation (Appendix D) was that the program funds would be used to develop (1) second-generation storage subsystems offering cost/performance improvements over the first-generation storage subsystems currently being developed for solar thermal power applications; (2) first-generation storage subsystems for solar thermal applications that have no storage subsystems

under development; and (3) a technology base (third generation) to support storage subsystem development for future solar thermal power applications. On the other hand, J. Calogeras indicated in his presentation that the engineering development support for first-generation storage technology was for existing systems. The eventual resolution seemed to favor the latter definition, although confusion on this point may have continued to cause difficulty in the splits identified by the groups.

The preferred split for first-, second-, and third-generation storage technology funding varied among the groups. Group A identified a 40%/50%/10% split, Group B advocated a 10%/70%/20% split, and Group C favored a 10%/60%/30% breakdown. There was considerable disagreement on the 40% first-generation split; many participants felt it was excessive but others believed it was needed to get good data. However, in summary, it appears that about two-thirds of the program should support second generation, the larger portion of the remaining funds should fund third generation, and the rest should go to first generation.

How do we decide when to transfer second-generation storage technologies to TPS?

The split in responsibilities between CST and STOR was considered only briefly. Group B indicated that CST should define the system requirements and perform trade-off studies. Then STOR should develop the appropriate storage technology through the subsystem research experiment (SRE) scale. Finally, CST would integrate the storage device into a solar thermal application, test it in the system, and evaluate the performance. Group A indicated that the transfer of the storage concept should occur as soon as the technology performance was demonstrated to the first engineering scaleable storage system.

By what mechanism can the program results be judged? What should be the overall program evaluation criteria? Comment on $/MBtu, reasonable goals and progress, information transfer (meetings, reports, patents, etc.), and industrial interest and involvement.

Only Group A dealt with how to judge the program results. The group members felt the most important criterion is demonstrated progress toward reasonable goals. They also felt information transfer is essential. They further indicated that CST should define storage cost and performance targets to STOR in the TPS MYPP. The group also indicated a need to reassess definitions of such terms as "large" and "small" and suggested breakdowns by technology as more appropriate; e.g., "molten salt" or "liquid metal." An alternate suggestion was use of the terms "direct" and "indirect" storage, depending upon whether the receiver fluid or a different material is the storage media. Considerable debate followed on this issue of names. Workshop attendees disliked the "large" and "small" designations.* The identification of element 6 was offered as an example of awkward nomenclature. The "direct" and "indirect" storage terms were believed to be indicative of storage cost with direct storage likely to have at least a lower power-related cost. Energy-related costs, power-related costs, and efficiencies were defined as important parameters to be reported for storage. A large number of possible designations were pointed out, such as "central" and "distributed," "line focus" and "point focus," "direct" and "indirect," and "sensible" and "latent," but none of these options is satisfactory. The best compromise was felt to be the designation by receivers

*These terms were only used as a basis for group formation at the workshop and are not part of the program plan.

used in the MYPP. However, to help clarify this issue, J. Gahimer directed Sandia/Livermore to prepare a matrix of storage technologies versus possible applications.

What performance requirements do you see needed for second-generation storage? Should reliability or O&M goals be stated in addition to cost goals? What breakthroughs in thermal energy storage would have a major impact on solar thermal performance and energy costs? What is the major limitation of thermal energy storage that hurts solar thermal system performance and energy costs?

These issues were treated only minimally. A need was identified for CST to better define its storage needs. In addition, improvements of heat transfer rates in latent heat storage, storage response times, and material lifetimes were deemed important.

Is there a national need for a solar energy storage program? How important is federal involvement? What is the appropriate federal role? Which strategic thrusts are most effective?

This set of issues was considered significant. Some asked why thermal storage should be developed for solar thermal applications. The market for systems without storage is appreciable, and if it is possible to commercialize solar thermal systems without storage, why not let someone else develop the storage technologies? Storage is not a big item (about 10%) in the cost of a solar thermal plant, and funding of development does not seem necessary. Furthermore, a need for storage has not been defined in the proposals recently received for repowering.

A variety of responses were offered to these questions. No storage was included in repowering because none was requested in the solicitation; many of the attendees felt that storage would not be included unless requested. Storage was pointed out to be valuable for electric power generation, offering the prospect of actually lowering energy costs. It was doubted, however, that this reasoning holds for process heat. The markets for solar thermal systems were also indicated to be quite small without inclusion of storage. The workshop participants generally agreed that the role for storage should be identified and that appropriate systems and market analyses are required. Since, in general, there seemed to be no strong advocacy of storage, some promotion of storage seems worthwhile once development of storage is demonstrated to be important.

6.0 OTHER ISSUES

A problem related to the need for storage was discussed. The CST managers had understood that the funds transferred to STOR were to be used only as seed money and that STOR would soon budget the funds. However, CST was continuing to defend the budget while STOR managed the dollars. This split was viewed as undesirable; either STOR should defend the budget and direct the work or CST should do both. Furthermore, as a result of the DOE reorganization, STOR and CST will report through different offices and be in different buildings, which will cause communication problems. In addition, it was believed that the present management structure was placing more taxes on the funds and less resources were actually reaching the developers.

A number of the participants thought that placing the storage work in the CST program was undesirable. Management by STOR was felt to provide synergisms, in that development of thermal storage for solar thermal systems will benefit by the work on other thermal storage programs. It also ensures a good follow-through and minimizes duplication of efforts. Improved thermal storage technologies were also felt to receive more attention under STOR management; under CST control, mostly first-generation storage would be developed. CST might use the storage money for other work deemed more critical, and the result could be minimal development of thermal storage technologies. Also, enthusiasm was expressed for the current rate of progress. Finally, some felt there were real benefits to workshops such as this one, where STOR could serve as a "neutral" middleman to judge the solar thermal needs.

It was agreed that the best choice is for STOR to defend the program budget as well as provide the management. If this reassignment of responsibilities is not possible, more than half of the participants representing CST and STOR favored the present structure to turning the entire program over to CST.

A need was indicated for facilities to test storage systems and obtain data. The storage system for Shenandoah, for example, will not be sufficiently tested before installation, and once it is in place, it will be difficult to try out modifications or obtain good data. Therefore, such large installations are not adequate test facilities. Test facilities for storage need not be actual solar installations, but they should be capable of providing similar energy capabilities and requirements.

A point was raised that better communication is needed between the thermal storage and solar thermal programs. Workshop participants also thought that communication should be improved within the thermal storage program.

7.0 FUTURE WORKSHOP PLANS

Finally, it was agreed that another workshop would be worthwhile. The next could include a day-long review of program results since the R&D will have been in progress for over a year. This review should occur annually and include one day for interactive planning. January is a good time to meet because the budget process can be impacted more easily. It was suggested that more background data from both STOR and CST be provided before the meeting. Following apparently unanimous agreement on the desirability of another meeting, the workshop was adjourned.

APPENDIX A

SECOND THERMAL STORAGE APPLICATIONS WORKSHOP ATTENDEES

San Antonio, Texas
7-8 February 1980

Jim Calogeras
NASA Lewis Research
21000 Brookpark Road
Cleveland, OH 44135
216/433-4000 FTS 294-6170

Robert Copeland
SERI
1617 Cole Blvd.
Golden, CO 80401
303/231-1012 FTS 327-1012

Ron Edelstein
SERI
1617 Cole Blvd.
Golden, CO 80401
303/231-1364 FTS 327-1364

William A. Frier
Battelle Pacific Northwest Labs.
2030 M Street, NW
Washington, DC 20036
202/376-5896 FTS 376-5896

John Gahimer
DOE/STOR
600 E. Street, NW
Washington, DC 20585
202/376-4013 FTS 376-4013

Colin E. Hackett
Sandia Laboratories
Division 8452
Livermore, CA 94550
415/422-2172 FTS 532-2172

Raymond W. Harrigan
Sandia Laboratories
Albuquerque, NM 87110
505/264-3004 FTS 475-3004

George Kaplan
DOE/TPS
600 E. Street, NW
Washington, DC 20585
202/376-1935 FTS 376-1935

Mike Karpuk
SERI
1617 Cole Blvd.
Golden, CO 80401
303/231-1932 FTS 327-1932

Ron Larson
SERI
1617 Cole Blvd.
Golden, CO 80401
303/231-1025 FTS 327-1025

Phillip Legendre
The Aerospace Corporation
20030 Century Blvd.
Germantown, MD 20760

Ram Manvi
Jet Propulsion Laboratory
4800 Oak Grove Drive
Pasadena, CA 91103
FTS 792-9349

Frank Newman
The Aerospace Corporation
20030 Century Blvd.
Germantown, MD 20760
301/428-2746

Arno W. Nice
NASA Lewis Research Center
21000 Brookpark Road
Cleveland, OH 44135
216/433-4000 FTS 294-6314

Lee G. Radosevich
Sandia Laboratories
P. O. Box 969
Livermore, CA 94550
415/422-2648 FTS 532-2648

Vincent C. Truscello
Jet Propulsion Laboratory
4800 Oak Grove Drive
Pasadena, CA 91103
213/577-9367

William G. Wilson
Sandia Laboratories
Livermore, CA 94550
415/422-2326 FTS 532-2326

Jed F. Woolley
The Aerospace Corporation
955 L'Enfant Plaza SW
Suite 4000
Washington, DC 20024
202/488-6157

Charles E. Wyman
SERI
1617 Cole Blvd.
Golden, CO 80401
303/231-1753 FTS 327-1753

APPENDIX B

SECOND THERMAL STORAGE APPLICATIONS WORKSHOP AGENDA

San Antonio, Texas
7-8 February 1980

Thursday, February 7

7:30 - 8:30 a.m.	Registration	
Overview		
8:30 - 8:40 a.m.	Welcome	J. Gahimer DOE - STOR
8:40 - 8:45 a.m	Introduction	C. Wyman SERI
8:45 - 9:00 a.m.	Background and Objectives	J. Calogeras NASA LeRC
9:00 - 9:45 a.m.	Focused Development of Thermal Storage for Solar Thermal Applications	W. Wilson SLL
9:45 - 10:30 a.m.	Technology Base Activities	C. Wyman R. Copeland SERI
10:30 - 10:45 a.m.	Break	
Discussion		
10:45 - 12:00 Noon	Key Issues and Group Formation	R. Larson Discussion Leader SERI
12:00 - 1:30 p.m.	Lunch	
1:30 - 4:30 p.m.	Meetings of Discussion Groups Group 1 - Large Power Systems/Central Receiver Group 2 - Small Power Systems/Distributed Collectors Group 3 - Advanced Technology	

Friday, February 8

8:30 - 10:00 a.m.	Workshop Results - Group Reports	Group Leaders
10:00 - 10:15 a.m.	Break	
10:15 - 12:00 Noon	Critique and Resolution of Issues	R. Larson, Leader SERI
12:00 Noon	Workshop Adjourns	

APPENDIX C

SECOND THERMAL STORAGE APPLICATIONS WORKSHOP

GROUP PARTICIPANTS

San Antonio, Texas
7-8 February 1980

A. Large Power	B. Small Power	C. Advanced Technology
W. Frier	J. Calogeras	R. Copeland
C. Hackett	J. Gahimer	R. Edelstein*
G. Kaplan	R. Harrigan	R. Manvi
M. Karpuk	P. Legendre	A. Nice
F. Newman*	L. Radosevich	J. Woolley
W. Wilson	V. Truscello*	C. Wyman

*Group Leader

SERI

APPENDIX D

SECOND THERMAL STORAGE APPLICATIONS WORKSHOP PRESENTATIONS

THERMAL ENERGY STORAGE
FOR
SOLAR THERMAL APPLICATIONS

- PROGRAM BACKGROUND, OBJECTIVES -

BY
JAMES E. CALOGERAS
NASA LEWIS RESEARCH CENTER
CLEVELAND, OHIO

FOR PRESENTATION AT SECOND THERMAL STORAGE
APPLICATIONS WORKSHOP, SAN ANTONIO, TEXAS
FEBRUARY 7-8, 1980

PROGRAM BACKGROUND

- KEY EVENTS -

o DOE/CST-STOR WORKSHOP - TASK FORCE ESTABLISHED - LeRC LEAD CENTER FOR PLAN	FEBRUARY 15, 1978
o FIRST DRAFT OF MYPP PLAN - $35M, FY 80-85 - SYSTEM RETROFITS REQUIRED	SEPTEMBER 13, 1978
o MAJOR STATUS REVIEW WITH DOE - 'PUBLIC' PLAN APPROVED FOR RELEASE - 'APPROVAL' PLAN REQUESTED	FEBRUARY 6, 1979
o DISTRIBUTION OF 'PUBLIC' PLAN - APPROXIMATELY 500 COPIES - REQUIRED SECOND PRINTING	APRIL 4, 1979
o LeRC, SLL, SERI AGREEMENT - LEAD CENTER, LEAD LABORATORY ROLES - COST GOALS ESTABLISHED	APRIL 11-12, 1979
o FIFTH DRAFT OF MYPP - $35-$65M, FY 80-85 - APPROVED BY DOE/CST & STOR	OCTOBER 25, 1979

PROGRAM OBJECTIVES

- DEVELOP 2ND GENERATION STORAGE SUBSYSTEMS OFFERING <u>SUBSTANTIAL</u> COST/PERFORMANCE IMPROVEMENTS

- ESTABLISH TECHNOLOGY BASE FOR 3RD GENERATION STORAGE CONCEPTS

- PROVIDE ENGINEERING DEVELOPMENT SUPPORT FOR 1ST GENERATION STORAGE TECHNOLOGIES

THERMAL ENERGY STORAGE PROGRAM STRUCTURE

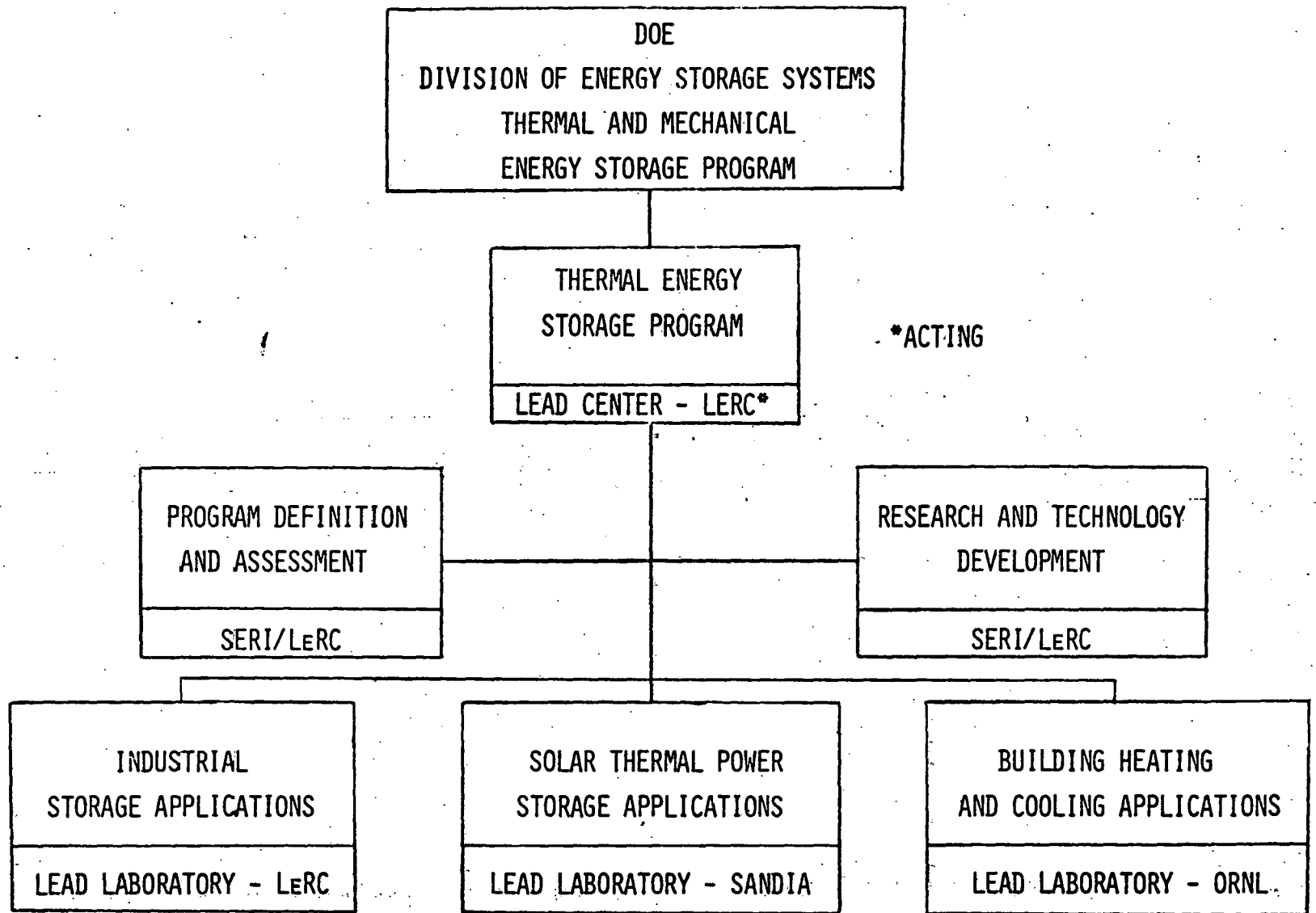

FOCUSED ELEMENTS

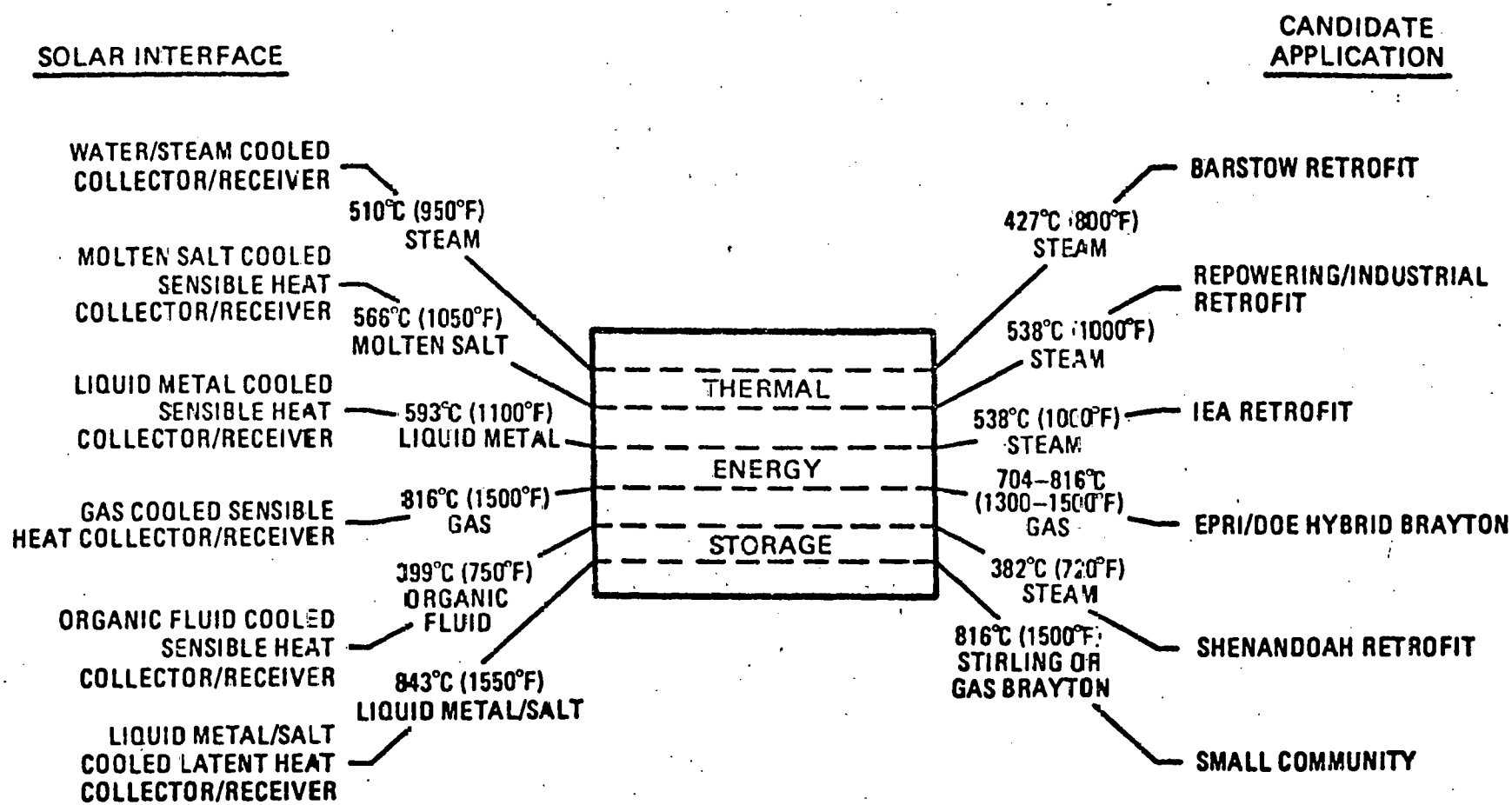

TECHNOLOGY BASE ACTIVITIES

SYSTEMS ANALYSES AND TECHNOLOGY ASSESSMENT

- o VALUE ANALYSES
- o COST AND PERFORMANCE ANALYSES

ADVANCED TECHNOLOGIES R&D

- o THERMOCHEMICAL STORAGE AND TRANSPORT STUDIES
- o DIRECT CONTACT HEAT EXCHANGE FOR LATENT HEAT STORAGE
- o NEW CONCEPTS DEFINITION
- o VERY HIGH TEMPERATURE MEDIA, MATERIALS STUDIES

PROGRAM COORDINATION/INTEGRATION

- o SOLAR HVAC AND IPH ACTIVITIES

ADMINISTRATION, PLANNING AND REVIEWS

FY 80 FOCUSED DEVELOPMENTS

	FY 80 FUNDING* ($K)
REPOWERING/INDUSTRIAL RETROFIT APPLICATIONS	2200
o MOLTEN SALT SENSIBLE HEAT STORAGE	
o MID-TEMPERATURE LATENT HEAT STORAGE	
TOTAL ENERGY SYSTEM APPLICATIONS	500
o SINGLE/DUAL MEDIA THERMOCLINE EXPERIMENTS	
o MID-TEMPERATURE LATENT HEAT STORAGE	
SMALL COMMUNITY SYSTEM APPLICATIONS	700
o STORAGE CONCEPT DEFINITIONS	
o HIGH TEMPERATURE LATENT HEAT MEDIA STUDIES	
o PRELIMINARY DESIGN OF SRE	
	3400

*LEAD LABORATORY APPROVED BO

FY 80 TECHNOLOGY BASE ACTIVITIES

	FY 80 FUNDING* ($K)
SYSTEM ANALYSES AND TECHNOLOGY ASSESSMENT	300
o VALUE ANALYSES	
o COST AND PERFORMANCE ANALYSES	
- TECHNOLOGY RANKING	
ADVANCED TECHNOLOGIES R&D	400
o THERMOCHEMICAL STORAGE AND TRANSPORT STUDIES	
o DIRECT CONTACT HEAT EXCHANGE FOR LATENT HEAT STORAGE	
o NEW CONCEPTS DEFINITIONS	
o VERY HIGH TEMPERATURE MEDIA STUDIES	
PROGRAM COORDINATION/INTEGRATION	150
o COORDINATE SOLAR HVAC AND IPH ACTIVITIES	
ADMINISTRATION, PLANNING AND REVIEWS	150
	1000

*SERI APPROVED BA

FOCUSED DEVELOPMENT OF THERMAL STORAGE FOR SOLAR THERMAL APPLICATIONS

William G. Wilsor
Sandia Laboratories, Livermore

PROGRAM OBJECTIVES

DEVELOP GENERAL SOLAR THERMAL ENERGY STORAGE TECHNOLOGIES THAT PROVIDE:

- Second-generation storage subsystems offering cost/performance improvements over the first-generation storage subsystems currently being developed for solar thermal power applications.

- First-generation storage subsystems for those solar thermal applications that presently have no storage subsystems under development.

- A technology base to support storage subsystem development for future solar thermal power applications.

SOLAR THERMAL POWER STORAGE APPLICATIONS

Lead Center: NASA LeRC
Lead Laboratory: Sandia Livermore

- RESPONSIBILITY FOR IMPLEMENTATION OF FIRST TWO OBJECTIVES
- STORAGE DEVELOPMENT KEYED TO SPECIFIC COLLECTOR/RECEIVER TECHNOLOGIES
- REPRESENTATIVE APPLICATIONS DEFINED TO PROVIDE A DEVELOPMENT FOCUS
- COST AND PERFORMANCE GOALS ESTABLISHED FOR FIRST AND SECOND GENERATION STORAGE TECHNOLOGIES FOR EACH APPLICATION
- STORAGE DEVELOPMENT INITIATED IN SUPPORT OF HIGH PRIORITY APPLICATIONS

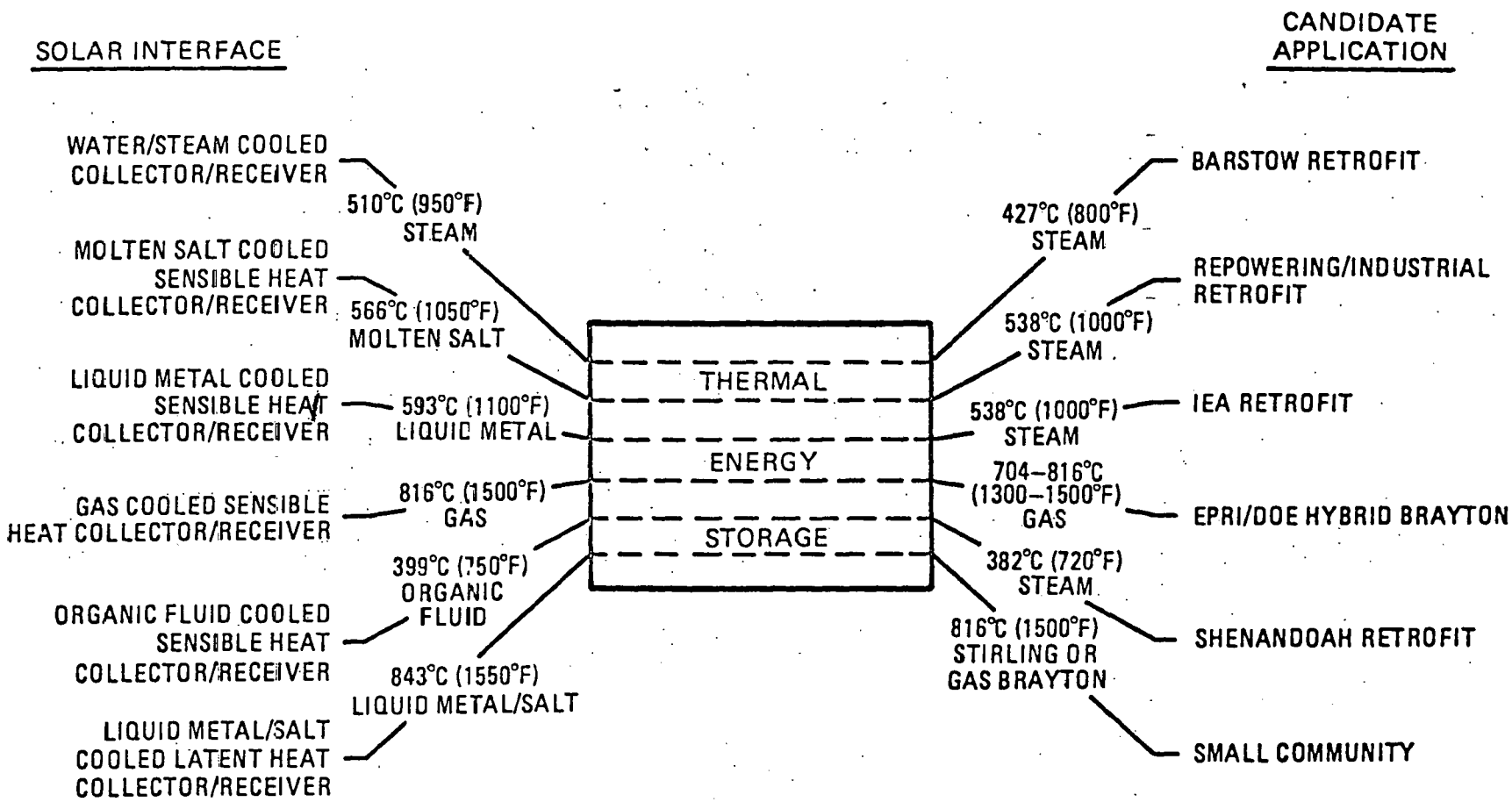

FOCUSED ELEMENTS

DESCRIPTION OF FIRST AND SECOND GENERATION THERMAL ENERGY STORAGE TECHNOLOGIES

APPLICATION*	SOLAR INTERFACE	STORAGE TECHNOLOGY FIRST GENERATION	STORAGE TECHNOLOGY SECOND GENERATION
BARSTOW	WATER/STEAM COLLECTOR/RECEIVER	OIL/ROCK THERMOCLINE	SALT, TRICKLE OIL
REPOWERING	MOLTEN SALT COLLECTOR/RECEIVER	MOLTEN SALT WITH EXTERNAL INSULATION	MOLTEN SALT WITH INTERNAL INSULATION
IEA	LIQUID METAL COLLECTOR/RECEIVER	LIQUID METAL WITH EXTERNAL INSULATION	MOLTEN SALT OR LIQUID METAL WITH INTERNAL INSULATION, AIR/ROCK
EPRI/DOE HYBRID	GAS COLLECTOR/RECEIVER	REFRACTORY BRICK WITH WELDED STEEL TANK	REFRACTORY BRICK WITH PCIV
SHENANDOAH	ORGANIC FLUID COLLECTOR/RECEIVER	SILICONE OIL/TACONITE THERMOCLINE	SALT, TRICKLE OIL
SMALL COMMUNITY	LIQUID METAL/ SALT COLLECTOR/ RECEIVER	REFRACTORY WITH WELDED STEEL TANK-GROUND BASED	LATENT HEAT SALT-DISH MOUNTED

*Storage development for these representative applications is emphasizing second generation technology development. First generation technology development will be initiated during FY80 on additional applications, such as industrial retrofit process heat.

THERMAL ENERGY STORAGE PERFORMANCE AND COST GOAL SUMMARY (FY79 DOLLARS)

APPLICATION*	SOLAR INTERFACE	ROUND TRIP EFFICIENCY FIRST GENERATION (%)	ROUND TRIP EFFICIENCY SECOND GENERATION (%)	CAPITAL COST FIRST GENERATION ($/KWH)	CAPITAL COST SECOND GENERATION ($/KWH)	IMPROVEMENT (%)
BARSTOW	WATER/STEAM COLLECTOR/RECEIVER	70	80	46	35	24
REPOWERING	MOLTEN SALT COLLECTOR/RECEIVER	98	98	28	14	50
IEA	LIQUID METAL COLLECTOR/RECEIVER	98	98	100	43	57
EPRI/DOE HYBRID	GAS COLLECTOR/RECEIVER	80	80	88	61	31
SHENANDOAH	ORGANIC FLUID COLLECTOR/RECEIVER	96	96	51**	25**	51
SMALL COMMUNITY	LIQUID METAL/ SALT COLLECTOR/ RECEIVER	TBD	TBD	TBD	TBD	TBD

* Applications shown are all electrical power generating systems except for the total energy Shenandoah system. Performance and cost goals will be established for process heat applications pending completion of conceptual design studies in FY80.

**based on KWH_t; costs for other applications are based on KWH_e

SOLAR THERMAL POWER STORAGE APPLICATIONS

PROGRAM DEVELOPMENT FLOW CONSISTS OF THREE PHASES:

- STORAGE CONCEPT DEVELOPMENT
  - -- CONCEPT FEASIBILITY
  - -- LAB EXPERIMENTS
- STORAGE SUBSYSTEM DEVELOPMENT
- SYSTEM APPLICATIONS
  - -- NEW PROJECTS
  - -- RETROFITS

STORAGE FOR WATER/STEAM COOLED COLLECTOR/RECEIVER

STORAGE TECHNOLOGY STATUS*

- BARSTOW SRE COMPLETE
- McDONNELL DOUGLAS EXTENDED LIFE STORAGE FLUID TESTS COMPLETE
- MARTIN MARIETTA STORAGE FLUID MAINTENANCE TESTS COMPLETE

PLANNED DEVELOPMENT

- LONG TERM
  - Develop Storage Subsystem for Saturated Steam Receiver for Process Heat
  - Develop Second Generation Storage Subsystem for Repowering or Barstow Retrofit
- FY80
  - Initiate Storage Concept Development for above applications

*This work was funded under the TPS Program

STORAGE FOR MOLTEN SALT COOLED SENSIBLE HEAT COLLECTOR/RECEIVER

STORAGE TECHNOLOGY STATUS*

- CONCEPTUAL DESIGNS OF MOLTEN DRAW SALT STORAGE COMPLETE
- LABORATORY EXPERIMENTS OF LOW COST CONTAINMENT TECHNIQUES COMPLETE
- COMPARISON OF THERMOCLINE VS. HOT/COLD TANK DESIGNS COMPLETE
- PRELIMINARY STORAGE AND CONTAINMENT MATERIAL SCREENING TESTS COMPLETE

PLANNED DEVELOPMENT

- LONG TERM
  - Develop Second Generation Storage Subsystem using Internal Insulation for Repowering
- FY80
  - Complete Internal Insulation Storage Concept Development
  - Initiate SRE
  - Perform Salt Chemistry/Corrosion Studies

* This work was funded under the TPS Program.

STORAGE FOR LIQUID METAL COOLED SENSIBLE HEAT COLLECTOR/RECEIVER

STORAGE TECHNOLOGY STATUS*	PLANNED DEVELOPMENT
● CONCEPTUAL DESIGN OF LIQUID SODIUM STORAGE FOR CENTRAL RECEIVERS COMPLETE	● LONG TERM - Develop Second Generation Storage Subsystem for Central Receiver Repowering or IEA Retrofit Applications
● NO ADDITIONAL DEVELOPMENT WORK REQUIRED FOR FIRST GENERATION SYSTEM	● FY80 - Complete Low Level Planning Activities - Complete Laboratory Air/Rock Thermal Cycling Tests

*This work was funded under the TPS Program.

STORAGE FOR GAS COOLED SENSIBLE HEAT COLLECTOR/RECEIVER

STORAGE TECHNOLOGY STATUS *

- CONCEPTUAL DESIGN OF REFRACTORY BRICK STORAGE FOR CENTRAL RECEIVERS COMPLETE
- DESIGN AND FABRICATION OF A GROUND BASED REFRACTORY STORAGE TEST MODULE FOR A POINT FOCUSING DISH COMPLETE

PLANNED DEVELOPMENT

- LONG TERM
  - Develop Second Generation Storage Systems using PCIV containment or Latent Heat Media for EPRI/DOE Hybrid Brayton Retrofit
  - Develop Latent Heat Storage for Point Focusing Dishes
- FY80
  - Complete Tests of Refractory Storage Test Module
  - Initiate Latent Heat Storage Concept Development for Point Focusing Dishes

* This ork was funded under the TPS Program.

STORAGE FOR ORGANIC FLUID COOLED SENSIBLE HEAT COLLECTOR/RECEIVER

STORAGE TECHNOLOGY STATUS*

- CONCEPTUAL DESIGN & LABORATORY TESTS OF TRICKLE OIL STORAGE FOR SHENANDOAH COMPLETE
- SHENANDOAH WILL INCLUDE FLEXIBILITY FOR TRICKLE OR DUAL MODE MODE TESTING - THEREFORE NO TRICKLE OIL SRE IS CURRENTLY PLANNED
- SINGLE MEDIA THERMOCLINE TANK DESIGN AND FABRICATION FOR MSSTF TESTS COMPLETE
- SINGLE MEDIA THERMOCLINE SYSTEM FOR IRRIGATION APPLICATIONS OPERATIONAL

PLANNED DEVELOPMENT

- LONG TERM
  - Provide support for First Generation Storage Subsystems for Midtemperature Applications
  - Develop Second Generation Storage Subsystem for Midtemperature Applications
- FY80
  - Complete Single Media Thermocline Tests
  - Complete Dual Media Thermocline Tank Design
  - Initiate Second Generation Storage Concept Development

* This work was funded under the TPS Program.

STORAGE FOR LIQUID METAL/SALT COOLED LATENT HEAT COLLECTOR/RECEIVER

STORAGE TECHNOLOGY STATUS*	PLANNED DEVELOPMENT
● HEAT PIPE/MOLTEN SALT TEST MODULE DESIGN AND FABRICATION COMPLETE	● LONG TERM - Develop Storage Subsystems for Small Community System Applications using Rankine, Brayton and Stirling Power Conversion Cycles ● FY80 - Initiate dish Mounted Latent Heat Storage Requirements Definition and Concept Development - Initiate High Temperature Latent Heat Materials Studies - Initiate SRE Design

*This work was funded under the TPS Program.

SOLAR THERMAL POWER STORAGE APPLICATIONS
FY80 PLANNED PROCUREMENT SUMMARY

REPOWERING/INDUSTRIAL RETROFIT SYSTEM APPLICATIONS

- Molten Salt Sensible Heat SRE
- Molten Salt Materials Studies
  - Atmospheric Interactions
  - Thermal Conductivity
  - Thermal Convection Loops
  - Electrochemical Corrosion
- Second Generation Storage Concept Development (Latent and/or Sensible Heat) for Water/Steam Receivers
- Thermocline Heat Transfer Analysis

TOTAL ENERGY SYSTEM APPLICATIONS

- Dual Media Thermocline Tank Design and Fabrication
- Second Generation Storage Concept Development for Organic Fluid Receivers

SMALL COMMUNITY SYSTEM APPLICATIONS

- Latent Heat Storage Requirements Definition and Conceptual Designs for Point Focusing Dishes
- High Temperature Latent Heat Materials Studies
- Preliminary SRE Design

SOLAR THERMAL POWER STORAGE APPLICATIONS
FY80 IN-HOUSE TECHNICAL SUMMARY

REPOWERING/INDUSTRIAL RETROFIT SYSTEM APPLICATIONS

- Molten Salt Materials Studies (SLL)
  - Salt Degradation
  - Thermophysical Properties
  - Thermal Convection Loops
  - Electrochemical Corrosion
- Air/Rock Thermal Cycling (SLL)

TOTAL ENERGY SYSTEM APPLICATIONS

- Single Media Organic Fluid Thermocline Testing (SLA)
- Organic Fluid Extended Life Testing (SLL)

SMALL COMMUNITY SYSTEM APPLICATIONS

- High Temperature Latent Heat Materials Studies (JPL)

SUMMARY - FY80 FOCUSED DEVELOPMENT

- REPOWERING/INDUSTRIAL RETROFIT SYSTEM APPLICATIONS
  - Molten Salt Sensible Heat Storage
  - Second Generation Storage Concept Development for Water/Steam Receivers
- TOTAL ENERGY SYSTEM APPLICATIONS
  - Organic Fluid Thermocline Testing
  - Second Generation Storage Concept Development for Organic Fluid Receivers
- SMALL COMMUNITY SYSTEM APPLICATIONS
  - Dish Mounted Latent Heat Storage Concept Development for Point Focusing Dish Collectors

FY80 PLANNED ACTIVITIES

1) ANALYZE VALUE OF THERMAL STORAGE SUBSYSTEMS IN A PROCESS HEAT APPLICATION.

2) AWARD SUBCONTRACT TO STEARNS-ROGER ON COST AND PERFORMANCE OF THERMAL STORAGE CONCEPTS AND RANK CONCEPTS FOR:

   A) WATER/STEAM COLLECTOR/RECEIVERS
   B) ORGANIC FLUID COLLECTOR/RECEIVERS
   C) GAS COLLECTOR/RECEIVER

3) CONDUCT AN IN-HOUSE STUDY OF GROUND MOUNTED THERMAL STORAGE FOR A DISH/STIRLING SYSTEM.

Element 7:

Advanced Technologies for Thermal Energy Storage for Solar Thermal Applications

Charles Wyman
Solar Energy Storage Program
Solar Energy Research Institute

Second Thermal Storage Applications Workshop

San Antonio, Texas
February 7, 1980

Element 7: Advanced Technologies

Advanced Technology Subelements:

- Systems Analyses and Assessments
- Advanced Technology Development
- New Concepts Definition
- Focused Development of Advanced Storage Technologies

FY80 Advanced Technology Activities:

- Systems Analysis of Thermal Storage for Solar Thermal Applications
- Direct Contact Latent Heat Storage
- Thermochemical Storage and Transport

Potential Advantages of Thermochemical Storage and Transport

- Low Temperature Storage of High Temperature Thermal Energy
  - Possible Seasonal or Near Seasonal Storage
  - Transmission of High Temperature Thermal Energy in Uninsulated or Lightly Insulated Pipelines
- Very High Energy Storage Densities
- Low Cost Materials
- Heat Pumping Capability

Thermochemical Transport of Solar Thermal Energy

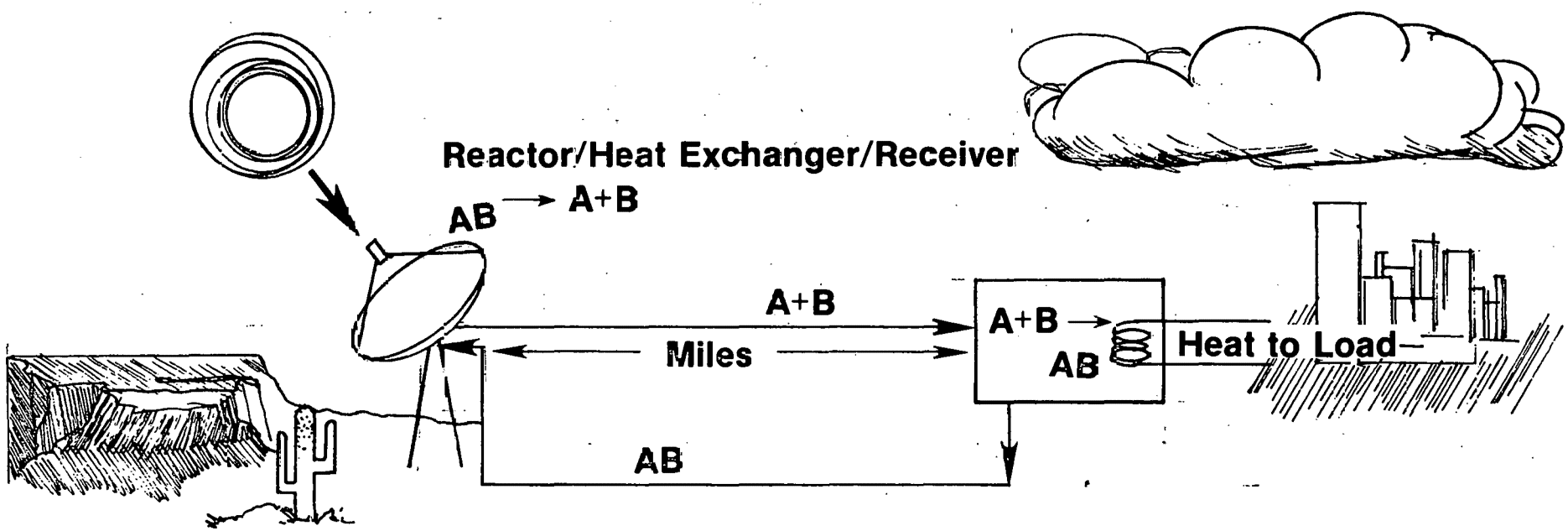

Fac ors Impacting Cost o Thermochemical Storage and Transport

- Heliostat-to-Electricity Efficiency through Thermochemical Cycle
- Material Costs
- Storage Costs
- Pressure Requirements
- Corrosiveness
- Heat Exchange Requirements
- Receiver Design
- Reactor Design

Thermochemical Storage and Transport Research

Objectives

- Define efficiency and cost constraints for thermochemical storage and transport
- Identify research needs for thermochemical storage and transport
- Provide quantitative knowledge of thermochemical storage and transport performance

Activities

- Developing analysis of thermodynamic constraints to system performance
- Examining reactor design alternatives to achieving energy absorption and release
- Will characterize reactions with potential for energy storage and/or transport

Latent Heat Storage

- Potential Advantages
  - Volume Reduction
  - Small Temperature Range
  - Reasonably Constant Temperature
- Factors Impacting Cost
  - Storage Capacity Costs
    - Material Costs
    - Containment Needs
    - Pressure Requirements
  - Power Costs
    - Heat Exchange Area
    - Pumping Requirements

Latent Heat Storage Research

Objectives

- Identify advanced heat transfer concepts for latent heat storage
- Define research needs for advanced latent heat storage heat transfer concepts
- Provide quantitative knowledge of advanced latent heat storage heat transfer performance

Factors Controlling Heat Transfer for Direct Contact Latent Heat Storage Systems

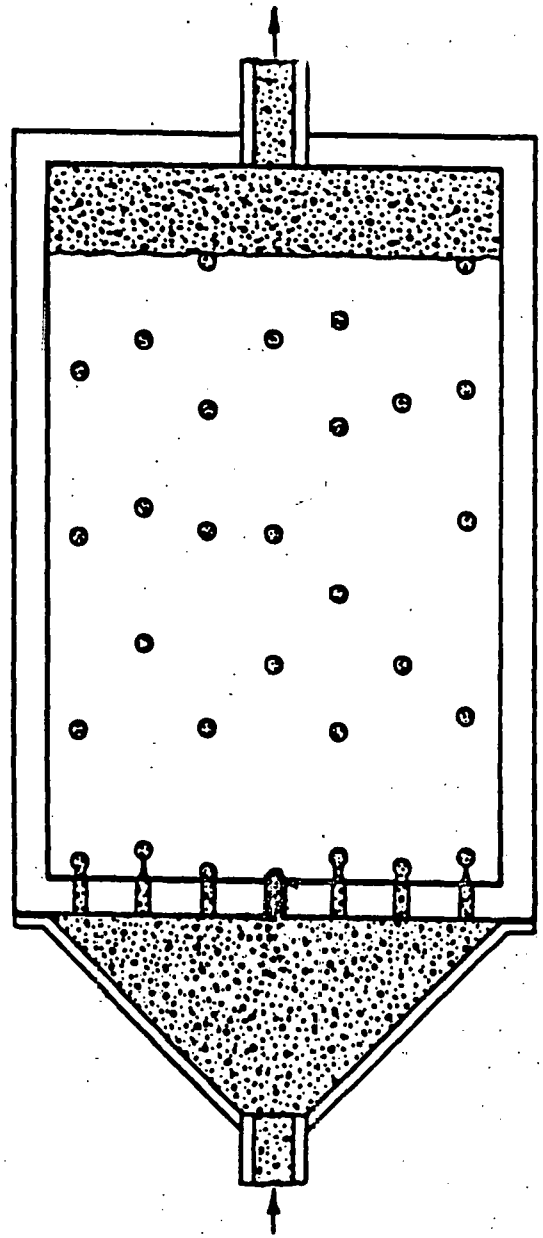

Dispersed Phase

1) Internal Hydrodynamics
   - Well Mixed
   - Circulating
   - Rigid
2) Holdup/Terminal Velocity
3) Drop Size

Continuous Phase

1) Viscosity
2) Density

Drop Size Prediction

- Theoretical work on jetting transition — point of maximum area
- Empirical correlations elsewhere
- Models often contradictory

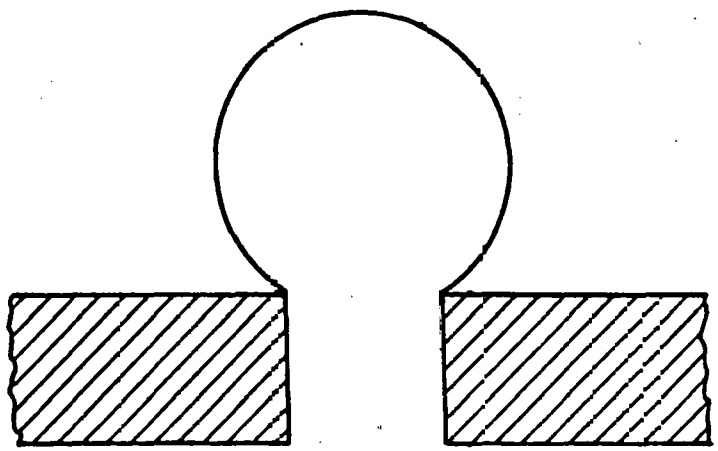

Dropwise Formation

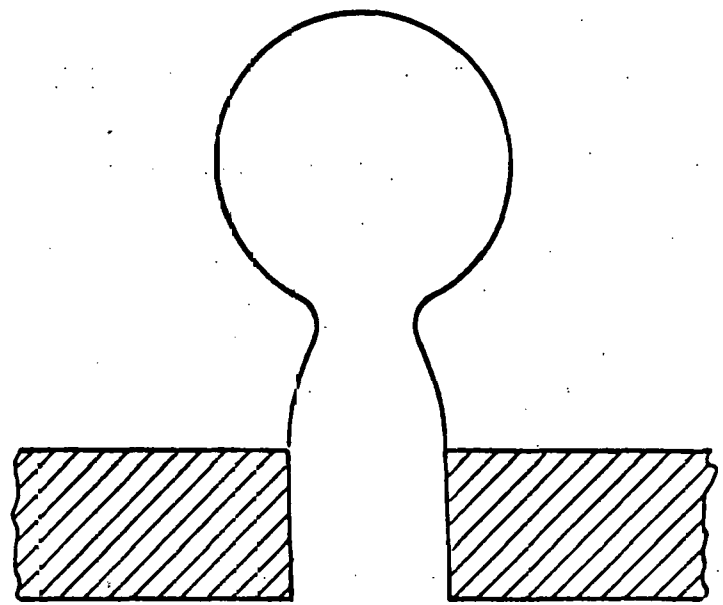

Jetting

Holdup/Terminal Velocity

Hindered terminal velocity dependent on unhindered terminal velocity and free area for flow

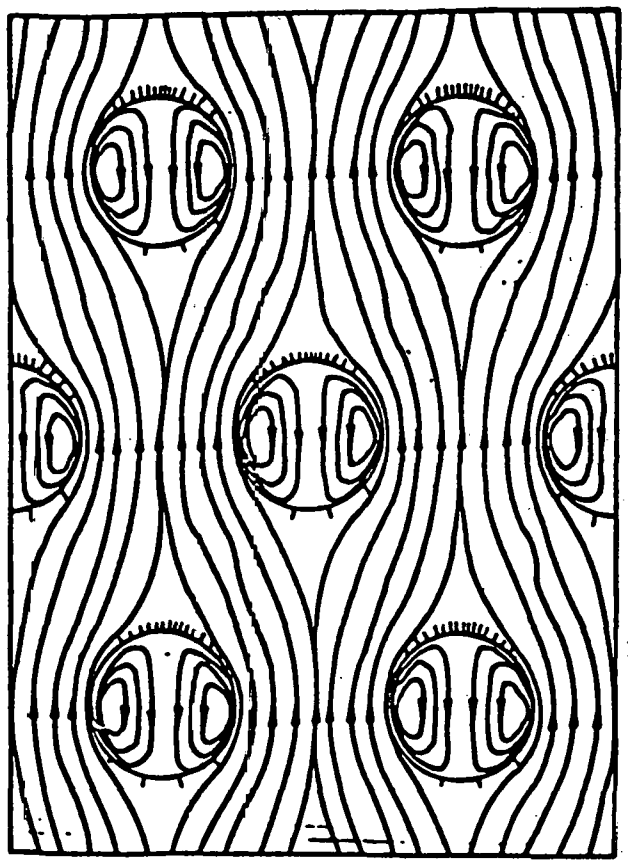

10% Holdup

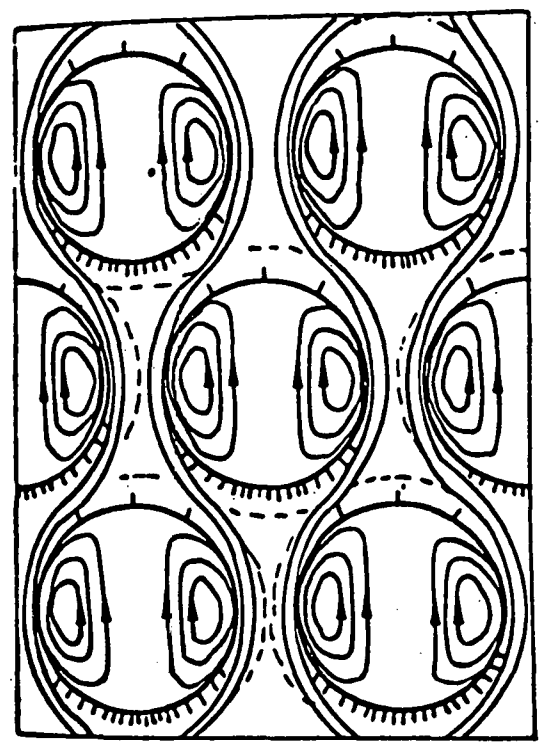

50% Holdup

Heat Transfer Mechanism

Heat transfer rate primarily a function of internal drop hydrodynamics

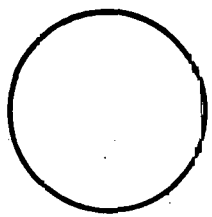

Rigid

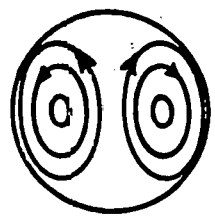

Circulating

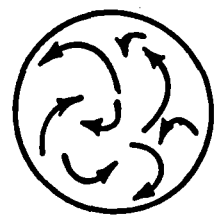

Well Mixed

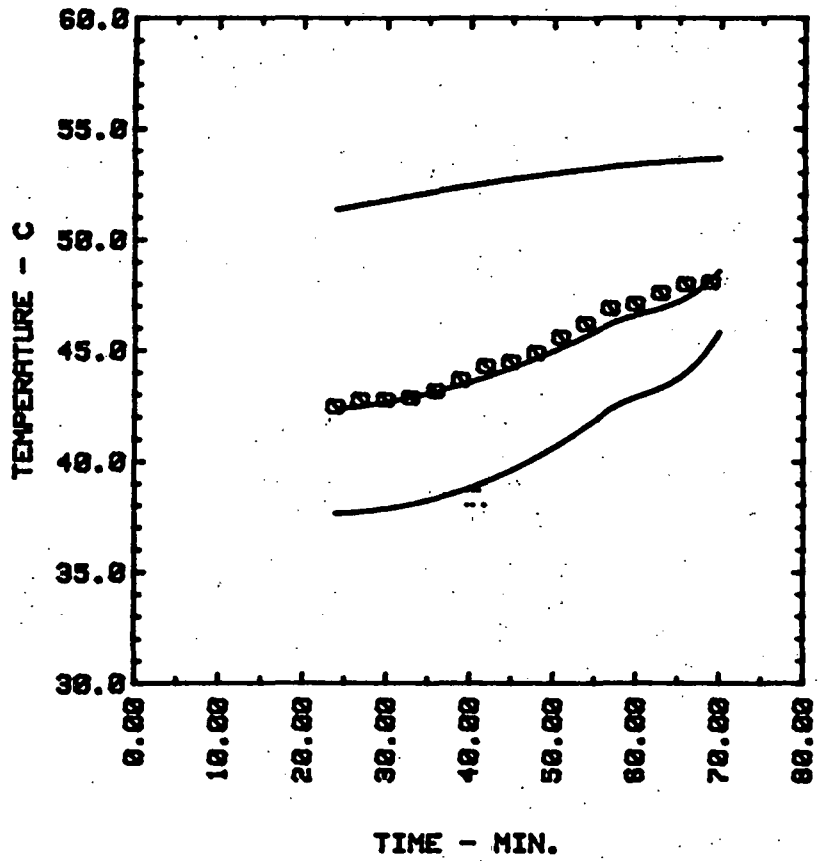

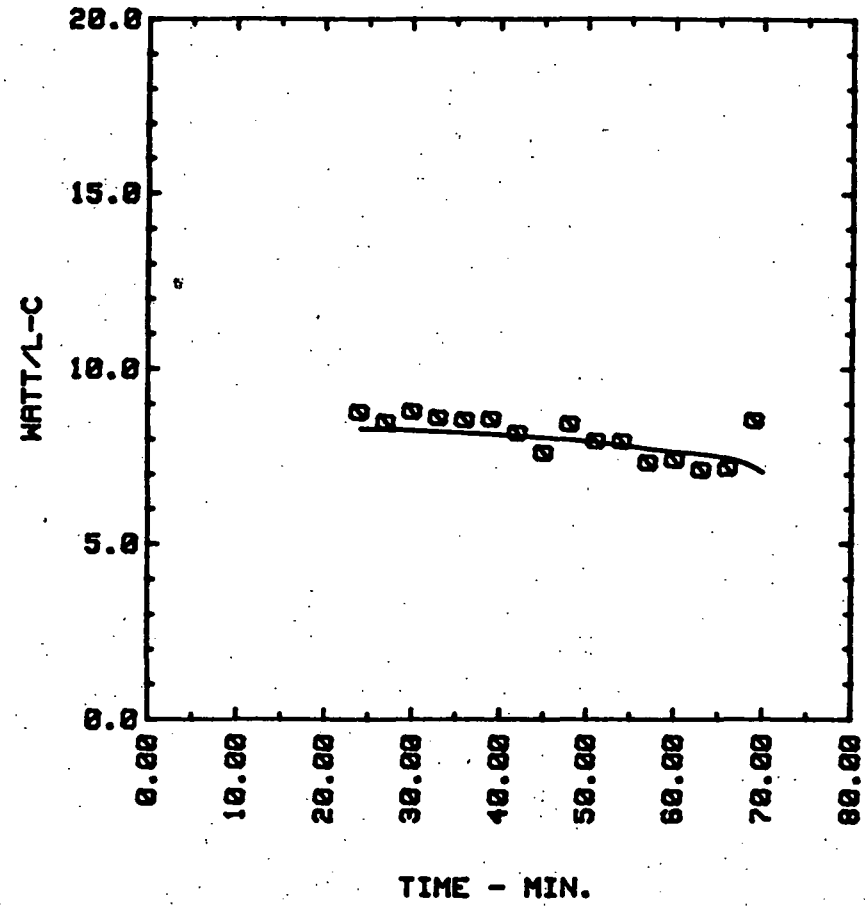

Prediction of Direct Contact System Performance Based on Models for Drop Formation, Holdup, and Heat Transfer

Latent Heat Storage Research

Activities

- Low Termperature Single Drop Formation and Heat Transfer Experiments
- Low Temperature Multi-Drop Formation and Heat Transfer Experiments
- Single Drop Heat Transfer Analysis
- Complete System Heat Transfer Analysis
- High Temperature Materials Evaluation
- High Temperature Single Drop Heat Transfer Experiments
- High Temperature Multi-Drop Heat Transfer Experiments
- Modify Analyses for High Temperature Systems

Planned FY81 Advanced Technology Activities:

- Systems Analysis of Thermal Storage for Solar Thermal Applications
- Direct Contact Storage
- Active Heat Exchange Storage
- Thermochemical Storage and Transport
- Very High Temperature Storage (~1500° F)
- New Concepts Definition

New Concepts Definition

Objectives

- Support research on new approaches to high temperature thermal energy storage
- Identify new storage concepts, materials, heat transfer systems
- Provide information on potential of innovative concepts

Approach

- Competitive selection of research projects on advanced storage concepts from universities and other research organizations
- High temperature concepts
- Analytical and experimental investigations
- Proof-of-concept definition

Very High Temperature Storage

Objectives

- Develop a technology base for very high temperature storage systems
- Investigate alternate approaches to very high temperature storage
- Provide data on most promising high temperature options

Approach

- Screen thermal energy storage options
- Select systems for research
- Investigate material compatibility
- Examine system performance

VALUE OF THERMAL STORAGE IN SOLAR THERMAL APPLICATIONS AND COST COMPARISONS OF THERMAL STORAGE CONCEPTS

R. J. COPELAND
M. E. KARPUK
J. L. ULLMAN

SECOND THERMAL STORAGE APPLICATIONS WORKSHOP
7 AND 8 FEBRUARY, 1980
SAN ANTONIO, TEXAS

SERI

OUTLINE

INTRODUCTION

- OBJECTIVES

VALUE OF THERMAL STORAGE

- RECOMMENDED COST GOALS FOR SOLAR THERMAL ELECTRIC PLANTS

COST COMPARISONS (BASED ON SERI IN-HOUSE DATA)

- APPROACH TO THE COST COMPARISONS
- WATER/STEAM RECEIVER REFERENCE SYSTEM
- EXAMPLE ALTERNATIVE STORAGE CONCEPT (PHASE CHANGE)
- COST AND PERFORMANCE DATA FOR STORAGE WITH WATER/STEAM RECEIVER
- RECOMMENDATIONS FOR WATER/STEAM RECEIVER SYSTEMS
- ORGANIC FLUID RECEIVER REFERENCE SYSTEM (SHENANDOAH)
- EXAMPLE ALTERNATIVE (MOLTEN SALT)
- COST AND PERFORMANCE DATA FOR STORAGE WITH ORGANIC FLUID RECEIVER
- PRELIMINARY RECOMMENDATIONS FOR ORGANIC FLUID RECEIVERS

PLANNED FY80 ACTIVITIES

INTRODUCTION

- "SERI"S SYSTEMS ANALYSIS OF THERMAL STORAGE" - SUPPORTS THE THERMAL ENERGY STORAGE FOR SOLAR THERMAL APPLICATIONS PROGRAM
  - VALUE DATA
  - TRADE-OFFS OF THERMAL STORAGE CONCEPTS
- THIS PRESENTATION
  - RESULTS TO DATE
  - PLANNED ACTIVITIES

OBJECTIVES OF THE SYSTEMS ANALYSIS

1) VALUE OF THERMAL STORAGE IN SOLAR THERMAL APPLICATIONS:

   THERMAL STORAGE COST GOALS

   - FOCUS DEVELOPMENT
   - SCREEN THERMAL STORAGE CONCEPTS
   - IDENTIFY NEW APPLICATIONS

2) EVALUATE COST AND PERFORMANCE OF THERMAL STORAGE CONCEPTS:

   IDENTIFY PROMISING THERMAL STORAGE CONCEPTS FOR DEVELOPMENT

   - PROBLEMS WITH THE NON-PROMISING CANDIDATES
   - AREAS FOR R&D

VALUE OF THERMAL STORAGE

VALUE OF THERMAL STORAGE

"THAT CONTRIBUTION TO SOLAR THERMAL SYSTEM VALUE WHICH IS DUE TO THERMAL STORAGE"

THERMAL STORAGE VALUE TERMS

$$\text{TOTAL THERMAL STORAGE VALUE } (\$/\text{KW}) = \left.\text{SOLAR THERMAL SYSTEM VALUE}\right|_{H} - \left.\text{SOLAR THERMAL SYSTEM VALUE}\right|_{H=0}$$

$$\text{AVERAGE THERMAL STORAGE VALUE } (\$/\text{KWH}) = \frac{\text{TOTAL THERMAL STORAGE VALUE}}{H}$$

RECOMMENDED
COST GOALS FOR THERMAL STORAGE IN SOLAR
THERMAL ELECTRIC PLANTS

(1976$)

QUANTITY OF STORAGE	HIGH INSOLATION (BARSTOW,CA)		MEDIUM INSOLATION (MIDLAND,TX)		LOW INSOLATION (SEATTLE,WA)	
	$/KW$_E$	$/KWH$_E$	$/KW$_E$	$/KWH$_E$	$/KW$_E$	$/KWH$_E$
BUFFER			ESTABLISHED BY OBTAINABLE COST			
DIURNAL						
3 HOURS	255	85	120	40	60	20
6 HOURS	300	50	180	30	90	15
9 HOURS	-	-	225	25	110	12

COST COMPARISONS
(RANKING)

	THERMAL STORAGE PROGRAM ELEMENT	TPS/STOR RECOMMENDATION ON CANDIDATE TECHNOLOGY	COMPLETE SRE: TECHNOLOGY READINESS	TPS DECISION TO PROCEED
1.	WATER/STEAM RECEIVER (BARSTOW RETROFIT)	FEB. 1981 ☆	NOV. 1983	NOV. 1983 ☆
2.	MOLTEN SALT RECEIVER REPOWERING/ INDUSTRIAL RETROFIT	JAN. 1980	SEP. 1981	
3.	LIQUID METAL RECEIVER (IEA RETROFIT)	FEB. 1982 ☆	NOV. 1985	NOV. 1985 ☆
4.	GAS COOLED RECEIVER (EPRI/DOE HYBRID BRAYTON RETROFIT)	FEB. 1981 ☆	NOV. 1983	NOV. 1983 ☆
5.	ORGANIC FLUID RECEIVER (SHENANDOAH RETROFIT)	FEB. 1981 ☆	APR. 1983	APR. 1983 ☆
6.	LIQUID METAL LATENT HEAT RECEIVER (SMALL COMMUNITY SYSTEMS)	FEB. 1980	NOV. 1981	

☆ SERI IS SUPPORTING THESE DECISION POINTS

APPROACH TO THE COST COMPARISONS

- SCREENING
  1) COMPARE DEVELOPER'S DATA TO COST GOALS
  2) SERI IN-HOUSE COST AND PERFORMANCE

THE FOLLOWING DATA ARE FROM THESE ANALYSES

- DETAIL COST AND PERFORMANCE DATA

  STEARNS-ROGER (A SERI SUB-CONTRACTOR), REVISES ALL CANDIDATE CONCEPTS: "CONSISTENT COST AND PERFORMANCE ASSUMPTIONS"

- RANKING
  1) SERI: THE COST/PERFORMANCE IMPACT ON UNIT ENERGY COST (BBEC)
  2) OTHER FACTORS: SAFETY, PROGRAM RESOURCES, PRIORITIES, SCHEDULE, ETC., CONSIDERED IN SELECTING CONCEPTS

WATER/STEAM RECEIVER REFERENCE SYSTEM

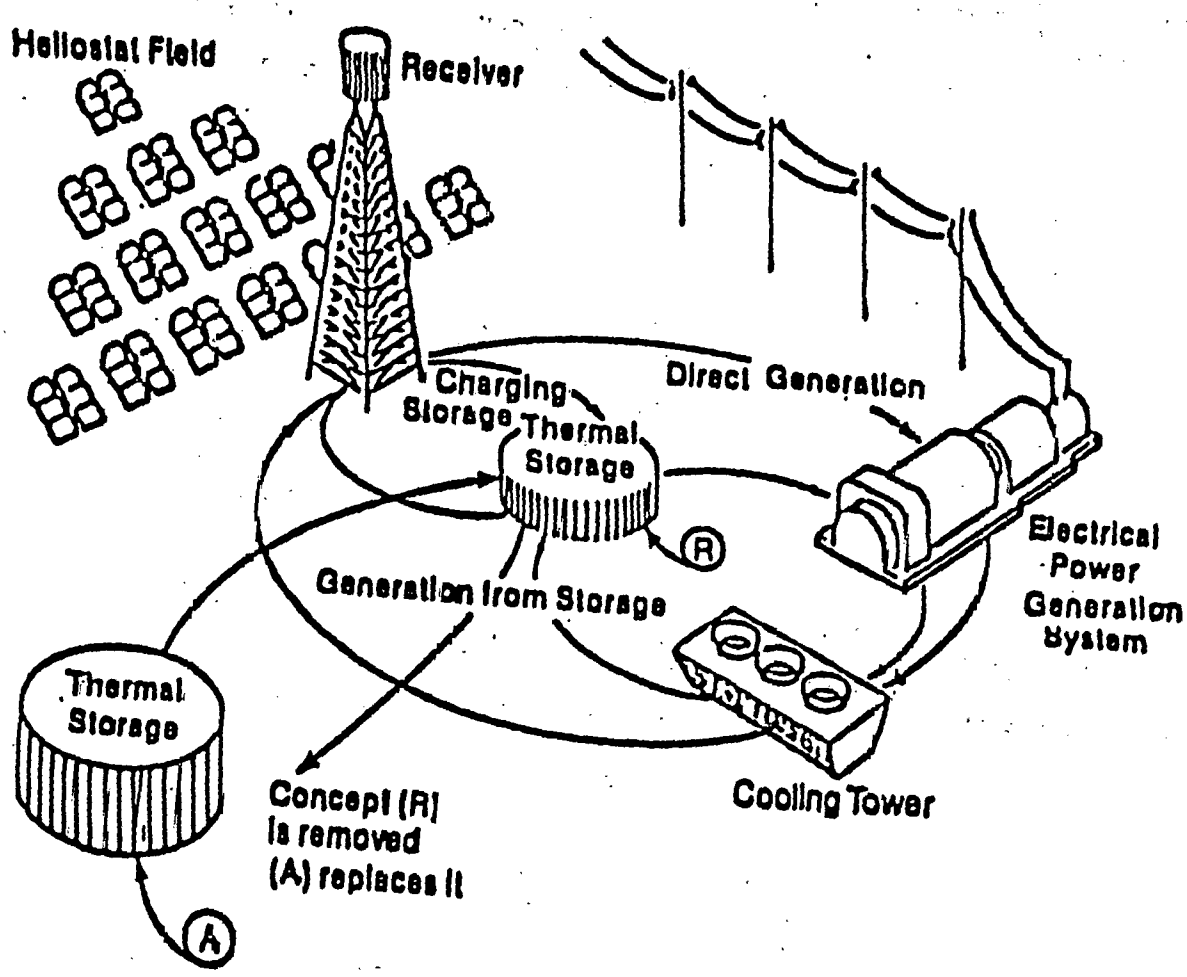

EXAMPLE ALTERNATIVE STORAGE CONCEPT

Phase Change Salt Thermal Storage System ✡
99% $NaNO_3$, 1% NaOH

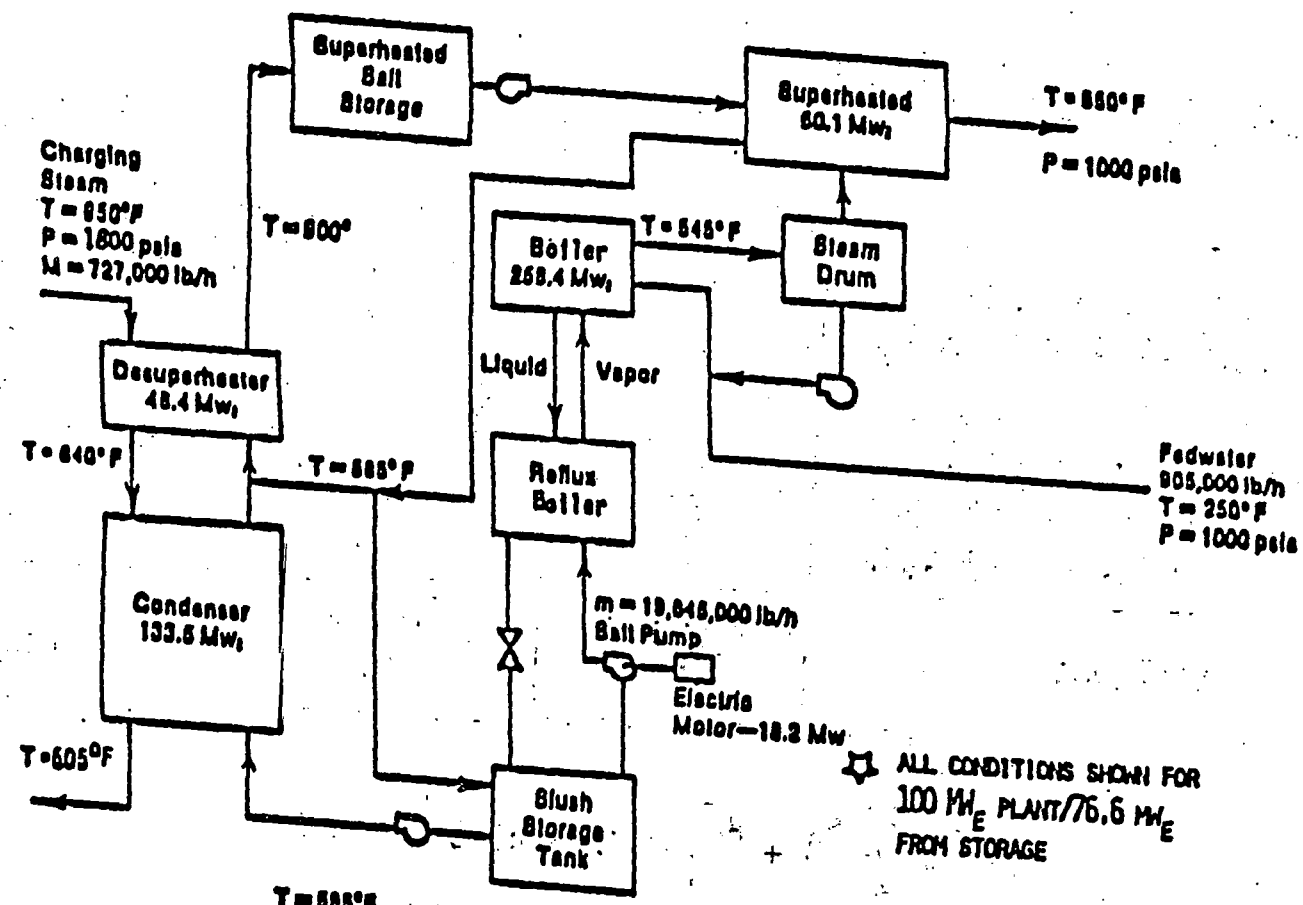

PRELIMINARY COST AND PERFORMANCE DATA
FOR STORAGE WITH WATER/STEAM RECEIVER

$$\text{TOTAL COSTS } (\$/KW_E) = \left[C_P + C_S\ H\right] F_N \quad (3)$$

CONCEPT	C_P ($\$/KW_E$)	C_S ($\$/KWH_E$)	COMMENTS
OIL/ROCK	122	14	REFERENCE SYSTEM
DRAW SALT (1)	106	57	THERMOCLINE, SALT ONLY
K-SALT/GLASS (2)	85	18	RECYCLED GLASS OR OTHER LOW COST MEDIA
TWO STAGE DRAW SALT AND K-SALT	107	52	K-SALT MELTS AT 390°F
PHASE CHANGE $NaNO_3$	116	39	AS SHOWN ON SCHEMATIC
TWO STAGE: DRAW SALT/ GLASS AND K-SALT/GLASS	107	24	
TWO STAGE: DRAW SALT/ GLASS: AND OIL/ROCK	103	17 (13)	SEVERAL MAJOR DIFFERENCES FROM CONCEPTS PROPOSED FOR BARSTOW

(1) DRAW SALT: 50% NaNO3, 50% KNO_3 - (2) K-SALT: 50% $NaNO_3$: 35% KNO_3: 15% $NaNO_2$

(3) F_N ACCOUNTS FOR LABOR AND NON-DIRECTS, BASED UPON G.E. DATA F_N = 1.95 IN THIS APPROACH (NASA CR-159411) OCTOBER 1978.

RECOMMENDATIONS FOR WATER/STEAM RECEIVER SYSTEMS

- EVALUATE FLUID COMPATIBILITIES FOR SALT MIXTURES AND LOW COST SOLID SENSIBLE HEAT MEDIA (10 TO 20 $/TON, DELIVERED)
  - ROCKS
  - RECYCLED GLASS
  - SLAG FROM COAL FIRED UNITS OR STEEL MILLS, ETC.
- CONTINUE DEVELOPMENT OF OIL/ROCK SYSTEMS
- DIRECT R&D ON LATENT HEAT SYSTEMS TOWARD IMPROVING CURRENT DESIGN
  - IMPROVE POWER RELATED COSTS WHILE SIMULTANEOUSLY REDUCING PARASITIC POWER
  - ASSESS THE POTENTIAL TO REDUCE THE STORAGE MEDIA COSTS

ORGANIC FLUID RECEIVER REFERENCE SYSTEM
(SHENANDOAH)

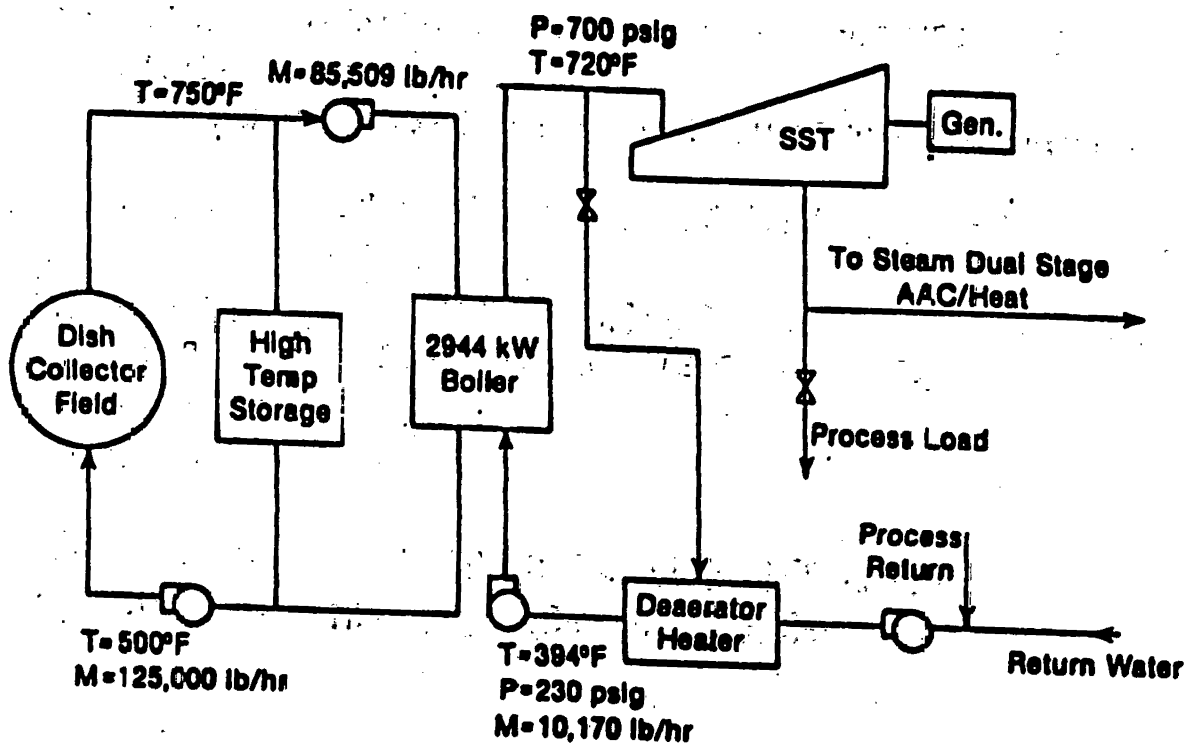

EXAMPLE ALTERNATIVE
MOLTEN SALT STORAGE

for Shenandoah Total Energy System

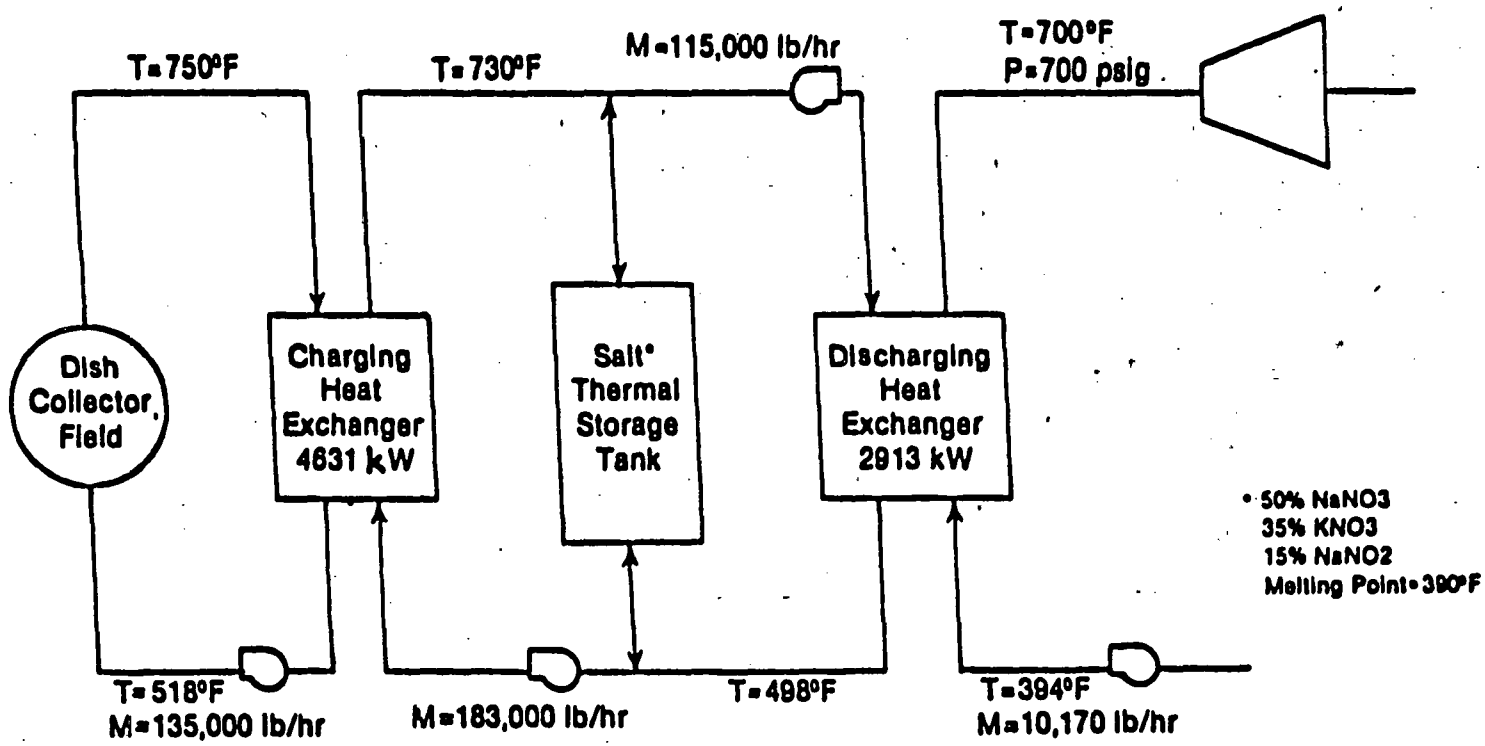

COST AND PERFORMANCE DATA FOR STORAGE WITH ORGANIC FLUID RECEIVER

CONCEPT	C_P $\$/KW_T$	C_S $\$/KWH_T$	COMMENTS
TRICKLE CHARGE SYLTHERM TACONITE	57	18	REFERENCE SYSTEM
TRICKLE CHARGE SYLTHERM/GLASS	57	12	MEDIA CHANGE ONLY, RECYCLED GLASS
PHASE CHANGE NaOH	88	19	HALF OF POWER OUTPUT OF PLANT REQUIRED FOR SLUSH PUMP
MOLTEN SALT (K-SALT)	177	10	SALT ONLY, MINOR EFFICIENCY CHANGE, THERMOLINE
K-SALT/GLASS	177	6	DUAL MEDIA, THERMOCLINE, MINOR EFFICIENCY CHANGE

PRELIMINARY RECOMMENDATIONS FOR ORGANIC FLUID RECEIVER SYSTEMS

- TACONITE IS EXPENSIVE, CONDUCT R&D ON FLUID CAPABILITIES FOR SYLTHERM AND LOWER COST SOLID SENSIBLE HEAT MEDIA (RECYCLED GLASS)
- MOLTEN SALT SYSTEMS HAVE LOW ENERGY RELATED COSTS AND HIGH POWER RELATED COSTS; DEVELOPMENT AND ADDITIONAL SYSTEM DESIGN WORK ARE RECOMMENDED.
- LATENT HEAT SYSTEMS AS CURRENTLY CONFIGURED NEED CONSIDERABLE IMPROVEMENT IN:
  - POWER RELATED COSTS
  - PARASITIC POWER
  - STORAGE MEDIA COST