390
9/29/80
A-1793

SERI/TR-351-461

August 1980

MASTER

Final Report: A Comparative Ranking of of 0.1-10 MW_e Solar Thermal Electric Power Systems

Volume 1
Summary of Results

John P. Thornton
Kenneth C. Brown
Joseph G. Finegold
James B. Gresham
F. Ann Herlevich
John S. Kowalik
Thomas A. Kriz

SERI

Solar Energy Research Institute
A Division of Midwest Research Institute

1617 Cole Boulevard
Golden, Colorado 80401

Operated for the
U.S. Department of Energy
under Contract No. EG-77-C-01-4042

DISTRIBUTION OF THIS DOCUMENT IS UNLIMITED

DISCLAIMER

This report was prepared as an account of work sponsored by an agency of the United States Government. Neither the United States Government nor any agency Thereof, nor any of their employees, makes any warranty, express or implied, or assumes any legal liability or responsibility for the accuracy, completeness, or usefulness of any information, apparatus, product, or process disclosed, or represents that its use would not infringe privately owned rights. Reference herein to any specific commercial product, process, or service by trade name, trademark, manufacturer, or otherwise does not necessarily constitute or imply its endorsement, recommendation, or favoring by the United States Government or any agency thereof. The views and opinions of authors expressed herein do not necessarily state or reflect those of the United States Government or any agency thereof.

DISCLAIMER

Portions of this document may be illegible in electronic image products. Images are produced from the best available original document.

Printed in the United States of America
Available from:
National Technical Information Service
U.S. Department of Commerce
5285 Port Royal Road
Springfield, VA 22161
Price:
Microfiche $3.00
Printed Copy $ 8.00

NOTICE

This report was prepared as an account of work sponsored by the United States Government. Neither the United States nor the United States Department of Energy, nor any of their employees, nor any of their contractors, subcontractors, or their employees, makes any warranty, express or implied, or assumes any legal liability or responsibility for the accuracy, completeness or usefulness of any information, apparatus, product or process disclosed, or represents that its use would not infringe privately owned rights.

SERI/TR-351-461
UC CATEGORIES: UC-62b,62d,62e

M8005578A
M8005573A

FINAL REPORT: A COMPARATIVE RANKING OF 0.1-10 MW_e SOLAR THERMAL ELECTRIC POWER SYSTEMS

VOLUME I
SUMMARY OF RESULTS

JOHN P. THORNTON
KENNETH C. BROWN
JOSEPH G. FINEGOLD
JAMES B. GRESHAM
F. ANN HERLEVICH
JOHN S. KOWALIK
THOMAS A. KRIZ

AUGUST 1980

PREPARED UNDER TASK NO. 3456.10

Solar Energy Research Institute
A Division of Midwest Research Institute

1617 Cole Boulevard
Golden, Colorado 80401

Prepared for the
U.S. Department of Energy
Contract No. EG-77-C-01-4042

DISCLAIMER

This book was prepared as an account of work sponsored by an agency of the United States Government. Neither the United States Government nor any agency thereof, nor any of their employees, makes any warranty, express or implied, or assumes any legal liability or responsibility for the accuracy, completeness, or usefulness of any information, apparatus, product, or process disclosed, or represents that its use would not infringe privately owned rights. Reference herein to any specific commercial product, process, or service by trade name, trademark, manufacturer, or otherwise, does not necessarily constitute or imply its endorsement, recommendation, or favoring by the United States Government or any agency thereof. The views and opinions of authors expressed herein do not necessarily state or reflect those of the United States Government or any agency thereof.

DISTRIBUTION OF THIS DOCUMENT IS UNLIMITED

THIS PAGE

WAS INTENTIONALLY

LEFT BLANK

PREFACE

This report documents work done on SERI Tasks 3509 and 3526 by members of the Systems Development Branch of the Utilities and Industry Division. The task extended from April 1978 through September 1979 and was supported by the Division of Solar Thermal Energy Systems, Office of Solar Industrial Applications of the U.S. Department of Energy.

The authors want to thank Stephen Cronin, Louise Morrison, Doug Madison, and Marshall Buhl for their invaluable assistance in developing BALDR, the system simulation computer code. Many other people within SERI who helped to gather data, conduct site visits, and participate in design reviews are acknowledged in Appendices F and G.

John Thornton, Task Leader
Systems Development Branch

Approved for

SOLAR ENERGY RESEARCH INSTITUTE

Charles Bishop, Branch Chief
Systems Development Branch

Neil H. Woodley, Manager
Utilities and Industry Division

THIS PAGE

WAS INTENTIONALLY

LEFT BLANK

SUMMARY

The Division of Solar Thermal Energy Systems, Office of Solar Industrial Applications of the U.S. Department of Energy (DOE) initiated the Small Solar Thermal Power System Program to explore the technical, economic, and institutional feasibility of providing remote load centers, small communities, rural areas, and industrial users with supplementary energy sources. The objective of the Small Solar Thermal Power System Program is to establish the technical readiness of cost-competitive solar thermal power systems. A Small Communities Application project supports the program. The U.S. Department of Energy delegated responsibility for both technical management of the small communities project and for development of experimental systems that achieve the objectives of the program to the Jet Propulsion Laboratory in Pasadena, California.

To identify the most likely options for long-term commercialization of small solar thermal electric power systems, DOE requested a comparative analysis of the major generic solar thermal electric systems. The Small Solar Thermal Electric Power Systems Study (SPSS) began in April 1978 at both the Solar Energy Research Institute and Battelle Pacific Northwest Laboratories.

The original objective of the study was to project the mid-1990 cost and performance of selected generic solar thermal electric power systems for utility applications and to rank these systems by criteria that reflected their future commercial acceptance. This study considered plants with rated capacities of 1 MW_e to 10 MW_e, operating over a range of capacity factors from the no-storage case to 0.7 and above. Later, the study was extended to include systems with capacities from 0.1 MW_e to 1 MW_e, a range that is attractive to industrial and other non-utility applications.

In the first phase of SPSS, completed in October 1978, generic systems and their variations and a simulation technique for projecting future cost and performance were selected, ground rules were established, and a ranking method was defined. A report summarizing the approach of the study and its selections of generic systems was released in July 1978.*

Systems from 1-10 MW_e rated capacity were examined during the second phase of SPSS, completed in May 1979. A preliminary summary of the ranking of 1-10 MW_e systems was published in September 1979.**

The third and last phase of SPSS, completed in September 1979, evaluated systems with rated capacities of 0.1-1 MW_e. Because utilities usually are not interested in systems of this capacity range, ground rules were modified and ten systems were modeled for industrial or small community use with an available backup power source such as a grid or diesel generator. Unlike the 1-10 MW_e systems, these smaller systems do not operate as an integral part of the grid.

---

*Thornton, J. et al. Small Power Systems Quarterly Report No. 1. SERI-36. Golden, CO: Solar Energy Research Institute; 1 July 1978.

**Thornton, J. et al. Comparative Ranking of 1-10 MW_e Solar Thermal Electric Power Systems. SERI/TR-35-238. Golden, CO: Solar Energy Research Institute; Sept. 1979.

Volume I of this report summarizes the results for both the 1-10 MW_e and 0.1-1 MW_e capacity studies. The second volume contains tabularized system performance summaries, ranking methodology data, and a complete set of key references. Both volumes are available from the National Technical Information Service.

TABLE OF CONTENTS

		Page
1.0	Results, Conclusions, and Recommendations	1
1.1	The Comparative Ranking of 1-10 MW_e Systems for Utility Applications	1
1.2	The Comparative Ranking of 0.1-1 MW_e Systems for Industrial Applications	3
1.3	Sensitivity Studies	4
1.4	Near-Term Readiness of Generic Systems	5
1.5	Conclusions and Recommendations	6
2.0	Study Overview	9
2.1	Significance and Scope of the Study	9
2.2	Approach	10
2.2.1	Selection of Generic System Options	10
2.2.2	System Conceptualization and Characterization	10
3.0	Results of 1-10 MW_e System Evaluation	13
3.1	Descriptions of Generic Systems	13
3.1.1	Point-Focus Central Receiver/Rankine System	13
3.1.2	Point-Focus Central Receiver/Brayton System	13
3.1.3	Point-Focus Distributed Receiver/Stirling System	18
3.1.4	Point-Focus Distributed Receiver/Brayton System	18
3.1.5	Point-Focus Distributed Receiver/Central Rankine System	18
3.1.6	Low Concentration Nontracking System	22
3.1.7	Line-Focus Distributed Receiver—Tracking Collector System	22
3.1.8	Line-Focus Distributed Receiver—Tracking Receiver System	22
3.1.9	Line-Focus Central Receiver System	25
3.1.10	Fixed Mirror Distributed Focus System	25
3.1.11	Shallow Solar Pond System	30
3.2	Technical and Economic Evaluation of 1-10 MW_e Systems	30
3.2.1	Results of Economic Analysis	30
3.2.2	Sensitivity Analyses	38
3.2.3	The Effects of Inflation	40
3.3	Summary of MADA Ranking Results (1-10 MW_e Systems)	42
3.3.1	Conclusions of the Decision Analysis	44
3.3.2	Participating Decision Makers	44
3.3.3	System Rankings	46
3.3.4	Sensitivity Analysis	50
4.0	Results of 0.1-1 MW_e System Evaluation	55
4.1	Descriptions of Generic Systems	55
4.1.1	Point-Focus Central Receiver/Rankine System	55
4.1.2	Point-Focus Central Receiver/Brayton System	60
4.1.3	Point-Focus Central Receiver/Stirling System	60
4.1.4	Point-Focus Distributed Receiver/Stirling System	60
4.1.5	Point-Focus Distributed Receiver/Brayton System	60

TABLE OF CONTENTS (continued)

Page

4.1.6 Point-Focus Distributed Receiver/Rankine System 60
4.1.7 Point-Focus Distributed Receiver/Central Rankine System 63
4.1.8 Fixed Mirror Distributed Focus System 63
4.1.9 Line Focus Distributed Receiver—Tracking Collector System 63
4.1.10 Low Concentration Nontracking System 63
4.2 Technical and Economic Evaluation of 0.1-1 MW_e Systems 63
4.2.1 Results of Economic Analysis 63
4.2.2 Sensitivity Analyses 73
4.3 Summary of MADA Ranking Results (0.1-1 MW_e) 79
4.3.1 Conclusions of the Decision Analyses 79
4.3.2 Problem Structure and Participating Decision Makers 82
4.3.3 System Rankings 82
4.3.4 Sensitivity Analysis 89

5.0 Comparison of 1-10 MW_e and 0.1-1 MW_e Rankings 93
5.1 Comparison of Busbar Energy Costs 93
5.2 Comparison of MADA Ranking Results 93
5.2.1 Conclusions 95
5.2.2 Differences in Attribute Selection 95
5.2.3 Overall MADA Rankings 95
5.2.4 Comparison of Ranking by System Size 95

6.0 References 99

Appendix A - System Cost and Performance Summaries A-1
A.1 Baseline Cost Assumptions A-1
A.2 Cost and Performance Summaries A-1
A.2.1 Generic System A-2
A.2.2 Performance Factors A-2
A.2.3 Cost Factors A-2
A.2.4 Resultant Costs A-3
A.2.5 Actual Capacity Factor A-3
A.3 Cost Sensitivity Studies A-3

Appendix B - Cost and Performance Simulation B-1
B.1 FIELD Code B-1
B.2 POWER Code B-1
B.3 ECON Code B-3
B.4 References B-3

Appendix C - A Ranking Method Using Multiattribute Decision Analysis C-1
C.1 Multiattribute Decision Analysis C-1
C.2 References C-3

Appendix D - Problem Structure D-1
D.1 Objective of the Study D-1

TABLE OF CONTENTS (concluded)

Page

D.2 Criteria and Attributes D-1
D.3 Difference in Problem Structure (1-10 MW_e versus 0.1-1 MW_e) D-3
D.4 References D-7

Appendix E - Profiles of Decision Makers E-1
E.1 Decision Makers in 1-10 MW_e Study E-1
E.1.1 Quantitative Results E-1
E.1.2 Qualitative Results E-2
E.2 Decision Makers in the 0.1-1 MW_e Study E-5
E.2.1 Identification of Decision Makers/Typical Uses E-6
E.2.2 Quantitative Results E-7
E.2.3 Qualitative Results E-8

Appendix F - Study Participants F-1

Appendix G - Individuals and Organizations Inverviewed for Multiattribute Decision Analysis G-1
G.1 Electric Utilities or Utility Industry Representatives (1-10 MW_e Study) G-1
G.2 Industrial and Small Community Representatives (0.1-1 MW_e Study) G-1

Appendix H - Sources of Information H-1

THIS PAGE

WAS INTENTIONALLY

LEFT BLANK

LIST OF FIGURES

		Page
3-1	Generic Options Considered in the 1-10 MW_e Ranking	15
3-2	Point-Focus Central Receiver/Rankine (PFCR/R) System Flow Schematic Drawing	16
3-3	Two-Axis Tracking Heliostat	16
3-4	Point-Focus Central Receiver (PFCR)	17
3-5	Point-Focus Central Receiver/Brayton (PFCR/B) System Flow Schematic Drawing	17
3-6	Point-Focus Distributed Receiver/Stirling (PFDR/S) System Flow Schematic Drawing	19
3-7	Point-Focus Distributed Receiver (PFDR) Dish	20
3-8	Point-Focus Distributed Receiver/Brayton (PFDR/B) System Flow Schematic Drawing	20
3-9	Point-Focus Distributed Receiver/Central Rankine (PFDR/CR) System Flow Schematic Drawing	21
3-10	Low Concentration Nontracking (LCNT) System Flow Schematic Drawing	23
3-11	Low Concentration Nontracking (LCNT) Collector Module	23
3-12	Line-Focus Distributed Receiver-Tracking Collector (LFDR-TC) System Flow Schematic Drawing	24
3-13	Line-Focus Distributed Receiver-Tracking Collector (LFDR-TC)	24
3-14	Line-Focus Distributed Receiver-Tracking Receiver (LFDR-TR) System Flow Schematic Drawing	26
3-15	Line-Focus Distributed Receiver-Tracking Receiver (LFDR-TR)	26
3-16	Line-Focus Central Receiver (LFCR) System Flow Schematic Drawing	27
3-17	One-Axis Tracking Heliostat	27
3-18	Line-Focus Central Receiver System (LFCR)	28
3-19	Fixed Mirror Distributed Focus (FMDF) System Flow Schematic Drawing	29
3-20	Fixed Mirror Distributed Focus (FMDF) Bowl	29
3-21	Shallow Solar Pond (SSP) System Flow Schematic Drawing	31
3-22	Shallow Solar Pond (SSP)	31
3-23	Breakdown of $\overline{BBEC}$ into Financing Components	33
3-24	Cost of Energy (mills/kWh) as a Function of Capacity and Capacity Factor for PFDR/R, PFDR/B, and PFDR/S Systems	36
3-25	Cost of Energy (mills/kWh) as a Function of Capacity for PFDR/CR and PFDR/S Systems	37
3-26	Difference Between Levelized Energy Costs in Nominal and Real Dollar Terms (Baseline Economic Scenario)	41
3-27	Selected Problem Structure	43
3-28	Relative System Preference Scores (Group A)	48
3-29	Effects of System Uncertainty on Rankings (1-10 MW_e Systems)	52
4-1	Generic Options in the 0.1-1.0 MW_e Ranking	56
4-2	Point-Focus Central Receiver/Rankine (PFCR/R) 0.1 MW_e and 0.3 MW_e System Flow Schematic Drawing	58
4-3	Point-Focus Central Receiver/Brayton (PFCR/B) System Flow Schematic Drawing	59

LIST OF FIGURES (concluded)

		Page
4-4	Point-Focus Central Receiver/Stirling (PFCR/S) System Flow Schematic Drawing	61
4-5	Point-Focus Distributed Receiver/Rankine (PFDR/R) System Flow Schematic Drawing	62
4-6	Point-Focus Distributed Receiver/Central Rankine (PFDR/CR) 0.1 MW_e and 0.3 MW_e System Flow Schematic Drawing	64
4-7	Fixed Mirror Distributed Focus (FMDF) 0.1 MW_e and 0.3 MW_e System Flow Schematic Drawing	65
4-8	Line-Focus Distributed Receiver-Tracking Collector (LFDR-TC) System Flow Schematic Drawing	66
4-9	Low Concentration Nontracking (LCNT) System Flow Schematic Drawing	67
4-10	Breakdown of $\overline{BBEC}$ into Financing Components	71
4-11	Levelized Busbar Energy Costs as a Function of Capacity Factor, 0.3 MW_e Parabolic Dish Systems	71
4-12	Levelized Busbar Energy Costs as a Function of Capacity for Parabolic Dish Systems, Best Capacity Factors	75
4-13	Effect of Dish Diameter on Levelized Annual Energy Costs (PFDR/S, 1 MW_e)	76
4-14	Levelized Annual Energy Costs as a Function of Capacity Factor for PFCR Systems (0.3 MW_e)	76
4-15	Levelized Annual Energy Costs as a Function of Capacity for PFCR Systems (Optimum Capacity Factors)	78
4-16	Variation of Simple Payback Period as a Function of Cost of Energy from Alternate Sources (PFDR/S, 0.3 MW_e, 0.3 CF)	80
4-17	Problem Structure (0.1-1 MW_e Evaluation)	83
4-18	Relative System Preference Scores	85
4-19	Effects of System Uncertainty on Rankings (0.1-1 MW_e Systems)	90
5-1	Comparison of Busbar Energy Costs for a Capacity Range of 0.1-10 MW_e for the PFDR/S and PFCR/R Systems (0.7 CF)	94
5-2	Attribute Comparison (Weights Normalized to 1.0)	96
B-1	Simplified Flow Chart for BALDR-1 Performance and Cost Simulation Codes	B-2
D-1	Problem Hierarchy for Multiattribute Decision Analysis	D-2
D-2	Comparison of Subobjectives and Criteria Between 0.1-1.0 MW_e and 1-10 MW_e Studies	D-6
E-1	Preference Functions (1-10 MW_e Systems)	E-3,E-4
E-2	Preference Functions (0.1-1 MW_e Systems)	E-8

LIST OF TABLES

		Page
1-1	Comparative Ranking of 1-10 MW_e Systems for Utility Applications	2
1-2	Comparative Ranking of 0.1-1 MW_e Systems for Industrial Applications	3
1-3	Present Relative Commercial Readiness of 1-10 MW_e Generic Systems for Utility Use	6
1-4	Present Relative Commercial Readiness of 0.1-1 MW_e Generic Systems for Industrial Use	7
2-1	Generic Systems Considered in the Comparative Ranking of 0.1-10 MW_e Solar Thermal Power Systems	11
2-2	Cost Factors Used in 0.1-10 MW_e Systems Evaluation	12
3-1	Combination of Technologies Considered in 1-10 MW_e System Evaluation	14
3-2	Projected $\overline{BBEC}$ of 1-10 MW_e Solar Thermal Electric Systems (mills/kWh)	32
3-3	Variation in $\overline{BBEC}$ Ranking of 1-10 MW_e Systems with Capacity	34
3-4	Projected Capital Cost of 1-10 MW_e Utility Systems ($/$kW_e$)	35
3-5	Economic Scenarios used in 1-10 MW_e Sensitivity Analysis (PFDR/S, 10 MW_e, 0.25 CF) System	39
3-6	Results of Sensitivity Analyses for PFDR/S System (5 MW_e 0.4 Capacity Factor)	40
3-7	Results of Sensitivity Analyses for PFCR/R System (5 MW_e 0.4 Capacity Factor)	40
3-8	Composition of Decision Groups	45
3-9	Best Overall Option System Rankings	47
3-10	Final Overall Ranking of 1-10 MW_e Systems for Utility Applications	49
3-11	Highest Rated System Variations	49
3-12	Ranking of Systems by Capacity	51
3-13	Assigned Value Uncertainties for 1-10 MW_e Systems	51
3-14	Variation of Attribute Weights	53
3-15	Effect on Ranking of Variations in Attribute Weights	53
4-1	Combination of Technologies Considered in 0.1-1 MW_e Systems Evaluation	57
4-2	Projected $\overline{BBEC}$ of 0.1 MW_e Solar Thermal Electric Systems (mills/kWh)	68
4-3	Projected $\overline{BBEC}$ of 0.3 MW_e Solar Thermal Electric Systems (mills/kWh)	68
4-4	Projected $\overline{BBEC}$ of 1 MW_e Solar Thermal Electric Systems (mills/kWh)	69
4-5	Variation in $\overline{BBEC}$ Ranking of 0.1-1 MW_e Systems with Capacity	69
4-6	Capital Cost of 0.1 MW_e Industrial Systems ($/$kW_e$)	72
4-7	Capital Cost of 0.3 MW_e Industrial Systems ($/$kW_e$)	72
4-8	Capital Cost of 1 MW_e Industrial Systems ($/$kW_e$)	73
4-9	Typical Simple Payback Periods for 0.1-1 MW_e Industrial Systems (0.3 MW_e, Best Capacity Factor)	73

LIST OF TABLES (continued)

		Page
4-10	Economic Scenarios Used in 0.1-1 MW_e Sensitivity Analysis	81
4-11	Final Overall Ranking of 0.1-1 MW_e Systems for Industrial Applications	84
4-12	Highest Rated System Variations	86
4-13	Rankings by User Category	86
4-14	Overall Ranking by System Capacity	87
4-15	Sample User Constraints	88
4-16	User Category Rankings Incorporating User Constraints	88
4-17	Assigned Value Uncertainty Ranges for 0.1-1 MW_e Systems	91
4-18	Variation of Attribute Weights	91
4-19	Effect on Rankings of Variation in Attribute Weights	92
5-1	Comparison of 1-10 MW_e and 0.1-1 MW_e Rankings	97
5-2	Ranking As a Function of System Capacity	97
A-1	System Nomenclature	A-4
A-2	Cost and Performance Summary for 1 MW_e Utility Systems (No Storage)	A-5
A-3	Cost and Performance Summary for 1 MW_e Utility Systems (Nominal CF = 0.4)	A-5
A-4	Cost and Performance Summary for 1 MW_e Utility Systems (Nominal CF = 0.7)	A-6
A-5	Cost and Performance Summary for 1 MW_e Utility Systems (Nominal CF = OPT)	A-6
A-6	Cost and Performance Summary for 5 MW_e Utility Systems (No Storage)	A-7
A-7	Cost and Performance Summary for 5 MW_e Utility Systems (Nominal CF = 0.4)	A-7
A-8	Cost and Performance Summary for 5 MW_e Utility Systems (Nominal CF = 0.7)	A-8
A-9	Cost and Performance Summary for 5 MW_e Utility Systems (Nominal CF = OPT)	A-8
A-10	Cost and Performance Summary for 10 MW_e Utility Systems (No Storage)	A-9
A-11	Cost and Performance Summary for 10 MW_e Utility Systems (Nominal CF = 0.4)	A-9
A-12	Cost and Performance Summary for 10 MW_e Utility Systems (Nominal CF = 0.7)	A-10
A-13	Cost and Performance Summary for 10 MW_e Utility Systems (Nominal CF = OPT)	A-10
A-14	Cost and Performance Summary for 0.1 MW_e Industrial Systems (Nominal CF = 0.3)	A-11
A-15	Cost and Performance Summary for 0.1 MW_e Industrial Systems (Nominal CF = 0.4)	A-11
A-16	Cost and Performance Summary for 0.1 MW_e Industrial Systems (Nominal CF = 0.5)	A-12
A-17	Cost and Performance Summary for 0.1 MW_e Industrial Systems (Nominal CF = 0.6)	A-12

LIST OF TABLES (concluded)

Page

A-18 Cost and Performance Summary for 0.1 MW_e Industrial Systems (Nominal CF = 0.7) A-13
A-19 Cost and Performance Summary for 0.1 MW_e Industrial Systems (Nominal CF = 0.8) A-13
A-20 Cost and Performance Summary for 0.3 MW_e Industrial Systems (Nominal CF = 0.3) A-14
A-21 Cost and Performance Summary for 0.3 MW_e Industrial Systems (Nominal CF = 0.4) A-14
A-22 Cost and Performance Summary for 0.3 MW_e Industrial Systems (Nominal CF = 0.5) A-15
A-23 Cost and Performance Summary for 0.3 MW_e Industrial Systems (Nominal CF = 0.6) A-15
A-24 Cost and Performance Summary for 0.3 MW_e Industrial Systems (Nominal CF = 0.7) A-16
A-25 Cost and Performance Summary for 0.3 MW_e Industrial Systems (Nominal CF = 0.8) A-16
A-26 Cost and Performance Summary for 1 MW_e Industrial Systems (Nominal CF = 0.3) A-17
A-27 Cost and Performance Summary for 1 MW_e Industrial Systems (Nominal CF = 0.4) A-17
A-28 Cost and Performance Summary for 1 MW_e Industrial Systems (Nominal CF = 0.5) A-18
A-29 Cost and Performance Summary for 1 MW_e Industrial Systems (Nominal CF = 0.6) A-18
A-30 Cost and Performance Summary for 1 MW_e Industrial Systems (Nominal CF = 0.7) A-19
A-31 Cost and Performance Summary for 1 MW_e Industrial Systems (Nominal CF = 0.8) A-19

C-1 Previous Application of Multiattribute Decision Analysis in Energy-Related Studies C-2

D-1 Definitions of Criteria and Attributes and Their Ranges (1-10 MW_e Systems) D-4
D-2 Definitions of Criteria and Attributes and Their Ranges (0.1-1 MW_e Systems) D-5

E-1 Reference Attribute Choice (1-10 MW_e Systems) E-2
E-2 Relative Attribute Weights (Normalized to 1.0) (1-10 MW_e Systems) E-2
E-3 Reference Attribute Choice and Relative Attribute Weighting (0.1-1 MW_e Systems) E-7

THIS PAGE

WAS INTENTIONALLY

LEFT BLANK

NOMENCLATURE AND DEFINITIONS

AC: Collector field size.

Battelle PNL: Battelle Pacific Northwest Laboratories.

BBEC: See "Levelized Busbar Energy Cost."

Capacity: The nameplate rating of the plant. In most systems in this study this corresponds to the nameplate rating on the generator minus auxiliary load requirements.

Capacity factor (CF): The ratio of the total energy actually produced on an annual basis to the total energy possible from the plant if operated continuously at rated capacity for a full year. In a solar power plant, increased capacity factor is achieved with increased thermal or electric storage or the addition of more collector area.

Collector: In this study, includes both concentrator and receiver.

Concentrator: Refers only to the solar energy concentrating device exclusive of the receiver, e.g., a heliostat.

Continuous flow mode: Operation of a system with continuously circulating fluid as opposed to batch mode.

CPC: Compound parabolic collector, sometimes called a Winston collector.

Draw salt: A commercial heat transfer salt composed of 55% potassium nitrate and 45% sodium nitrate.

Dowtherm A: A commercial organic heat transfer fluid composed of a eutectic mixture of biphenyl and biphenyl oxide.

ECF: Energy collected from the field of collectors.

FMDF: Fixed-mirror distributed focus collector; a fixed hemispherical bowl with a two-axis tracking linear receiver.

Generic system: A typical system representative of systems employing a specific technology.

Grid-connected: Connected to the utility's distribution system. All of the 1-10 MW_e plants were assumed to be grid-connected in this study.

Heliostat: A sun-tracking reflector used for focusing the insolation on a central receiver.

Hitec salt: A commercial heat transfer salt composed of 53% potassium nitrate, 40% sodium nitrite, and 7% sodium nitrate.

Internal rate of return: The average interest rate that can be obtained by the utility on investments within the company.

IPH: Industrial process heat.

JPL: Jet Propulsion Laboratory.

LCNT: Low concentration nontracking collector, such as a CPC.

Levelized busbar energy cost ($\overline{BBEC}$): The price per unit of energy produced that, if obtained throughout the life of the plant, would provide total operating revenue sufficient to repay all operating expenses, amortize capital investment, and provide an adequate return to investors and bond-holders.

LFCR: Line-focus central receiver system, composed of one-axis tracking heliostats and a tower-mounted linear receiver.

LFDR-TC: Line-focus distributed receiver, wherein the entire collector tracks, such as a conventional parabolic trough collector.

LFDR-TR: Line-focus distributed receiver, wherein only the receiver tracks. Examples built now have segmented concentrators.

MADA: Multiattribute decision analysis.

PFCR: Point-focus central receiver system, composed of two-axis tracking heliostats and a tower-mounted receiver.

PFCR/B: Point-focus central receiver with Brayton power conversion.

PFCR/R: Point-focus central receiver with Rankine-cycle power conversion.

PFCR/S: Point-focus central receiver with central Stirling-cycle power conversion.

PFDR: Point-focus distributed receiver, such as a two-axis tracking paraboloidal dish with a receiver mounted at the dish focus. A heat engine or a heat exchanger can be mounted at the receiver to use the collected heat.

PFDR/CR: Parabolic dish collectors with central Rankine power conversion.

PFDR/B: Parabolic dish collectors with distributed Brayton engines mounted at the focal points.

PFDR/R: Parabolic dish collectors with a Rankine-cycle turbine at each focal point.

PFDR/S: Parabolic dish collectors with distributed Stirling engines mounted at each focal point.

Redox battery: Electrical storage battery in which one or two pairs of liquid electrolytes produce electricity in a reactor: one fluid is oxidized while another is reduced. The electrolytes are stored in tanks separate from the reactor.

Second-order simulation: A computer simulation in which the system components and processes are modeled based on empirical relationships as opposed to a first-order simulation in which the system as a whole is modeled based on empirical relationships,

and a third-order simulation in which the system components and processes are modeled based upon the presumed actual forces of nature that control them.

Selective surface: A surface whose effective emissivity and absorptivity are different because it has different optical properties at different light wavelengths. For solar applications, the selective surface is highly absorbant of the solar spectrum, and has low emittance in the infrared region.

Sensible heat storage: Thermal storage wherein an increase in heat stored results in a rise in temperature of the storage medium, as opposed to latent heat storage wherein heat is absorbed by a phase change.

Simple Payback Period: Time required to recover capital investment through savings in operating costs. Simple payback, although including tax credits, ignores inflation and income tax.

SPSS: Small Solar Thermal Electric Power Systems Study.

STE: Electrical energy storage size.

ST: Thermal energy storage size.

SSP: Shallow solar pond; a saltless solar pond wherein thermal storage is provided exterior to the pond itself.

Thermocline storage: A thermal storage system wherein the hot medium is separated from the cold medium by a relatively sharp temperature gradient. This gradient rises and falls in the storage tank(s) as heat is added to and withdrawn from storage.

USES: Utility-Owned Solar Electric Systems.

Blank

SECTION 1.0

RESULTS, CONCLUSIONS, AND RECOMMENDATIONS

The objective of the SPSS was to determine what solar thermal technologies have the greatest mid-1990 potential for small electric utility and industrial applications in the 0.1 to 10 MW_e capacity range. This section presents conclusions of the study and recommends the development of systems that show the greatest potential.

The ranking or selection of solar thermal technologies for power applications must be done with the active participation of representative decision makers of the various user markets. Small solar thermal electric power systems may be applied in small communities, electric utilities of many sizes, isolated facilities, military bases, industry, and agriculture, and many rural and undeveloped areas. In addition, influential nonusers with significant interests such as federal and state agencies, researchers, engineers, and public interest groups will affect the development of these systems. SERI incorporated the opinions of four groups of decision makers in the ranking: (1) the electric utility industry and its auxiliary consultants and regulators, (2) the industrial user community, (3) other potential user groups, and (4) the research and development community, both technical and nontechnical.

The results of this study are relevant only to plants used for electrical power generation in the 0.1-10 MW_e capacity ranges and are not necessarily transferable to applications such as industrial process heat (IPH) or cogeneration. SERI is studying the specific needs of potential users of IPH during FY80.

1.1 THE COMPARATIVE RANKING OF 1-10 MW_e SYSTEMS FOR UTILITY APPLICATIONS

Table 1-1 presents a comparative ranking, based upon technical, economic, social, and commerical criteria derived from the utility and R&D communities, of the eleven generic systems considered for utility applications in the 1-10 MW_e capacity range.

The systems are listed in order of preference within each group. Two system concepts (Group I) rank significantly higher than the other systems and are the most appropriate options for development. The point-focus central receiver system with Rankine-cycle power conversion (PFCR/R) represents a technology with some development history and superior performance at high capacity factors. A close second to the PFCR/R system is the point-focus distributed receiver system using dish-mounted Stirling engine generators (PFDR/S), which offers capital and energy costs comparable to the central receiver and ranks higher than the central receiver at low power ratings and capacity factors. Although it has excellent potential, the PFDR/S system involves greater risk because it is less well developed than the central receiver.

Five systems (Group II) achieve acceptable rankings over a wide range of capacities and capacity factors. Parabolic dish technology is represented twice, once with central Rankine power conversion (PFDR/CR) and once with dish-mounted Brayton engines (PFDR/B), indicating the continued viability of that collector technology. In particular, the PFDR/CR system shows costs and performance approaching Group I systems at capacity factors just under 0.7. Two Brayton-cycle systems (PFDR/B and PFCR/B) show potential, but consistently rank lower than Rankine-cycle or Stirling-cycle conversion

Table 1-1. COMPARATIVE RANKING OF 1-10 MW_e SYSTEMS FOR UTILITY APPLICATIONS

Group	Rank	System
I	1	Point-focus central receiver with Rankine-cycle power conversion (PFCR/R)
	2	Parabolic dish collectors with distributed Stirling engines (PFDR/S)
II	3	Parabolic dish collectors with central Rankine power conversion (PFDR/CR)
	4	Parabolic dish collectors with distributed Brayton engines (PFDR/B)
	5	Point-focus central receiver with Brayton power conversion (PFCR/B)
	6	Parabolic trough system with central Rankine power conversion (LFDR-TC)
	7	Low concentration, nontracking CPC system (LCNT)
III	8	Line-focus central receiver system (LFCR)
	9	Fixed mirror, distributed focus bowl system (FMDF)
	10	Segmented trough with tracking receiver system and central Rankine power conversion (LFDR-TR)
	11	Shallow solar pond system (SSP)

options with identical collector technologies. Finally, the line-focus distributed receiver with tracking collector (LFDR-TC), or parabolic trough, and the low concentration nontracking system (LCNT), or compound parabolic concentrator, which operate at lower temperatures, show potential for small power system applications, but generally do not rank high. Both the LFDR-TC and LCNT systems may be strong contenders in other market applications such as process heat. In fact, the relative commercial and environmental advantages of the LCNT system were so strong that it was the only concept to be significantly affected by those qualitative criteria in this ranking.

The four remaining systems (Group III) are inappropriate for small electric power applications. Although other market applications may be suitable for certain systems (such as low temperature IPH from shallow solar ponds), the systems in Group III, when considered for electric applications, fared poorly on important cost and performance criteria.

The two top-ranked systems, PFCR/R and PFDR/S, can yield $\overline{BBEC}$s that are competitive with expected costs of electrical energy from conventional alternatives in the 1990s. Levelized busbar energy costs as low as 93 mills/kWh are predicted for both the PFDR/S (capacity factor ~0.4) and the PFCR/R (capacity factor ~0.7) systems.

Sensitivity studies indicate that if concentrator costs are reduced and engine efficiency increased to the levels believed possible by advocates of the PFDR/S system, busbar energy costs as low as 75 mills/kWh could be achieved. These concentrator and engine developments are beyond those considered likely by 1990 in this study and would require vigorous component and system development. If these developments are achieved and government incentives such as highly leveraged low-interest (6%) financing were initiated, busbar energy costs ($\overline{BBEC}$) might be further reduced to as low as 50 mills/kWh. These sensitivity studies are described in more detail in Section 3.2.2.

In addition to low $\overline{BBEC}$, user groups have indicated a strong preference for low capital costs. Because capital markets of utilities are under constant pressure to support expansions, it is critical that solar thermal power systems, while providing low busbar energy costs, do not exceed acceptable levels of capital cost in order to compete for that capital.

1.2 THE COMPARATIVE RANKING OF 0.1-1 MW_e SYSTEMS FOR INDUSTRIAL APPLICATIONS

Table 1-2 presents the ranking of the ten generic systems considered for industrial applications, which do not always correspond to the systems considered for utility applications. The study of the 1-10 MW_e systems indicated that some systems could not provide electric power in the capacity ranges that are economically competitive with other solar systems. The shallow solar pond (SSP), the line-focus central receiver (LFCR), and the line-focus trough with tracking receiver (LFDR-TR) were eliminated from the 0.1-1 MW_e evaluation.

At the beginning of the 0.1-1 MW_e phase of this study in April 1978, newly available data indicated that two systems not considered in the earlier 1-10 MW_e study could be potentially competitive with the other systems. These two systems, the point-focus central receiver with a tower-mounted Stirling engine (PFCR/S) and the point-focus distributed receiver with a Rankine engine and generator mounted at the focal point (PFDR/R), have been included in the ranking of systems for industrial applications.

Table 1-2. COMPARATIVE RANKING OF 0.1-1 MW_e SYSTEMS FOR INDUSTRIAL APPLICATIONS

Group	Rank	System
I	1	Parabolic dish collectors with distributed Stirling engines (PFDR/S)
II	2	Parabolic dish collectors with distributed Brayton engines (PFDR/B)
	3	Point-focus central receiver with central Stirling power conversion (PFCR/S)
	4	Point-focus central receiver with Brayton power conversion (PFCR/B)
	5	Point-focus central receiver with Rankine power conversion (PFCR/R)
	6	Parabolic dish collectors with distributed Rankine engines (PFDR/R)
	7	Parabolic dish collectors with central Rankine power conversion (PFDR/CR)
III	8	Parabolic trough system with central Rankine power conversion (LFDR-TC)
	9	Fixed mirror, distributed focus bowl system (FMDF)
	10	Low concentration, nontracking CPC system (LCNT)

The relative ranking of 0.1-1 MW_e systems presented in Table 1-2, is based upon mid-1990 cost and performance predictions as presented to 14 industrial and small community decision makers. The ranking favors systems of 1 MW_e capacity, with low capacity factors.

The 1 MW_e systems rank higher because of economies of scale, i.e., electricity generated by the systems of larger capacity is less expensive than the electricity produced by the 0.1 and 0.3 MW_e plants.

Low capacity factors rank higher because decision makers prefer systems with low capital costs and fewer hours of storage. Storage is not valuable enough in 1979 to offset associated high capital costs because of lower costs of back-up electricity during periods when storage is most useful, i.e., during the night. If, in the 1990s, the cost of electricity during off-peak periods is the same as the cost during the remainder of the day (peaking periods), users would prefer higher capacity factors with some increased tolerance for high capital cost.

The generic systems fell into three significant groups as shown in Table 1-2. Group I contains only the PFDR/S system, which surpassed other systems because of the high efficiency of the Stirling engine at small sizes, the use of a dish with a larger diameter and a correspondingly larger, more efficient engine than was used in the 1-10 MW_e study (see Section 4.0), the high optical efficiency of the parabolic dish/receiver combination, and the user's preference for lower capacity factors.

The majority of the systems that were evaluated fall into Group II which is led by the PFDR/B system. This system benefits from most of the advantages as the highest ranked system, PFDR/S.

The central receiver systems rank in the center of Group II. The highest ranked of the point-focus central receiver systems uses central Stirling or Brayton engine generators, which retain high efficiency at smaller capacities. The central Rankine conversion system drops in efficiency at small sizes, particularly at 0.1 and 0.3 MW_e.

Parabolic dish systems with either distributed (PFDR/R) or central (PFDR/CR) Rankine power conversion fall into the lower end of Group II. The PFDR/R system suffers from the low efficiency of Rankine engines in the 75 to 100 kW_e range. The PFDR/CR system has high thermal transport losses as well as poor engine performance.

Group III contains three systems that operate in medium temperature ranges (285°C) with central Rankine engines. Poor engine efficiency largely results from lower turbine inlet temperatures and the effect of small sizes. These systems also do not rate as high in optical efficiency as the other systems.

The top ranked systems, Group I and the upper half of Group II, can possibly yield electrical energy for industrial use at less than 100 mills/kWh, depending on the number of hours of storage desired. The highest ranked system, PFDR/S, shows the potential to supply electricity for as low as 76 mills/kWh, a cost that is competitive with the rate that small industrial users often pay at present, i.e., 60-90 mills/kWh.

1.3 SENSITIVITY STUDIES

Sensitivity studies were performed to determine the effects of different economic scenarios on the cost of systems. Results of these studies are discussed in detail in Sections 3.0 and 4.0. Assignment of costs for the baseline calculations of capital cost and $\overline{BBEC}$ were dependent upon engineering judgment. Each of the assumed costs was representative of a wide range of costs available from different sources. Because the uncertainties associated with each cost input are difficult to ascertain without extensive and specific

manufacturing data, a different approach was used to determine the effect of cost uncertainty on the ranking.

After the initial ranking of baseline systems, the total capital cost of each generic system was reduced or increased while the capital costs of the other systems were held constant. Because the total capital cost includes collector, receiver, land, and balance of plant costs, the effect of these variations could be attributed to changes in either cost or performance. The particular part of the system in which these changes might occur was not identified. Systems that performed poorly in the baseline ranking or had large cost uncertainties were allowed a greater degree of cost variation in the sensitivity studies. When these sensitivity tests were performed, insignificant changes in the overall ranking resulted, indicating that there were significant differences among systems.

The uncertainty factors, which were also applied to other attributes, such as capacity factor, are shown in Sections 3.3 and 4.3. The effects of these sensitivity studies on the final rankings are also described in these sections.

1.4 NEAR-TERM READINESS OF GENERIC SYSTEMS

The ranking was intended to determine the mid-1990 potential of selected systems. The ranking considered expected technological advances, but did not formally consider near-term readiness, R&D risk or magnitude, or the need for demonstration to the potential user.

Tables 1-3 and 1-4 list commercial readiness characteristics encountered during the study of the 1-10 and 0.1-1 MW_e systems, although they are not considered as part of the formal decision criteria.

Systems are categorized into three groups that define their relative degrees of commercial readiness and acceptability. The state of the development of components and complete systems and the degree of demonstration that has been or soon will be shown were considered.

Neither utility nor industrial users will accept untried systems, even if the price is competitive with alternate fuels. Citing the difficulties of integrating multiple generators within a power plant, the utility decision makers strongly prefer systems with central generation. Although SERI does not envision significant technical problems with integrating small solar thermal systems into utility networks, successful demonstration will be required before these systems are accepted on a large scale by potential users. The more a solar thermal system differs from current conventional power generation systems, the greater the degree of demonstration that will be required.

For near-term availability, LFDR-TC appears to be the closest to deployment. This technology is currently being field tested in systems to provide thermal and mechanical power and operating data is being collected and analyzed.

The PFCR/R system has also reached a relatively high state of development. Second and third generation designs for heliostats and receivers are being developed. Central receiver systems are being considered for a variety of near-term applications.

Showing the greatest overall potential for the mid-1990s, the PFDR/S system is the least proven for near-term applications. To reach the energy and capital costs assumed by the

study, significant development must reduce the cost of parabolic dishes, reduce the cost and increase the lifetime of Stirling engines to at least fifteen years, and to attain higher capacity factors, must reduce the cost and demonstrate the feasibility of large electrical storage systems such as redox batteries. All systems considered in the study have received some development, at least up through the collector subsystem level, although the degree of development varies widely among systems.

The lowest ranked system in the 1-10 MW_e capacity range, the shallow solar pond (SSP), has been demonstrated as a full-scale IPH system. This system is considered less attractive for electric power applications in the near-term because it has high energy and capital costs relative to the other solar thermal systems.

1.5 CONCLUSIONS AND RECOMMENDATIONS

Based on the results of this study, the following recommendations are suggested:

- Vigorous development of PFCR/R and PFDR/S systems should be encouraged because of their high potential for mid-1990 commercialization.
- High priority should be given to the development of parabolic dish collectors and advanced electric storage technologies because these subsystems are critical to the successful commercialization of many distributed generation concepts.

Table 1-3. PRESENT RELATIVE COMMERCIAL READINESS OF 1-10 MW_e GENERIC SYSTEMS FOR UTILITY USE

		Commercial Readiness Characteristics			
MADA Ranking Group	Generic System Name	Relative State of Development	Relative Technical/ Cost Risk	Relative R&D Required	Relative Need for Demonstration to Utilities
1	PFCR/R [a]	High	Low	Low	Low
	PFDR/S [c]	Low	Medium	High	High
2	PFDR/CR [b]	Low	Medium	Medium	Medium
	PFDR/B [c]	Low	Medium	High	High
	PFCR/B [b]	Medium	Medium	Medium	Low
	LFDR-TC [a]	High	Low	Low	Medium
	LCNT [b]	Low	Medium	Medium	High
3	LFCR [b]	Low	High	High	Low
	FMDF [b]	Medium	High	High	Medium
	LFDR-TR [b]	Low	High	Medium	Medium
	SSP [b]	Medium	Low	Low	High

[a]Closest to Commercial Readiness

[b]Intermediate Systems

[c]Furthest from Commercial Readiness

Table 1-4. PRESENT RELATIVE COMMERCIAL READINESS OF 0.1-1 MW_e GENERIC SYSTEMS FOR INDUSTRIAL USE

MADA Ranking Group	Generic System Name	Commercial Readiness Characteristics: Relative State of Development	Relative Technical/ Cost Risk	Relative R&D Required
1	PFDR/S [c]	Low	Medium	High
2	PFDR/B [c]	Low	Medium	High
	PFCR/S [c]	Low	Medium	Medium
	PFCR/B [b]	Medium	Medium	Medium
	PFCR/R [a]	High	Low	Low
	PFDR/R [c]	Low	Medium	High
	PFDR/CR [b]	Low	Medium	Medium
3	LFDR-TC [a]	High	Low	Low
	FMDF [b]	Medium	High	High
	LCNT [b]	Low	Medium	Medium

[a]Closest to commercial readiness

[b]Intermediate systems

[c]Furthest from commercial readiness

- A limited research and development effort should be directed toward the improvement of subsystems and systems for the PFDR/R, PFDR/CR, PFDR/B, and PFCR/B concepts.
- Because of their availability for near-term applications, development of the LFDR-TC and PFCR/R systems should receive high priority.
- Development of the LCNT concept should continue. If this nontracking system reaches the performance and cost targets used in this study, it may show increased potential because of user preference for low-maintenance systems.
- The LFCR, FMDF, LFDR-TR, and SSP systems should not be included in the small solar electric power systems program.
- Further analysis of the PFCR/S system should be pursued to determine the practicality of development beyond the conceptual stage.
- Close attention must be paid to the requirements and preferences of potential users. User attitudes may change as the cost of conventional systems and fuels increase; hence, these attitudes should be periodically checked and any changes reflected in the development of small solar thermal systems.
- Demonstration will be required of all concepts to convince potential users that small solar thermal systems can meet their needs. Utilities strongly prefer solar thermal systems that most resemble current conventional systems.

SERI

SECTION 2.0

STUDY OVERVIEW

2.1 SIGNIFICANCE AND SCOPE OF THE STUDY

The study yielded a ranking of generic solar thermal electric power systems, a uniform method for comparing solar plants of all types and applications, and a flexible computer code that simulates the performance and determines the capital and energy costs of these plants for many operating strategies and economic scenarios. Each of these products is described in greater detail in later sections of this report.

The primary products of the study are two ordered rankings of generic solar thermal electric power systems based upon two capacity ranges and the associated applications. Each ranking considered a wide range of capacity factors. The 1-10 MW_e systems were evaluated according to ground rules representative of grid-connected, utility applications. The smaller systems of 0.1-1 MW_e capacity were evaluated in conformity with ground rules typical of industrial applications in which the entire output of the solar plant is used or stored. These smaller plants did not feed into the grid, but used it as a backup source. Other backup sources would include diesel engine generators. Each generic system was appraised according to criteria characteristic of the preferences of potential users. One ground rule limited the maximum power supplied at any time to the rated output of the plant to simplify the comparative ranking study and avoid the need to look at particular utility or industrial demand patterns. This constraint affects the performance of both distributed and central generation concepts by forcing thermal energy and electricity produced in excess of plant rating to be stored. Without this constraint, the alternative to storing electricity produced in excess of plant rating was, in the case of utility systems, delivering it to the grid. This alternative would avoid the storage charging and discharging losses and, therefore, resulting in a higher attainable capacity factor. It also would avoid the need for the capital cost of the extra storage capacity, resulting in lower system total costs. Therefore, in actual plant operation excess electricity generated by a distributed system with electrical storage should be put onto the grid instead of into storage because, for a given capacity factor, this will effectively reduce system total cost.

For the 1-10 MW_e study the grid was assumed to be infinite, i.e., all energy supplied could be used without considering the utility load profile. It was further assumed that the value of energy delivered to the grid was independent of the time of day and day of the year.

System performance was based upon environmental data taken at a site near Barstow, California. This site was chosen because of its desirability for a solar power plant and because insolation data was available in sufficiently small time increments (15 minutes) to allow detailed simulation of plant performance. The insolation values used in the performance code were obtained from the 1976 Barstow environmental data tape supplied by JPL.

The cost estimates for each technology and the resulting energy costs do not represent either established DOE goals or the ultimate potential costs of a system. Emphasis has been placed upon using costs that can reasonably be achieved by the mid-1990s, as well as upon using a common economic scenario so that a credible ranking could be obtained. Further discussions concerning the costing philosophy are contained in Appendix A.

2.2 APPROACH

The evaluation followed a specific methodology that not only included establishment of ground rules, but the selection of generic systems, the characterization of cost and performance using a sophisticated computer simulation, and finally, the application of decision analysis techniques.

2.2.1 Selection of Generic System Options

A generic collector option is defined by an optical model that represents a group of specific collector technologies. Within some generic collector categories, there are several design variations for which cost and producibility estimates could be assigned with varying degrees of confidence. The scope of this study does not allow an evaluation of all the variations in sufficient detail to distinguish between them; therefore, the analysis and ranking was confined to fundamental generic collector options. Generic power-plant systems that used generic collector options were conceptualized. In some cases, more than one generic system was conceived using the same collector option.

After ranking the systems, one may determine if a specific design variation would significantly change the position in the ranking of any generic system. If, at a later date, promising variations of any generic system emerge, they can also be evaluated. Additional effort will be necessary to conceptualize the system, derive detailed cost and performance data, run the simulation, and perform the ranking for any proposed design variations.

Table 2-1 identifies the generic options of systems selected by SERI for consideration in terms of basic collector subsystem characteristics. The detailed designs for the generic systems considered in the study are described in Sections 3.2 and 4.2.

2.2.2 System Conceptualization and Characterization

System cost and performance are determined using the system simulation model BALDR-1* that calculates the annual system performance and determines both the capital and levelized annual energy costs for a specified economic scenario. Appendix B presents a detailed description of the BALDR-1 simulation.

The system's characteristic cost and performance input data for use in BALDR are derived from conceptual designs of the generic systems. First, a preliminary advanced concept was derived for each system. Operating temperatures were determined for thermal processes. All subsystems and major components were defined and costs assigned. The major data sources were other laboratories and the published literature, including government and contractor development reports and manufacturers' data.

Each conceptual system design, including cost and performance parameters, was reviewed by various individuals and organizations, including advocates of the particular system. Significant contributors are listed in Appendix H. The resulting comments were then reviewed at SERI and incorporated into the system design as appropriate.

---

*In Scandanavian mythology, Baldr, the god of sunlight, personifies wisdom, beauty, and brightness.

Table 2-1. GENERIC SYSTEMS CONSIDERED IN THE COMPARATIVE RANKING OF 0.1-10 MW_e SOLAR THERMAL POWER SYSTEMS

System	Conversion Cycle	Acronym	0.1-1 MW_e	1-10 MW_e
• Point-focus, distributed receiver	Distributed Stirling	PFDR/S	Yes	Yes
	Distributed Brayton	PFDR/B	Yes	Yes
	Distributed Rankine	PFDR/R	Yes	No
	Central Rankine	PFDR/CR	Yes	Yes
• Point-focus, central receiver	Central Rankine	PFCR/R	Yes	Yes
	Central Stirling	PFCR/S	Yes	No
	Central Brayton	PFCR/B	Yes	Yes
• Line-focus, distributed receiver, tracking collector	Central Rankine	LFDR-TC	Yes	Yes
• Line-focus, distributed receiver, tracking receiver	Central Rankine	LFDR-TR	No	Yes
• Fixed mirror, distributed focus	Central Rankine	FMDF	Yes	Yes
• Low Concentration, Nontracking (CPC)	Central Rankine	LCNT	Yes	Yes
• Shallow solar ponds	Distributed Rankine	SSP	No	Yes
• Line-focus, central receiver	Central Rankine	LFCR	No	Yes

Based upon the results of the internal and external reviews, revised versions of the system designs were created, subsystems defined, and the necessary cost and performance input data generated. System input data were adjusted to reflect the changes in characteristics over the full range of capacities and capacity factors. For example, the height and cost of a tower for a central receiver plant were adjusted as the heliostat field size changed, owing to plant-rated capacity increases from 1 through 10 MW_e and increases in amount of thermal storage.

The BALDR-1 simulation determined the annual performance of the plant, trading off between collector field area and hours of storage to find the minimum cost combination necessary to achieve a desired capacity and capacity factor. The output from a simulation run includes capital cost, levelized O&M, and levelized energy cost for each combination of capacity and capacity factor. Table 2-2 describes the baseline economic scenario that is representative of investor-owned utilities in 1976 [3].

With the exception of the alternative energy cost (used only in 0.1-1 MW_e ranking), the same cost factors were employed in both the 1-10 MW_e utility and 0.1-1 MW_e industrial system rankings. The alternative fuel cost of 80 mills/kWh represents the mid-1990 cost

of fuel to the industrial users interviewed for the 0.1-1 MW_e study. The present cost of fuel to these users ranged from 60-90 mills/kWh.

Capital and levelized production costs were used in the formal ranking process that was based on multiattribute decision analysis (MADA). Because the intent of the study was to obtain the most appropriate ranking of these generic technologies, evaluation criteria included social, environmental, and institutional impacts (for the 1-10 MW_e ranking), as well as cost and performance data. The preferences of the ultimate users, or decision makers, were explicitly considered in the formal MADA technique that established the preference profile of each decision maker. This technique also ensured consistent interpretation of the ranking and established reliability throughout the analysis from input data to the final recommendations of Section 1.0. The decision analysis method was based on work by R. L. Keeney and H. Raiffa [3]. Variations of this method have been used in previous energy-related studies by various organizations including utilities. An introduction to MADA is included in Appendix C.

Table 2-2. COST FACTORS USED IN 0.1 - 10 MW_e SYSTEMS EVALUATION

	Cost Factor	Value
a.	Raw land	$5,000/acre
b.	Cost of capital for a typical investor-owned utility	8.6%
c.	Composite income tax rate effective	40.0%
d.	Rate of general inflation	6.0%
e.	Escalation rate for capital costs	6.0%
f.	Escalation rate for operating costs	7.0%
g.	Escalation rate for maintenance costs	7.0%
h.	Capital recovery factor (30 yrs)	9.39%
i.	Property taxes, insurance, etc.	2.25%
j.	Fixed charge rate, annualized	15.7%
k.	Alternate energy cost	80 mills/kWh

SECTION 3.0

RESULTS OF 1-10 MW_e SYSTEM EVALUATION

3.1 DESCRIPTIONS OF GENERIC SYSTEMS

Specific generic systems for use in utility applications were designed to be representative of mid-1990s technology. The particular components selected do not necessarily reflect a particular preferred design direction to be pursued in each case.

Figure 3-1 identifies the collector subsystem characteristics of the generic options examined in the 1-10 MW_e ranking. Table 3-1 describes the combinations of transport, storage, and power conversion technologies that comprise each generic system.

3.1.1 Point-Focus Central Receiver/Rankine System

The representative PFCR/R system is an advanced salt system that uses draw salt as a receiver coolant for the heat transfer fluid between the receiver and thermal storage and also uses draw salt as the thermal storage medium. A central Rankine steam turbine is employed for power conversion. Figure 3-2 presents a schematic drawing of the system. One feature of this system, which is shared with all other systems incorporating thermal storage modeled here, is that the temperature from thermal storage is approximately equal to the temperature from the collector field.

The concentrator field consists of two-axis tracking heliostats (Fig. 3-3) arranged in either a north field configuration (Fig. 3-4) for smaller plants or in an elliptical surround field configuration for larger plants. Each heliostat reflective surface is back-silvered thin glass (~1 mm, 0.040 in.) of 50 m^2 (540 ft^2) aperture.

The receiver is either a single cavity facing north (north field) or four cavities facing north, south, east, and west (surround field). The cavity walls are coated with a selective surface. The receiver is supported on a free-standing steel tower that varies from 30 m to 95 m in height, depending on plant rating.

Thermal storage uses a sensible heat thermocline of molten draw salt. The storage tanks are lined with internal insulation to permit the use of lower cost materials for their construction.

3.1.2 Point-Focus Central Receiver/Brayton System

The representative PFCR/B system incorporates a closed-cycle recuperated Brayton engine with electrical storage. The Brayton engine and generator are close-coupled to the receiver atop the tower. The engine is sized to four times rated plant capacity for higher capacity factors. See Fig. 3-5.

The concentrator field consists of two-axis tracking heliostats (Fig. 3-3) arranged in either a north field configuration for smaller plants or in an elliptical surround field configuration for larger plants (Fig. 3-4). Each heliostat reflective surface is back-silvered thin glass of 50-m^2 (540-ft^2) aperture.

Table 3-1. Combination of Technologies Considered in 1-10 MW_e Systems Evaluation

Concentrator Options	System Options												
	Conversion					Transport				Storage			
											Thermal		
	Cent-Rankine	Cent-Brayton	Dist-Rankine	Dist-Brayton	Dist-Stirling	Electrical	Water	Salt	Oil	Electrical	Oil	Salt	Water
Point-Focus Central Receiver	●							●				●	
Point-Focus Central Receiver		●				●				●			
Line-Focus Central Receiver	●							●				●	
Point-Focus Distributed Receiver	●							●				●	
Point-Focus Distributed Receiver				●						●			
Point-Focus Distributed Receiver					●	●				●			
Fixed Mirror Distributed Focus	●							●				●	
Line-Focus Distributed Receiver — Tracking Collector	●								●		●		
Line-Focus Distributed Receiver-TrackingReceiver	●								●		●		
Low Concentration Nontracking	●								●		●		
Shallow Solar Ponds			●			●	●						●

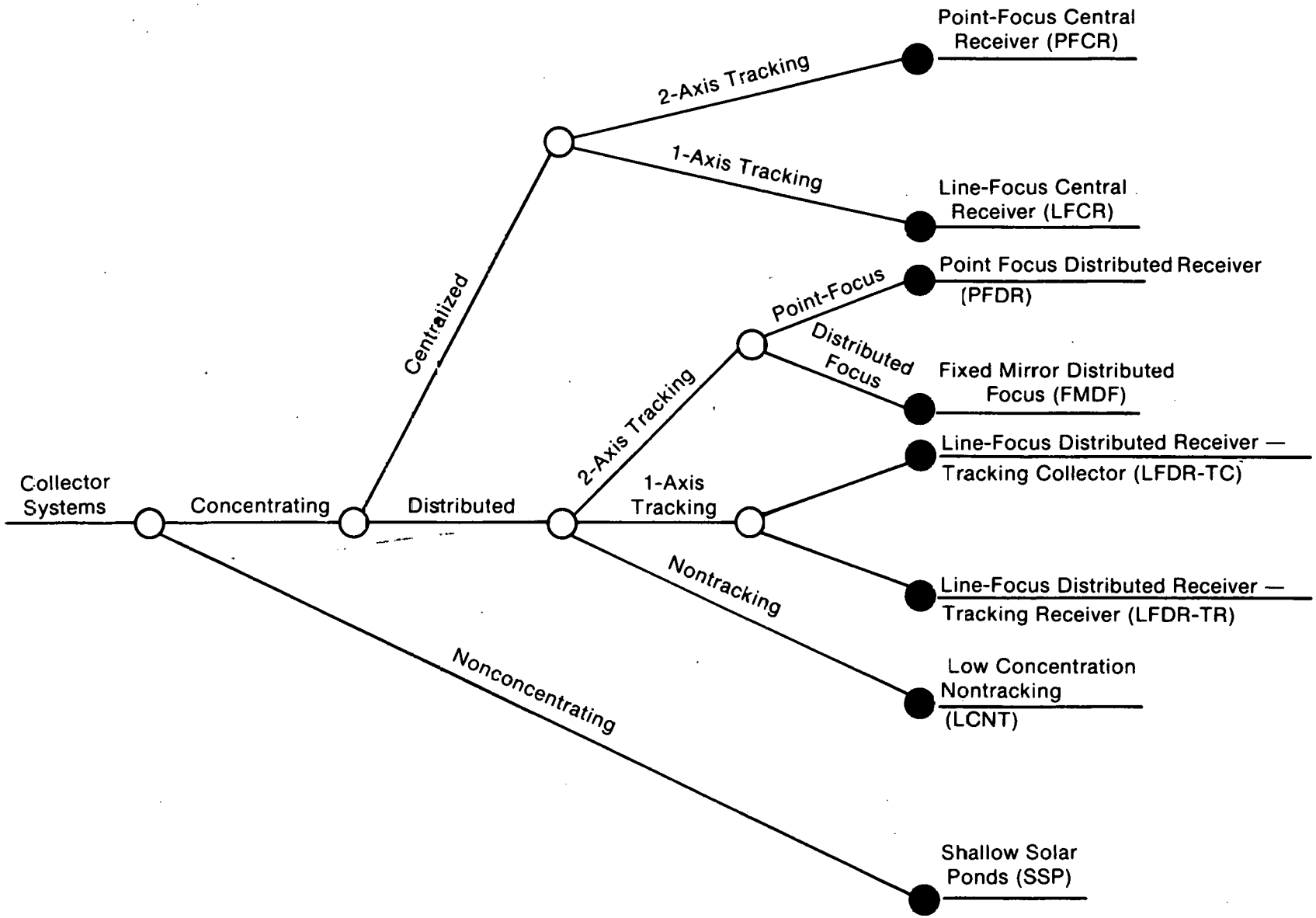

Figure 3-1. Generic Options Considered in the 1-10 MW_e Ranking

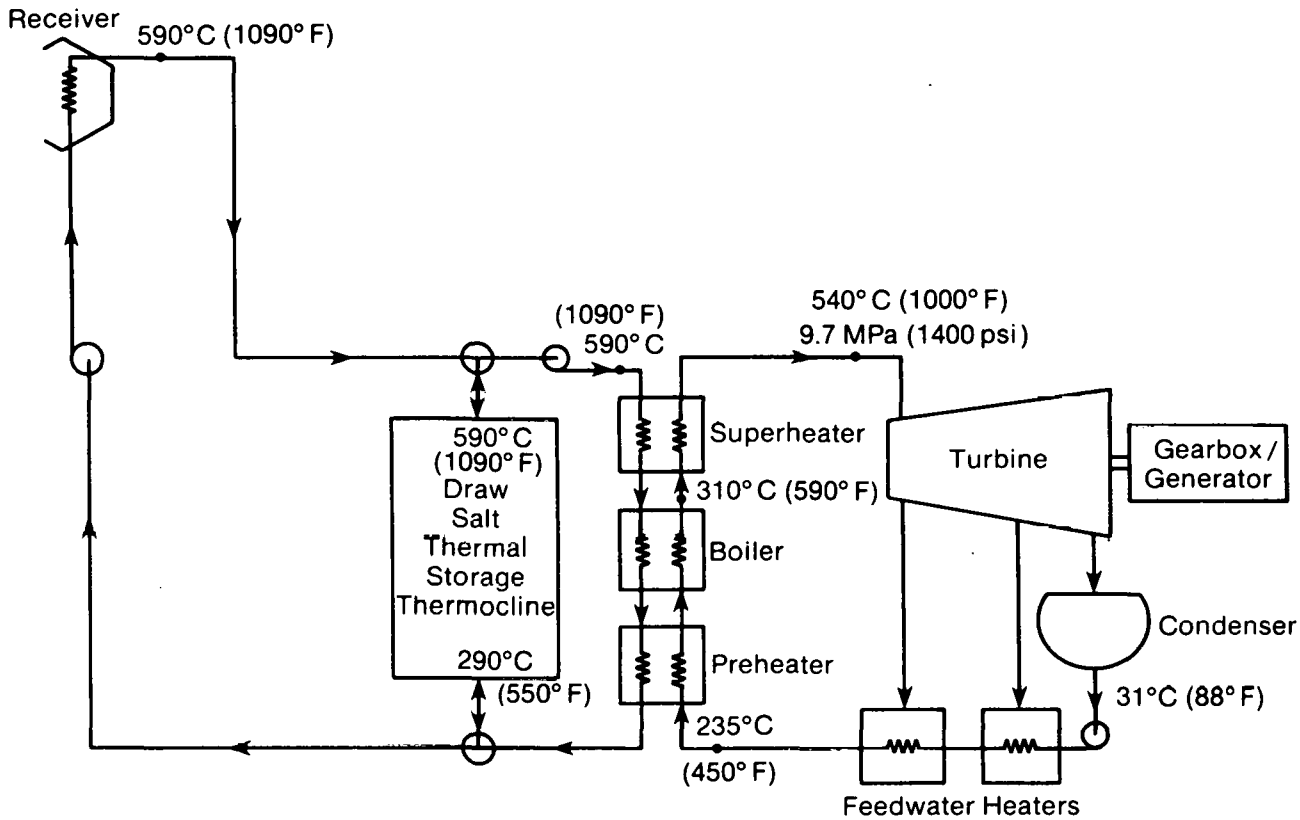

Figure 3-2. Point-Focus Central Receiver/Rankine (PFCR/R) System Flow Schematic Drawing

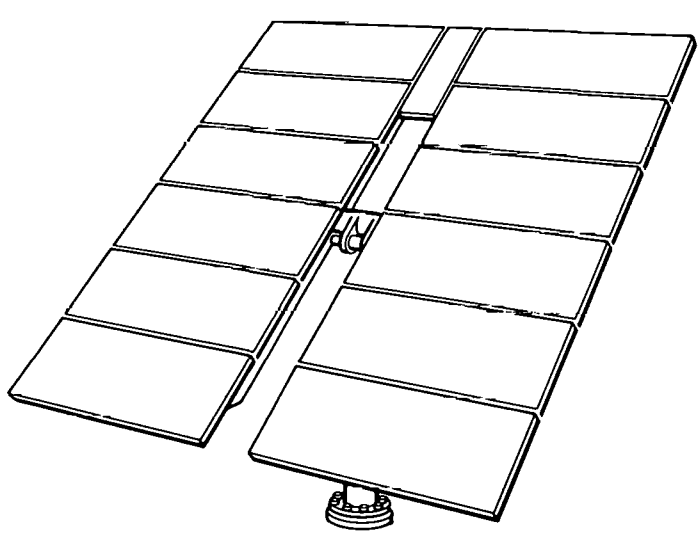

Figure 3-3. Two-Axis Tracking Heliostat (PFCR)

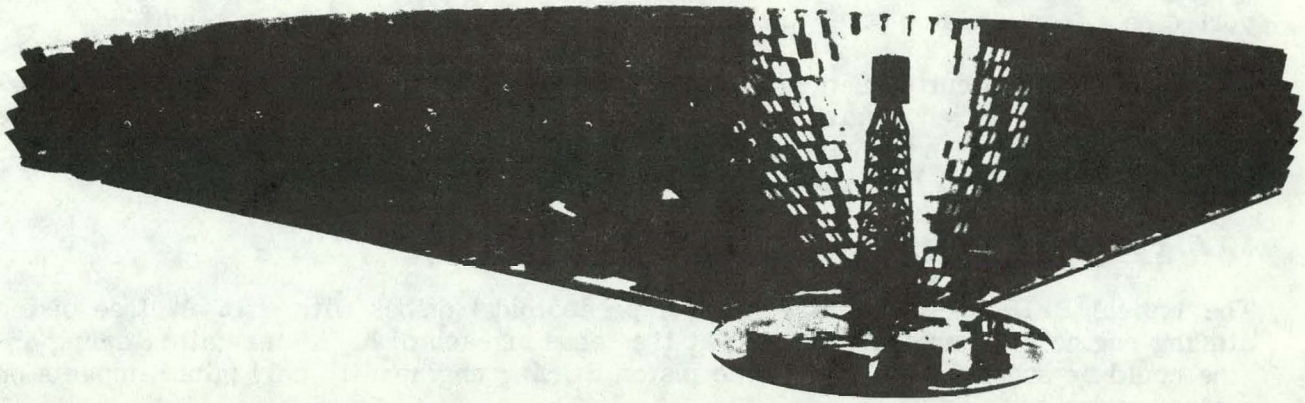

Figure 3-4. Point-Focus Central Receiver (PFCR)

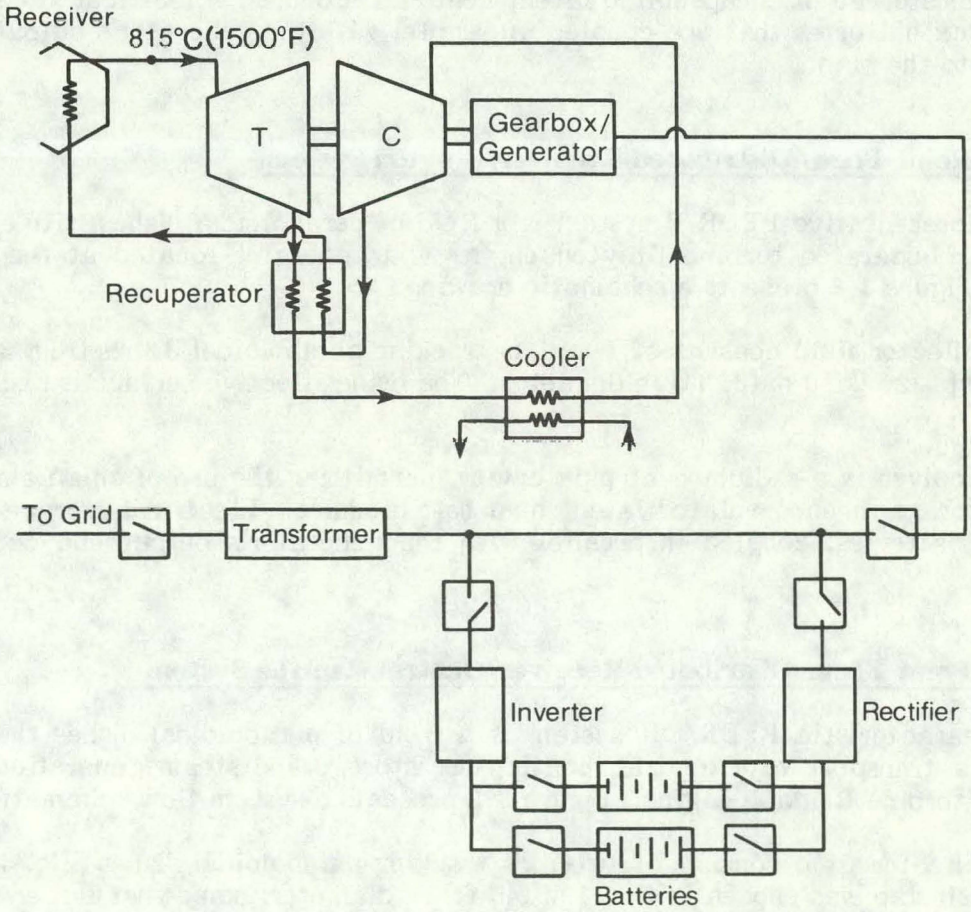

Figure 3-5. Point-Focus Central Receiver/Brayton (PFCR/B) System Flow Schematic Drawing

The receiver is either a single cavity facing north (north field) or four cavities facing north, south, east, and west (surround field). The cavity and engine/generator are supported on a free-standing steel tower which varies from 30 m to 95 m in height.

Because of the difficulty of integrating thermal storage into the system, electrical storage is provided by redox batteries. The batteries are dedicated to the plant and are coupled in parallel with the generator output.

3.1.3 Point-Focus Distributed Receiver/Stirling System

The typical PFDR/S system is a field of paraboloidal dishes with a 15-kW free piston Stirling engine and generator located at the focus of each dish. A kinematic Stirling engine could be substituted for the free piston Stirling engine with only minor impacts on system design and cost. See Fig. 3-6.

The collector field consists of two-axis tracking paraboloidal dishes (Fig. 3-7). The nominal dish size is 10 m (33 ft) in diameter. The dish reflective surface is back-silvered thin glass.

The receiver is a sodium heat pipe cavity, which permits the use of small amounts of thermal storage in encapsulated latent heat salt modules. Electrical storage is provided by redox batteries that are coupled in parallel with the generator's output and are dedicated to the plant.

3.1.4 Point-Focus Distributed Receiver/Brayton System

The representative PFDR/B system is a field of paraboloidal dishes with a 15-kW closed-cycle recuperated turbine Brayton engine and generator located at the focus of each dish. Figure 3-8 presents a schematic drawing.

The collector field consists of two-axis tracking paraboloidal dishes (Fig. 3-7). The nominal dish size is 10 m (33 ft) in diameter. The dish reflective surface is back-silvered thin glass.

The receiver is a sodium heat pipe cavity, permitting the use of small amounts of thermal storage in encapsulated latent heat salt modules. Electrical storage is provided by redox batteries, coupled in parallel with the generator's output and dedicated to the plant.

3.1.5 Point-Focus Distributed Receiver/Central Rankine System

The characteristic PFDR/CR system is a field of paraboloidal dishes that heat molten salt for transport to a central location for storage and steam generation for a central steam turbine Rankine engine. Figure 3-9 presents a system flow schematic drawing.

The collector field consists of two-axis tracking paraboloidal dishes (Fig. 3-7). The nominal dish size was chosen to be 14 m (46 ft) in diameter, somewhat larger than that used for the PFDR/S and PFDR/B systems to minimize thermal transport costs. The dish reflective surface is back-silvered thin glass.

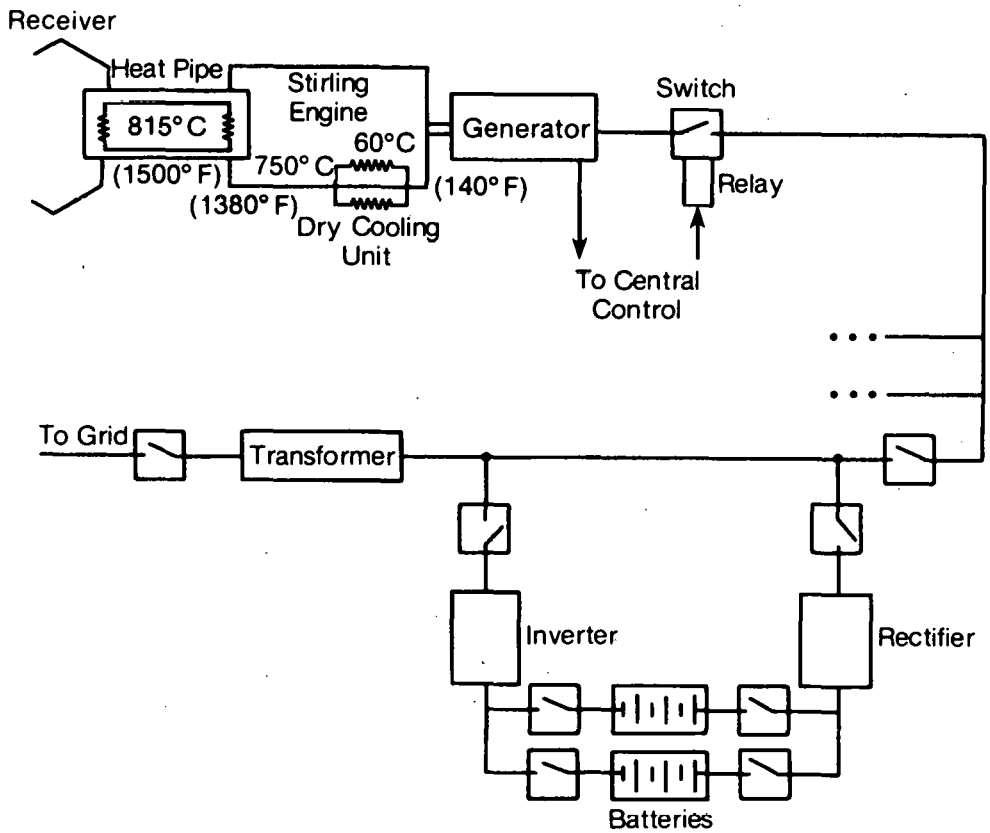

Figure 3-6. Point-Focus Distributed Receiver/Stirling (PFDR/S) System Flow Schematic Drawing

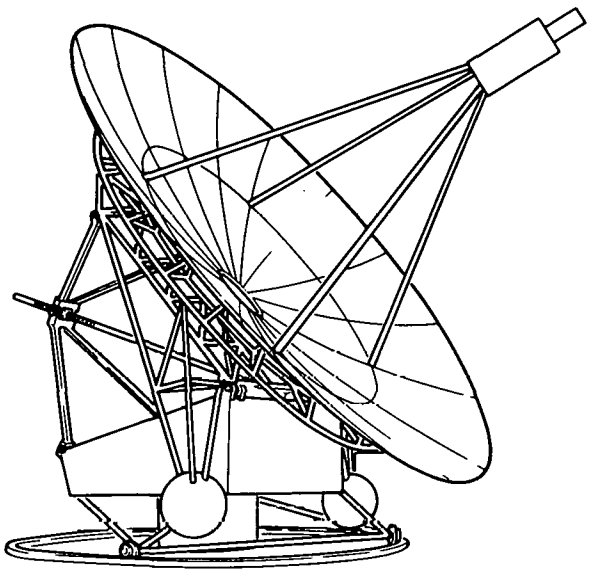

Figure 3-7. Point-Focus Distributed Receiver (PFDR) Dish

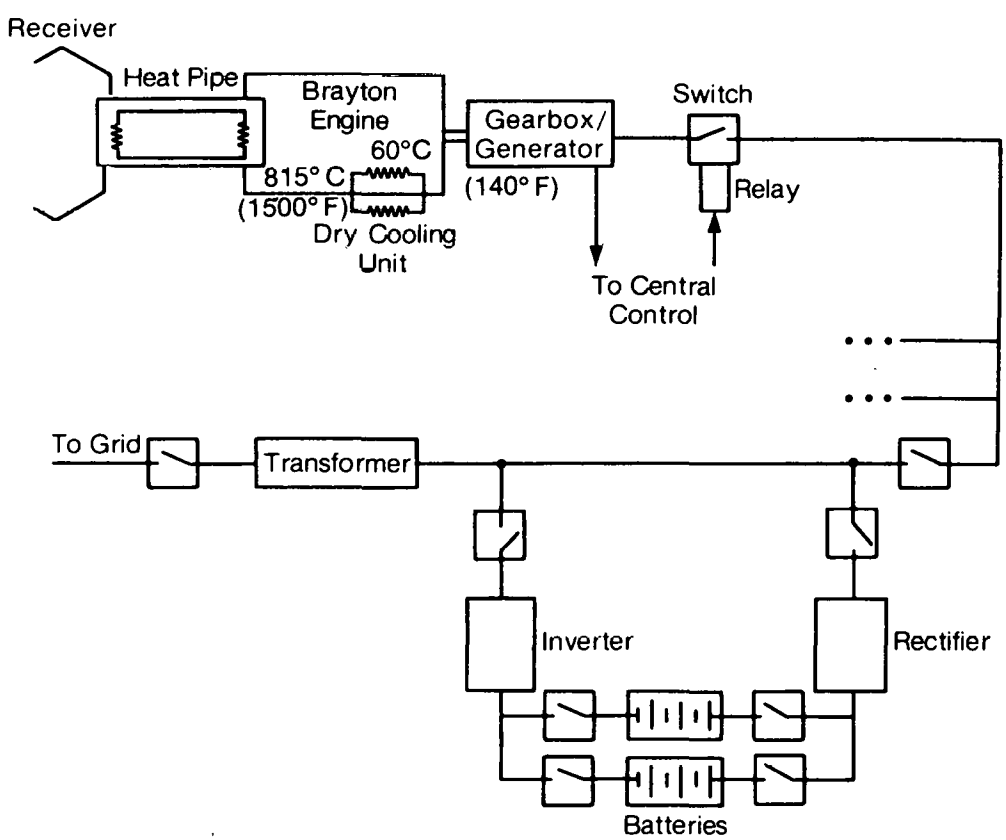

Figure 3-8. Point-Focus Distributed Receiver/Brayton (PFDR/B) System Flow Schematic Drawing

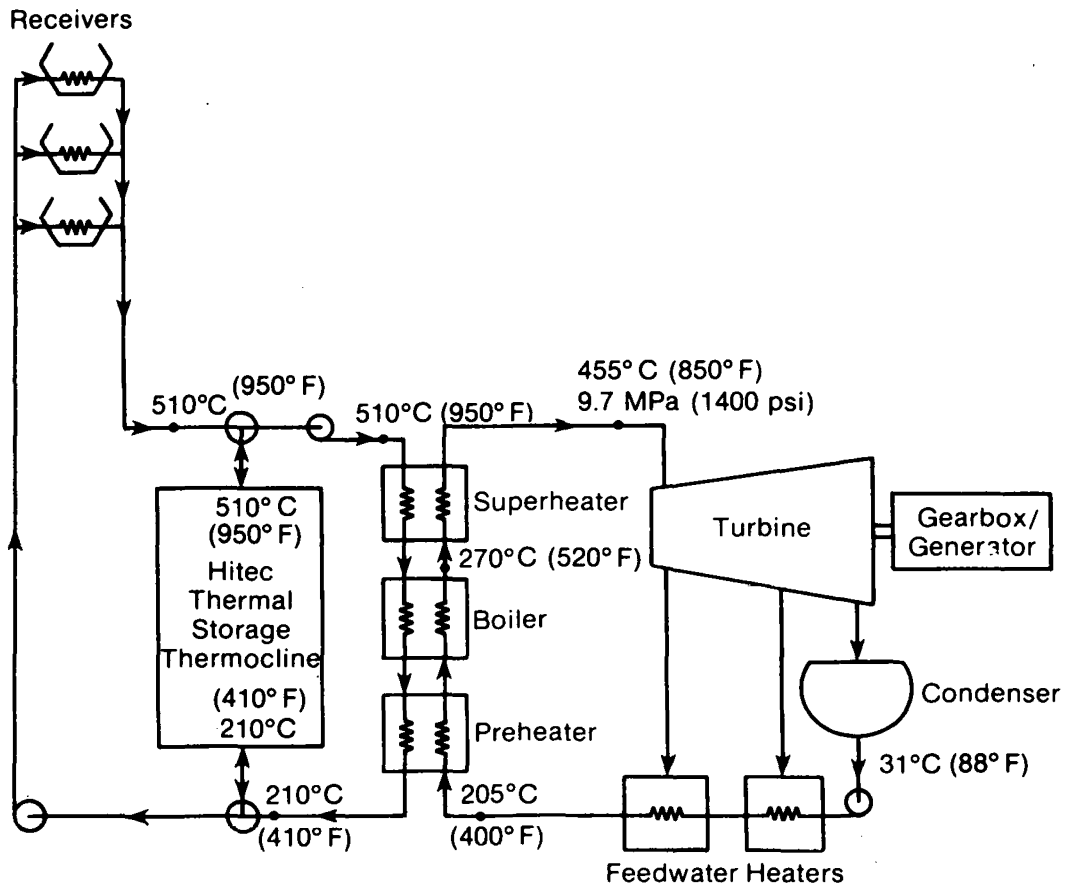

Figure 3-9. Point-Focus Distributed Receiver/Rankine (PFDR/CR) System Flow Schematic Drawing

The receiver is a sodium heat pipe cavity with a selective surface. Molten Hitec is used as the receiver coolant and heat transfer fluid. Salt is circulated through the transport system at night to prevent freezing.

Thermal storage uses a sensible heat thermocline of molten Hitec salt. The storage tanks are internally insulated to allow low cost materials for their construction.

Dishes enclosed in plastic bubbles to reduce the structural requirements of the dish itself were also examined. Its lower capital cost was almost entirely offset by its higher anticipated O&M.

3.1.6 Low Concentration Nontracking System

The typical LCNT system consists of a CPC (compound parabolic collector) field, sensible heat thermocline storage, and central Rankine steam turbine. Dowtherm A is used as the receiver coolant, as heat transfer fluid between the receivers and thermal storage, and as a thermal storage medium. A system flow schematic drawing is presented in Fig. 3-10.

The collector field consists of nontracking five-power CPCs (Fig. 3-11), where tilt is adjusted twelve times annually. The concentrator surface is Alglass, with a thickness of 0.025 mm, over a polished metal reflector.

The receiver is a linear tube coated with a selective surface absorber and surrounded by an evacuated tube with an antireflective coating.

Thermal storage is a dual media sensible heat thermocline of Dowtherm A and rocks. The storage tanks are externally insulated.

3.1.7 Line-Focus Distributed Receiver—Tracking Collector System

The representative LFDR-TC system consists of a parabolic trough field, sensible heat thermocline storage, and central Rankine steam turbine. Dowtherm A is used as the receiver coolant, as heat transfer fluid between the receivers and thermal storage, and as a thermal storage medium. See Fig. 3-12.

The collector field consists of an array of single-axis tracking parabolic troughs (Fig. 3-13) aligned to track about a north-south axis. Their reflective surface is back-silvered thin glass.

The receiver is a linear tube coated with a selective surface absorber and surrounded by an evacuated glass tube with an antireflective coating.

Thermal storage uses a dual media sensible heat thermocline of Dowtherm A and rocks. The storage tanks are externally insulated.

3.1.8 Line-Focus Distributed Receiver—Tracking Receiver System

The representative LFDR-TR system consists of a collector field, sensible heat thermocline storage, and central Rankine steam turbine. Dowtherm A is used as the receiver

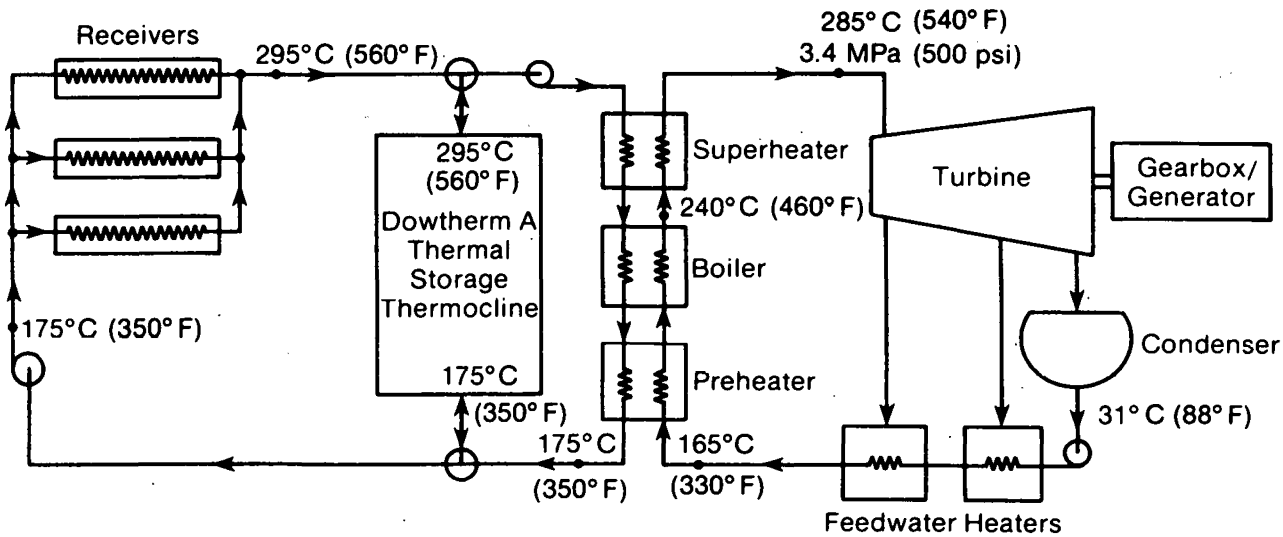

Figure 3-10. Low Concentration Non-Tracking (LCNT) System Flow Schematic Drawing

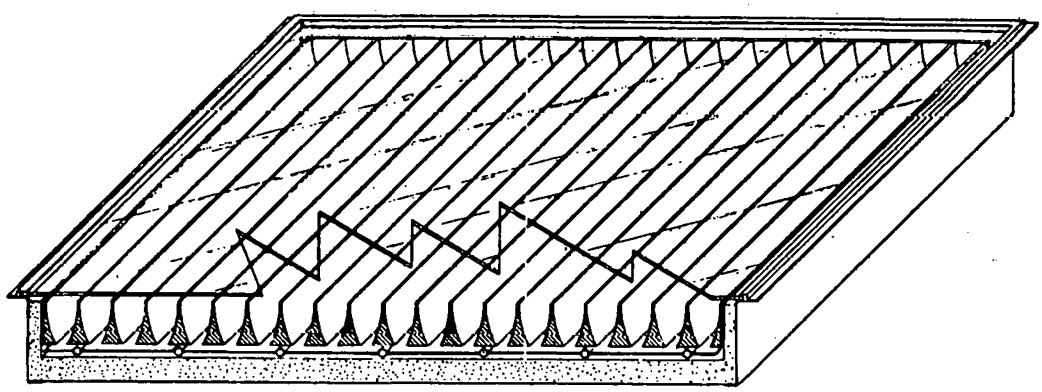

Figure 3-11. Low Concentration Non-Tracking (LCNT) Collector Module

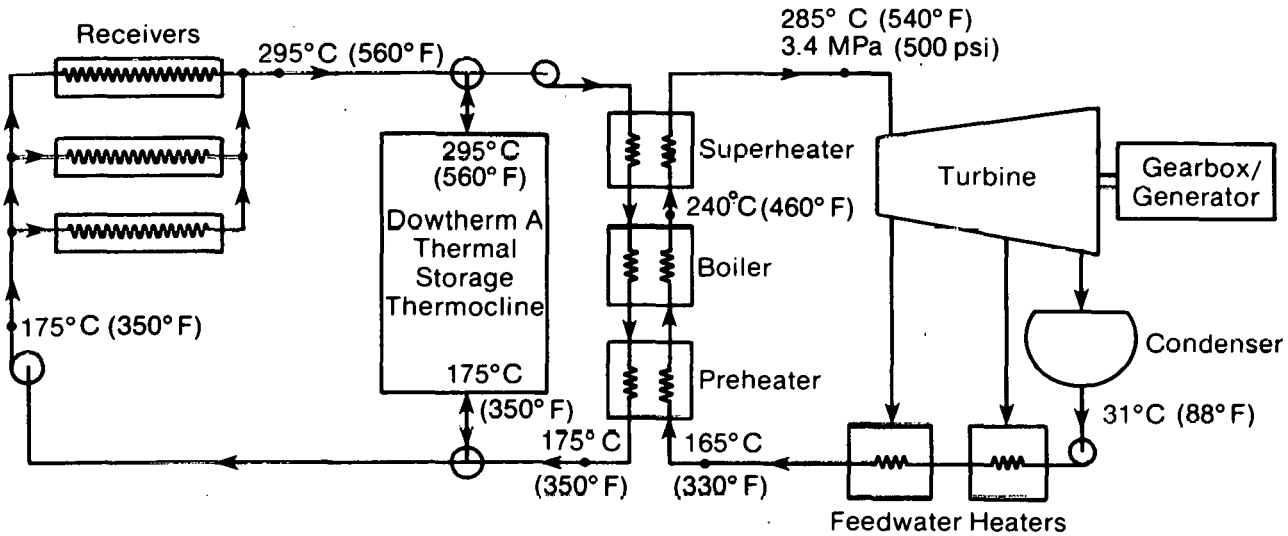

Figure 3-12. Line-Focus Distributed Receiver--Tracking Collector (LFDR-TC) System Flow Schematic Drawing

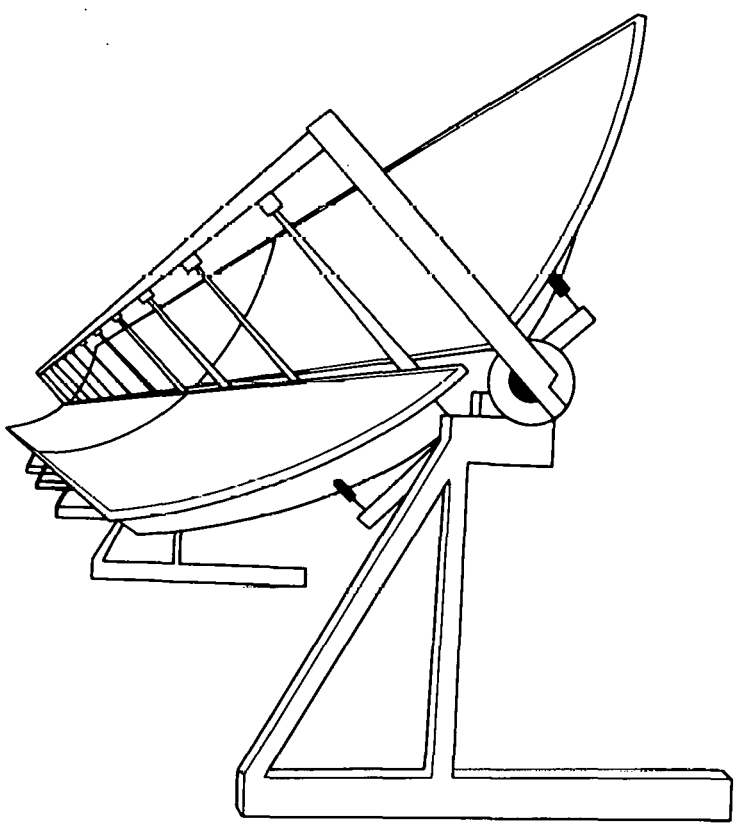

Figure 3-13. Line-Focus Distributed Receiver Tracking Collector (LFDR-TC)

coolant, as heat transfer fluid between the receiver and thermal storage, and as a thermal storage medium. Figure 3-14 gives a system flow schematic drawing.

The collector field consists of an array of stationary segmented troughs (Fig. 3-15) with receivers that track in the east-west axis. The collector substrate is concrete, although the technical feasibility of achieving adequate mirror pointing precision with a concrete substrate is questionable. The reflectors are strips of back-silvered glass bonded to the substrate steps.

The receiver is a linear cavity with secondary concentration. The secondary concentrator is a back-silvered thin glass (~1 mm, 0.40 in.) compound parabolic concentrator. The receiver has a glass cover, which is treated with an antireflective coating. The cavity absorber is coated with a selective surface.

Thermal storage is a dual media sensible heat thermocline of Dowtherm A and rocks. The storage tanks are externally insulated.

3.1.9 Line-Focus Central Receiver System

The LFCR system is an advanced salt system using a central Rankine steam turbine. Draw salt is used as the receiver coolant, as heat transfer fluid between the receiver and thermal storage, and as the storage medium. See Fig. 3-16.

The concentrator field consists of one-axis tracking heliostats (Fig. 3-17) arranged in a north field configuration (Fig. 3-18). There are small "butterfly" areas at each end of the heliostat rows to illuminate the full receiver for several hours of each day. The heliostat reflective surface is back-silvered thin glass.

The receiver is a linear cavity facing north. The cavity walls are coated with a selective surface. The receiver is supported on 60-m (200 ft) guyed steel towers that are spaced every 60 m (200 ft) in length.

Thermal storage is a sensible heat thermocline of molten draw salt. The storage tanks are lined with internal insulation to allow lower cost materials for their construction.

3.1.10 Fixed Mirror Distributed Focus System

The representative FMDF system is an advanced salt system. Hitec salt is employed as the receiver coolant, as heat transfer fluid between the receivers and thermal storage, and as the thermal storage medium. A central Rankine steam turbine is used for power conversion. A system flow schematic drawing is presented in Fig. 3-19.

The concentrator field consists of an array of large stationary hemispherical bowls (Fig. 3-20) tilted somewhat to the south. The concrete bowl support structure is lined with a reflective surface of back-silvered glass.

The receiver is a linear tube that tracks in two axes. The receiver surface is coated with a selective surface.

Thermal storage is a sensible heat thermocline of molten Hitec salt. The storage tanks are lined with internal insulation.

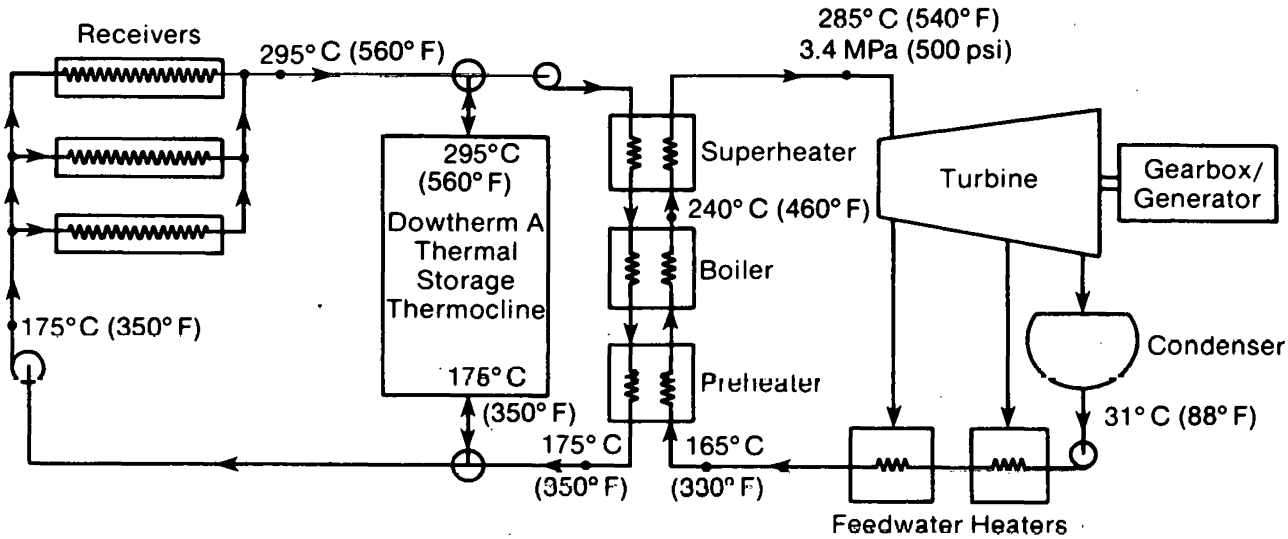

Figure 3-14. Line-Focus Distributed Receiver--Tracking Receiver (LFDR-TR) System Flow Schematic Drawing

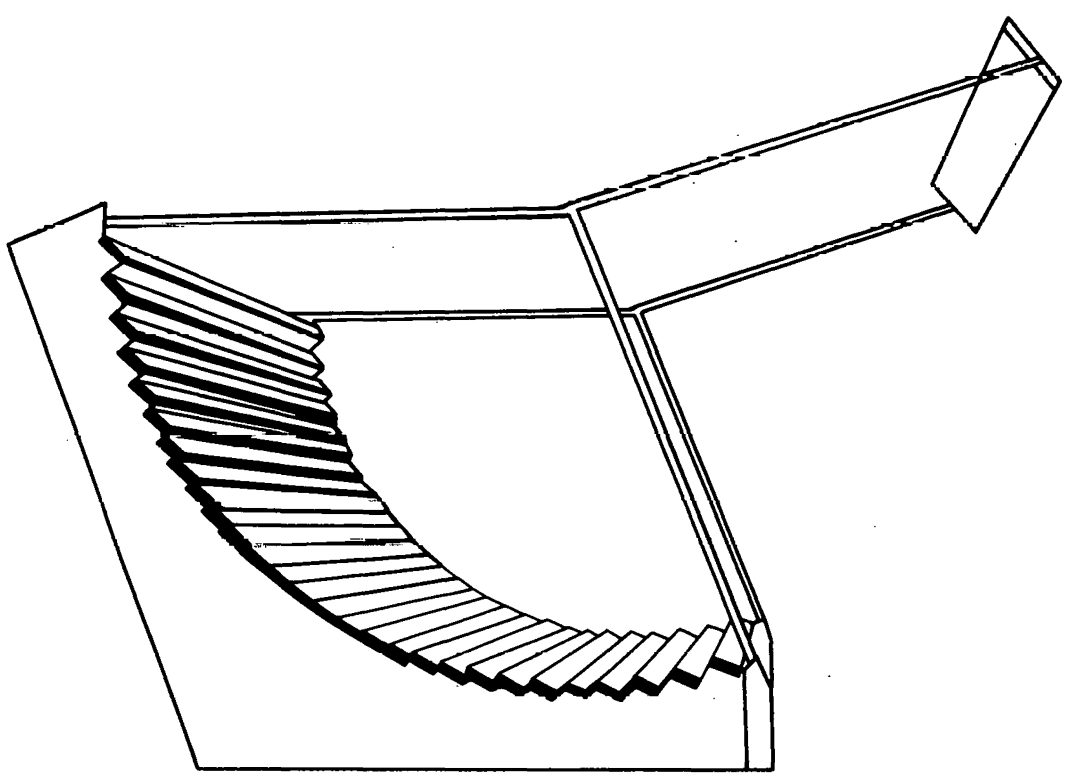

Figure 3-15. Line-Focus Distributed Receiver Tracking Receiver (LFDR-TR)

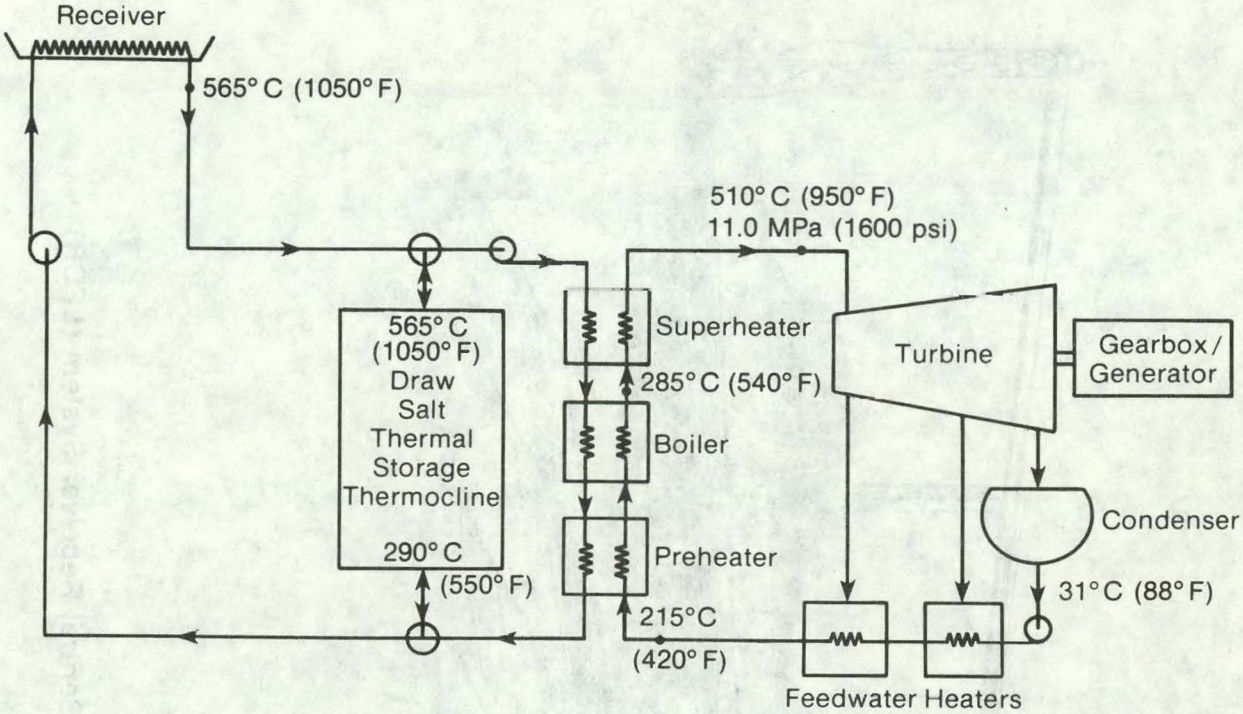

Figure 3-16. Line-Focus Central Receiver(LFCR) System Flow Schematic Drawing Receiver

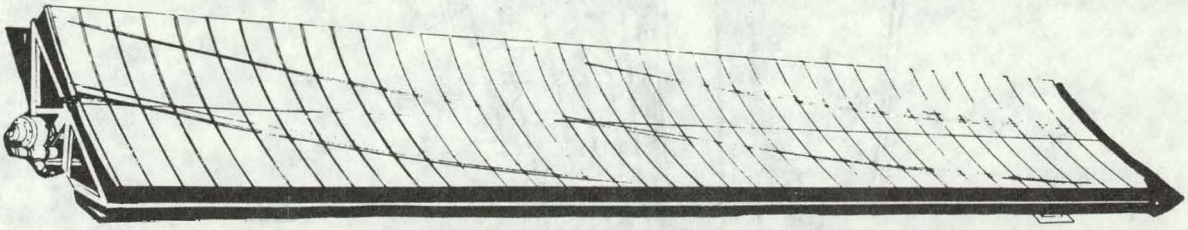

Figure 3-17. One-Axis Tracking Heliostat

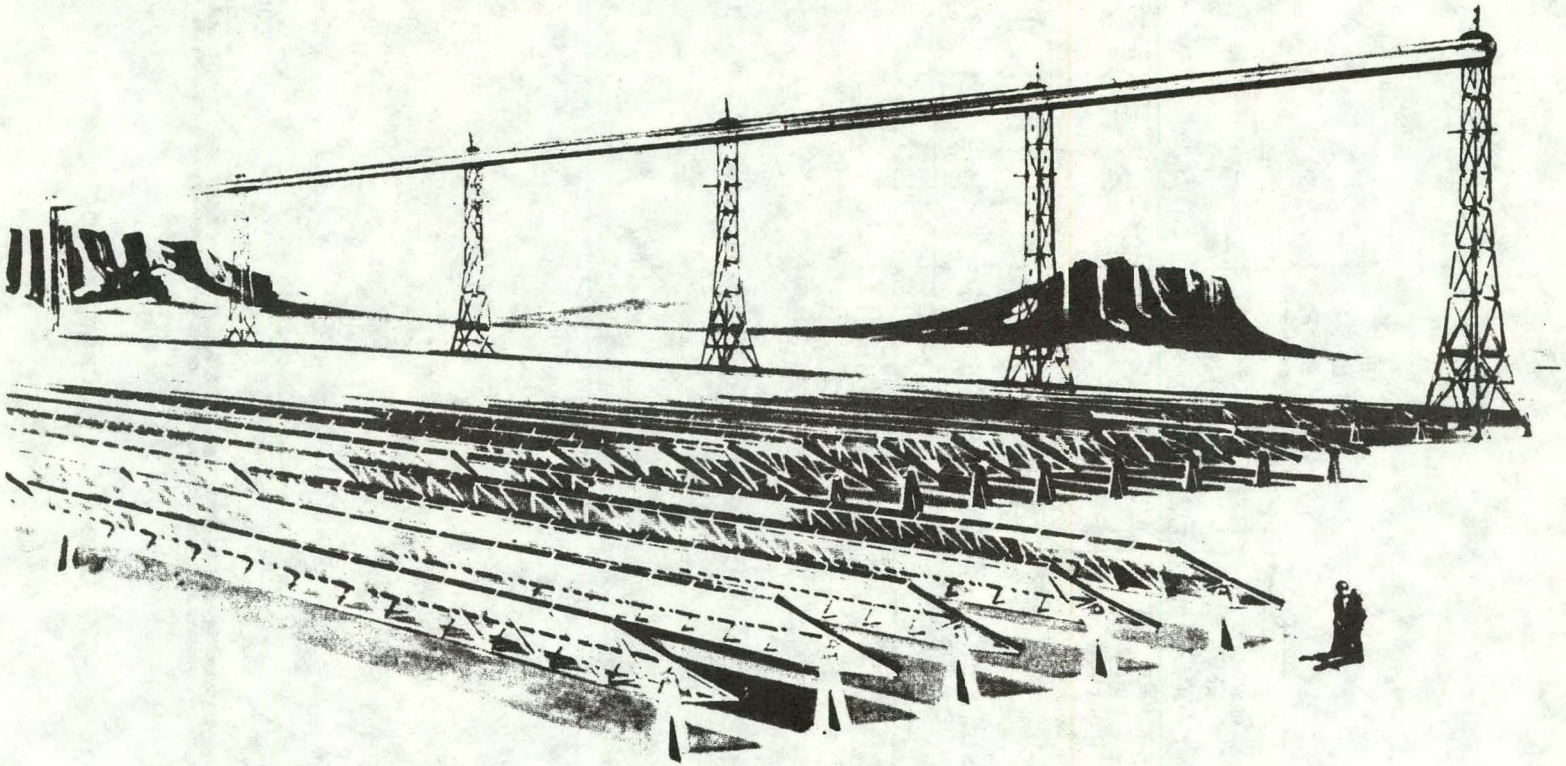

Figure 3-18. Line-Focus Central Receiver System (LFCR)

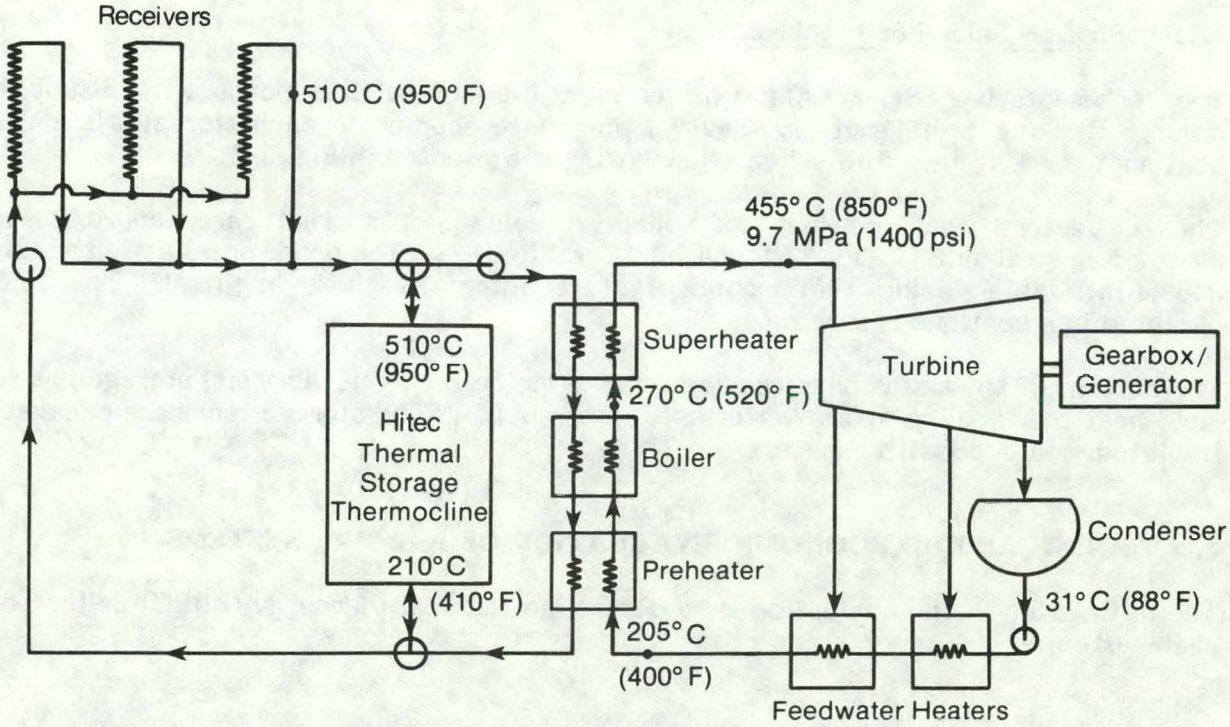

Figure 3-19. Fixed Mirror Distributed Focus (FMDF) System Flow Schematic Drawing

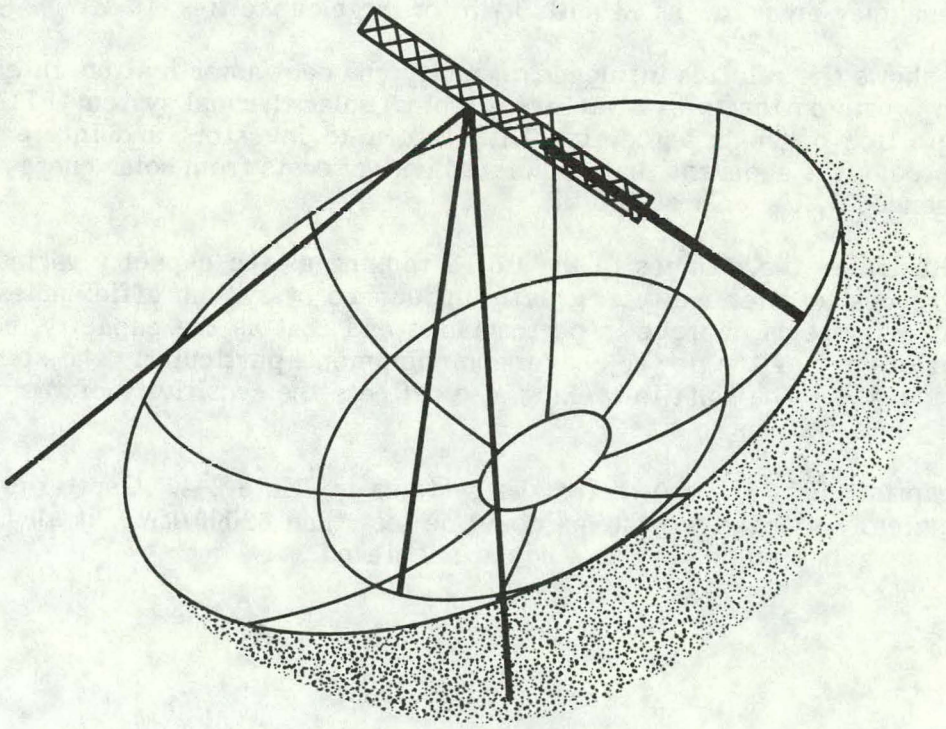

Figure 3-20. Fixed Mirror Distributed Focus (FMDF) Bowl

3.1.11 Shallow Solar Pond System

The representative SSP system consists of a field of saltless ponds with distributed organic Rankine cycle engines. Several ponds are coupled to each storage system and heat engine. A system flow schematic drawing is presented in Fig. 3-21.

The collector field consists of shallow solar ponds that are approximately 60 m x 5 m x 0.1 m (200 ft x 20 ft x 4 in). See Fig. 3-22. The ponds are plastic bags with double inflatable glazings that are manufactured integral with the bag itself. The field is operated in a continuous flow mode.

The bottom of the bag is blackened and serves as the receiver. Thermal storage is a sensible heat thermocline of the water used in the ponds. The storage tanks are excavated, insulated, and lined with plastic.

3.2 TECHNICAL AND ECONOMIC EVALUATION OF 1-10 MW_e SYSTEMS

The initial step in the evaluation is to determine the cost of energy ($\overline{BBEC}$) delivered by each system.

3.2.1 Results of Economic Analysis

Table 3-2 lists the projected $\overline{BBEC}$ of the 1-10 MW_e utility systems. Energy costs are shown for a no-storage case, for 0.4 and 0.7 capacity factors, and for the capacity factor that gives the optimum energy costs. If the technical and economic cost targets selected for the study are achieved by the mid-1990s, the cost of electricity from the more promising systems may be as low as 93 mills/kWh for large capacities (10 MW_e).

Figure 3-23 shows the relative influence of equity and debt amortization, interest, taxes, and recurring costs on the total $\overline{BBEC}$ for a typical solar thermal system (PFCR/R). The very large portion of costs associated with return to investors and interest on bonds should be noted. It is apparent that calculated energy costs from solar energy are significantly influenced by the cost of capital.

Table 3-3 illustrates the changes in the $\overline{BBEC}$ ranking as the capacity varies from 1 to 10 MW_e. The cost of electricity is greatly influenced by system efficiencies. Centralized generation systems improve in performance and cost as the capacity increases because the efficiency of the power conversion equipment, particularly the steam turbine, increases with size. The shift in ranking also reflects the sensitivity of the optical performance of some systems to size.

Projected capital costs are shown for the systems in Table 3-4. Capital costs for the more economically attractive systems could be less than \$2000/kW_e, if all the cost and performance targets assumed in this study are achieved.

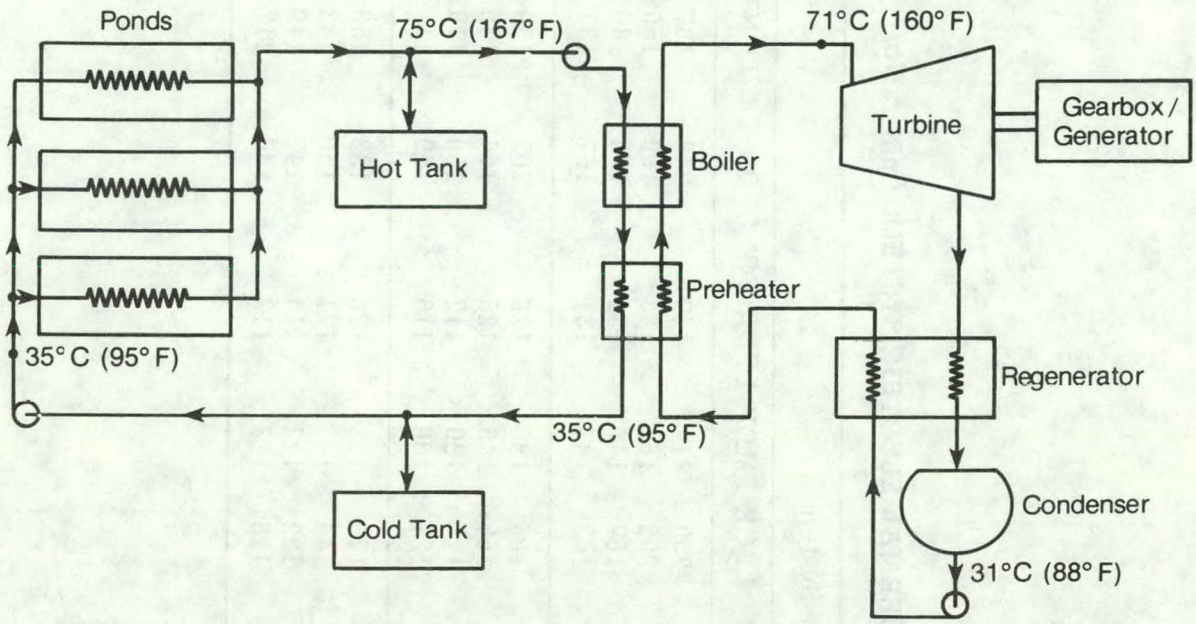

Figure 3-21. Shallow Solar Ponds (SSP) System Flow Schematic Drawing

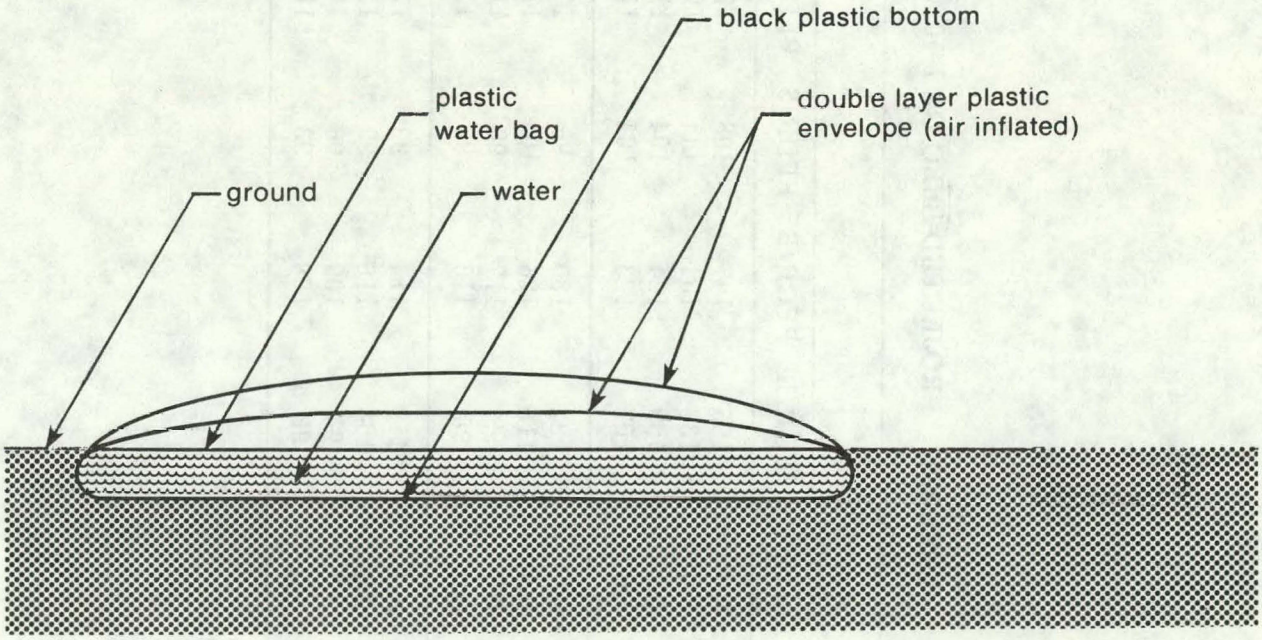

Figure 3-22. Shallow Solar Pond (SSP)

Table 3-2. PROJECTED $\overline{BBEC}$ OF 1-10 MW_e SOLAR THERMAL ELECTRIC SYSTEMS (mills/kWh)

Rated Capacity (MW_e)	Capacity Factor	Generic System										
		PFCR/R	PFCR/B	PFDR/S	PFDR/B	PFDR/CR	LFCR	FMDF	LFDR-TC	LFDR-TR	LCNT	SSP
1	N/S	156	147	108	123	147	250	214	149	242	187	452
	0.4	136	151	111	125	137	202	169	143	190	155	1781
	0.7	109	124	104	118	115	167	147	131	170	136	N/A
	opt	107	123	101	117	106	163	147	131	167	131	452
5	N/S	132	130	96	111	131	186	180	126	202	159	401
	0.4	115	126	101	115	123	153	146	126	164	135	1766
	0.7	99	117	98	112	103	125	130	117	150	119	N/A
	opt	98	116	95	111	101	121	130	116	149	117	401
10	N/S	119	114	93	108	129	175	168	120	193	153	392
	0.4	106	116	99	113	121	144	143	121	159	133	1763
	0.7	94	109	96	111	104	122	123	114	147	119	N/A
	opt	93	108	93	108	101	116	123	113	146	117	392

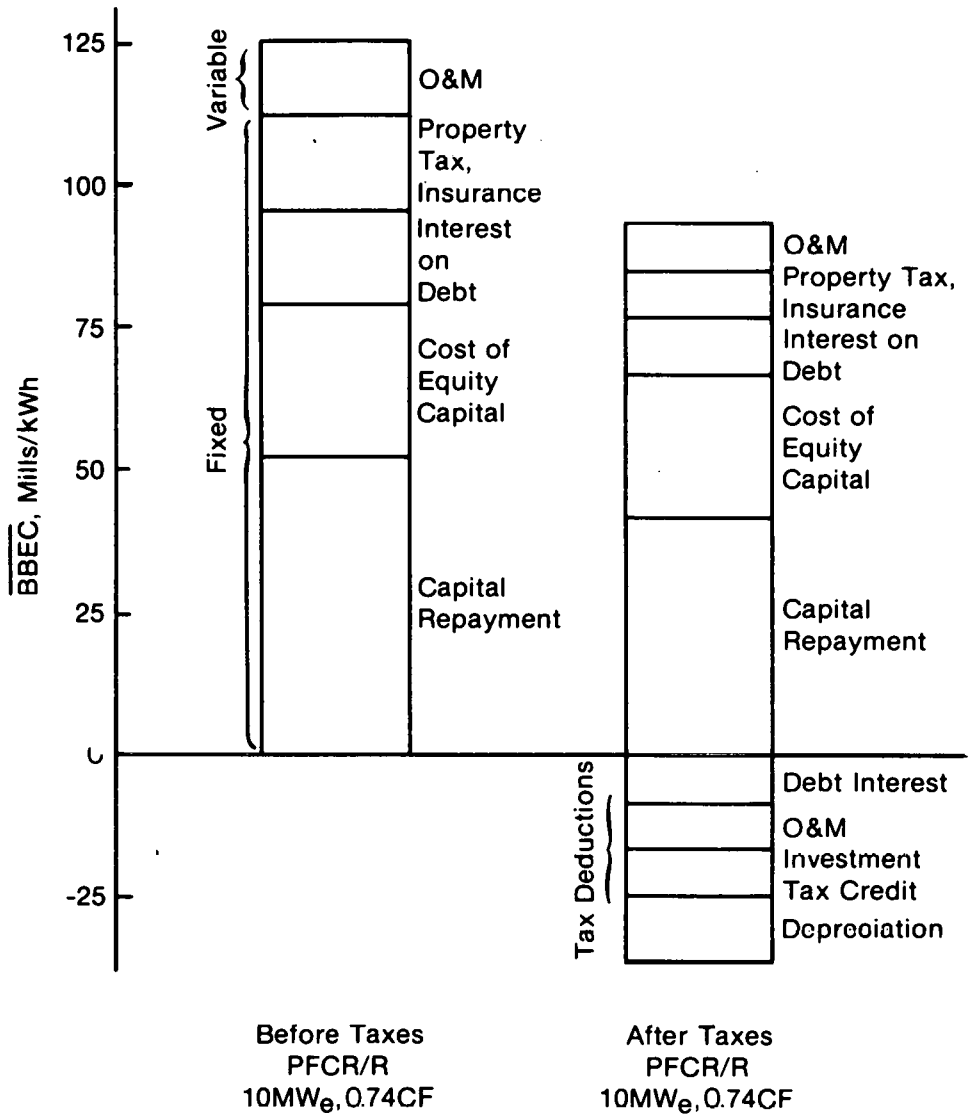

Figure 3-23. Breakdown of $\overline{BBEC}$ into Financing Components

Table 3-3. VARIATION IN $\overline{BBEC}$ RANKING OF 1-10 MW_e SYSTEMS WITH CAPACITY

1 MW_e	5 MW_e	10 MW_e
PFDR/S	PFDR/S	PFDR/S
PFDR/CR	PFCR/R	PFCR/R
PFCR/R	PFDR/CR	PFDR/CR
PFDR/B	PFDR/B	PFDR/B
PFCR/B	PFCR/B	PFCR/B
LFDR-TC	LFDR-TC	LFDR-TC
LCNT	LCNT	LFCR
FMDF	LFCR	LCNT
LFCR	FMDF	FMDF
LFDR-TR	LFDR-TR	LFDR-TR
SSP	SSP	SSP

Figure 3-24 and Figure 3-25 illustrate the variations in energy cost with capacity factor. For a given capacity, these trends show that plants with central generation and thermal storage become more cost effective as capacity factor increases. Analysis indicates that energy costs will rise dramatically as a capacity factor of 1.0 is approached. However, capacity factors greater than 0.8 were not considered in the study. The trends evidenced by the behavior of energy costs for the PFDR/S and PFDR/B systems lead to significantly different conclusions for this type of system where generation is distributed among many small units and where electrical storage is used.

First, note that for a given plant capacity, $\overline{BBEC}$ rises as the first increment of storage is added, reflecting the addition of hardware related to the charging and discharging of storage. The $\overline{BBEC}$ drops as more storage capacity is added and the charge/discharge hardware is better used. At high capacity factors, $\overline{BBEC}$ begins to rise again as the required collector area rapidly increases to make use of insolation in early and late hours of the day.

The second trend is that the minimum $\overline{BBEC}$ is obtained at high capacity factor for low capacities and at low capacity factor for high capacities. At low capacities, the balance of plant costs are a large part of the total cost of the system. It is desirable, therefore, to add storage capacity to increase the amount of energy delivered by the plant over which the balance of plant costs can be amortized. At higher capacities, the balance of plant costs are a smaller fraction of total system cost so that large amounts of electrical storage are not as advantageous. The crossover in this trend is within the 1-10 MW_e range. For the PFDR/S system at 1 MW_e the $\overline{BBEC}$ optimizes at 0.73 capacity factor. At 5 MW_e the no-storage case and the 0.73 capacity factor case produce the same $\overline{BBEC}$. At 10 MW_e the PFDR/S system optimizes at the no-storage case.

These trends assume that the value of electricity available from storage is the same as that generated directly by a plant during sunlight hours, although this is seldom, if ever, true in today's utility world. The value of storage, as opposed to the cost, will depend on the individual users and their load profiles.

Table 3-4. PROJECTED CAPITAL COSTS OF 1-10 MW_e UTILITY SYSTEMS ($/$kW_e$)

Rated Capacity (MW_e)	Capacity Factor	Generic System										
		PFDR/S	PFDR/B	PFDR/CR	PFCR/R	PFCR/B	LFCR	LFDR-TC	LFDR-TR	FMDF	LCNT	SSP
1	N/S	1760	2040	2600	2610	2280	3670	2540	2950	3000	2140	2670
	0.4	2240	2560	2700	2790	2990	4300	2980	3960	3460	3140	38,400
	0.7	3570	4260	3900	3970	4510	6220	4710	6300	5320	4890	—
	opt	3660	4340	4300	4310	4660	6740	4610	6680	5730	5500	2670
5	N/S	1520	1710	2240	2040	1800	2800	2100	2400	2340	1830	2340
	0.4	2000	2260	2420	2300	2540	3140	2520	3380	2940	2660	38,000
	0.7	3340	4020	3520	3580	4280	4540	4260	5460	4760	4400	—
	opt	3420	1740	4000	3760	4100	4960	4080	6040	4600	4800	2340
10	N/S	1460	1700	2170	1730	1540	2660	1990	2300	2210	1670	2280
	0.4	1950	2270	2370	2090	2300	3000	2410	3280	2720	2710	38,000
	0.7	3280	3960	3490	3320	3920	4440	4090	5570	4420	4300	—
	opt	1460	1750	3950	3470	3640	4830	3890	5930	4810	4720	2280

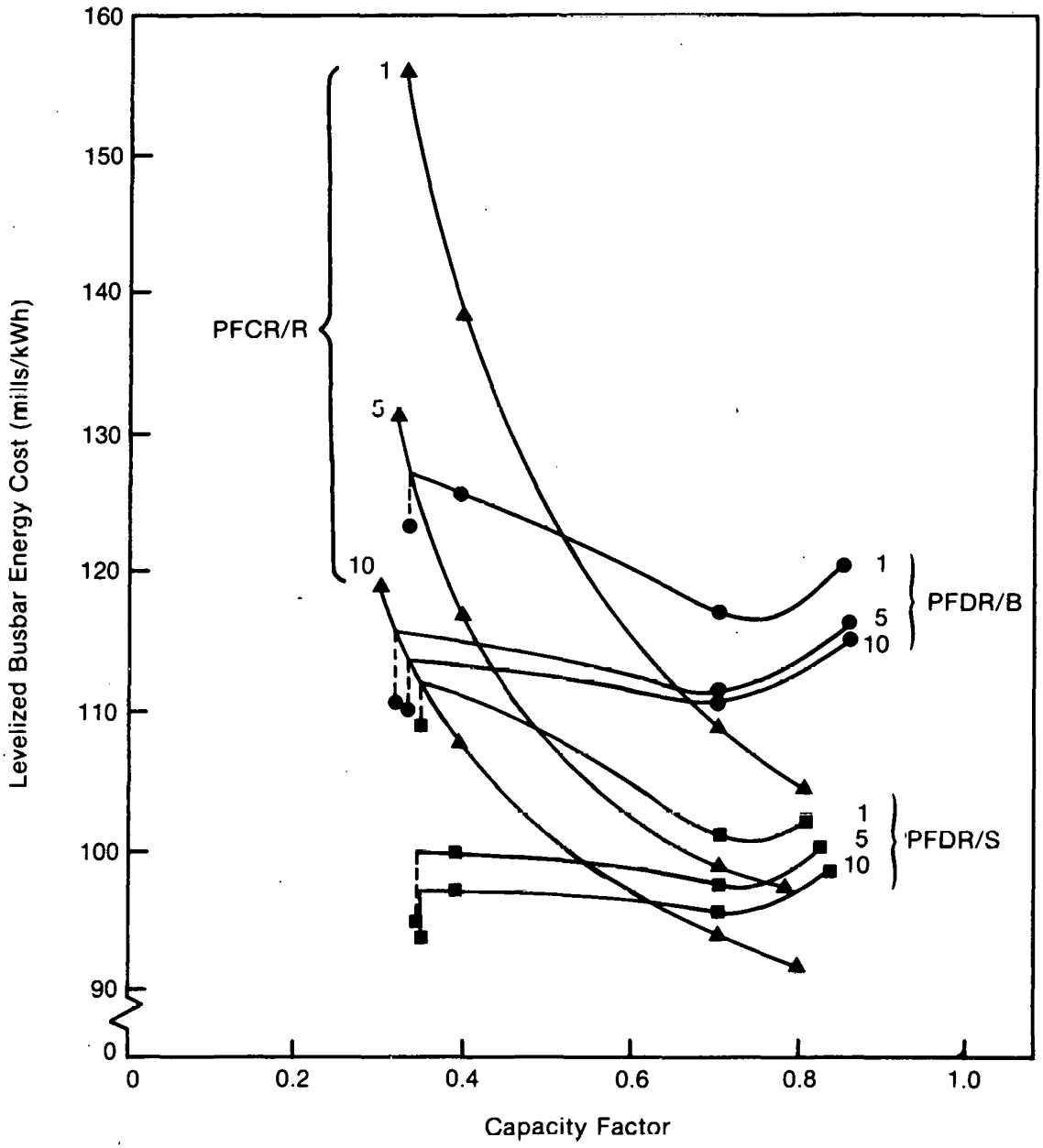

Figure 3-24. Cost of Energy (mills/kWh) as a Function of Capacity and Capacity Factor

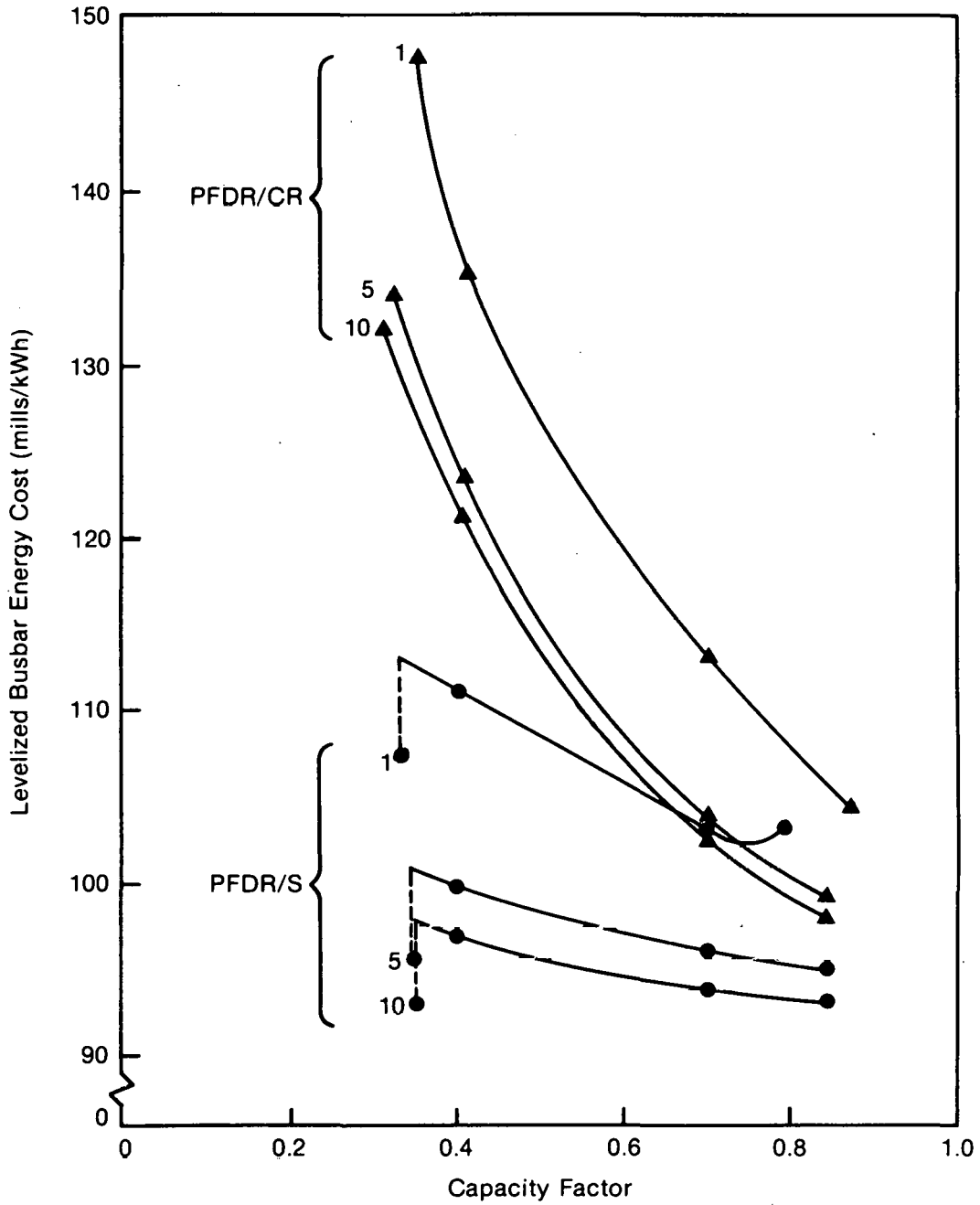

Figure 3-25. Cost of Energy (mills/kWh) as a Function of Capacity and Capacity Factor for PFDR/CR and PFDR/S Systems

More detailed descriptions including summaries of subsystem cost and performance data are included in Volume II.

3.2.2 Sensitivity Analyses

Changes in utility financing and economic conditions since 1976 require that other economic scenarios be tested. Four scenarios are analyzed for the PFDR/S system at $10MW_e$ and 0.35 (no storage) capacity factor. The effect of the change in ground rules will be approximately the same for other systems and, therefore, will not affect the ranking.

Table 3-5 gives the economic scenarios chosen and the baseline case for comparison. Case A is for an investor-owned utility showing increased market cost of capital and interest (predominantly caused by inflation, restricted capital formation, and risk premiums for solar), increased inflation, and explicit accounting for tax preference and for accelerated depreciation. Case B is for a public utility financed entirely through debt issues at 8%. Tax preferences do not apply because public utilities do not pay income taxes. Cases C and D show the effect of heavy debt financing at low interest (perhaps a government loan guarantee program) on both private and public utility costs. The significant reduction in $\overline{BBEC}$ reflects the advantages of heavily leveraged financing and low discount rates on solar economics.* Although the reductions shown are encouraging, one should recognize that Cases A and B represent the realistic requirements of utilities today.

Sensitivity runs were performed for the PFCR/R and PFDR/S systems at $5MW_e$ and 0.4 capacity factor to determine the combined effects of changes in predicted performance and economic assumptions. The nominal $\overline{BBEC}$ for the PFDR/S system at those conditions was 101 mills/kWh. With an improved engine efficiency (48%) and lower concentrator cost ($\$75/m^2$ installed), the $\overline{BBEC}$ dropped to 89 mills/kWh, as shown in Table 3-6. Both the higher engine efficiency and lower concentrator costs might be achieved from a vigorous R&D program. Further reduction of the $\overline{BBEC}$ to 76 mills/kWh resulted from elimination of the gound rule requiring that the plant never deliver more than its rating; this allowed credit to be given for any electricity produced above plant rating. Using economic scenario D lowered the $\overline{BBEC}$ to 54 mills/kWh. Table 3-7 shows the results of similar sensitivity analyses for the PFCR/R system that yielded $\overline{BBEC}$ of 50 mills/kWh.

*The reader is cautioned to remember that leveraged financing analysis can make poor investments look good and marginal investments look better. Debt leveraging also entails a great deal of actual risk, inasmuch as the investor continues to be liable for loan payments even if the investment fails. Such lender recourse can make seemingly attractive investments the source of negative rates of return if system performance does not live up to expectations. For this reason leveraged economic analysis is rarely used in comparing capital alternatives. We present it here only for illustrative purposes and recommend that these results not be considered as representative of the real cost of power from solar systems.

Table 3-5. ECONOMIC SCENARIOS AND RESULTANT BUSBAR ENERGY COSTS FOR ALTERNATIVE COSTS (PFDR/S, 10 MW_e, 0.25 CF)

Scenario	τ	k_d	D/V	k_c	C/V	k_p	P/V	g	β_1	β_2	g_c	g_{om}	ITC	DPF	$\overline{BBEC}$
Baseline	0.40	0.08	0.50	0.112	0.50	0.10	0	0.06	0.02	0.0225	0.06	0.07	0	SL	93
Case A	0.50	0.09	0.53	0.150	0.35	0.10	0.12	0.08	0.02	0.0225	0.08	0.08	0.07	SYD	99
Case B	0	0.08	1.0	0.150	0	0.10	0	0.08	0.02	0.0225	0.08	0.08	0	—	76
Case C	0.50	0.06	0.75	0.150	0.17	0.10	0.08	0.08	0.02	0.0225	0.08	0.08	0.07	SYD	78
Case D	0	0.06	1.0	0.150	0	0.10	0	0.08	0.02	0.0225	0.08	0.08	0	—	71

Note: All Cases Assume a 30-Year System Lifetime.

where τ = Effective Income Tax Rate
k_d = Annual Rate of Return on Debt
D/V = Ratio of Debt to Total Capitalization
k_c = Annual Rate of Return on Common Stock
C/V = Ratio of Common Stock to Total Capitalization
k_p = Annual Rate of Return on Preferred Stock
P/V = Ratio of Preferred Stock to Total Capitalization
g = Rate of General Inflation
β_1 = Annual "Other Taxes" as a Fraction of Capitalization
β_2 = Annual Insurance Premiums as a Fraction of Capitalization
g_c = Escalation Rate for Capital Costs
g_{om} = Escalation Rate for Operating Costs
ITC = Investment Tax Credit
DPF = Method of Depreciation
SL = Straight Line
SYD = Sum-of-the-Years' Digits

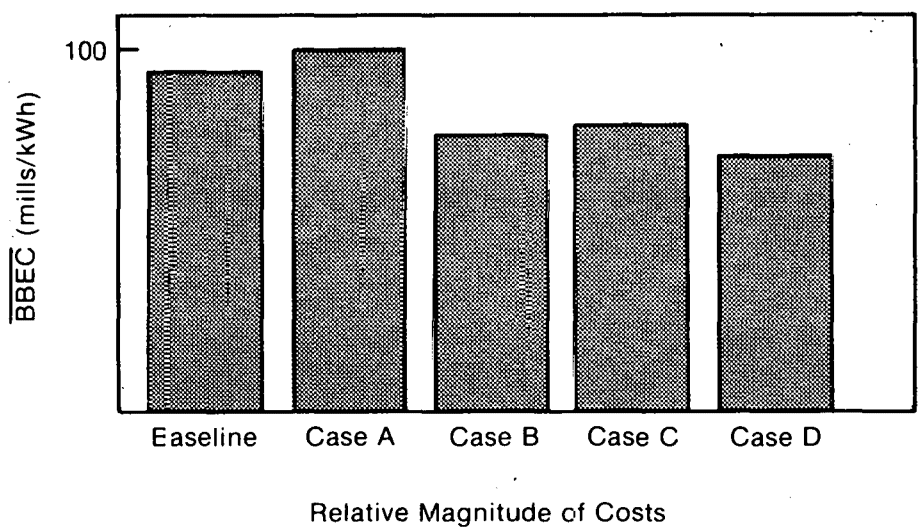

Table 3-6. RESULTS OF SENSITIVITY ANALYSES, FOR PFDR/S SYSTEM ($5MW_e$, 0.4 CAPACITY FACTOR)

Concentrator Cost, $\$/m^2$	100	75	75	75
Engine Efficiency	0.42	0.48	0.48	0.48
Economic Scenario	baseline	baseline	baseline	D
Waste "Excess" Electricity	Yes	Yes	No	No
$\overline{BBEC}$, mills/kWh	101	89	76	54

Table 3-7. RESULTS OF SENSITIVITY ANALYSES, FOR PFCR/R SYSTEM ($5MW_e$, 0.4 CAPACITY FACTOR)

Concentrator Cost, $\$/m^2$	75	40	40
Engine Efficiency	0.34	0.40	0.40
Economic Scenario	baseline	baseline	D
$\overline{BBEC}$, mills/kWh	115	74	50

3.2.3 The Effects of Inflation

Levelized busbar energy costs ($\overline{BBEC}$) represent the constant cost of producing power from a solar thermal electric power system in current dollars over the lifetime of the system. Thus, $\overline{BBEC}$ resembles a home mortgage payment that remains a constant numerical amount. The real cost of that payment in dollars of constant purchasing power decreases over the life of the system because of inflation. To account for this loss of real value, $\overline{BBEC}$ overcharges for solar electric power in the early years and undercharges in later years. A distribution of annual energy costs that has the same present value as $\overline{BBEC}$ but is calculated in terms of real dollars is shown in Fig. 3-26. Assuming an inflation rate of 8%, the real busbar energy cost at the beginning of year one ($BBEC_0$) is only 49.5% of the levelized charge. The two are equal in year thirteen, and from then on the time-dependent BBEC(t) exceeds $\overline{BBEC}$.

Figure 3-26 is important because one needs to recognize the meaning of $\overline{BBEC}$ and the equivalent distribution of BBEC(t) in real terms, showing the effect of inflation. Second, caution must be applied in comparing solar and conventional alternatives. If the unit cost of producing power from an oil-fired plant using first year fuel costs, fixed costs, etc., is calculated, the solar cost for comparison is $BBEC_0$, not $\overline{BBEC}$. This compares costs at a common point in time without considering escalation and inflation. The proper cost comparison with solar levelized energy cost, $\overline{BBEC}$, is the 30-year levelized cost of the conventional alternative under the same scenario. In many cases, fuel cost escalation may make the levelized cost of fossil-fueled alternatives over plant lifetime substantially greater than currently perceived costs.

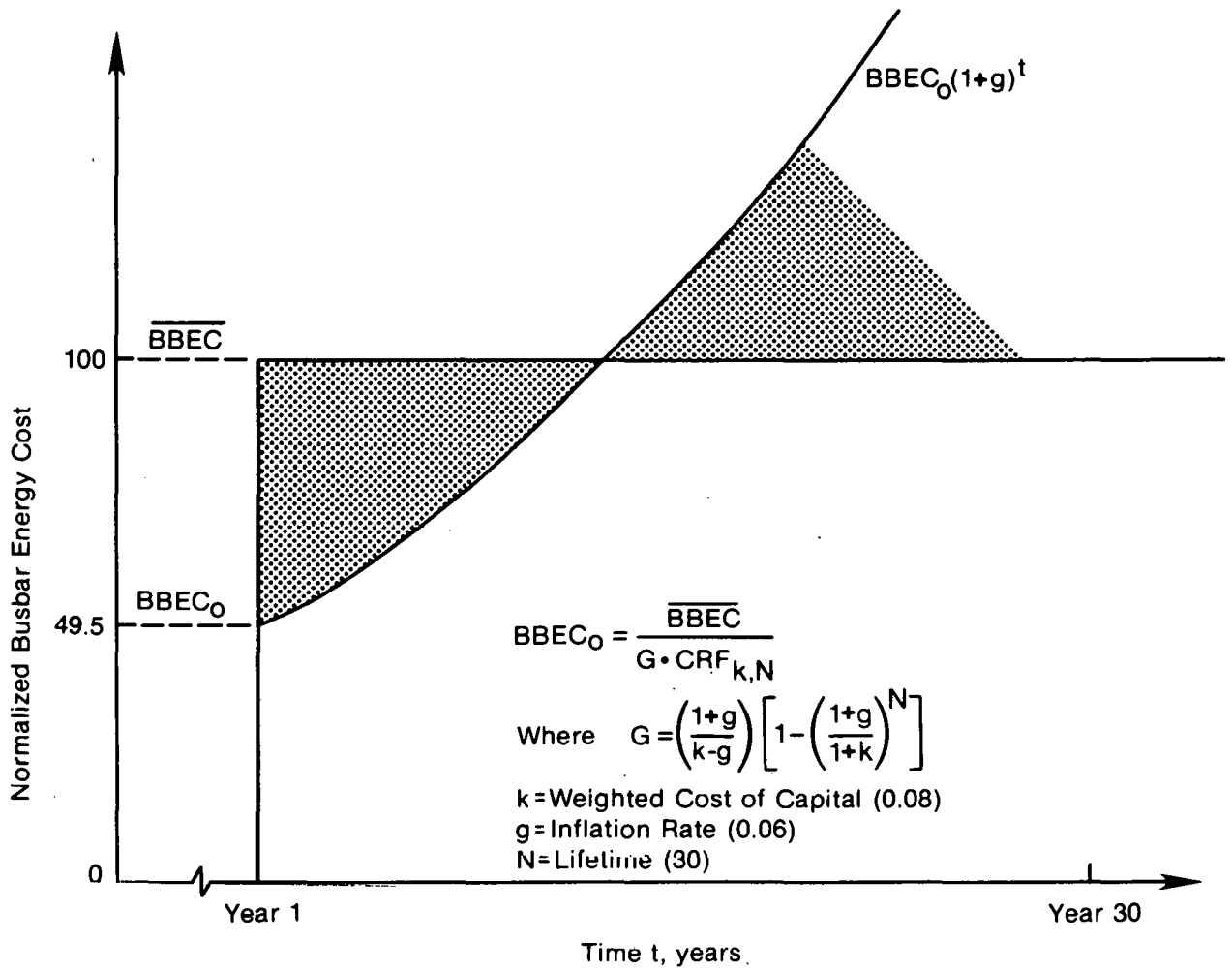

Figure 3-26. Difference between Levelized Energy Costs in Nominal and Real Dollar Terms (baseline economic scenario)

3.3 SUMMARY OF MADA RANKING RESULTS (1-10 MW_e)

The ranking of small solar thermal electric power systems can be analyzed by decision analysis. This study adopted a formal method of decision analysis to help interpret the technical results and to incorporate the opinions and concerns of potential users on many issues. This study constructs a model of the users' values to translate information from the system model created by the study team into decisions about the relative ranking of power system options.

Today there are many formal methods of decision analysis, but few can cope with the difficult issues of a multicriteria decision problem. For example, capital cost will significantly affect the comparative ranking of solar power system options, but the design capacity factor and levelized operating costs will also influence a ranking decision. The extent to which these attributes affect a final decision can be measured by multiattribute decision analysis. A flexible and logical method developed from the technique of multiattribute decision analysis was used to formulate the value model in this study. As described in Appendix C, this method simultaneously considers many criteria in the decision process, such as cost, performance, reliability, environmental impact, and commercial potential. The method can test directly the effects of uncertainty in both the system model and the value model. By interviewing decision makers from the power industry and the R&D sector according to this prescribed method, input data is obtained that allows later simulation of the individual's decision process.

The purpose of the analysis is to assign consistently a numerical preference score, with a value between 0 and 1.0, to each small power system option for each different decision maker. This preference score, or total utility, is calculated by adding the preference scores (utilities) for the system option on each of seven criteria together with appropriate weighting factors. To avoid confusion, "preference score" will be used here instead of the more formal term "utility" in referring to the relative value assigned by a decision maker to the performance of system options on various criteria. In this report, "utility" will then only refer to corporate entities in the electric power industry.

The study reflects the perspective of eventual users of small solar thermal electric power systems. Although electric utility applications were the focus in this work, small power systems can also be considered for applications to community-scale, self-contained power units, remote applications, or international markets. To contrast the views of electric power industry representatives, interviews with personnel representing diverse opinions in the research and development sector were also conducted. These samples allow us to compare the preferences of the utilities with those of research engineers who have traditionally been influential in programmatic R&D decisions.

The selection of the criteria and attributes upon which the ranking decision is based and for which input data were collected in interviews is an important step in constructing the value model (see Appendix D). The problem structure selected, shown in Fig. 3-27, includes the seven attributes selected, which are capital cost, O&M, capacity factor, environmental impact, relative safety, R&D expenditure, and applicability. The attributes are shown in relation to the objectives and subobjectives of this decision problem.

These seven attributes were explored in depth with each decision maker interviewed. The results of those discussions, including the relative weighting of the attributes and the qualitative statements about them, are described in Appendix E. Thirty individual interviews were conducted, including those with representatives from several different types of electric utilities:

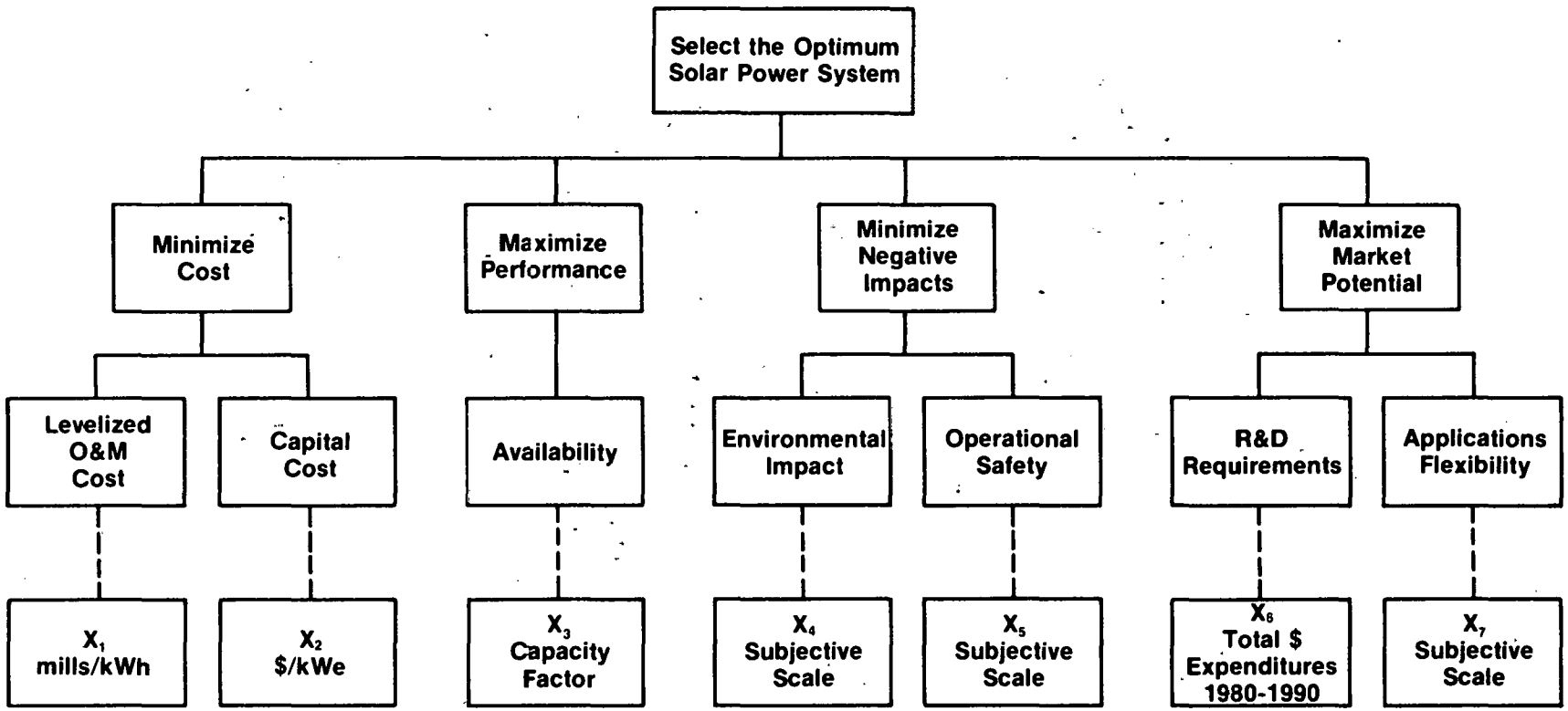

Figure 3-27. Selected Problem Structure

- Large investor-owned (~15,000 MW_e),
- Medium-sized investor-owned (~2,000 MW_e),
- Public utility (~1500 MW_e),
- Municipal utility (~300 MW_e), and
- Rural electric cooperative.

Interviews were also conducted with utility consultants, public utility commission members, and electric utility trade journal editors. A number of interviews with technical and nontechnical R&D staff were conducted to compare their views.

Section 3.3 presents the results of an evaluation and ranking of the alternative generic solar thermal electric power systems (1 to 10 MW_e) using MADA. Described in Appendix C, the MADA procedure produces an ordered ranking of each of the candidate generic systems for individual and synthesized "average" decision makers. This section is composed of four parts: (1) a summary of the conclusions based on these results, (2) definition of the participants and averaging procedures, (3) presentation of rankings produced using MADA, and (4) analysis of the sensitivity of these rankings to uncertainty of both system performance and cost data and of the decision analysis itself.

3.3.1. Conclusions of the Decision Analysis

The conclusions of the decision analysis are:

- Larger systems (10MW_e, then 5MW_e) rank higher than the smaller systems (1MW_e);
- The highest rated systems are PFCR/R and PFDR/S, the latter ranking high over the widest range of size and capacity factors;
- At other capacity factors, PFDR/CR, PFDR/B, PFCR/B, LFDR-TC, and LCNT systems rank high;
- Three systems ranking consistently low are FMDF, LFCR, and LFDR-TR;
- The shallow solar ponds are not acceptable to this sample of users;
- Rankings are consistent across wide ranges of user groups; and
- Rankings are consistent across a reasonably wide range of data uncertainty.

3.3.2 Participating Decision Makers

Of the 30 interviews conducted (see Appendix F), 24 interviews were selected for this analysis. Six of the original interviews were used as pretests of the questionnaire and were not included in the results. The 24 decision makers were classified into 5 groups. Three of the groups were created by selecting average decision makers in each respective category (see Table 3-8).

Table 3-8. COMPOSITION OF DECISION GROUPS

Category (See Appendix F)	Number of Interviewees				
	Group A	Group B	Group C	Group D	Group E
American Electric Power	3	1		3	3
Omaha Public Power District	2	1		2	2
Colorado Springs Public Utilities	1	1		1	1
Tri State Rural Electric	1	1		1	1
Public Service Company (Colorado)	1	1		1	1
Public Utility Commission	1	1		1	1
Consultants	2	1		2	2
SERI, Nontechnical Staff	3	1	3		3
SERI, Former Utility	2	1	2		2
SERI, Technical Staff	8	1	8		8
Total	24	10	13 → 1	11 → 1	24 → 1

1 AVG (Group D)

1 AVG (Group C)

1 AVG (Group E)

The five groups include:

- Group A - All 24 decision makers,
- Group B - 10 decision makers, each representing 1 of 10 user categories,
- Group C - 1 average R&D representative,
- Group D - 1 average utility representative, and
- Group E - 1 overall average decision maker.

Each of the 10 members of Group B were selected as typical of a representative category of users. Groups C through E are synthesized decision makers with attribute weights and utility curves that are the average of their respective samples. Rankings for each of the five groups were explored and a sensitivity analysis was conducted using the overall average decision maker (Group E) and the concensus poll of Group A. The method for arriving at concensus poll rankings is explained in Section 3.3.2.

3.3.3 System Rankings

Multiattribute decision analysis is applied to problems considering only one decision maker at a time. When a decision is based upon inputs from a committee of decision makers such as Groups A and B, the subjective influence of the decision analyst will be unavoidable because rigorous methods of combining individual inputs have not been developed [4]. However, two informal methods of combining individual inputs may be applied. The first method is similar to that used in college basketball and football polls. A variation of the Borda Count [4], this method scores each system according to its position in individual rankings; for example, 132 points for first, 131 points for second, etc.* The overall ranking is then determined by the sum of points over all decision makers; the largest sum ranks first, next largest second, etc. The second method of creating committee decisions considers the difference in the preference scores of each system for each participant by summing the preference scores for all decision makers and ranking the alternatives according to this sum. In this study the second method helped to define statistically significant differences in the rankings of two or more alternatives.

Alternatives that embodied attributes whose values were out of the range of acceptable values to the decision makers were unsuitable for a quantified ranking and were eliminated. For example, systems with installed capital costs exceeding $\$3400/kW_e$ were not considered. Use of eliminating screens has been illustrated in several previous applications of this methodology [5].

The results shown in Table 3-9 are ordered rankings of the best option (capacity/capacity factor combination) for each of the 11 systems considered. This table summarizes the rankings for Groups A through E together with ranking for Group A. The rankings are almost identical for the five groups. To illustrate the relative difference in rankings, the accompanying bar chart (Fig. 3-28) displays the relative preference scores for the average decision maker.

Presented in Table 3-10, the final overall ranking of the systems was determined from rankings of Table 3-9 and particularly emphasizes the utility decision makers (Group D). In the case of a virtual tie, qualitative concerns and preferences of the utility decision makers were incorporated; e.g., a single central receiver whose operating temperatures were similar to current practice is preferred to many other concepts, etc.

The plant size and capacity factor combinations ranking the highest for each concept are shown in Table 3-11. With few exceptions, the 10 MW_e plants with the intermediate capacity factors were ranked highest for each system concept.

As noted in Table 3-11, the overall ranking always included a 10 MW_e system as one of the best options. To gain a perspective on the effect of capacity on system ranking, a separate ranking was constructed for the 1 and 5 MW_e sizes. Table 3-12 shows the variation in ranking by size. The major shifts occur between the 5 and 10 MW_e rankings. The only discernible trends in these variations occur because:

---

*The number of points to be awarded for first place is equal to the total number of items to be scored. In this case, the total number of individual system variations to be ranked is: (11 generic systems) x (3 capacities) x (4 capacity factors) = 132. Hence, 132 points is awarded for first place, 133-n for nth place.

Table 3-9. BEST OVERALL OPTION SYSTEM RANKINGS

Rank	Group A (All)		Group B (10)	Group C (Overall Average)	Group D (Utility Average)	Group E (R&D Average)
	Poll	Average Utility	User Category Representatives			
1	PFDR/S	PFCR/R	PFDR/S	PFCR/R	PFCR/R	PFCR/R
2	PFCR/R	PFDR/S	PFCR/R	PFDR/S	PFDR/S	PFDR/S
3	PFDR/CR	PFDR/CR	PFDR/CR	PFDR/CR	PFDR/CR	PFDR/B
4	PFDR/B	PFCR/B	PFCR/B	PFDR/B	PFDR/B	LFDR-TC
5	* LFDR-TC	PFDR/B	LFDR-TC	PFCR/B	PFCR/B	PFDR/CR
6	PFCR/B	LFDR-TC	PFDR/B	LFDR-TC	LFDR-TC	PFCR/B
7	LCNT	LCNT	LCNT	LCNT	LCNT	LCNT
8	LFDR-TR	LFDR-TR	LFDR-TR	FMDF	LFDR-TR	LFDR-TR
9	FMDF	FMDF	FMDF	LFDR-TR	FMDF	FMDF
10	LFCR	LFCR	LFCR	LFCR	LFCR	LFCR
11	SSP	SSP	SSP	SSP	SSP	SSP

*Indicates virtual tie.

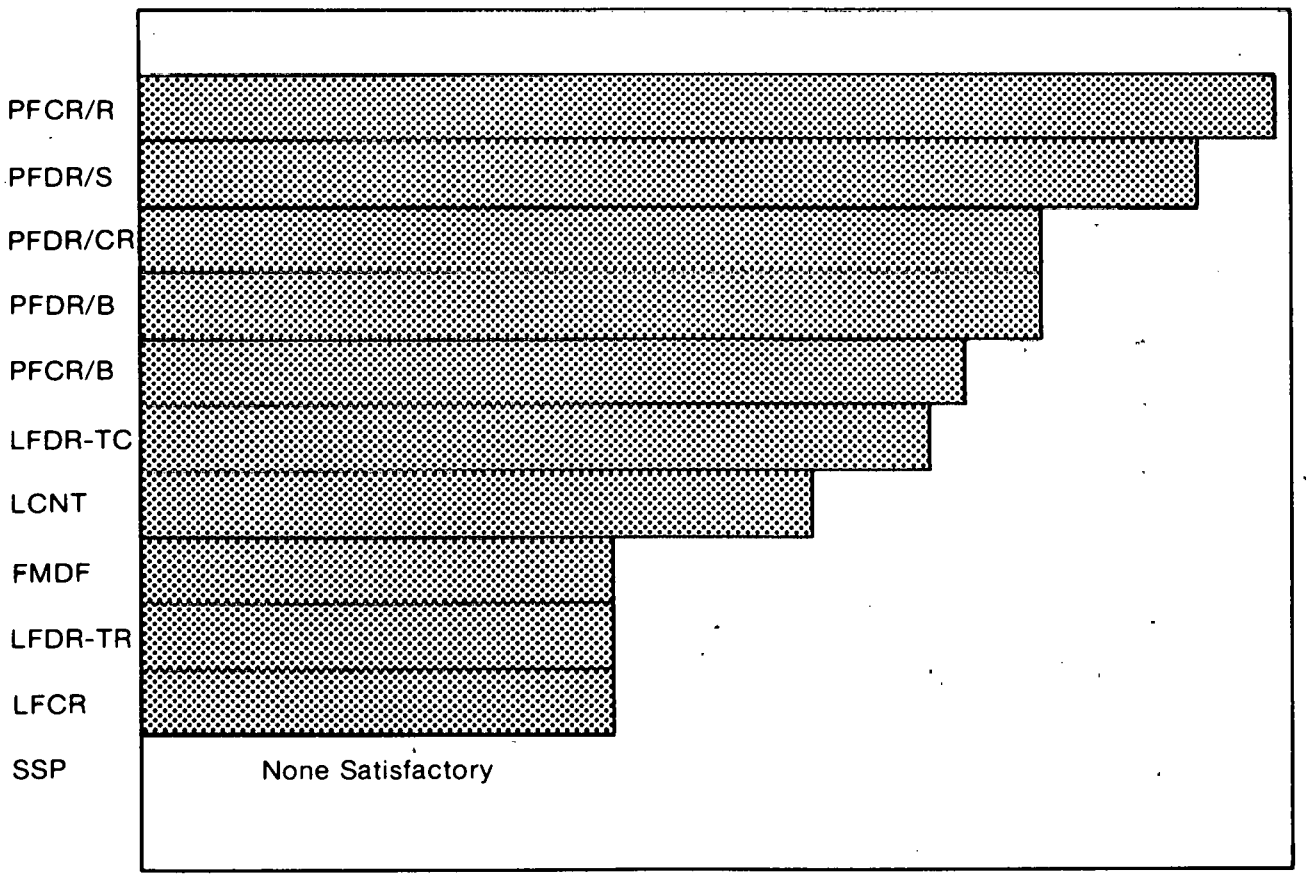

Figure 3-28. Relative System Preference Scores (Group A)

- Central receiver systems (PFCR/R, LFCR) have improved optical efficiencies at larger sizes;
- Thermal storage systems at higher capacities are more economical. At smaller sizes all high storage options drive the capital cost beyond the acceptable limit; therefore, storage benefits are realized only at the 10 MW_e size (PFDR/CR).

Table 3-10. FINAL OVERALL RANKING OF 1-10 MW_e SYSTEMS FOR UTILITY APPLICATIONS

Group	Rank	System
I	1	Point-focus central receiver with Rankine power conversion (PFCR/R)
	2	Parabolic dish collectors with distributed Stirling engines (PFDR/S)
II	3	Parabolic dish collectors with central Rankine power conversion (PFDR/CR)
	4	Parabolic dish collectors with distributed Brayton engines (PFDR/B)
	5	Point focus central receiver with Brayton power conversion (PFCR/B)
	6	Parabolic trough system (LFDR-TC)
	7	Low concentration, nontracking CPC system (LCNT)
III	8	Line-focus central receiver system (LFCR)
	9	Fixed mirror, distributed focus bowl system (FMDF)
	10	Segmented trough with tracking receiver system (LFDR-TR)
	11	Shallow solar pond system (SSP)

Table 3-11. HIGHEST RATED SYSTEM VARIATIONS

System	Highest Rated Variations
PFCR/R	10MW_e/0.7CF
PFDR/S	10MW_e/0.35CF (No Storage) & 10 MW_e/0.7CF
PFDR/B	10MW_e/0.34CF (No Storage) & 5 MW_e/0.33CF (No Storage)
PFCR/B	10MW_e/0.27CF (No Storage)
LFDR-TC	10MW_e/0.34CF (No Storage) & 10 MW_e/0.4CF
LCNT	10MW_e/0.4CF & 10 MW_e/0.34CF (No Storage)
PFDR/CR	10MW_e/0.65CF
LFDR-TR	10MW_e/0.4CF & 5 MW_e/0.4CF
FMDF	10MW_e/0.4CF & 5MW_e/0.4CF
LFCR	10MW_e/0.4CF

3.3.4 Sensitivity Analysis

Two types of uncertainty may affect the ranking results. First, there is uncertainty in prediction of system attribute values; second, there are uncertainties in the quantification of the decision process used in the MADA. The sensitivity of the rankings was examined with respect to both types of uncertainty to ascertain whether a consistent and reliable ranking could be developed.

Sensitivity to variations in values of attributes (uncertainty in the system performance and cost model) was tested using extreme values for two attributes. Capital cost and capacity factor were tested in this analysis since they were chosen by the decision makers as the most important attributes. To determine the extreme values, uncertainty ranges were established for the two attributes for each system (see Table 3-13). Preference scores were determined for each option as the two attributes were assigned their worst and best values. These extreme values are shown in Table 3-13.

The results of this analysis are depicted in Fig. 3-29. For each system the bars indicate the range of variation of total preference score as capital cost and capacity factor are assigned their worst and their best values. Vertical lines passing through each bar indicate the most likely preference scores. The extended lines define the upper and lower bounds for the system preference scores in the three groups. Results show that the ranking is highly sensitive to capital cost uncertainty, though systems tend to remain within the major ranking groups defined in Section 1.0 despite capital cost changes. Notable exceptions are the PFDR/CR and the PFDR/B systems.

The ranking results are not sensitive to capacity factor variation. This insensitivity can be attributed to the fact that the range of uncertainty in capacity factor is much less than the uncertainty in the cost.

The conclusion from the sensitivity analysis is that the best four concepts are PFCR/R, PFDR/S, PFDR/CR, and PFDR/B. This ranking is consistent and basically imperturbable with respect to uncertainty in system attribute values. However, changes in expected capital costs would affect the exact placement of these concepts within the top four positions.

To determine the effects of uncertainty in decision analysis input factors (decision maker preference) on the system ranking, several approaches were used:

- Many decision makers were sampled;
- Averaged rankings were used;
- Decision makers with different attribute weighting schemes were hypothesized to test the rankings; and
- Selective attributes were dropped, and the systems were reevaluated.

To determine the role of uncertainty in decision maker characterization, sensitivity to variations in decision maker preferences was tested. The relative weighting given to the attributes governs the decision process. To examine the effect of variations in attribute weighting, extreme viewpoints were represented by hypothesized weighting schemes that might be considered representative of concerns for profit, social impact, market value, and relative indifference between attributes. Table 3-14 presents the weights for these four variations and the base case, the average decision maker of Group C.

Table 3-12. RANKING OF SYSTEMS BY CAPACITY

Rank	1 MW_e	5 MW_e	10 MW_e
1	PFDR/S	PFDR/S	PFCR/R
2	PFDR/B	PFDR/B	PFDR/S
3	[a] PFCR/R	PFCR/R	PFDR/CR
4	LFDR-TC	LFDR-TC	PFDR/B
5	LCNT	PFCR/B	PFCR/B
6	PFCR/B	LCNT	LFDR-TC
7	PFDR/CR	PFDR/CR	LCNT
8	FMDF	LFDR-TR	LFCR
9	[b] LFDR-TR	FMDF	FMDF
10	[b] LFCR	LFCR	LFDR-TR
11	[b] SSP	[b] SSP	[b] SSP

[a] Indicates virtual tie.

[b] Indicates system attributes fall outside acceptable ranges.

Table 3-13. ASSIGNED VALUE UNCERTAINTIES FOR 1-10 MW_e SYSTEMS[a]

System	Capital Cost		Capacity Factor	
	High	Low	High	Low
PFCR/R	5	-5	5	-5
LFCR	12	-10	5	-10
PFDR/S	11	-25	10	-5
FMDF	20	-25	10	-10
LFDR-TC	10	-6	5	-5
LFDR-TR	25	15	5	-10
LCNT	18	-20	5	-10
SSP	15	-35	15	-15
PFCR/B	2	-7	10	-5
PFDR/B	10	-20	5	-5
PFDR/CR	15	-18	5	-5

[a] All uncertainties are expressed as the percentage of deviation from the most likely attribute values.

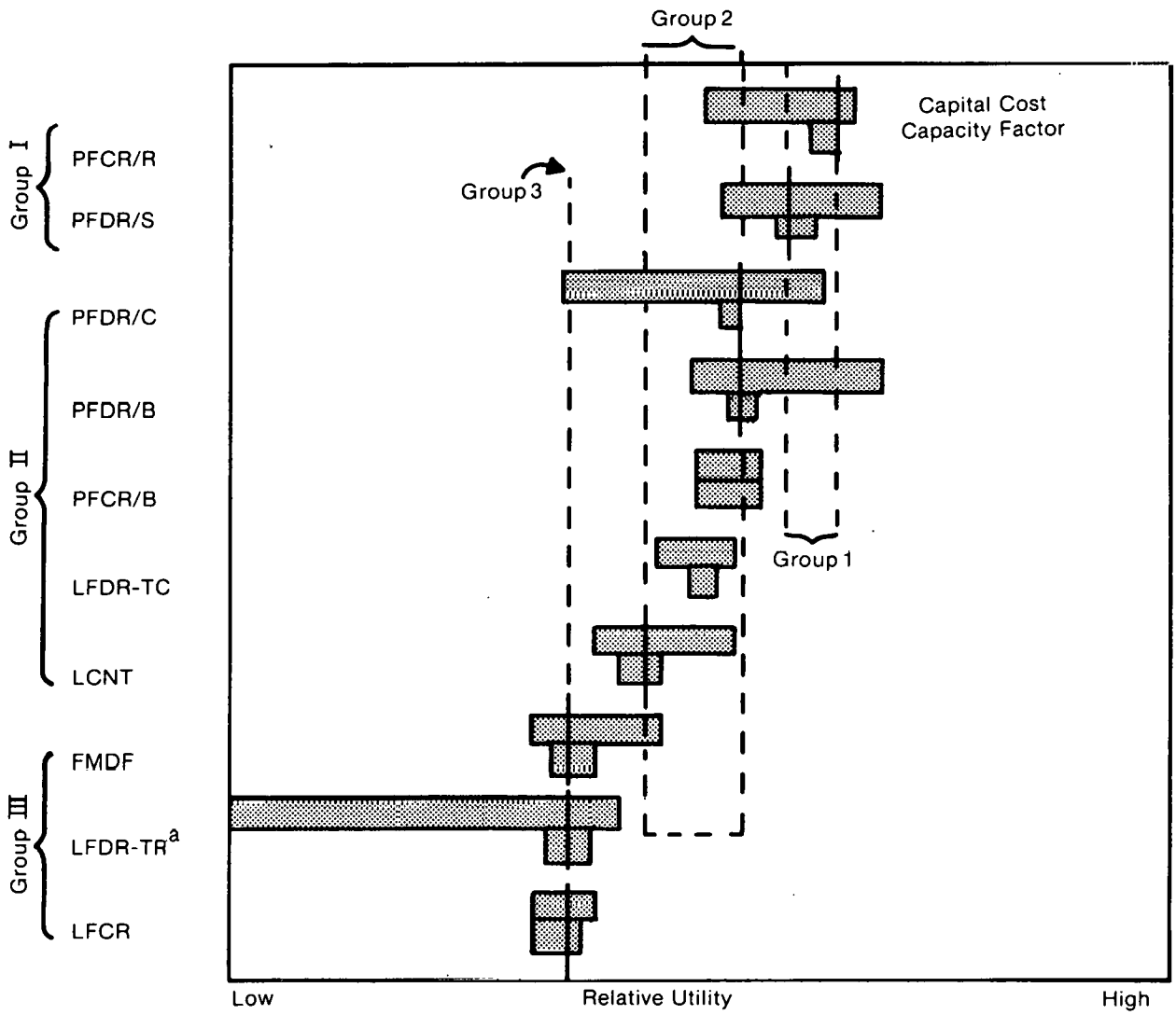

[a]All options exceed maximum acceptable levels when capital costs are increased to their highest values.

Figure 3-29. Effects of System Uncertainty on Rankings (1-10 MW_e Systems)

Table 3-14. VARIATION OF ATTRIBUTE WEIGHTS

Attribute	Concern				
	Base Case	Profit	Social Impact	Market Value	Indif-ference
Capital Cost	0.27	0.33	0.27	0.27	0.14
Capacity Factor	0.24	0.33	0.24	0.24	0.14
O & M	0.15	0.33	0.15	0.15	0.14
Safety	0.09	—	0.39	0.09	0.14
Environment	0.09	—	0.39	0.09	0.14
R & D Costs	0.09	—	0.09	0.38	0.14
Applications	0.09	—	0.09	0.38	0.14

Table 3-15 shows a revised ranking for each viewpoint tested. These rankings represent extreme variations and do not reflect viewpoints of any of the decision makers interviewed. Thus, the rankings indicate how stereotypical decision makers might evaluate the systems. The only significant variation occurs when the top-ranked PFCR/R system drops from first to seventh place when considered by the hypothetical decision maker concerned about social impacts. Interestingly, the final column (ranking for equal attribute weights) is consistent with the original ranking. However, some of the emphasis and resolution of the ranking is lost when equal weights are applied.

Table 3-15. EFFECT ON RANKING OF VARIATIONS IN ATTRIBUTE WEIGHTS

System	Rankings				
	Base Case	Profit	Social Impact	Market Value	Indif-ference
PFCR/R	1	1	7	1	1
PFDR/S	2	2	2T[a]	4T	2T
PFDR/CR	3	3	2T	2T	2T
PFCR/B	5	5T	2T	4T	2T
PFDR/B	4	4	1	6T	2T
LFDR-TC	6	5T	2T	2T	2T
LCNT	7	5T	2T	6T	2T
LFCR	8T	8T	9T	10	8T
FMDF	8T	8T	9T	6T	8T
LFDR-TR	8T	8T	8	6T	8T
SSP	All Variations Eliminated By High Costs				

[a]T indicates a virtual tie.

SERI

SECTION 4.0

RESULTS OF 0.1-1 MW_e SYSTEM EVALUATION

Systems in the 0.1-1 MW_e study have been evaluated and ranked for applications with industry, small communities, and the military. The systems for these applications are similar to those designed for utility applications in the 1-10 MW_e study, with a few exceptions. The balance of plant designs for the smaller systems is more simplified than for utility applications, resulting in substantially lower balance of plant costs than for the 1-10 MW_e systems. A simpler control system, fewer buildings, and less ground preparation account for much of this reduction.

Recent studies have indicated that optimum dish size for distributed systems may be larger than previously thought. Consequently, the paraboloidal dish systems were designed with a dish diameter of 15 m for the 0.1-1 MW_e study, as opposed to the 10-m dish size for the 1-10 MW_e systems. The larger dishes yield economies of scale for both the receiver and engine. Because fewer of the larger dishes are required, the thermal transport costs for the central generation system were reduced.

4.1 DESCRIPTIONS OF GENERIC SYSTEMS

Generic systems were designed to be representative of mid-1990s technology. Component selection does not indicate the only specific design direction to be pursued within a given generic system. Figure 4-1 identifies the generic options considered in the 0.1-1 MW_e ranking, in terms of basic collector subsystem characteristics. Table 4-1 describes the combinations of power conversion technologies that comprise each generic system.

4.1.1 Point-Focus Central Receiver/Rankine System

The representative PFCR/R system is similar to the PFCR/R system for the 1-10 MW_e application described in Section 3.1.1. The 1 MW_e system uses a central Rankine steam turbine in a system configuration shown in Fig. 3-2. The 0.1 MW_e and 0.3 MW_e systems use an organic Rankine turbine because of higher efficiencies at small sizes (see Fig. 4-2). The heliostats are arranged in a north field configuration for all plants (see Fig. 3-3). The receiver is a shallow cavity facing north, with a tower height that varies from 10 m to 30 m depending on plant rating.

4.1.2 Point-Focus Central Receiver/Brayton System

The characteristic PFCR/B system is similar to the PFCR/B system described in Section 3.1.2. The heliostats are arranged in a north field configuration, and the receiver is a shallow north-facing cavity. The receiver operates at 650° C, a temperature lower than that used for the 1-10 MW_e system, to reduce receiver losses. The tower height ranges from 10 m to 30 m depending on plant rating. The Brayton engine is sized up to four times plant rated output when necessary to charge electrical storage to achieve higher capacity factors. A system flow schematic drawing is shown in Fig. 4-3.

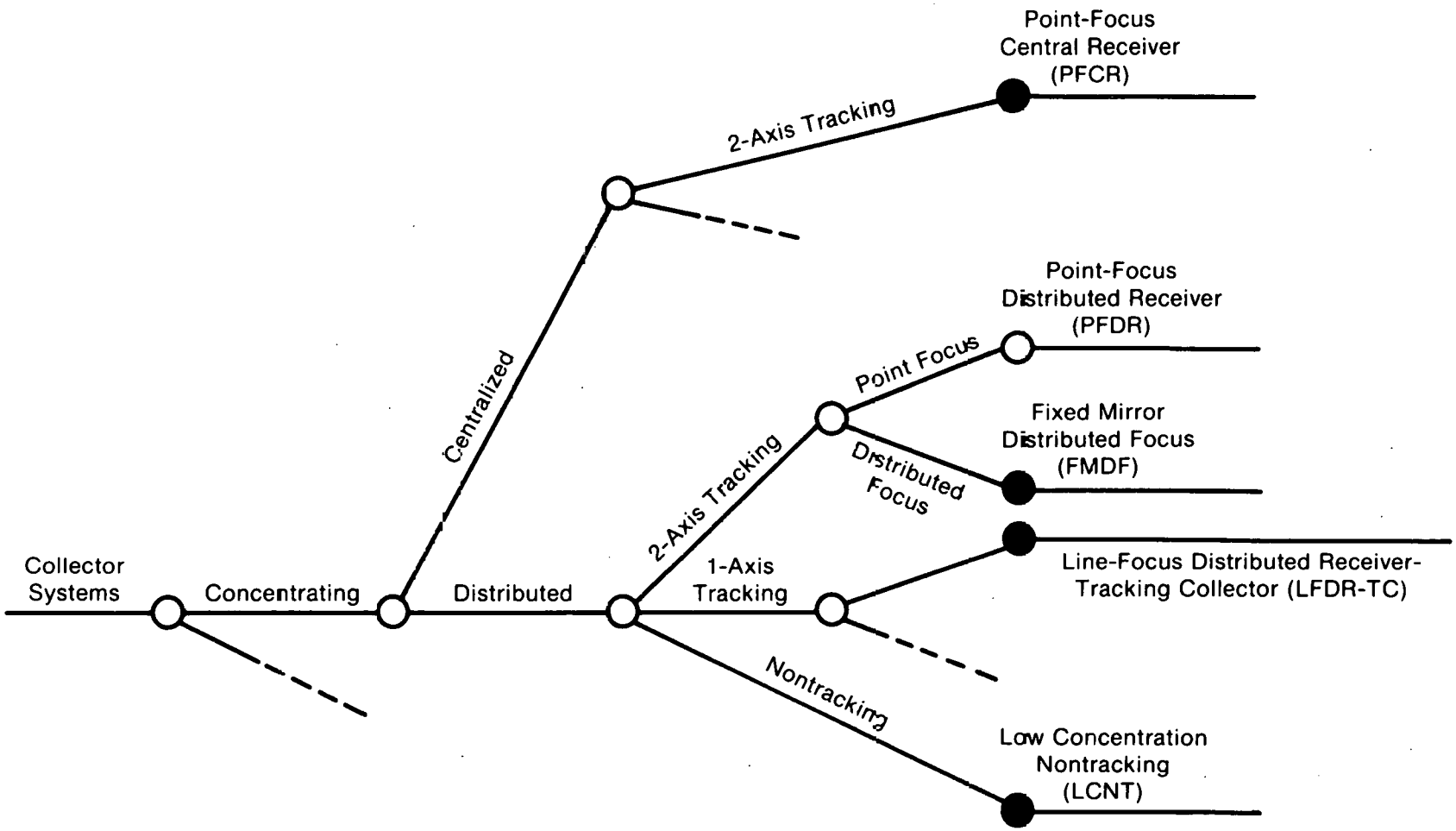

Figure 4-1. Generic Options in the 0.1-1 MW_e Ranking

Table 4-1. Combination of Technologies Considered in 0.1-1 MW_e Systems Evaluation

Concentrator Options	Systems Options											
	Conversion					Transport				Storage		
											Thermal	
	Cent-Rankine	Cent-Brayton	Cent-Stirling	Dist-Brayton	Dist-Rankine	Dist-Stirling	Electrical	Salt	Oil	Electrical	Oil	Salt
Point-Focus Central Receiver	●							●				●
Point-Focus Central Receiver		●					●			●		
Point-Focus Central Receiver			●				●			●		
Point-Focus Distributed Receiver	●							●				●
Point-Focus Distributed Receiver					●		●			●		
Point-Focus Distributed Receiver				●			●			●		
Point-Focus Distributed Receiver						●	●			●		
Fixed Mirror Distributed Focus	●							●				●
Line-Focus Distributed Receiver — Tracking Collector	●								●		●	
Low Concentration Nontracking	●								●		●	

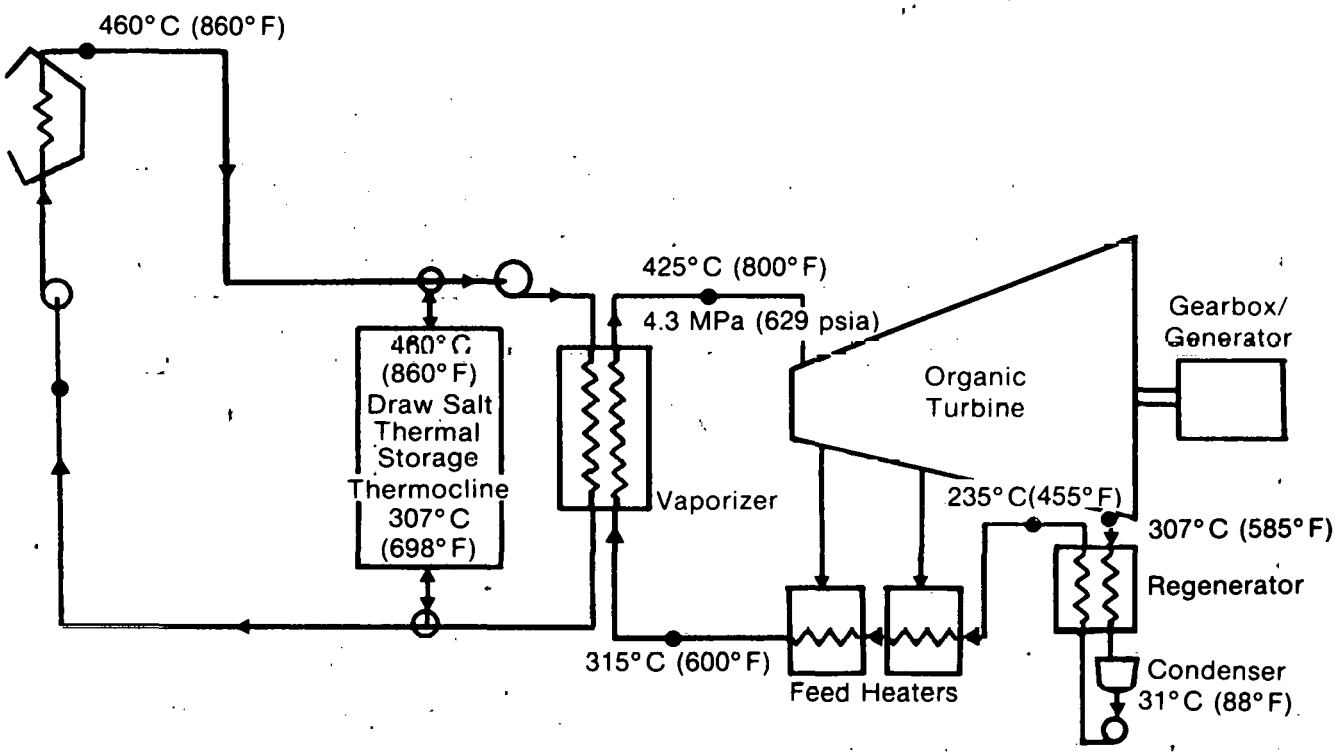

Figure 4-2. Point-Focus Central Receiver/Rankine (PFCR/R) 0.1 MWe and 0.3 MWe System Flow Schematic Drawing

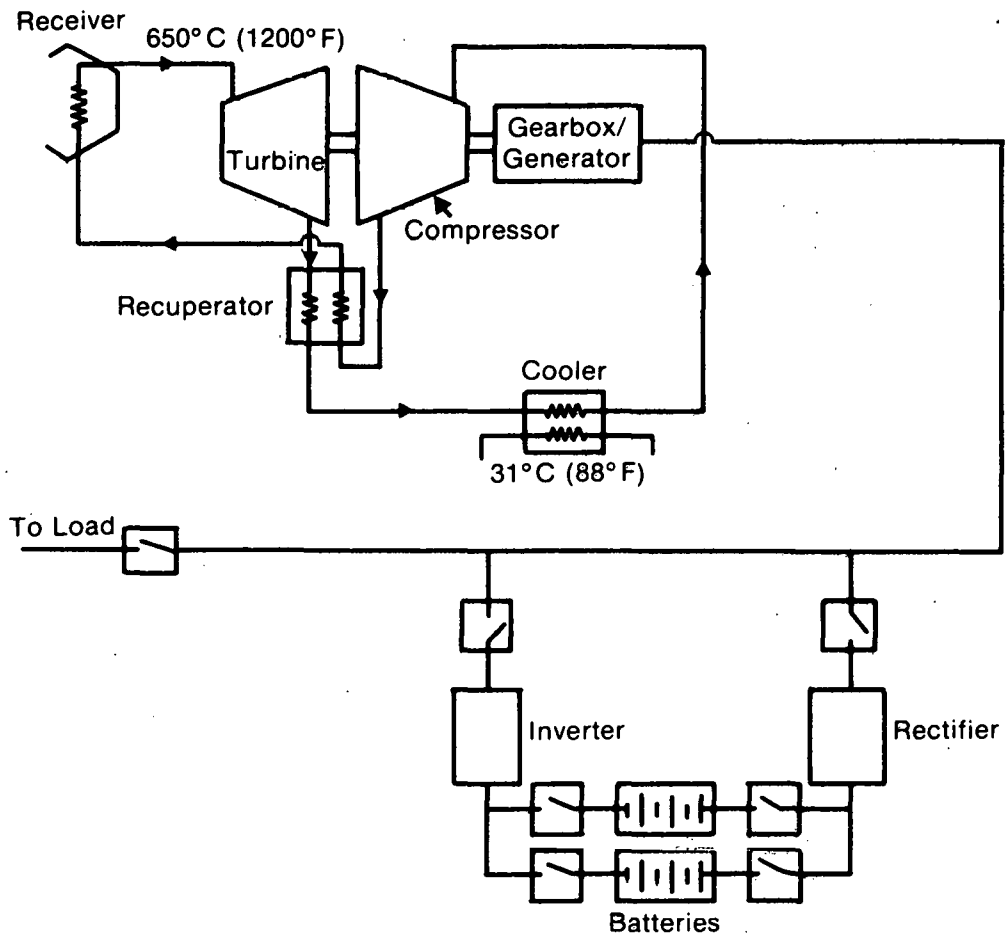

Figure 4-3. Point-Focus Central Receiver/Brayton (PFCR/B) System Flow Schematic Drawing

4.1.3 Point-Focus Central Receiver/Stirling System

The typical PFCR/S system incorporates a single large central Stirling engine with electrical storage. The Stirling engine and generator are close-coupled to the receiver atop the tower. The Stirling engine is sized up to four times plant rated output when necessary to charge storage to achieve higher capacity factors. The output of the plant, however, is limited to the rated capacity. A flow schematic drawing is presented in Fig. 4-4.

The concentrator field consists of two-axis tracking heliostats arranged in a north field configuration. Each heliostat reflective surface consists of back-silvered thin glass of 50-m^2 (540-ft^2) aperture.

The receiver is a potassium heat pipe cavity facing north, with small amounts of buffer thermal storage in encapsulated latent heat salt modules. The receiver is supported on a free-standing steel tower that varies from 10 m to 30 m in height, depending on plant capacity.

Because of the difficulty of integrating thermal storage into the system, electrical storage is provided by redox batteries dedicated to the plant and coupled in parallel with the generator output with appropriate power-conditioning equipment.

4.1.4 Point-Focus Distributed Receiver/Stirling System

The representative PFDR/S system is similar to the PFDR/S system described in Section 3.1.3 with the exception that a 15-m dish is used instead of a 10-m dish. For the 0.1-1 MW_e application a 50-kW kinematic Stirling engine is used at the focus of each dish. A system flow schematic drawing is shown in Fig. 3-6.

4.1.5 Point-Focus Distributed Receiver/Brayton System

The typical PFDR/B system is identical to that described in Section 3.1.4 with the exception of the larger dishes. A drawing is shown in Fig. 3-8. The system uses a 39-kW closed-cycle recuperated Brayton engine.

4.1.6 Point-Focus Distributed Receiver/Rankine System

A field of paraboloidal dishes with a 36-kW organic Rankine turbine and generator located at the focus of each dish, the representative PFDR/R system is presented in Fig. 4-5.

The collector field consists of two-axis tracking paraboloidal dishes. The nominal dish size is 15 m (49 ft) in diameter. The dish reflective surface is back-silvered thin glass, similar to the PFDR/S and PFDR/B systems discussed previously.

The receiver, a low temperature heat pipe (425° C) using either sulfur or an organic fluid, can use small amounts of thermal storage from encapsulated latent heat salt modules.

Redox batteries that are coupled in parallel with the generators' output and dedicated to the plant provide the electrical storage.

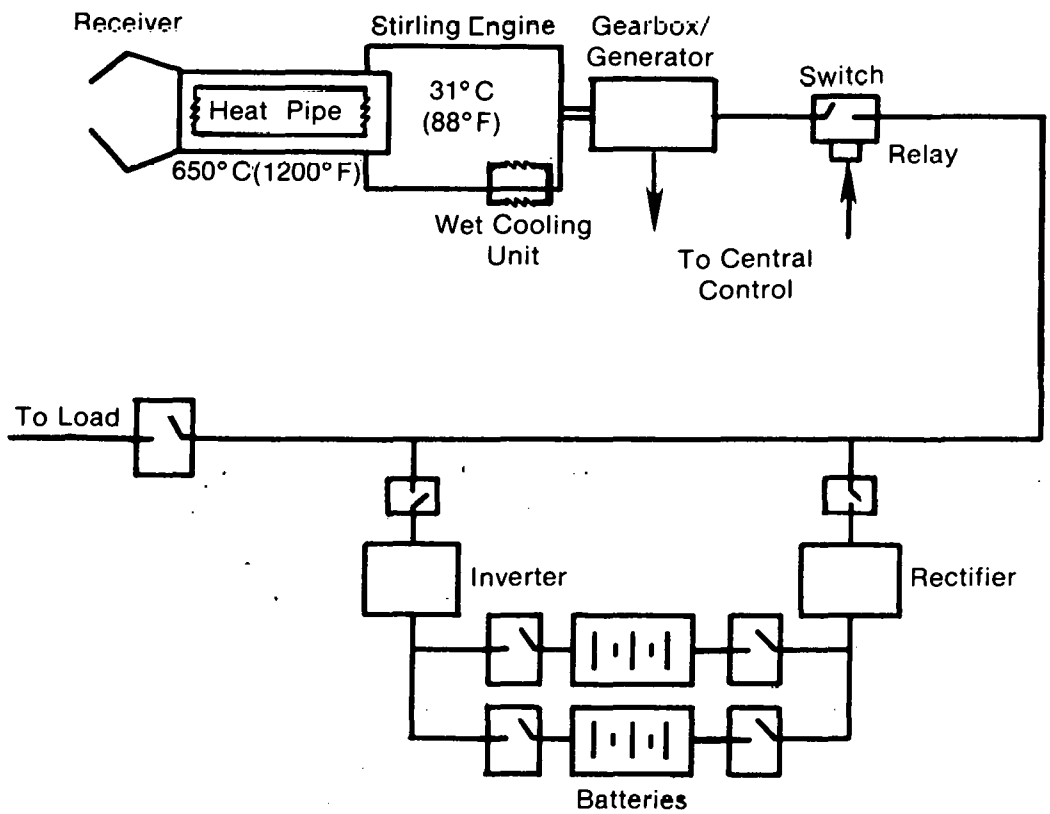

Figure 4-4. Point-Focus Central Receiver/Stirling (PFCR/S) System Flow Schematic Drawing

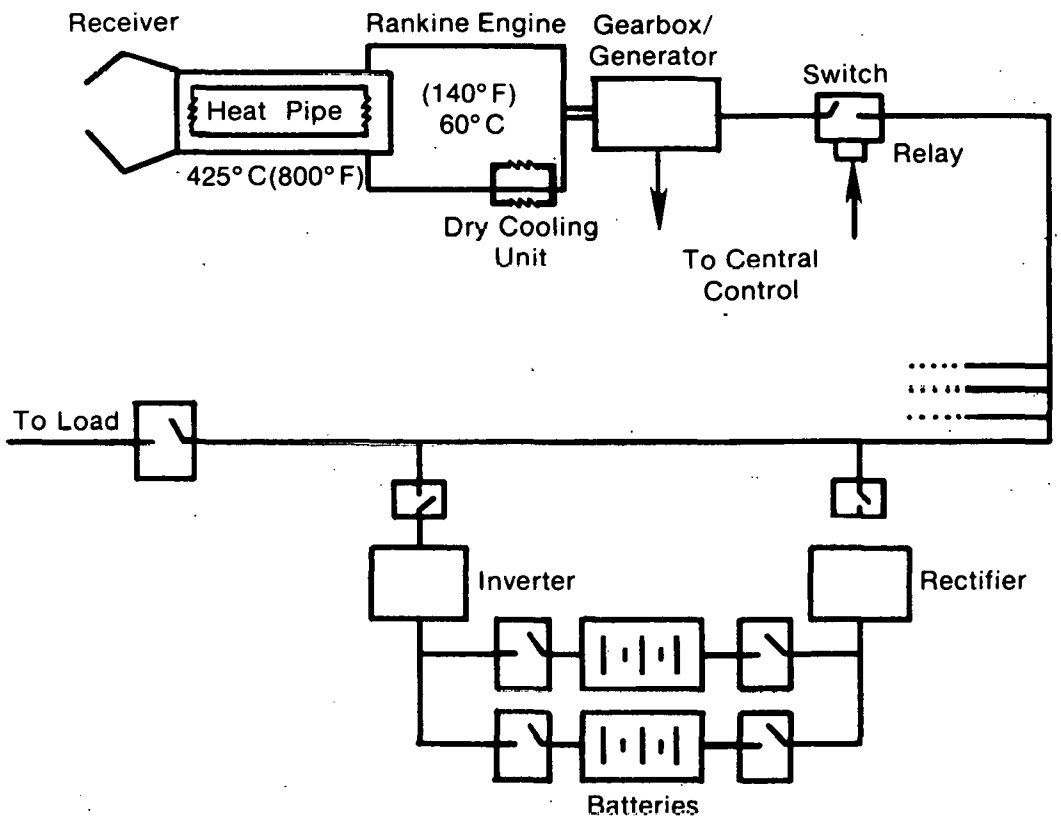

Figure 4-5. Point-Focus Distributed Receiver/Rankine (PFDR/R) System Flow Schematic Drawing

4.1.7 Point-Focus Distributed Receiver/Central Rankine System

The characteristic PFDR/CR system is similar to that described in Section 3.1.5. The 1 MW_e system uses a central steam Rankine turbine. The 0.1 MW_e and 0.3 MW_e systems use a central organic Rankine turbine.

The receiver is a shallow cavity with a selective surface. Draw salt is the receiver coolant and heat transfer fluid.

Figure 3-9 shows a schematic drawing of the 1 MW_e (steam) system. See Fig. 4-6 for a drawing of the 0.1 MW_e and 0.3 MW_e (organic) systems.

4.1.8 Fixed Mirror Distributed Focus System

The representative FMDF system is similar to that described in Section 3.1.10. The 1 MW_e system uses a central steam Rankine turbine. The 0.1 MW_e and 0.3 MW_e systems use a central organic Rankine turbine. Draw salt is the receiver coolant and heat transfer medium for both systems. A system flow schematic drawing is shown in Fig. 3-19 for the 1 MW_e (steam) system and in Fig. 4-7 for the 0.1 MW_e and 0.3 MW_e (organic) systems.

4.1.9 Line Focus Distributed Receiver-Tracking Collector System

The typical LFDR-TC system, similar to that described in Section 3.1.7, uses a central organic Rankine turbine. See Fig. 4-8.

4.1.10 Low Concentration Nontracking System

Similar to that described in Section 3.1.6, the representative LCNT system uses a central organic Rankine turbine, as shown in Fig. 4-9.

4.2 TECHNICAL AND ECONOMIC EVALUATION OF 0.1-1 MW_e SYSTEMS

The initial step in the evaluation is to determine the cost of energy ($\overline{BBEC}$) delivered by each system.

4.2.1 Results of Economic Analysis

Tables 4-2 through 4-4 illustrate the variations of $\overline{BBEC}$ with capacity and capacity factor. The more promising systems may attain energy costs as low as 92 mills/kWh for 0.1 MW_e capacity and 76 mills/kWh for 1 MW_e capacity.

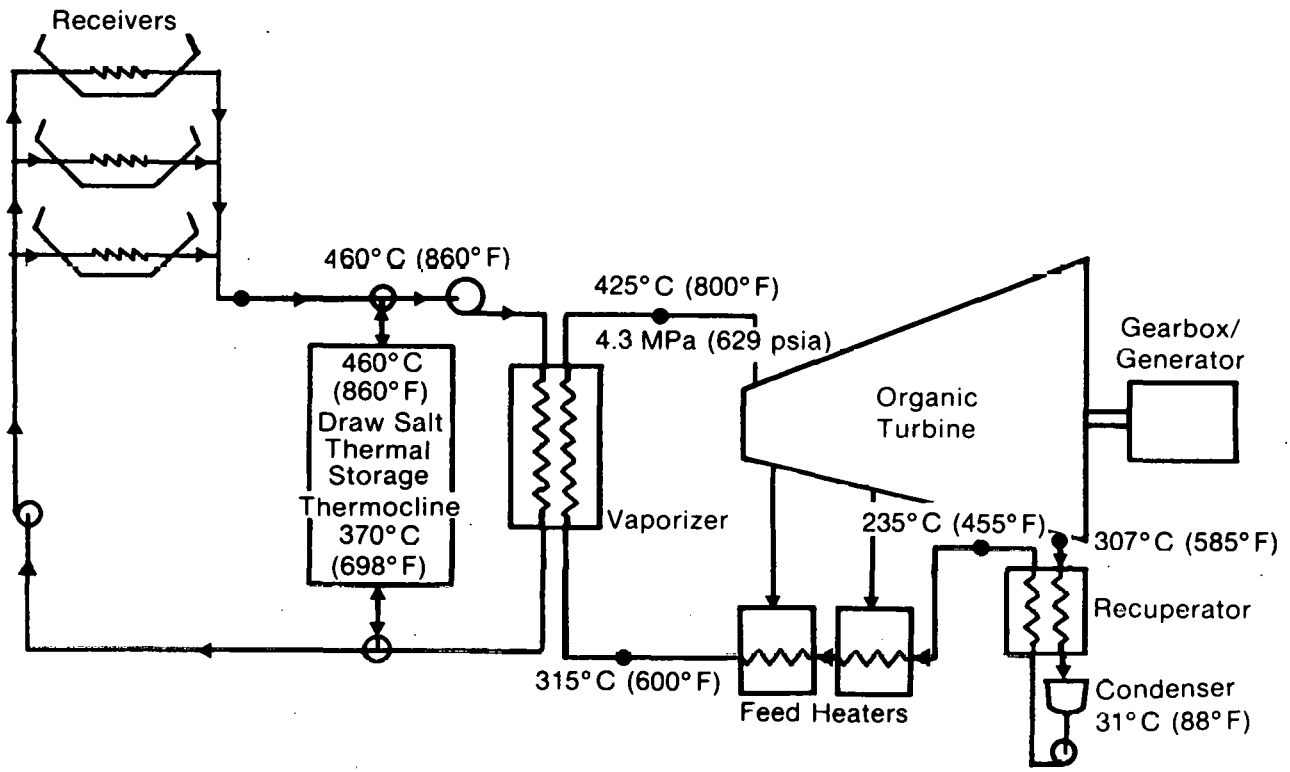

Figure 4-6. Point-Focus Distributed Receiver/Central Rankine (PFDR/CR) 0.1 MWe and 0.3 MWe System Flow Schematic Drawing

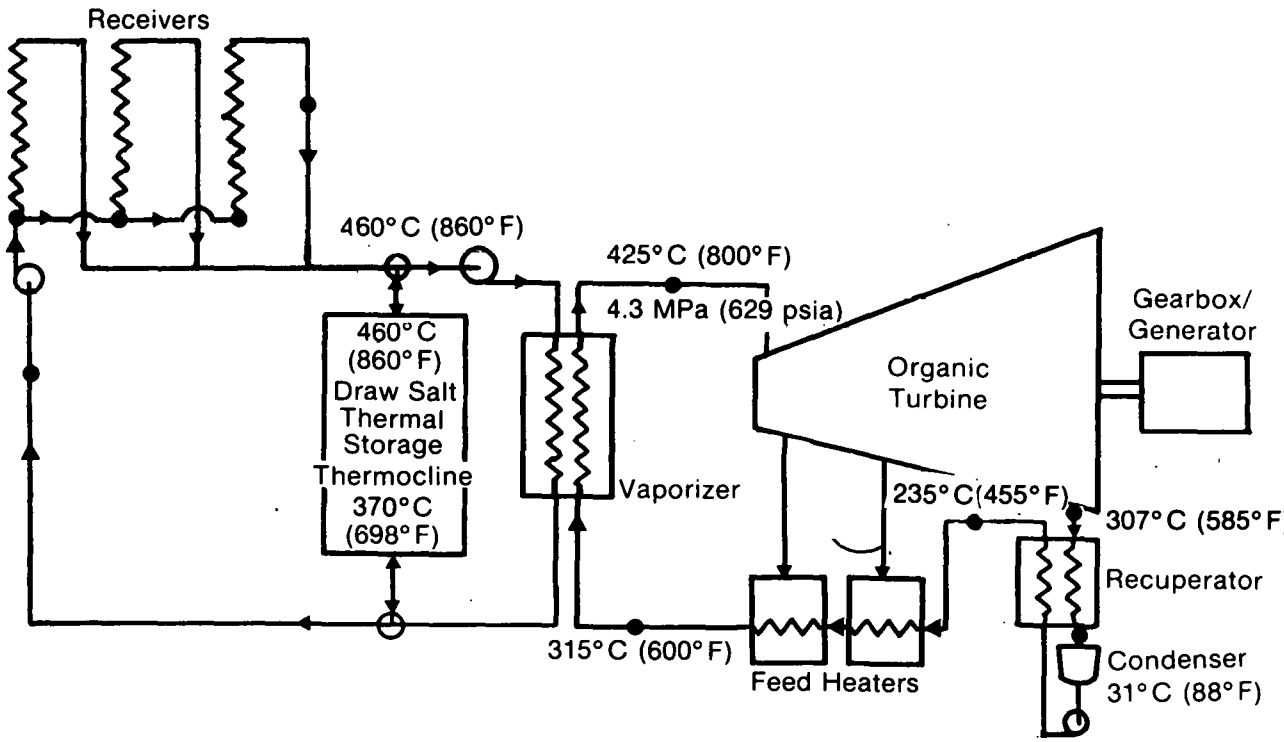

Figure 4-7. Fixed Mirror Distributed Focus (FMDF) 0.1 MW_e and 0.3 MW_e System Flow Schematic Drawing

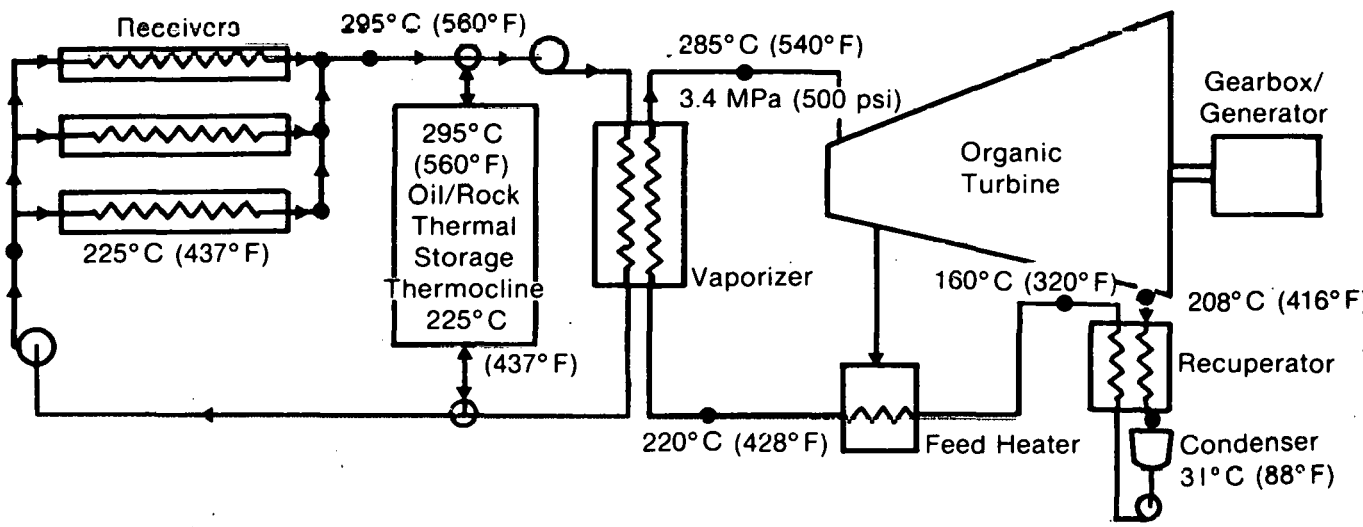

Figure 4-8. Line-Focus Distributed Receiver-Tracking Collector (LFDR-TC) System Flow Schematic Drawing

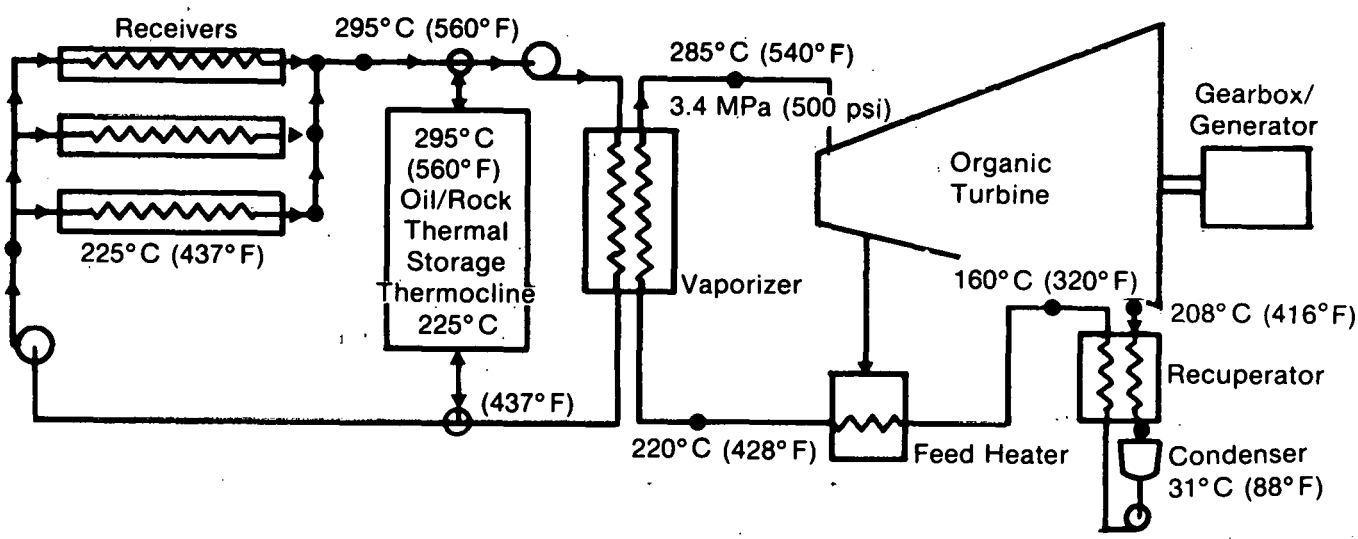

Figure 4-9. Low-Concentration Nontracking (LCNT) System Flow Schematic Drawing

Table 4-2. PROJECTED $\overline{BBEC}$ OF 0.1 MW_e SOLAR THERMAL ELECTRIC SYSTEMS (mills/kWh)

	Capacity Factor					
System	0.3	0.4	0.5	0.6	0.7	0.8
PFDR/S	94	93	94	98	92	103
PFDR/B	107	109	110	110	110	117
PFCR/S	132	133	124	128	120	132
PFCR/B	154	145	145	143	142	149
PFCR/R	153	140	127	123	121	120
PFDR/R	135	133	144	135	137	149
PFDR/CR	136	124	121	119	114	117
LFDR-TC	157	152	146	142	141	146
FMDF	202	168	150	182	158	148
LCNT	180	166	155	149	146	156

Table 4-3. PROJECTED $\overline{BBEC}$ OF 0.3 MW_e SOLAR THERMAL ELECTRIC SYSTEMS (mills/kWh)

	Capacity Factor					
System	0.3	0.4	0.5	0.6	0.7	0.8
PFDR/S	84	90	91	89	88	93
PFDR/B	98	104	106	106	106	114
PFCR/S	112	112	116	109	108	115
PFCR/B	125	124	123	125	123	130
PFCR/R	145	129	119	114	112	112
PFDR/R	127	128	131	131	132	146
PFDR/CR	129	118	115	113	114	112
LFDR-TC	145	141	137	133	132	137
FMDF	157	180	161	143	142	147
LCNT	167	154	144	139	138	143

Table 4-4. PROJECTED $\overline{BBEC}$ OF 1 MW_e SOLAR THERMAL ELECTRIC SYSTEMS (mills/kWh)

System	Capacity Factor					
	0.3	0.4	0.5	0.6	0.7	0.8
PFDR/S	76	84	84	85	85	94
PFDR/B	91	100	103	102	107	109
PFCR/S	94	101	100	97	98	111
PFCR/B	100	106	106	105	104	110
PFCR/R	125	111	107	104	99	98
PFDR/R	113	122	126	127	129	143
PFDR/CR	125	113	110	109	107	103
LFDR-TC	137	133	130	126	125	130
FMDF	147	138	134	132	129	135
LCNT	158	146	136	132	130	132

Table 4-5. VARIATION IN $\overline{BBEC}$ RANKING OF 0.1-1 MW_e SYSTEMS WITH CAPACITY

0.1 MW_e	0.3 MW_e	1.0 MW_e
PFDR/S	PFDR/S	PFDR/S
PFDR/B	PFDR/B	PFDR/B
PFDR/CR	PFCR/S	PFCR/S
PFCR/S	PFCR/R	PFCR/B
PFCR/R	PFDR/CR	PFCR/R
PFDR/R	PFCR/B	PFDR/CR
PFCR/B	PFDR/R	PFDR/R
LFDR-TC	LFDR-TC	LFDR-TC
LCNT	FMDF	FMDF
FMDF	LCNT	LCNT

Like the utility systems discussed in Section 3.2, the 0.1-1 MW_e systems are significantly affected by financing costs. Figure 4-10 shows the relative influence of principal amortization, interest, taxes, O&M, and other cost elements on the total $\overline{BBEC}$ for a typical 0.3 MW_e system.

The ranking of the systems by $\overline{BBEC}$ varies as a function of capacity (Table 4-5). Like the larger systems, the efficiencies of the various subsystems are influenced by economies of scale. Central generator systems using the Rankine cycle suffer at 0.1 and 0.3 MW_e, although the Stirling and Brayton engine-generators retain their high performance.

Typical capital costs for the 0.1 to 1 MW_e systems are shown as a function of capacity factor in Tables 4-6 through 4-8. The capital costs of the 1 MW_e industrial systems are lower than those of the 1 MW_e utility systems, largely because of lower balance of plant costs; i.e., the control and power conditioning subsystems are greatly simplified for industrial applications.

Figure 4-11 compares the $\overline{BBEC}$ as a function of capacity factor for four point-focus distributed receiver (dish) systems. Three systems use distributed generation based either on the Stirling, Brayton, or Rankine cycles accompanied by electrical storage; the fourth uses a central Rankine conversion system and thermal storage. The effect of thermal versus electrical storage is that the $\overline{BBEC}$ of a plant with central thermal storage decreases as capacity factor increases. Also, the $\overline{BBEC}$ of plants with electrical storage increases slightly to a capacity factor near 0.5, levels out to about 0.7, where the $\overline{BBEC}$ rises sharply as the capacity factor is increased further.

This ranking is maintained when each of the four point-focus distributed receiver systems is judged at its best capacity factor. Figure 4-12 illustrates the variation in $\overline{BBEC}$ as a function of capacity. All systems indicate cost improvement with increasing capacity. The PFDR/S system remains the most cost effective over the full capacity range.

After the 1-10 MW_e phase of the study was completed, data was received indicating that all PFDR systems might benefit from a larger dish diameter in the range of 15 m [7]. The PFDR/S, PFDR/B, and PFDR/R systems significantly improved in cost and performance when the dish diameter was increased from 10 m (33 ft) to 15 m (49 ft) because the combination of collector, receiver, and engine was better. The improvement in subsystem cost and performance from using a larger receiver engine and generator seems to offset the increased collector cost for a larger dish. Although the cost advantage has not yet been proved, the 0.1-1 MW_e industrial systems were designed using the larger dish. Figure 4-13 illustrates the effect of increasing dish diameter on the $\overline{BBEC}$. Dish sizes larger than 15 m were not investigated in this study.

System $\overline{BBEC}$ remains lower for the larger diameter parabolic dish collectors until capacity factors of ~ 0.8 are reached, when the cost of electrical storage is so high that the differences between collector designs no longer significantly offset overall system cost.

Figure 4-14 shows the variation in $\overline{BBEC}$ as a function of capacity factor for three central receiver concepts. That thermal storage becomes more cost effective as capacity factor increases is shown by the graph for the PFCR/R system in Fig. 4-14. The trends for the PFCR/S and PFCR/B systems generate different conclusions for systems with

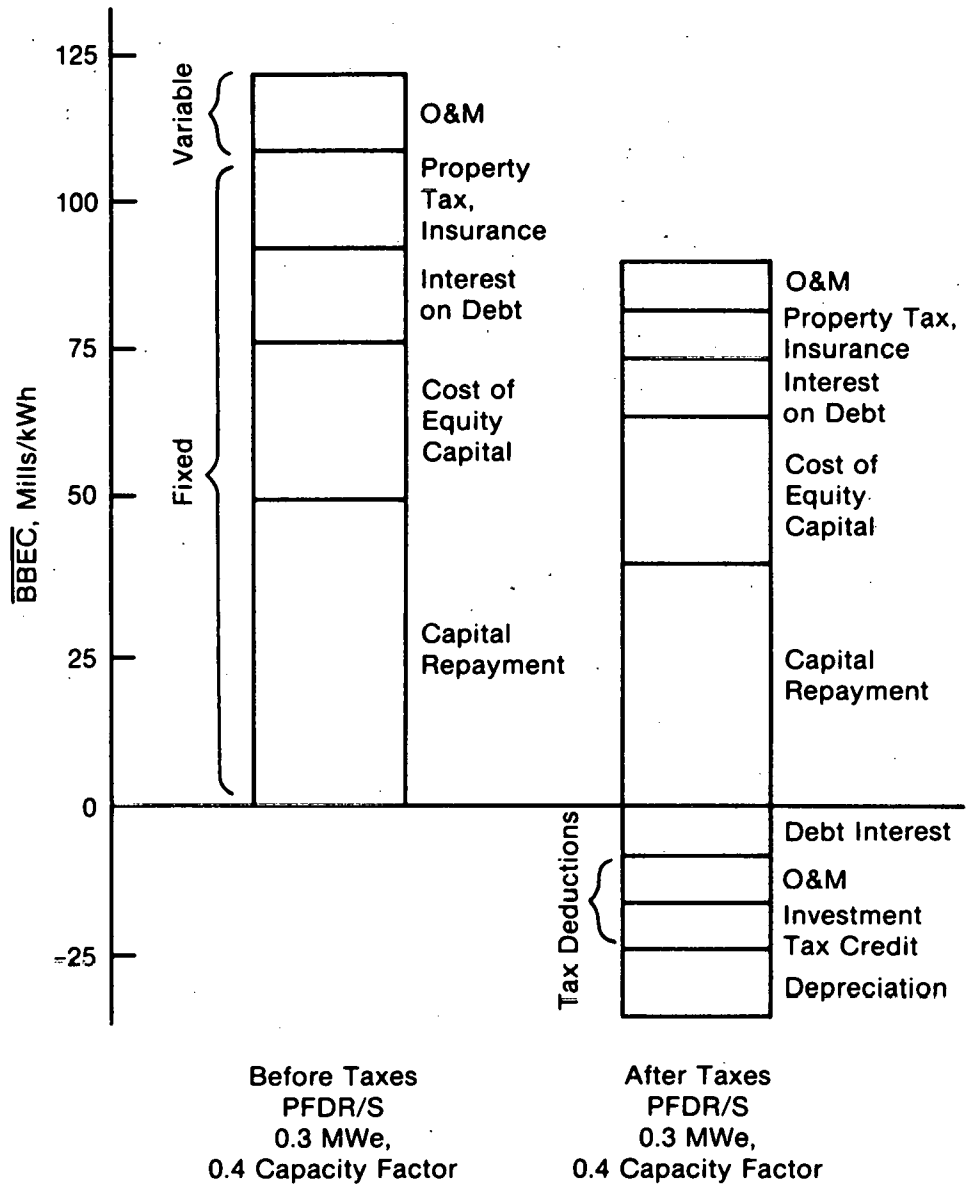

Figure 4-10. Breakdown of $\overline{BBEC}$ into Financing Components

Table 4-6. CAPITAL COST OF 0.1 MW_e INDUSTRIAL SYSTEMS ($/$kW_e$)

System	Capacity Factor 0.3	Capacity Factor 0.7
PFDR/S	1450	3380
PFDR/B	1540	4300
PFCR/S	1970	4470
PFCR/B	2370	5300
PFCR/R	2510	4460
PFDR/R	2130	5230
PFDR/CR	2250	4320
LFDR-TC	2590	5310
FMDF	3220	6240
LCNT	2860	5420

Table 4-7. CAPITAL COST OF 0.3 MW_e INDUSTRIAL SYSTEMS ($/$kW_e$)

System	Capacity Factor 0.3	Capacity Factor 0.7
PFDR/S	1090	3110
PFDR/B	1530	3770
PFCR/S	1660	3930
PFCR/B	1910	4560
PFCR/R	2220	4100
PFDR/R	1990	4800
PFDR/CR	2110	4000
LFDR-TC	2390	4830
FMDF	2710	5130
LCNT	3110	5030

Table 4-8. CAPITAL COST OF 1 MW_e INDUSTRIAL SYSTEMS ($/$kW_e$)

System	Capacity Factor 0.3	Capacity Factor 0.7
PFDR/S	980	2950
PFDR/B	1350	3800
PFCR/S	1440	3560
PFCR/B	1500	3700
PFCR/R	1860	3630
PFDR/R	1670	4730
PFDR/CR	1870	3930
LFDR-TC	2080	4510
FMDF	2420	4670
LCNT	2410	5400

electrical storage (see Fig. 4-14). The $\overline{BBEC}$ increases as the first increment of storage is added, reflecting the addition of hardware for the charging and discharging of storage. $\overline{BBEC}$ drops as more storage capacity is added, and the charge/discharge hardware is better used. At high capacity factors, $\overline{BBEC}$ begins to rise as the required collector area rapidly increases to use insolation in early and late parts of the day.

When the $\overline{BBEC}$ of each system is compared at different capacities for the optimum capacity factor of each system (Fig. 4-15), the PFCR/S appears to be slightly more cost effective than either the PFCR/R or PFCR/B concepts.

For industrial systems, the simple payback period is a highly significant criterion. Table 4-9 shows the range of simple payback periods for each of the systems considered. The 0.3 MW_e systems that operate at their optimum capacity factor are typical. The cost of energy from alternate sources to users strongly influences the payback period (see Fig. 4-16). The estimated simple payback period is 5.8 yrs for a PFDR/S system with a capacity of 0.3 MW_e and a capacity factor of 0.3 (Table 4-9). This payback period is based upon an alternate energy cost of 80 mills/kWh, which is representative of the 60 to 90 mills/kWh currently paid by the users interviewed for this study. The increase in the real cost of energy from conventional sources will continue to decrease the payback period for small solar thermal systems.

4.2.2 Sensitivity Analyses

Industrial solar thermal electric generating systems are as sensitive to different economic scenarios as their larger counterparts discussed in Section 3.2. Table 4-10 illustrates this sensitivity for a PFDR/S system with a capacity of 0.3 MW_e and a capacity factor of 0.4.

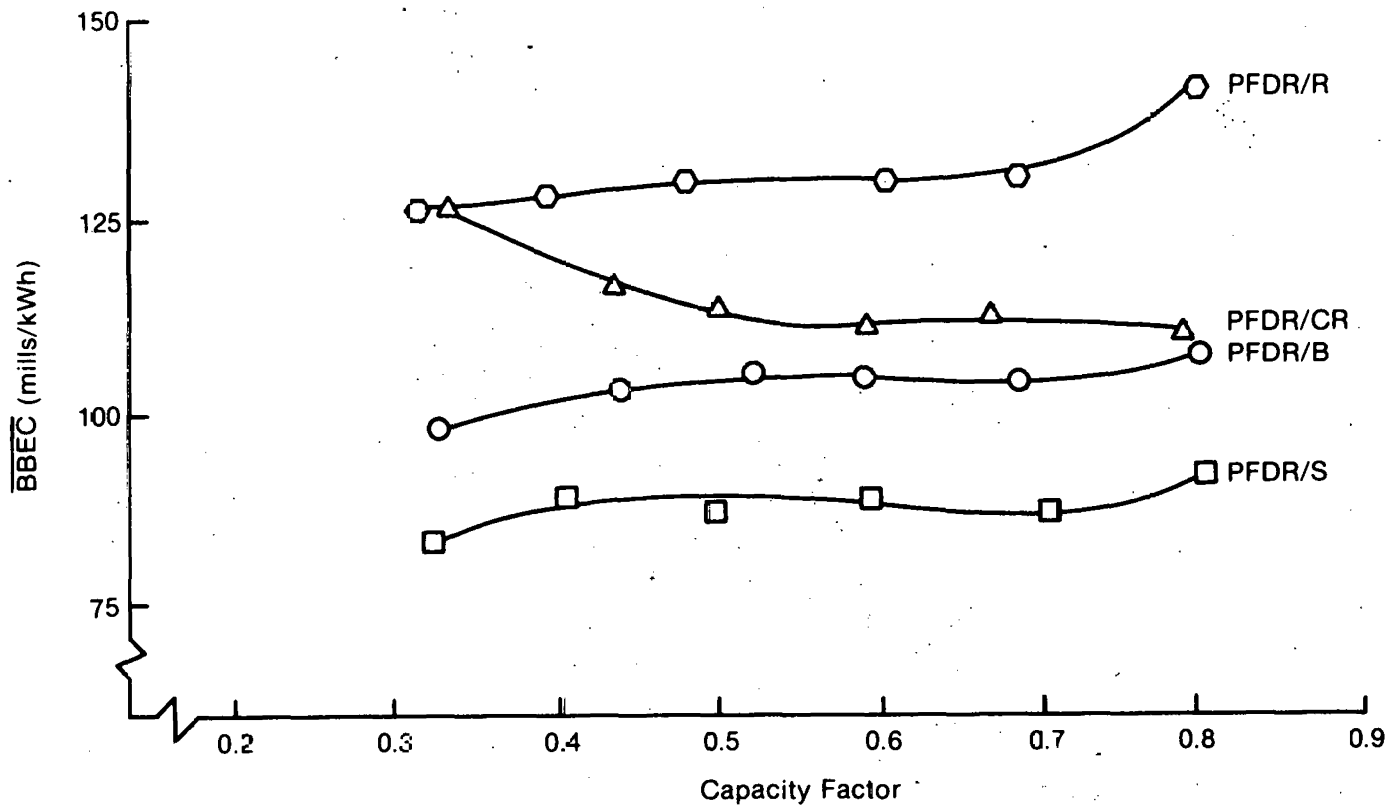

Figure 4-11. Levelized Busbar Energy Costs as a Function of Capacity Factor, 0.3 MW_e Parabolic Dish Systems

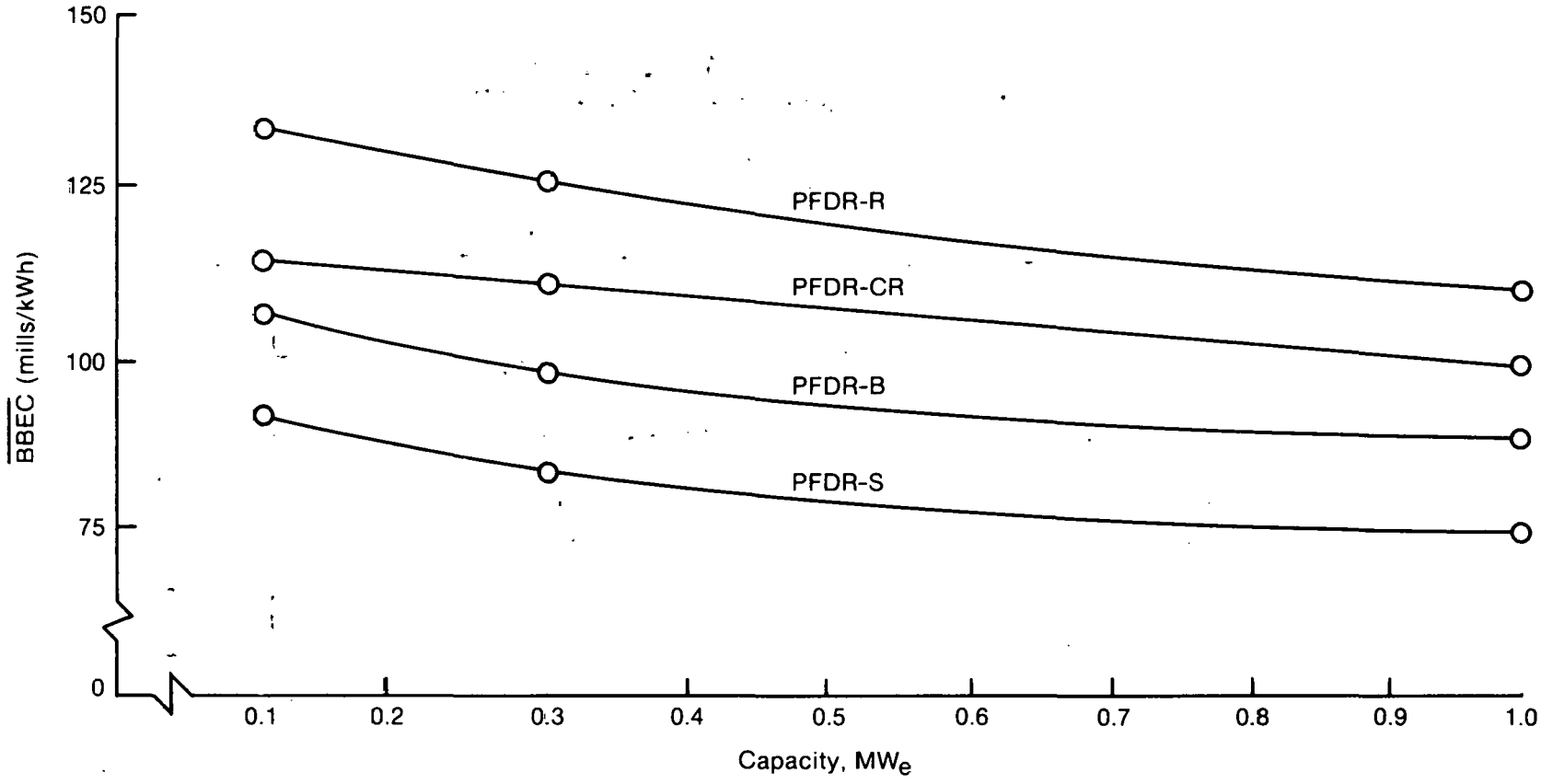

Figure 4-12. Levelized Busbar Energy Costs as a Function of Capacity, Parabolic Dish Systems, Best Capacity Factors

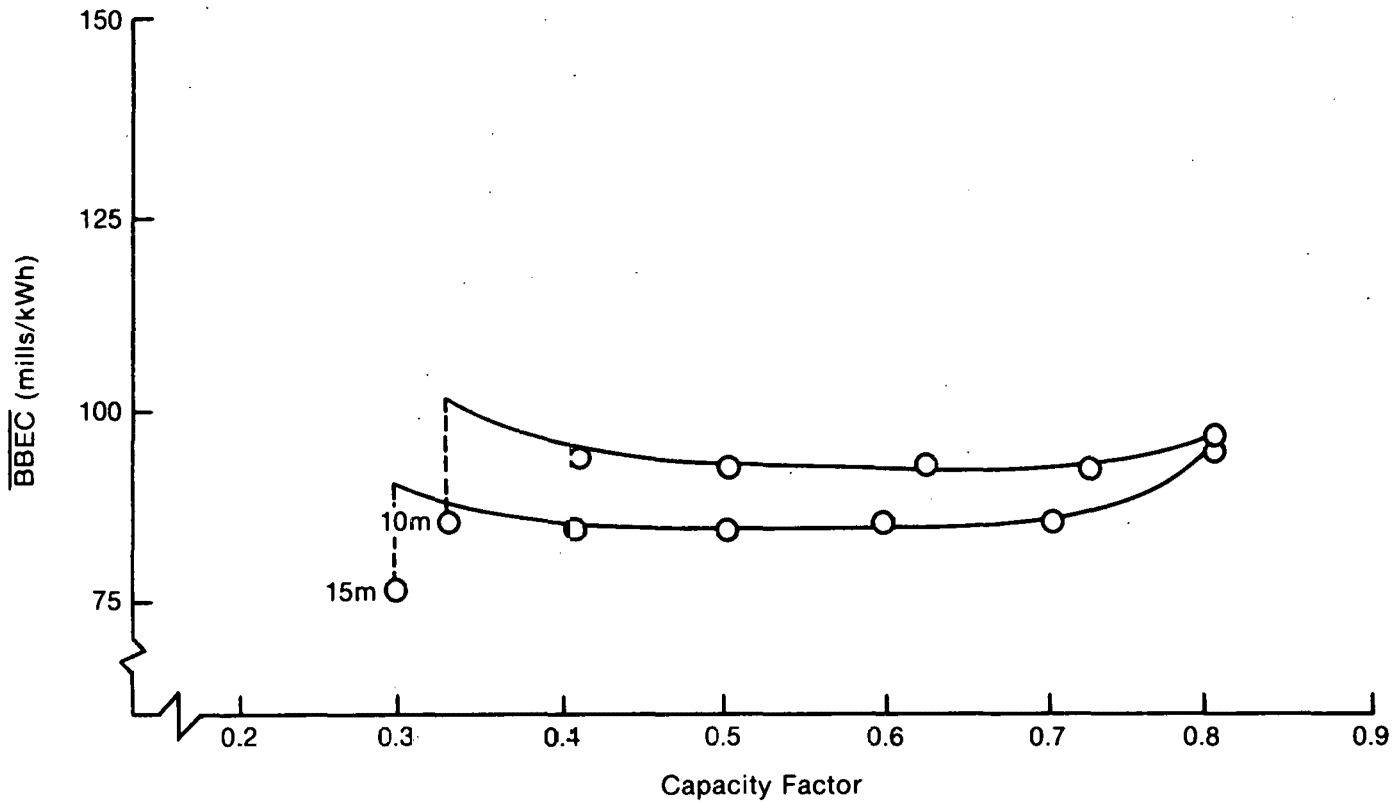

Figure 4-13. Effect of Dish Diameter on Levelized Annual Energy Cost, (PFDR/S, 1 MW_e)

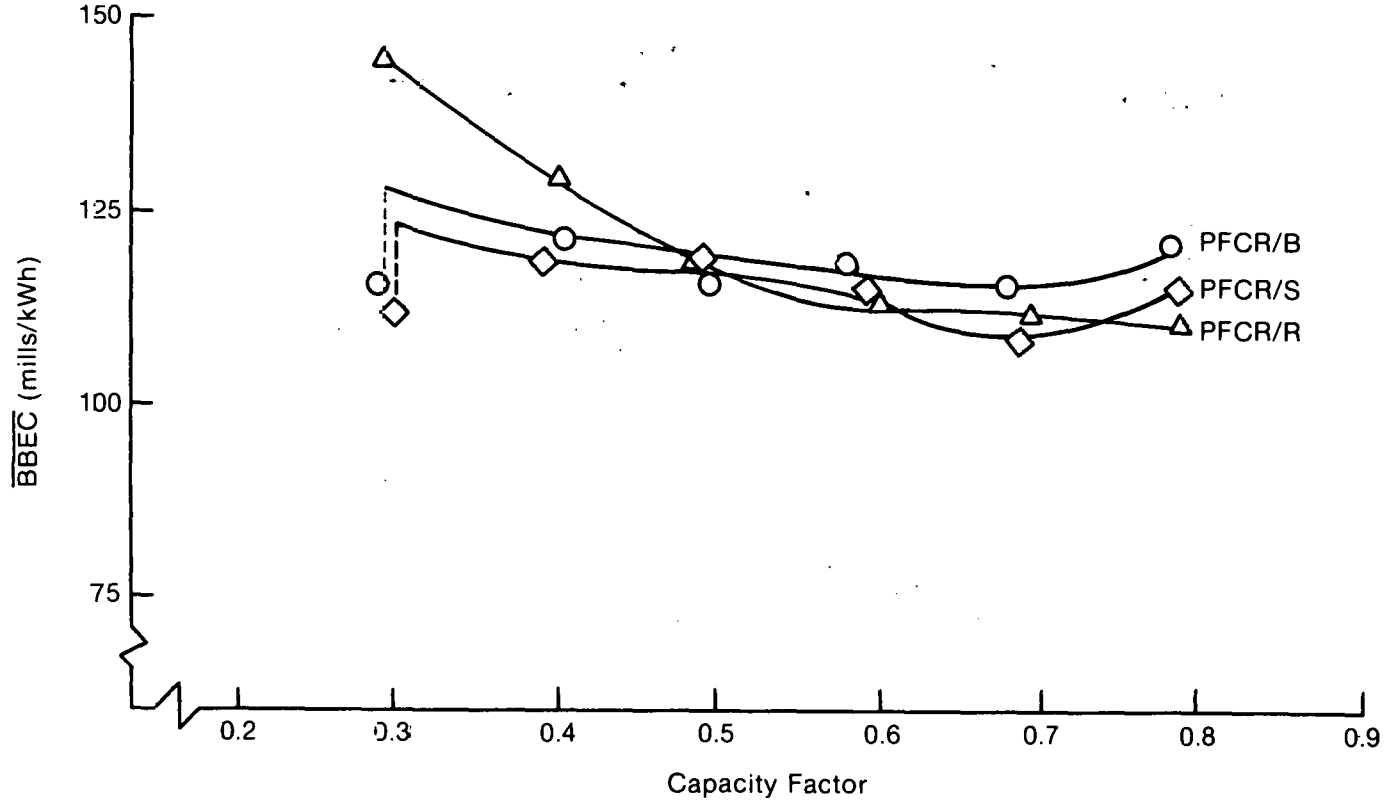

Figure 4-14. Levelized Annual Energy Costs as a Function of Capacity Factor for PFCR Systems (0.3 MW_e)

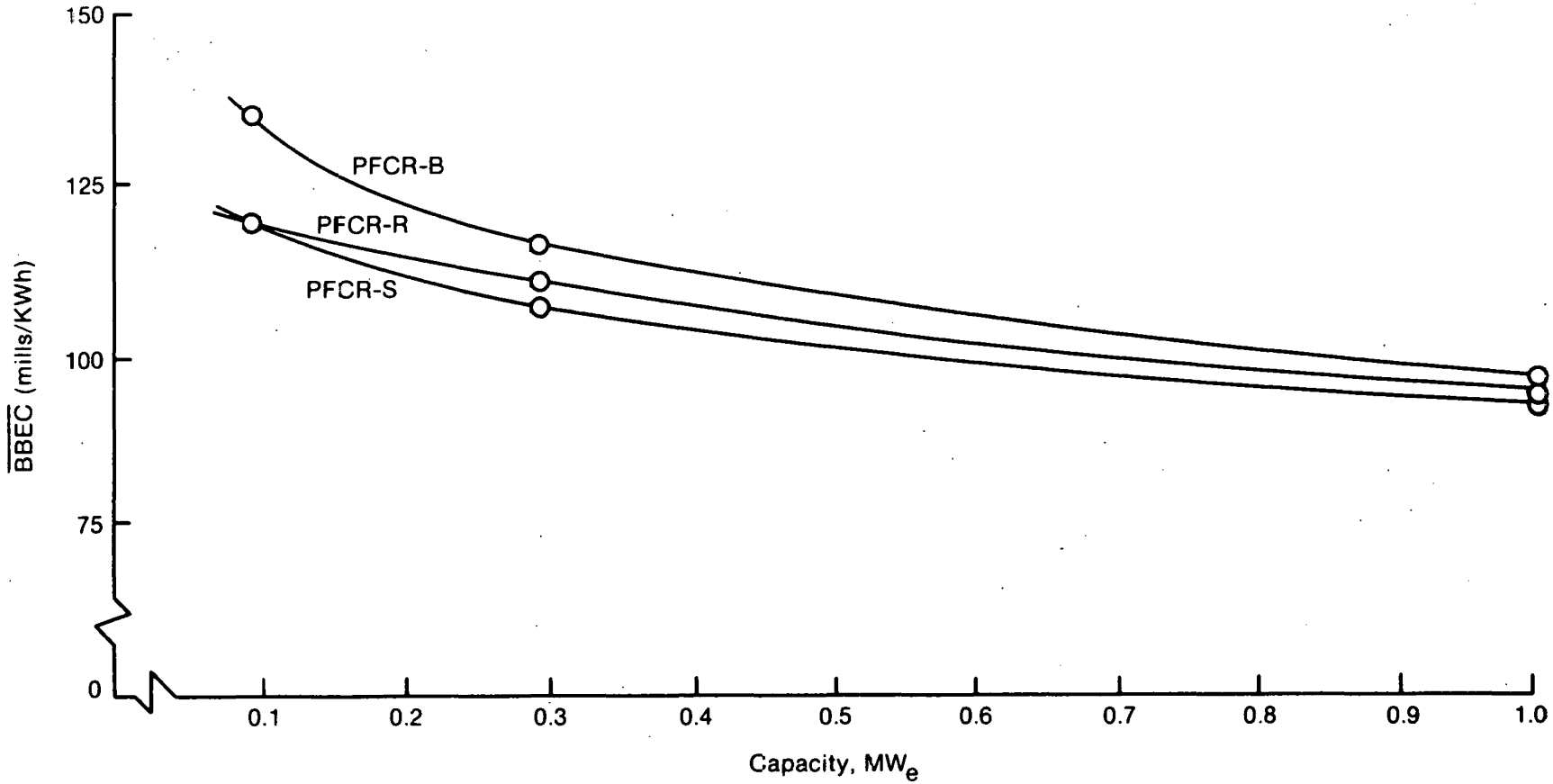

Figure 4-15. Levelized Annual Energy Costs as a Function of Capacity for PFCR Systems (Optimum Capacity Factors)

Table 4-9. **TYPICAL SIMPLE PAYBACK PERIOD FOR 0.1-1 MW_e INDUSTRIAL SYSTEMS**
(0.3 MW_e, Best Capacity Factor)

System	Simple Payback, Yrs
PFDR/S	5.8
PFDR/B	7.2
PFCR/S	8.3
PFCR/B	9.5
PFCR/R	8.6
PFDR/R	9.7
PFDR/CR	8.7
LFDR-TC	10.3
LCNT	10.8
FMDF	11.1

4.3 SUMMARY OF MADA RANKING RESULTS

This section presents the results of ranking small solar thermal electric power systems by the MADA process. The ranking reflects the preferences of decision makers obtained through an interview designed to gather information from which to model the decision process.

4.3.1 Conclusions of the Decision Analysis

The major findings of the decision analysis are:

- The 10 systems fall into three distinct groups, each separated by a significant difference in user preference.
- The groupings are consistent across wide ranges of uncertainty.

The PFDR/S system is the highest ranked system from every point of view tested. The lowest ranked group of systems are three line-focus systems—LFDR-TC, FMDF, and LCNT. The remaining systems lie in a group between categories I and III and rank in this order: PFDR/B, PFCR/S, PFCR/B, PFCR/R, PFDR/R, and PFDR/CR.

Ranking within this large middle ground of Group II is dependent upon:

- The relatively low efficiencies of the central generating plant and field for the central receiver at small capacities, which cause those systems to rank somewhat lower;
- The relatively high and constant efficiencies of the parabolic dish and Stirling engine over the full capacity range; and
- The importance of capacity factor to certain users, causing systems with thermal storage to rank higher than those with electrical storage.

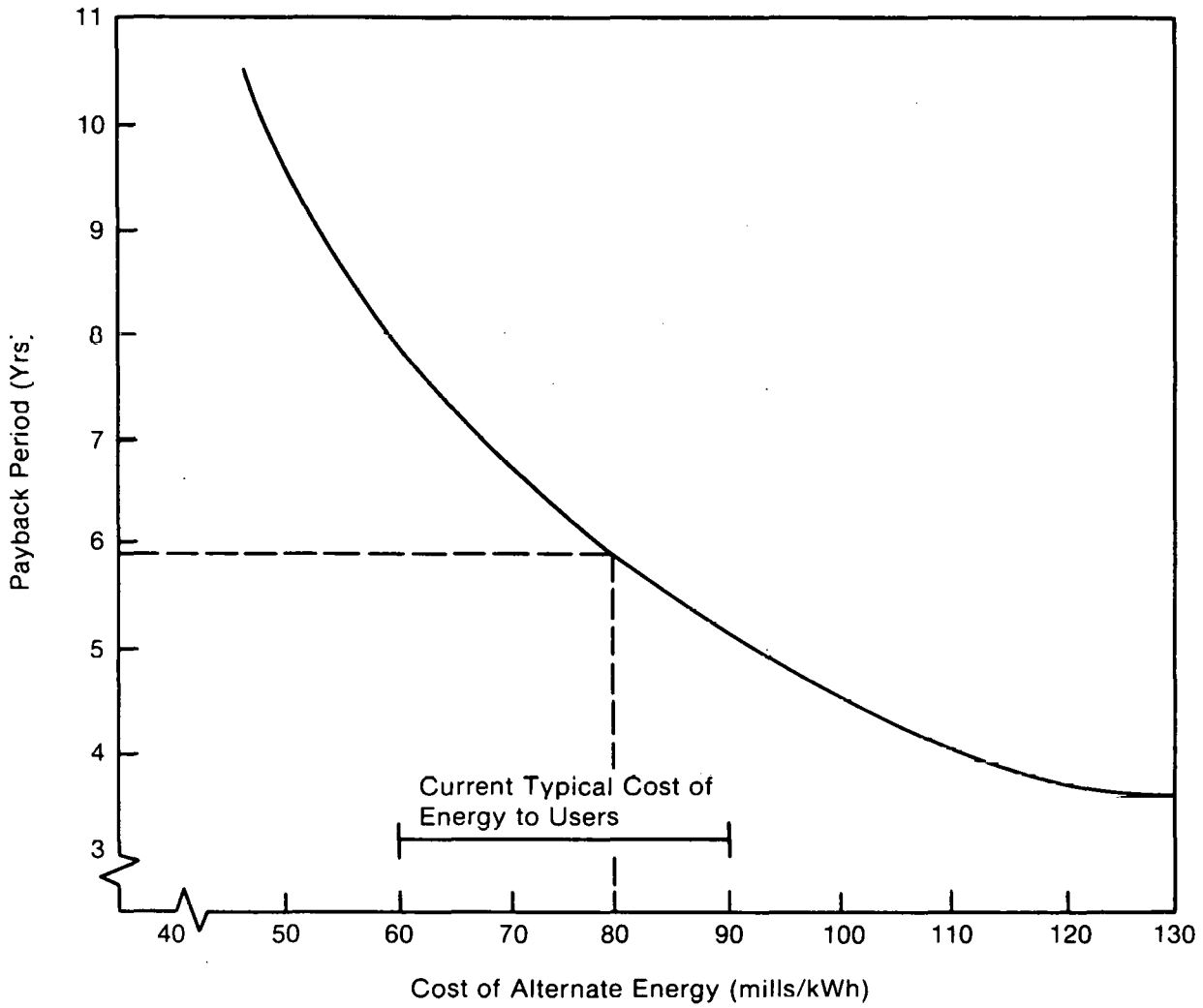

Figure 4-16. Variation of Simple Payback Period as a Function of Cost of Energy from Alternate Sources (PFDR/S, 0.3 MW_e, 0.3 CF)

Table 4-10. ECONOMIC SCENARIOS USED IN SENSITIVITY STUDY

Scenario	τ	k_d	D/V	k_c	C/V	k_p	P/V	g	β_1	β_2	g_c	g_{om}	ITC	DPF	Life (years)	$\overline{BBEC}$ (mills/kWh)
Baseline	0.40	0.08	0.50	0.112	0.50	0.1	0	0.06	0.02	0.0225	0.06	0.07	0	SL	30	76
Minerals	0.59	0.15	0.30	0.20	0.70	0	0	0.06	0.02	0.0225	0.06	0.07	0	SYD	10	117
Industry	0.50	0.10	0.30	0.15	0.70	0	0	0.06	0.02	0.0225	0.06	0.07	0.20	SYD	8	66
Small Community	0	0.07	1.0	0	0	0	0	0.06	0	0	0.06	0.07	0	—	30	49

where τ = Effective Income Tax Rate
k_d = Annual Rate of Return on Debt
D/V = Ratio of Debt to Total Capitalization
k_c = Annual Rate of Return on Common Stock
C/V = Ratio of Common Stock to Total Capitalization
k_p = Annual Rate of Return on Preferred Stock
P/V = Ratio of Preferred Stock to Total Capitalization
g = Rate of General Inflation
β_1 = Annual "Other Taxes" as a Fraction of Capitalization
β_2 = Annual Insurance Premiums as a Fraction of Capitaliz.
g_c = Escalation Rate for Capital Costs
g_{om} = Escalation Rate for Operating Costs
ITC = Investment Tax Credit
DPF = Method of Depreciation
SL = Straight Line
SYD = Sum-of-the-Years' Digits

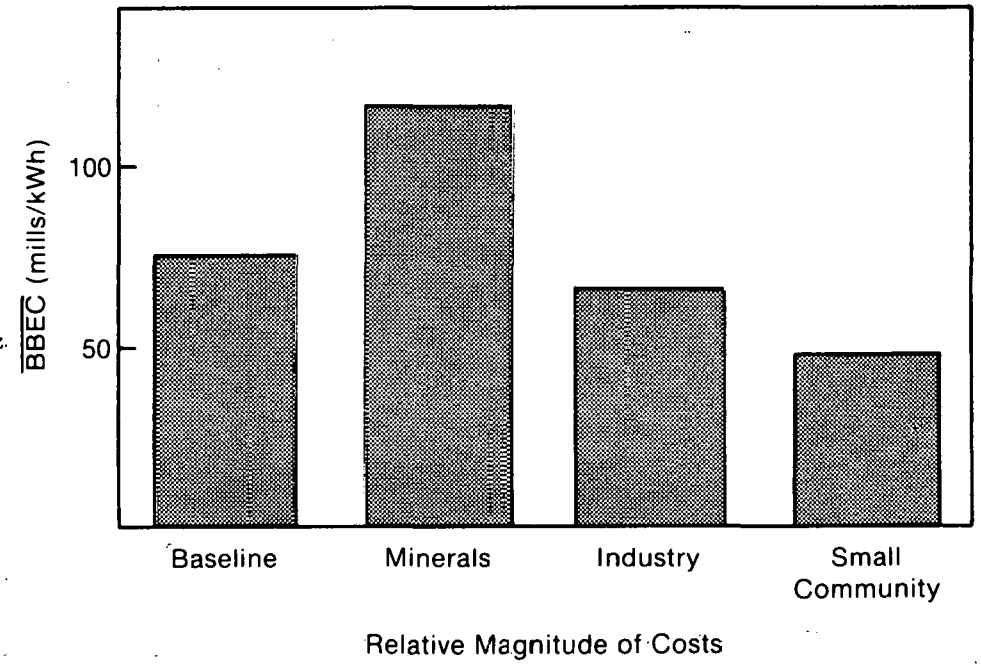

Other significant findings include:

- Given user need, large capacity options (1 MW_e) consistently rank higher than smaller sizes for the same system;
- With the exception of small municipal utilities, smaller capacity factors are preferred by decision makers; i.e., they will usually not pay for higher storage capacity;
- Moderate variations in system capital costs do not significantly affect the overall ranking of options; and
- Payback is the most important attribute in the user's evaluation of competing electrical power systems.

4.3.2 Problem Structure and Participating Decision Makers

The decision criteria and their descriptive attributes were structured only after an initial examination of system data and preliminary decision maker conferences. The data examination helped to establish a list of potential criteria and attributes. The user conferences were then held to reduce the list to the important criteria and to ensure that the attributes were appropriate measures and were well understood by decision makers (users) and the decision analyst. Three attributes were chosen to describe the systems: capital cost, simple payback, and capacity factor. The problem structure leading to these choices is defined in Fig. 4-17. The relation of this structure to the decision analysis method is defined in Appendix D and contrasted with the structure used in the 1-10 MW_e analysis.

The problem structure is defined not only by the systems to be examined and the results sought, but also by the interaction with the prospective users. Because the systems develop a maximum of 1 MW_e of power, most utilities were not interested in purchasing or using them. Municipal utilities in small communities, however, found these systems to be potentially useful. The users that SERI found interested in 0.1 to 1 MW_e power systems and subsequently interviewed include:

- Small Communities/Municipal Utilities
- Agriculture
- Small Government Institutions
- Military Bases
- Minerals Industry

Eighteen interviews including pretests were conducted to establish not only formal decision-maker preferences, but also to define the electrical needs of users and any constraints on their power supply. This additional information helped to validate the results of the system rankings (Appendix E includes a detailed profile of the decision makers). Members of the R&D community were also interviewed.

4.3.3 System Rankings

This section presents the base case ranking derived from the analysis of each decision maker's preference scores. This ranking is then viewed from two additional perspectives: a ranking by user category and a ranking by system size (0.1, 0.3, and 1 MW_e).

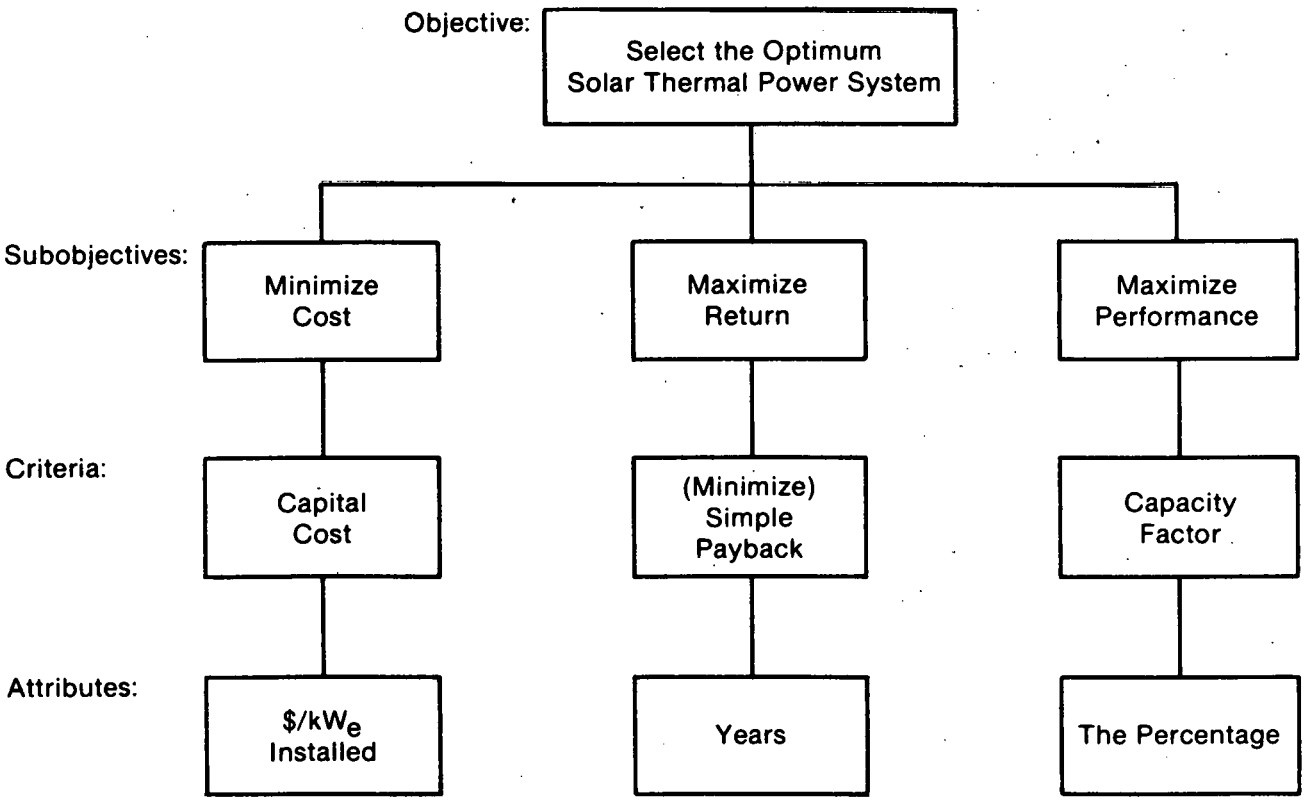

Figure 4-17. Problem Structure (0.1-1 MW_e Evaluation)

These two concepts are also combined to rank the systems by user category under certain constraints.

The ranking uses the decision model to translate the system data into an ordered ranking of the ten candidate systems. For each system, three capacities, 0.1, 0.3, and 1 MW_e, were examined at each of six capacity factors, 30%, 40%, 50%, 60%, 70%, and 80%. Thus, an evaluation of eighteen variations of each of the ten generic systems yielded a total of 180 options.

The overall ranking given in Table 4-11 was obtained by ordering the values of overall preference scores for each system. Because one system may perform better at a high capacity factor and another at a lower capacity factor, this approach allows each system to be ranked according to its strongest performance among the allowed capacity/capacity factor options. This ranking, a consensus of the fourteen viewpoints sampled, with each opinion weighted equally, is divided into three groups because of significant preferences among the groups. The first group consists of the PFDR/S system, which is preferred over all other systems. The second group includes the remaining point-focus receivers. Within this group no system is greatly superior to the system just below it, but the higher ranked systems are definitely preferred by the decision makers to the lower ranked ones. The line-focus systems, LFDR-TC, FMDF, and LCNT, rank in the lowest group because the users judged them to be significantly inferior to the first and second groups.

Table 4-12 lists the capacity and capacity factor of the highest rated option of each system. Some of the system options were not considered because of capital costs that fell outside the acceptable range. Many users felt that although payback period is important, investment capital is difficult to obtain; they therefore set $4000/$kW_e$ as the upper limit to capital cost. Figure 4-18 shows the relative preference scores of the highest ranked option of each system.

Table 4-11. FINAL OVERALL RANKING OF 0.1-1 MW_e SYSTEMS FOR INDUSTRIAL APPLICATIONS

Group	Rank	System
I	1	Parabolic dish collectors with distributed Stirling engines (PFDR/S)
II	2	Parabolic dish collectors with distributed Brayton engines (PFDR/B)
	3	Point-focus central receiver with Stirling power conversion (PFCR/S)
	4	Point-focus central receiver with Brayton power conversion (PFCR/B)
	5	Point-focus central receiver with Rankine power conversion (PFCR/R)
	6	Parabolic dish collectors with distributed Rankine engines (PFDR/R)
	7	Parabolic dish collectors with central Rankine power conversion (PFDR/CR)
III	8	Parabolic trough system (LFDR-TC)
	9	Fixed mirror, distributed focus bowl system (FMDF)
	10	Low concentrating, nontracking CPC system (LCNT)

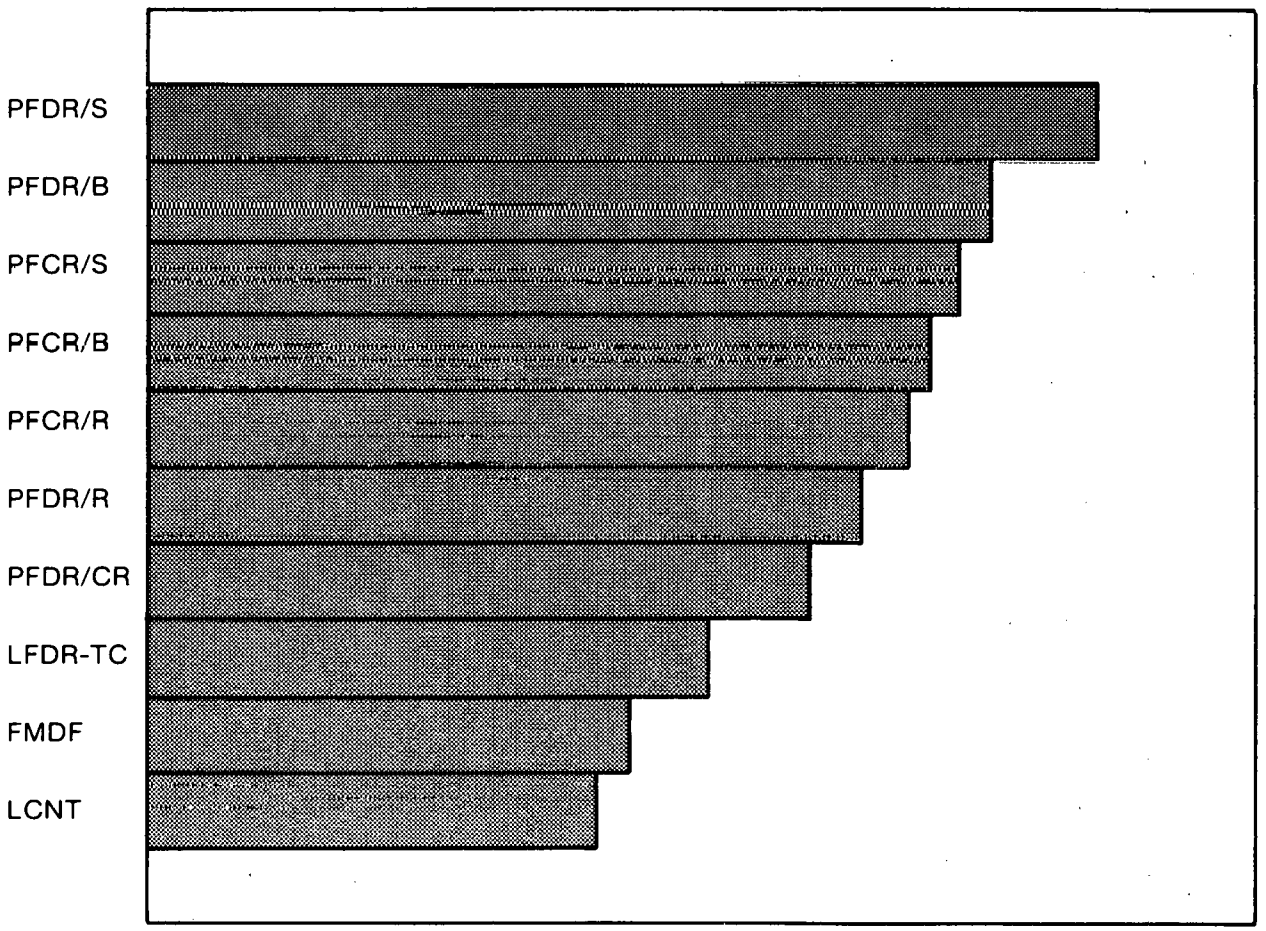

Figure 4-18. Relative System Preference Scores

Table 4-12. HIGHEST RATED SYSTEM VARIATIONS

System	Highest Rated Variation	
	Size	Capacity Factor
PFDR/S	1 MW_e	0.5
PFDR/B	1 MW_e	0.3
PFCR/S	1 MW_e	0.3
PFCR/B	1 MW_e	0.3
PFCR/R	1 MW_e	0.7
PFDR/R	1 MW_e	0.3
PFDR/CR	1 MW_e	0.4
LFDR-TC	1 MW_e	0.3
FMDF	1 MW_e	0.4
LCNT	1 MW_e	0.5

Table 4-13. RANKINGS BY USER CATEGORY

Small Community	Military Bases	Institutions	Agriculture	Minerals Industry
PFDR/S	PFDR/S	PFDR/S	PFDR/S	PFDR/S
[a]				
PFCR/R } [b]	PFDR/B	PFDR/B	PFDR/B	PFDR/B
PFCR/S } [b]	PFCR/S	PFCR/S	PFCR/S	PFCR/S
PFCR/B	PFCR/B	PFCR/B	PFCR/B	PFCR/B
PFDR/CR	PFDR/R	PFDR/R }	PFDR/R	PFCR/R
PFDR/B	PFCR/R }	PFCR/R }	PFCR/R }	PFDR/R
PFDR/R	PFDR/CR }	PFDR/CR	PFDR/CR }	PFDR/CR
LFDR-TC	LFDR-TC	LFDR-TC	LFDR-TC	LFDR-TC
FMDF	FMDF	FMDF	FMDF	FMDF
LCNT	LCNT	LCNT	LCNT	LCNT

[a]Shows significant gap in ranking.
[b]Indicates virtual tie.

Table 4-13 depicts the system ranking for each of the user groups. The horizontal lines indicate distinct gaps in the ranking and the brackets show virtual ties. The rankings do not vary much from the base ranking: the PFDR/S system remains the best for all user groups, and the line-focus systems remain at the bottom. However, there are often significant variations among the middle-ranked systems. The second-ranked system, PFDR/B, drops to sixth place for small communities and reflects the combination of preference for high capacity factors and disutility for costly electrical storage. Conversely, the PFCR/R system rises to the second position for small communities because of its relatively cheaper thermal storage. The PFDR/CR system, which also has thermal storage, also rises.

Another useful perspective on the base case is offered by ranking the system options at each of the three capacities. Because the base ranking revealed that the most preferred option of each system occured at 1 MW_e*, little information is provided about the preferences of those who must use smaller capacities. Table 4-14 shows the best ranked option of each system as capacity varies. The 1 MW_e ranking is identical to the base ranking. Two trends are apparent at smaller sizes: the PFDR/CR system becomes relatively more attractive and the PFCR/B, relatively less attractive. At 0.1MW_e, the PFDR/CR system becomes the third best option, but drops at the larger sizes because its costs do not fall as rapidly as those of other systems.

At all system sizes, the top two systems (PFDR/S and PFDR/B) and the bottom three systems, LFDR-TC, FMDF, and LCNT, remain in the same positions. Other systems made slight position shifts that reflect the closeness of the systems in Group II.

The question emerges as to whether it is valid to allow all systems, regardless of size, to be eligible for all users since user requirements differ. In response to this question, another type of ranking was developed. Each user group defined both the capacity and

Table 4-14. OVERALL RANKING BY SYSTEM CAPACITY

Rank	1 MW_e	0.3 MW_e	0.1 MW_e
1	PFDR/S	PFDR/S	PFDR/S
2	PFDR/B	PFDR/B	PFDR/B
3	PFDR/CR	PFCR/S	PFCR/S
4	PFCR/S	PFDR/CR	PFCR/B
5	PFDR/R	PFCR/B	PFCR/R
6	PFCR/R	PFDR/R	PFDR/R
7	PFCR/B	PFCR/R	PFDR/CR
8	LFDR-TC	LFDR-TC	LFDR-TC
9	FMDF	FMDF	FMDF
10	LCNT	LCNT	LCNT

*The dominance of the 1 MW_e systems occurs because larger sizes exhibit significantly shorter paybacks (the dominant attribute) and not because all user groups preferred the larger sizes.

the minimum capacity factor needed (see Table 4-15). These constraints do not necessarily imply, for example, that systems larger than the 0.3MW$_e$ system would not be considered for some agricultural applications. The constraints only indicate specific requirements for specific users. Summarized in Table 4-16, the results are almost identical

Table 4-15. SAMPLE USER CONSTRAINTS

User Group	Constraints[a]	
	System Size	Minimum Capacity Factor
Small Community	1 MW$_e$	50%
Military	1 MW$_e$	None
Institutions	0.1-0.3 MW$_e$	None
Agriculture	0.1-0.3 MW$_e$	None
Minerals Industry	None	60%

[a]Apply to specific users interviewed, not to industries as a whole

Table 4-16. USER CATEGORY RANKINGS INCORPORATING USER CONSTRAINTS

Small Community	Military Bases	Institutions	Agriculture	Minerals Industry
PFDR/S	PFDR/S	PFDR/S	PFDR/S	PFDR/S
PFCR/R[a]	PFDR/B	PFDR/B	PFDR/B	PFCR/S
PFCR/S	PFCR/S	PFCR/S	PFCR/S	PFCR/R
PFDR/B	PFCR/B	PFCR/B	PFCR/B	PFDR/B
PFCR/B	PFDR/R	PFDR/R	PFDR/R	PFCR/B
PFDR/CR	PFCR/R	PFDR/CR	PFDR/CR	PFDR/CR
PFDR/R	PFDR/CR	PFCR/R	PFCR/R	LFDR/TC
LFDR-TC	LFDR-TC	LFDR-TC	LFDR-TC	PFDR/R[b]
FMDF	FMDF	FMDF	FMDF	FMDF[b]
LCNT	LCNT	LCNT	LCNT	LCNT[b]

[a]Indicates significant gap in ranking

[b]No system option satisfactory

to those indicated in Table 4-13, in which the ranking is not constrained by limitations on capacity or capacity factor. The notable exception occurs for the mineral industry user.

For this ranking, systems using thermal storage improve relative to those using electrical storage because of the 60% minimum capacity factor constraint. For the PFDR/R, FMDF, or LCNT systems, no high capacity factor option had a capital cost within the acceptable range; therefore, none of these three systems was included in the ranking.

4.3.4 Sensitivity Analysis

System rankings require two categories of input data that are associated with significant uncertainty. Data used in constructing the decision model (user inputs) were taken from interviews with decision makers in which hypothetical decision choices were faced, introducing uncertainty in model. System cost and performance data used to assign attribute preference scores were based on projections for hardware to be installed in the 1990s. The accuracy of these projections varies depending on the state of development of each type of system. Consequently, sensitivity of the rankings to data uncertainty is crucial. This section discusses the sensitivity analyses performed and the variations in ranking because of system attribute value uncertainty and user input uncertainty.

Sensitivity from uncertainty in system attribute values was tested using the approach described in Section 3.3.3 for each system. Uncertainty ranges were established for each attribute (see Table 4-17). Each of the three attributes was alternately assigned the highest then the lowest probable values as determined from the uncertainty ranges. A synthetic decision maker was created for these values, derived by averaging the single attribute preference scores and weights for each of the fourteen decision makers. New system preference scores were calculated for these various extreme attribute values.*

The results of this analysis are depicted in Fig. 4-19. For each system the horizontal bars indicate the range of variation of total preference score; capital cost, capacity factor, and payback are assigned their worst and best values. Vertical lines passing through each bar indicate the most likely preference scores. The extended lines define the upper and lower bounds for the system preference scores as determined from the uncertainty ranges (shown in Table 4-17) for each of the systems.

The graph shows that the uncertainty of any single attribute will not raise or lower the preference score of a system enough to place it in the next higher or lower group of systems. Only two systems ranked in Group III (FMDF and LCNT) have higher preference scores than the lowest ranked members of Group II (PFDR/R and PFDR/CR). Our estimate of the subjective probability that Group III systems could have extremely low capital costs at the same time that Group II systems have extremely high costs is, however, quite low—less than 5%. On the other hand, ranking within a major group does vary as attribute values change.

The effect of uncertainty in the decision model input on the rankings was somewhat mitigated by the many individual interviews conducted and by the use of consensus rankings. The sensitivity of the rankings from this uncertainty was tested, however, using hypothetical decision makers with selected attribute scaling emphasis.

---

*The synthetic decision maker weighted the attributes as: payback, 0.44; capital cost, 0.28; and capacity factor, 0.28.

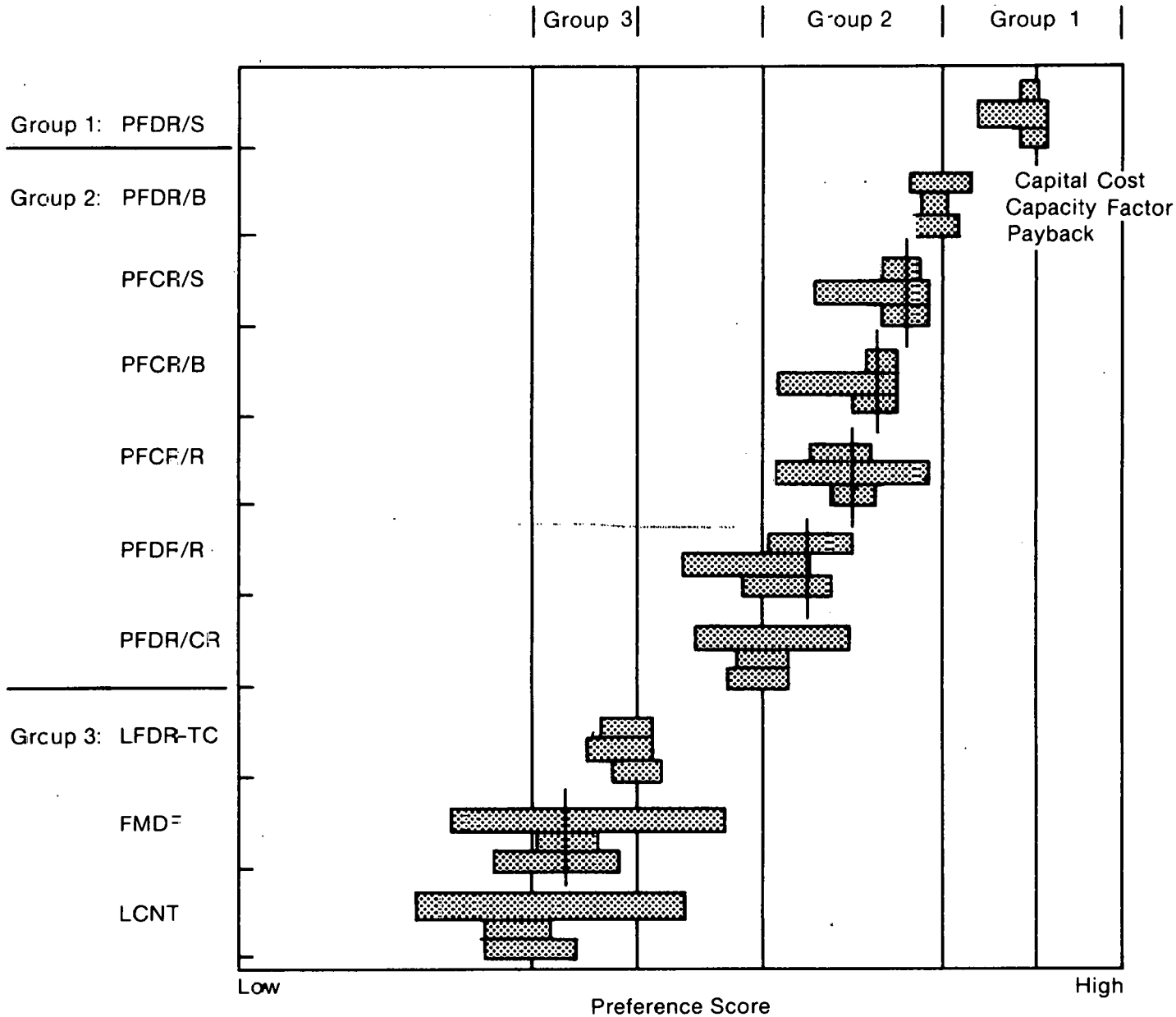

Figure 4-19. Effects of System Uncertainty on Rankings (0.1-1 MW_e)

The overall ranking given in Section 4.3.1 is based on the average preference scores of the 14 decision makers for each system and on a poll of individual ordinal rankings for the decision makers. There were minor variations in the rankings derived from individual decision makers compared to these averages, particularly with respect to the order of systems within Group II. An effective way of testing whether the decision-model input significantly affects the ranking is to hypothesize decision makers with extreme points of view and to use them to rank the systems. Four viewpoints were modeled: one stressed each of the three attributes almost to the exclusion of the other two, and one represented the relative indifference in which the three attributes are weighted equally. The weights for these decision makers are given in Table 4-18.

The rankings resulting from these hypothetical viewpoints are given in Table 4-19. The rankings are almost identical for all hypothetical decision makers except in cases for which capacity factor is heavily weighted. This effect is the same as that discussed

Table 4-17. ASSIGNED VALUE UNCERTAINTIES FOR 0.1-1 MW_e SYSTEMS

Factor	Capital Cost		Payback		Capacity Factor	
System	High	Low	High	Low	High	Low
PFCR/R	5[a]	-5	6	-6	10-10	
PFDR/S	10	-10	6	-6	5-5	
FMDF	25	-25	13	-13	10-10	
LFDR-TC	10	-5	6	-4	5-5	
LCNT	20	-20	8	-10	5-10	
PFCR/B	5	-5	6	-6	10-10	
PFDR/B	10	-20	6	-8	5-5	
PFDR/CR	15	-15	8	-8	5-5	
PFDR/R	10	-20	6	-8	5-5	
PFCR/S	10	-5	8	-6	10-10	

[a]Ranges are expressed as the percentage of variation from the nominal attribute value.

Table 4-18. VARIATION OF ATTRIBUTE WEIGHTS

	Assigned Attribute Weights				
Attribute	Base Case	Capital Cost	Payback Period	Capacity Factor	Equal Weight
Capital Cost	0.28	0.90	0.05	0.05	0.33
Pay Back Period	0.44	0.05	0.90	0.05	0.33
Capacity Factor	0.28	0.05	0.05	0.90	0.33

Table 4-19. EFFECT ON RANKINGS OF VARIATIONS IN ATTRIBUTE WEIGHTS

		Ranking				
	System	Base Case	Capital Cost	Payback Period	Capacity Factor	Equal Weight
Group I	PFDR/S	1	1	1	1	1
Group II	PFDR/B	2	2	2	4T[b]	2
	PFCR/S	3	3T	3T	6	3
	PFCR/B	4T[a]	3T	3T	4T	4
	PFCR/R	4T	6T	3T	2	5
	PFDR/R	6T	5	6T	8T	6
	PFDR/CR	6T	6T	6T	3	7
Group III	LFDR-TC	8	8	8	7	8
	FMDF	9	9T	9T	8T	9
	LCNT	10	9T	9T	8T	10

[a]T indicates virtual tie

previously for the small community user category. The ranking with emphasis on capacity factor shown in Table 4-19 is a significant variation from the baseline ranking. Three systems with electric storage, PFDR/B, PFCR/S, and PFDR/R, have dropped and three systems with thermal storage PFCR/R, PFDR/CR, and LFDR-TC, have risen in the rankings because:

- The stress on capacity factors causes options with higher capacity factors to be ranked highest for each system; and
- Thermal storage is more cost effective than electrical storage at higher capacity factors.

Even with these changes, the only shift between systems in the three major groups occurs when the LFDR-TC system moves ahead of the PFDR/R system and, thus, joins systems in Group II.

SECTION 5.0

COMPARISON OF 1-10 MW_e AND 0.1-1 MW_e RANKINGS

Because the systems considered during each phase of the study have been designed to meet the needs of particular users, it is difficult to compare the results of the 1-10 MW_e and 0.1-1 MW_e rankings. However, some trends and conclusions are significant.

5.1 COMPARISON OF BUSBAR ENERGY COSTS

The PFDR/S and PFCR/R systems show the greatest potential over the entire range of capacities. Figure 5-1 compares the performance of these systems over the full range of 0.1 MW_e to 10 MW_e.

At smaller sizes, the PFDR/S system is more cost effective than the PFCR/R for both 10-m and 15-m dish diameters because of the high efficiency of the Stirling engines at small sizes, and the high optical efficiency of the collectors. Central receiver systems suffer from reduced optical efficiencies at very small sizes. Additionally, the Rankine conversion system rapidly loses efficiency below 1 MW_e rated output.

The discontinuity at 1 MW_e for both systems results from the higher balance of plant costs associated with a utility than with an industrial user. A further difference resulted between the 0.1-1 MW_e and 1-10 MW_e PRDR/S systems because of the use of 15-m and 10-m dish diameters, respectively.

At larger sizes, the PFDR/S and PFCR/R systems rank more closely. The efficiencies of both the heliostat field and the Rankine conversion system for the PFCR/R system improve. For the baseline 10-m dish, a crossover point occurs between 5 MW_e and 10 MW_e beyond which the PFCR/R system shows the most promise. If a larger dish/engine combination such as a 15-m dish diameter were used for the PFDR/S system, the crossover point would occur at a higher capacity, which is shown by the dashed line in Fig. 5-1. The differences in BBEC between the systems are small, however, and further investigation is necessary to prove the effectiveness of increasing dish size to 15 m.

5.2 COMPARISON OF MADA RANKING RESULTS

The problem structure, and to a lesser extent, the ground rules, differ between the 1-10 MW_e and the 0.1-1 MW_e study. Nonetheless, the results of the two analyses can be compared to illustrate overall trends and differences among user groups and their preferences. Four areas of interest include: conclusions, attribute selection and weighting, overall ranking, ranking by system size.

5.2.1 Conclusions

Both studies indicate:

- The systems fall into three groups according to user preferences:
  - superior system(s),

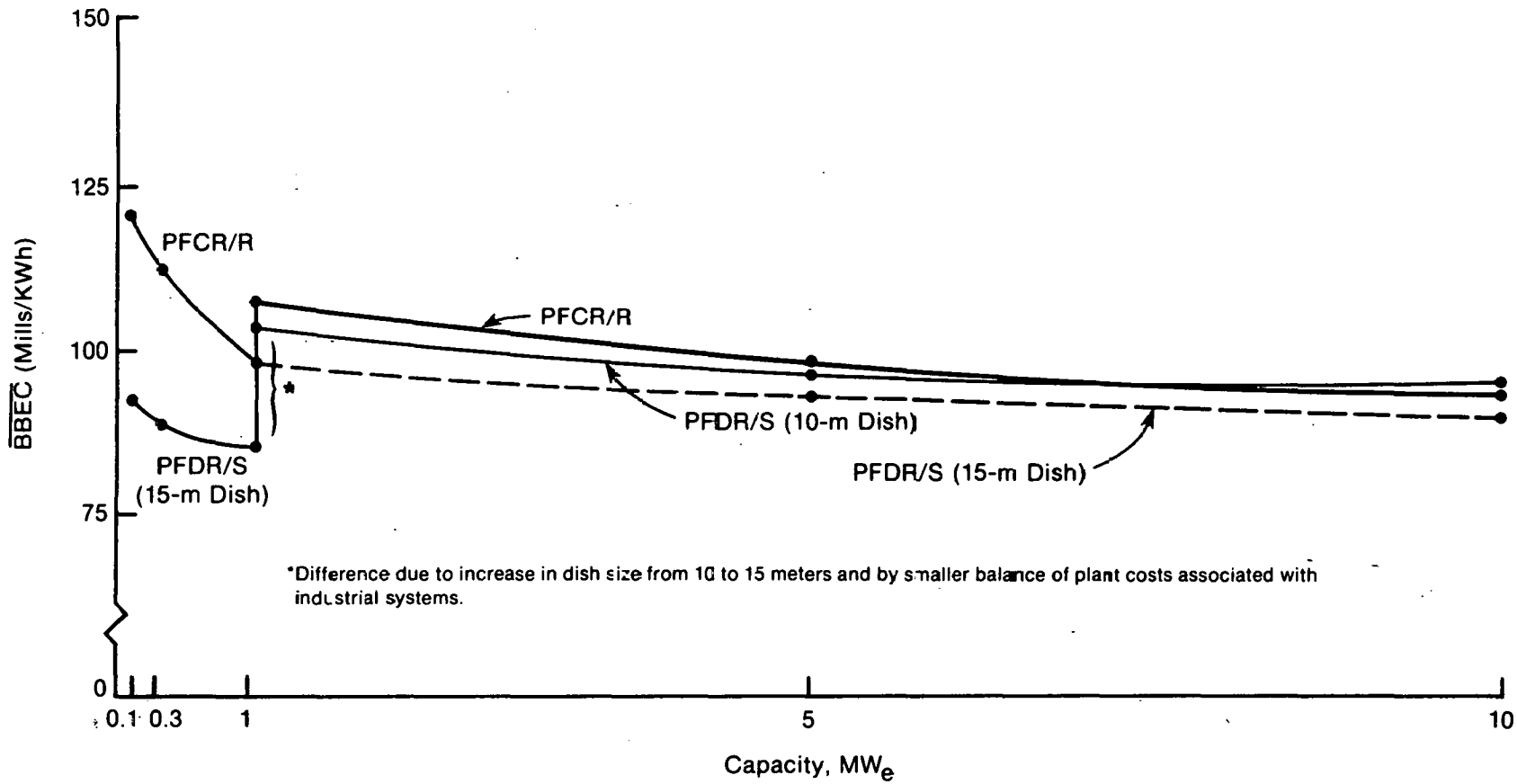

Figure 5-1. Comparison of Busbar Energy Costs for a Capacity Range of 0.1-10 MW_e for the PFDR/S and PFCR/R Systems (0.7 CF)

- large middle group, closely ranked, and
- inferior system(s);

- Sensitivity analyses show variation of ranking within the groups, but little variation from group to group;
- Large systems rank higher, but are not necessarily preferred (depending on user requirements): 10 MW_e in the 1-10 MW_e study and 1 MW_e in the 0.1-1 MW_e study primarily because of lower costs resulting from economies of scale; and
- Although capacity factor is important in both studies, cost-related attributes are more important; hence, the most preferred options usually have low capacity factors. Users often judge the cost of storage to be excessive.

5.2.2 Differences in Attribute Selection

Preliminary to each phase, the problem was structured to reflect important concerns of each user group. Electric utilities were the primary users for the 1-10 MW_e systems; smaller users whose main business was not power generation were a more appropriate market for the smaller systems. The difference in attributes between the two studies is discussed in Appendix D. Figure 5-2 contrasts the relative weighting of the top three attributes of each study.

5.2.3 Comparison of Overall MADA Rankings

Comparison of the overall rankings and ranking of the systems by size must be executed carefully because systems were added and deleted from one study to another and new data that was not available in the first phase was included in the 0.1-1 MW_e study. Variations in the ranking result from better performance at one capacity together with a shift in the relative value each user group placed on cost versus performance criteria. The two final rankings are compared in Table 5-1.

5.2.4 Comparison of Ranking by System Size

Trends not readily apparent in the overall ranking can be spotted when the systems are ranked at each of three capacities modeled in the two studies. The effects of the different systems and systems designs for the different applications can be seen when the two rankings of 1 MW_e systems are compared. Table 5-2 shows all six rankings by capacity. At first examination, two apparent discrepancies occur between the studies. The LFDR-TC and LCNT systems drop considerably at 1 MW_e capacity from the 1-10 MW_e study to the 0.1-1 MW_e study at the same capacity because:

- The LFDR-TR, LFCR, and SSP systems ranking low in the 1-10 MW study were dropped in the 0.1-1 MW_e study;
- The PFCR/S, PFDR/R systems ranking higher in the smaller system study were not rated in the larger study; and
- PFCR/B and PFDR/CR systems ranking lower in the 1-10 MW_e system study rank higher in the later study. Maintenance costs of the PFDR/CR system lowered its ranking in the 1-10 MW_e study, but these costs were less important to the smaller users.

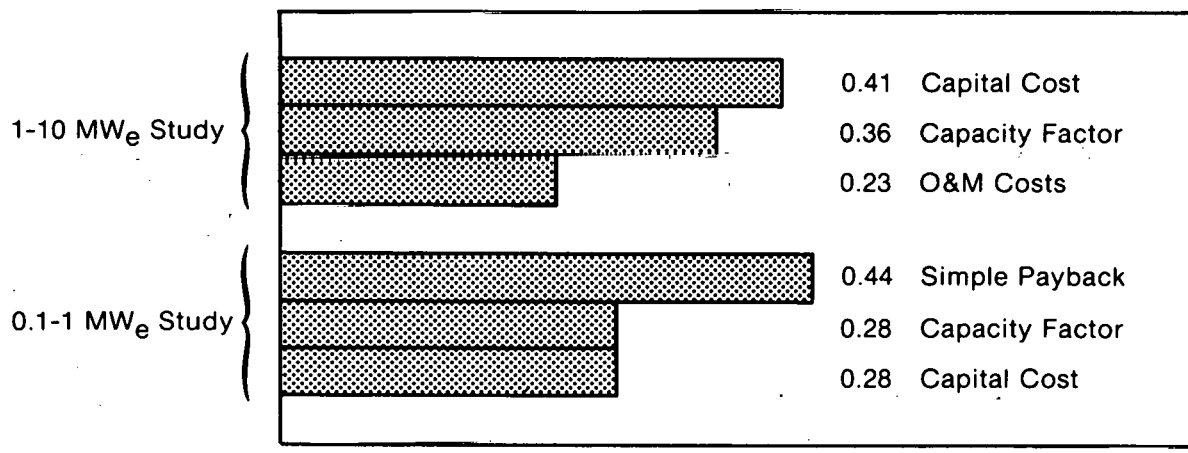

Figure 5-2. Attribute Comparison (Weights Normalized to 1.0)

Table 5-1. COMPARISON OF 1-10 MW_e AND 0.1-1 MW_e RANKINGS

1-10 MW_e (Utility)		0.1-1 MW_e (Industrial)	
Group I	PFCR/R PFDR/S	PFDR/S	Group I
Group II	PFDR/CR PFDR/B PFCR/B LFDR-TC LCNT	PFDR/B PFCR/S[b] PFCR/B PFCR/R PFDR/R[b] PFDR/CR	Group II
Group III	LFCR[a] FMDF LFDR-TR[a] SSP[a]	LFDR-TC FMDF LCNT	Group III

[a]Eliminated in 0.1-1 MW_e study.

[b]Added in 0.1-1 MW_e study.

Table 5-2. RANKING AS A FUNCTION OF SYSTEM CAPACITY

0.1-1 MW_e (Industrial)			1-10 MW_e (Utility)		
0.1 MW_e	0.3 MW_e	1 MW_e	1 MW_e	5 MW_e	10 MW_e
PFDR/S	PFDR/S	PFDR/S	PFDR/S	PFDR/S	PFCR/R
PFDR/B	PFDR/B	PFDR/B	PFDR/B	PFDR/B	PFDR/S
PFDR/CR	PFCR/S	PFCR/S	PFCR/R	PFCR/R	PFDR/CR
PFCR/S	PFDR/CR	PFCR/B	LFDR-TC	LFDR-TC	PFDR/B
PFDR/R	PFCR/B	PFCR/R	LCNT	PFCR/B	PFCR/B
PFCR/R	PFDR/R	PFDR/R	PFCR/B	LCNT	LFDR-TC
PFCR/B	PFCR/R	PFDR/CR	PFDR/CR	PFDR/CR	LCNT
LFDR-TC	LFDR-TC	LFDR-TC	FMDF	LFDR-TR	LFCR
FMDF	FMDF	FMDF	LFDR-TR	FMDF	FMDF
LCNT	LCNT	LCNT	LFCR	LFCR	LFDR-TR
			SSP	SSP	SSP

The only trend in the rankings shows central receivers ranking better at larger sizes, i.e., as their optical and conversion efficiencies increase; therefore, the distributed receiver systems drop slightly at larger sizes.

SECTION 6.0

REFERENCES

1. Thornton, J. et al. Small Power Systems Study Quarterly Report No. 1. SERI-36. Golden, CO: Solar Energy Research Institute; 1 July 1978.

2. Thornton, J. et al. Comparative Ranking of 1-10 MW_e Solar Thermal Electric Power Systems. SERI/TR-35-238. Golden, CO: Solar Energy Research Institute; September 1979.

3. Doane, J. W. et al. The Cost of Energy from Utility-Owned Solar Electric Systems. JPL 5040-29. Pasadena, CA: Jet Propulsion Laboratory; June 1976.

4. Keeney, R. L.; Raiffa, H. Decisions with Multiple Objectives: Preferences and Value Tradeoffs. New York, NY: John Wiley & Sons; 1976.

5. Roberts, Fred S. Discrete Mathematical Models. Englewood Cliffs, NJ: Prentice-Hall, Inc.; 1976, pp. 424-429.

6. Keeney, R. L.; Nair, K. Evaluating Potential Nuclear Power Plant Sites in the Pacific Northwest Using Decision Analysis. Luxenburg, Austria: International Institute for Applied System Analysis; 1976, pp. 76-1.

7. Ford Aerospace and Communications Corporation. Phase I of the First (Solar) Small Power System Experiment (Experimental System No. 1) Final Report. U-6529. FACC, Aeronutronic Division; Newport Beach, CA; May 1979.

Blank

APPENDIX A

SYSTEM COST AND PERFORMANCE SUMMARIES

One of the most critical and difficult tasks has been to project the mid-1990 costs and performance of advanced subsystems and components, considering expected technology advances and the effects of mass production. System and O&M costs together with performance are combined in an economic scenario to provide levelized annual energy cost (mills/kWh).

The relatively undeveloped state of most solar equipment today and the lack of large-scale production precludes the use of prices of current solar hardware which would result in unrealistically high capital and levelized energy costs for 1990. Therefore, a different technique of estimating costs was used. Cost data came from various sources including direct quotes from manufacturers, estimates by consultants, reports and technical papers from contractors and other laboratories, comparisons with established costs, and SERI-independent estimates.

A.1 BASELINE COST ASSUMPTIONS

For a given component or system, all available cost estimates were assembled from written sources. Adjustments were made for contingency, etc., so that all estimates were on a common basis. From this range of costs, estimates were constructed for the baseline systems that: (1) would have reasonable expectation of being achieved by mid-1990, (2) assumed varying degrees of mass production, depending upon the number of components per system, (3) were substantiated through documentation or analysis, (4) were dependent upon R&D already in progress, and (5) were based upon the necessity for making a near-term commitment to develop more promising systems at the expense of others. These cost estimates were not based upon either the goal or value of the system or the ultimate cost and performance potential of any technology. Neither the most optimistic nor the most conservative cost estimates for any system or component were used for the baseline calculation of either capital cost or BBEC. Where resulting costs differed greatly from similar costs for other systems, they were independently reviewed and verified by SERI.

The resulting capital and O&M costs were used as inputs to the economic simulation in BALDR-1. Appendix B describes this simulation and its use.

A.2 COST AND PERFORMANCE SUMMARIES

Tables A-2 through A-13 and A-14 through A-31 provide cost and performance summaries for the 1-10 MW_e utility and the 0.1-1 MW_e industrial cases, respectively, for the full range of capacity factors. These summary data are derived from the final results of the computer simulations.

The tables are organized first by capacity, then by capacity factor, so that comparisons can be made between systems. The capacity factor, as used throughout the report, represents the total amount of electrical energy produced for the full year divided by the amount of energy that would be produced if the plant operated at rated capacity for the entire year.

A brief explanation of each of the factors in the tables is provided below. Descriptions of the baseline generic systems, which the summarized data represent, are contained in Sections 3.1 and 4.1.

A.2.1 Generic System

For simplicity, generic systems are referred to in the tables by acronyms. Acronyms for the systems are described in Table A-1.

A.2.2 Performance Factors

The collection subsystem efficiency is a total annual average field efficiency including effects of field layout, collector characteristics and physical dimensions, and receiver losses, expressed as an annual average efficiency. Transport Subsystem Efficiency represents the annual average efficiency of the thermal or electrical transport subsystem assuming an ambient temperature of 20° C. The storage subsystem efficiency represents annual average efficiency of thermal or electrical storage and takes into account any energy that must be wasted if storage is absent or if capacity is exceeded. Conversion subsystem efficiency includes engine and generator efficiencies for an annual average efficiency. Finally, the annual average system efficiency is presented for each case. To determine the system efficiency, a thermal capacity factor is found by dividing the average thermal power collected by the plant rated capacity. Then dividing the electrical capacity factor by this thermal capacity factor, one obtains an overall thermal-to-electrical efficiency that includes engine and generator, auxiliaries, and power conditioning equipment. This efficiency is multiplied by the field efficiency and the transport efficiency for an overall system efficiency.

The engine or turbine efficiency represents the performance expected at full-load operation. Part-load characteristics were used in the computer simulation for each type of engine to simulate performance when sufficient energy was not available from the balance of the system to meet rated output.

A.2.3 Cost Factors

The economic summary of each case is presented on the second half of each summary table. Capital costs for subsystem components are given on a unit basis. The unit costs for concentrator and receiver are given in $\$/m^2$ of collector area except for the troughs, CPC, and shallow solar ponds. In these cases, receiver and concentrator costs are combined. For the central receiver systems, riser and downcomer and tower costs are included in receiver cost. The transport cost represents the cost for thermal or electrical transport as appropriate for each system. The storage cost is broken down into energy and power-related components and represents cost of electrical or thermal storage (either $\$/kW_t$ and $\$/kW_t h$ or $\$/kW_e$ and $\$/kW_e h$, as appropriate) for each system. Conversion subsystem cost includes engine and generator cost. Balance of plant includes cooling towers, pumps, control system, buildings, and any necessary site work and power conditioning equipment.

A.2.4 Resultant Costs

The total capital cost of the system is presented in 1978 dollars. Levelized operation and maintenance costs are given in mills/kWh. Finally, $\overline{BBEC}$ is given in mills/kWh.

A.2.5 Actual Capacity Factor

This factor represents the actual capacity factor upon which the plant costs are based. Many combinations of total collector area and storage capacity were studied to determine the plant configuration which would yield the lowest busbar energy cost for a given rated output and approximate desired capacity factor. The actual capacity factors differ widely among the systems in Tables A-11 through A-13. The plants represented in these tables were selected as the combination of collector area and storage size which yielded the minimum $\overline{BBEC}$, regardless of its associated capacity factor. Systems were ranked by $\overline{BBEC}$ alone and in combination with other attributes. The two rankings were consistent.

A.3 COST SENSITIVITY STUDIES

Because the assignment of costs for the baseline calculations of capital cost were dependent upon engineering judgement, the sensitivities of the rankings to variations in cost were tested. The method governing these sensitivity tests, as well as the effects of the results on the rankings, are described in Sections 3.3 and 4.3 for 1-10 MW_e and 0.1-1 MW_e systems, respectively.

Table A-1. SYSTEM NOMENCLATURE

Acronym	System
FMDF	Fixed-mirror distributed focus collector; a fixed hemispherical bowl with a two-axis tracking linear receiver.
LCNT	Low concentration nontracking collector such as a CPC.
LFCR	Line-focus central receiver system, composed of one-axis tracking heliostats and a tower-mounted linear receiver.
LFDR-TC	Line-focus distributed receiver wherein the entire collector tracks, such as a conventional parabolic trough collector.
LFDR-TR	Line-focus distributed receiver wherein only the receiver tracks.
PFCR/B	Point-focus central receiver with Brayton power conversion.
PFCR/R	Point-focus central receiver with Rankine-cycle power conversion.
PFCR/S	Point-focus central receiver with central Stirling-cycle power conversion.
PFDR/CR	Parabolic dish collectors with central Rankine power conversion.
PFDR/B	Parabolic dish collectors with distributed Brayton engines mounted at focal point.
PFDR/R	Parabolic dish collectors with a Rankine-cycle turbine mounted at each focal point.
PFDR/S	Parabolic dish collectors with distributed Stirling engines mounted at the focal points.
SSP	Shallow solar ponds; a saltless solar pond where thermal storage is provided exterior to the pond itself.

Table A-2. COST AND PERFORMANCE SUMMARY FOR 1 MW_e UTILITY SYSTEMS (NO STORAGE)

Generic System	Performance Factors: Annual Efficiencies: Collection SS[a]	Transport SS[a]	Storage SS[a]	Conv SS[a]	System Annual	Engine Eff. @ Design Point	Cost Factors: Coll.[b] Cost ($/m^2)	Receiver Cost ($/m^2)	Eng/Gen Cost ($/kW$_e$)	Transport Cost ($/m^2)	Storage SS[a] ($/kW)	Storage SS[a] ($/kWh)	Bal.[c] of Plant ($/kW$_e$)	Resultant Costs: Capital Cost ($ x 10^6)	Energy Cost (mills/kW$_e$h)	O&M Cost (mills/kW$_e$h)	Actual Capacity Factor
PFCR/R	0.65	0.99	1.0	0.28	0.12	0.32	75	30	510	0.6	0	0	620	2.6	156	12.2	0.33
PFDR/S	0.67	0.96	1.0	0.35	0.20	0.41	100	12	160	4.0	0	0	620	1.8	108	13.7	0.35
PFDR/CR	0.63	0.95	1.0	0.27	0.12	0.30	100	9	510	24.0	0	0	616	2.6	147	14.3	0.36
PFDR/B	0.66	0.96	1.0	0.28	0.17	0.32	100	12	274	4.0	0	0	616	2.0	123	12.0	0.34
PFCR/B	0.50	0.99	1.0	0.32	0.13	0.35	75	26	217	13.0	0	0	620	2.3	147	12.9	0.31
LFDR-TC	0.60	0.98	1.0	0.21	0.09	0.23	85	-	510	4.0	0	0	466	2.5	149	11.9	0.34
LCNT	0.36	0.97	1.0	0.21	0.05	0.23	55	-	510	4.0	0	0	392	2.1	187	16.7	0.23
LFCR	0.29	0.97	1.0	0.27	0.06	0.31	75	34	510	0.5	0	0	542	3.7	250	13.9	0.29
FMDF	0.44	0.98	1.0	0.27	0.08	0.30	100	17	510	1.0	0	0	542	3.0	214	14.3	0.28
LFDR-TR	0.34	0.98	1.0	0.21	0.05	0.23	85	-	510	4.0	0	0	466	3.0	242	16.2	0.24
SSP	0.23	0.98	1.0	0.06	0.01	0.06	22	-	510	1.5	0	0	392	2.6	452	31.0	0.12

[a]SS = Subsystem
[b]Coll. = Collector
[c]Bal. = Balance

Table A-3. COST AND PERFORMANCE SUMMARY FOR 1 MW_e UTILITY SYSTEMS (Nominal CF = 0.4)

Generic System	Performance Factors: Annual Efficiencies: Collection SS[a]	Transport SS[a]	Storage SS[a]	Conv SS[a]	System Annual	Engine Eff. @ Design Point	Cost Factors: Coll.[b] Cost ($/m^2)	Receiver Cost ($/m^2)	Eng/Gen Cost ($/kW$_e$)	Transport Cost ($/m^2)	Storage SS[a] ($/kW)	Storage SS[a] ($/kWh)	Bal.[c] of Plant ($/kW$_e$)	Resultant Costs: Capital Cost ($ x 10^6)	Energy Cost (mills/kW$_e$h)	O&M Cost (mills/kW$_e$h)	Actual Capacity Factor
PFCR/R	0.65	0.99	0.66	0.28	0.17	0.32	75	30	510	0.6	93	15	620	2.8	136	10.3	0.41
PFDR/S	0.67	0.96	0.93	0.35	0.19	0.41	100	12	160	4.0	160	16	620	2.2	111	12.0	0.42
PFDR/CR	0.63	0.95	0.47	0.28	0.13	0.30	100	9	510	24.0	93	15	616	2.7	137	13.4	0.40
PFDR/B	0.66	0.96	0.92	0.28	0.17	0.32	100	12	274	4.0	160	16	616	2.6	125	10.3	0.41
PFCR/B	0.50	0.99	0.94	0.31	0.15	0.35	75	26	217	13.0	160	16	620	3.0	151	10.7	0.39
LFDR-TC	0.60	0.98	0.60	0.21	0.13	0.23	85	-	510	4.0	200	12	466	3.0	143	10.4	0.41
LCNT	0.36	0.97	0.75	0.21	0.07	0.23	55	-	510	4.0	200	12	392	3.1	155	10.5	0.40
LFCR	0.29	0.97	0.91	0.23	0.03	0.31	75	34	510	0.5	93	15	542	4.3	202	10.3	0.41
FMDF	0.44	0.98	0.85	0.27	0.11	0.30	100	17	510	1.0	93	15	542	3.5	169	10.5	0.40
LFDR-TR	0.34	0.98	0.86	0.21	0.07	0.23	85	-	510	4.0	200	12	466	4.0	190	10.5	0.40
SSP	0.23	0.98	0.25	0.06	0.01	0.06	22	-	510	1.5	500	139	392	38.4	1781	10.7	0.39

[a]SS = Subsystem
[b]Coll. = Collector
[c]Bal. = Balance

Table A-4. COST AND PERFORMANCE SUMMARY FOR 1 MW_e UTILITY SYSTEMS (NOMINAL CF = 0.7)

	Performance Factors						Cost Factors							Resultant Costs			
	Annual Efficiencies																
Generic System	Collection SS[a]	Transport SS[a]	Storage SS[a]	Conv SS[a]	System Annual	Engine Eff. @ Design Point	Coll.[b] Cost ($/m²)	Receiver Cost ($/m²)	Eng/Gen Cost ($/kW$_e$)	Transport Cost ($/m²)	Storage SS[a] ($/kW)	Storage SS[a] ($/kWh)	Bal.[c] of Plant ($/kW$_e$)	Capital Cost ($ x 10⁶)	Energy Cost (mills/kW$_e$h)	O&M Cost (mills/kW$_e$h)	Actual Capacity Factor
PFCR/R	0.65	0.99	0.82	0.28	0.17	0.32	75	30	510	0.6	93	15	620	4.0	109	6.8	0.71
PFDR/S	0.67	0.96	0.77	0.35	0.16	0.41	100	12	160	4.0	160	15	620	3.6	104	8.6	0.69
PFDR/CR	0.63	0.95	0.69	0.28	0.14	0.30	100	9	510	24.0	93	15	616	3.9	115	10.0	0.68
PFDR/B	0.66	0.96	0.78	0.28	0.14	0.32	100	12	274	4.0	160	15	616	4.3	118	6.9	0.70
PFCR/B	0.50	0.99	0.80	0.32	0.12	0.35	75	26	217	13.0	160	15	620	4.5	124	6.9	0.70
LFDR-TC	0.60	0.98	0.71	0.21	0.10	0.23	85	-	510	4.0	200	12	466	4.7	131	7.0	0.69
LCNT	0.36	0.97	0.79	0.21	0.06	0.23	55	-	510	4.0	200	12	392	4.9	136	7.0	0.69
LFCR	0.29	0.97	0.90	0.28	0.07	0.31	75	34	510	0.5	93	15	542	6.2	167	6.9	0.71
FMDF	0.44	0.98	0.82	0.27	0.10	0.30	100	17	510	1.0	93	15	542	5.3	147	6.9	0.70
LFDR-TR	0.34	0.98	0.86	0.21	0.06	0.23	85	-	510	4.0	200	12	466	6.3	170	6.9	0.70
SSP	N/A	N/A	N/A	N/A	N/A	N/A	N/A	N/A	N/A	N/A	N/A	N/A	N/A	N/A	N/A	N/A	N/A

[a]SS = Subsystem
[b]Coll. = Collector
[c]Bal. = Balance

Table A-5. COST AND PERFORMANCE SUMMARY FOR 1 MW_e UTILITY SYSTEMS (NOMINAL CF = OPT)

	Performance Factors						Cost Factors							Resultant Costs			
	Annual Efficiencies																
Generic System	Collection SS[a]	Transport SS[a]	Storage SS[a]	Conv SS[a]	System Annual	Engine Eff. @ Design Point	Coll.[b] Cost ($/m²)	Receiver Cost ($/m²)	Eng/Gen Cost ($/kW$_e$)	Transport Cost ($/m²)	Storage SS[a] ($/kW)	Storage SS[a] ($/kWh)	Bal.[c] of Plant ($/kW$_e$)	Capital Cost ($ x 10⁶)	Energy Cost (mills/kW$_e$h)	O&M Cost (mills/kW$_e$h)	Actual Capacity Factor
PFCR/R	0.65	0.99	0.79	0.28	0.16	0.32	75	30	510	0.6	93	15	620	4.3	107	6.4	0.79
PFDR/S	0.67	0.96	0.81	0.35	0.16	0.41	100	12	160	4.0	160	14	620	3.7	101	8.3	0.73
PFDR/CR	0.63	0.95	0.82	0.28	0.15	0.30	100	9	510	24.0	93	15	616	4.3	106	9.6	0.82
PFDR/B	0.66	0.96	0.81	0.28	0.16	0.32	100	12	274	4.0	160	14	616	4.3	117	6.8	0.72
PFCR/B	0.50	0.99	0.77	0.32	0.12	0.35	75	26	217	13.0	160	14	620	4.7	123	6.7	0.73
LFDR-TC	0.60	0.98	0.72	0.21	0.10	0.23	85	-	510	4.0	200	12	466	4.6	131	7.1	0.68
LCNT	0.36	0.97	0.86	0.21	0.07	0.23	55	-	510	4.0	200	12	392	5.5	131	6.3	0.80
LFCR	0.29	0.97	0.88	0.28	0.07	0.31	75	34	510	0.5	93	15	542	6.7	163	6.4	0.78
FMDF	0.44	0.98	0.82	0.27	0.10	0.30	100	17	510	1.0	93	15	542	5.7	147	6.6	0.75
LFDR-TR	0.34	0.98	0.89	0.21	0.07	0.23	85	-	510	4.0	200	12	466	6.7	167	6.6	0.76
SPP	0.23	0.98	1.0	0.06	0.01	0.06	22	-	510	1.5	0	0	392	2.7	452	31.0	0.12

[a]SS = Subsystem
[b]Coll. = Collector
[c]Bal. = Balance

Table A-6. COST AND PERFORMANCE SUMMARY FOR 5 MW_e UTILITY SYSTEMS (NO STORAGE)

	Performance Factors						Cost Factors							Resultant Costs			
	Annual Efficiencies										Storage SS[a]						
Generic System	Collection SS[a]	Transport SS[a]	Storage SS[a]	Conv SS[a]	System Annual	Engine Eff. @ Design Point	Coll.[b] Cost ($/m^2)	Receiver Cost ($/m^2)	Eng/Gen Cost ($/kW$_e$)	Transport Cost ($/m^2)	($/kW)	($/kWh)	Bal.[c] of Plant ($/kW$_e$)	Capital Cost ($ x 10^6)	Energy Cost (mills/kW$_e$h)	O&M Cost (mills/kW$_e$h)	Actual Capacity Factor
PFCR/R	0.56	0.99	1.0	0.31	0.12	0.34	75	16	348	0.84	0	0	411	10.2	132	12.8	0.32
PFDR/S	0.67	0.96	1.0	0.35	0.20	0.41	100	12	160	5.8	0	0	411	7.6	96	13.7	0.35
PFDR/CR	0.63	0.91	1.0	0.30	0.13	0.32	100	9	348	38.0	0	0	411	11.2	131	14.5	0.35
PFDR/B	0.66	0.96	1.0	0.28	0.18	0.32	100	12	274	5.8	0	0	411	8.5	111	12.4	0.33
PFCR/B	0.41	0.98	1.0	0.35	0.12	0.38	75	18	154	6.8	0	0	411	9.0	130	13.8	0.29
LFDR-TC	0.60	0.97	1.0	0.22	0.10	0.25	85	-	348	7.0	0	0	311	10.5	126	12.0	0.34
LCNT	0.36	0.95	1.0	0.23	0.06	0.25	55	-	348	7.0	0	0	261	9.2	159	16.8	0.24
LFCR	0.44	0.96	1.0	0.30	0.09	0.34	75	51	348	1.2	0	0	361	14.0	186	13.4	0.30
FMDF	0.44	0.98	1.0	0.28	0.09	0.32	100	17	348	1.8	0	0	361	11.7	180	15.0	0.26
LFDR-TR	0.35	0.97	1.0	0.22	0.06	0.25	85	-	348	7.0	0	0	311	12.0	202	16.2	0.24
SSP	0.23	0.98	1.0	0.06	0.01	0.06	22	-	314	2.4	0	0	261	11.7	401	31.0	0.12

[a]SS = Subsystem
[b]Coll. = Collector
[c]Bal. = Balance

Table A-7. COST AND PERFORMANCE SUMMARY FOR 5 MW_e UTILITY SYSTEMS (NOMINAL CP = 0.4)

	Performance Factors						Cost Factors							Resultant Costs			
	Annual Efficiencies										Storage SS[a]						
Generic System	Collection SS[a]	Transport SS[a]	Storage SS[a]	Conv SS[a]	System Annual	Engine Eff. @ Design Point	Coll.[b] Cost ($/m^2)	Receiver Cost ($/m^2)	Eng/Gen Cost ($/kW$_e$)	Transport Cost ($/m^2)	($/kW)	($/kWh)	Bal.[c] of Plant ($/kW$_e$)	Capital Cost ($ x 10^6)	Energy Cost (mills/kW$_e$h)	O&M Cost (mills/kW$_e$h)	Actual Capacity Factor
PFCR/R	0.56	0.99	0.86	0.31	0.16	0.34	75	16	348	0.8	93	15	411	11.5	115	10.4	0.40
PFDR/S	0.67	0.96	0.93	0.35	0.19	0.41	100	12	160	5.8	160	16	411	10.0	101	12.0	0.42
PFDR/CR	0.63	0.91	0.41	0.30	0.15	0.32	100	9	348	38.0	93	15	411	12.1	123	13.3	0.41
PFDR/B	0.66	0.96	0.94	0.28	0.17	0.32	100	12	274	5.8	160	16	411	11.3	115	10.5	0.40
PFCR/B	0.41	0.98	0.91	0.34	0.1[illegible]	0.38	75	18	154	6.8	160	16	411	12.7	126	10.5	0.40
LFDR-TC	0.60	0.97	0.62	0.22	0.13	0.25	85	-	348	7.0	200	12	311	12.6	126	10.5	0.40
LCNT	0.36	0.95	0.80	0.23	0.07	0.25	55	-	348	7.0	200	12	261	13.3	135	10.6	0.39
LFCR	0.44	0.96	0.84	0.30	0.12	0.34	75	51	348	1.2	93	15	361	15.7	153	10.4	0.40
FMDF	0.44	0.98	0.66	0.28	0.11	0.32	100	17	348	1.8	93	15	361	14.7	146	10.6	0.40
LFDR-TR	0.35	0.97	0.89	0.23	0.07	0.25	85	-	348	7.0	200	12	311	16.9	164	10.4	0.40
SSP	0.23	0.98	0.13	0.06	0.01	0.06	22	-	314	2.4	500	139	261	19.0	1766	10.9	0.39

[a]SS = Subsystem
[b]Coll. = Collector
[c]Bal. = Balance

Table A-8. COST AND PERFORMANCE SUMMARY FOR 5 MW_e UTILITY SYSTEMS (NOMINAL CF = 0.7)

Generic System	Performance Factors: Annual Efficiencies: Collection SS[a]	Transport SS[a]	Storage SS[a]	Conv SS[a]	System Annual	Engine Eff. @ Design Point	Cost Factors: Coll.[b] Cost ($/m²)	Receiver Cost ($/m²)	Eng/Gen Cost ($/kW$_e$)	Transport Cost ($/m²)	Storage SS[a] ($/kW)	Storage SS[a] ($/kWh)	Bal.[c] of Plant ($/kW$_e$)	Resultant Costs: Capital Cost ($ x 10⁶)	Energy Cost (mills/kW$_e$h)	O&M Cost (mills/kW$_e$h)	Actual Capacity Factor
PFCR/R	0.56	0.99	0.86	0.31	0.16	0.34	75	16	348	0.8	93	15	411	17.9	90	6.8	0.72
PFDR/S	0.67	0.96	0.77	0.35	0.16	0.41	100	12	160	5.8	160	16	411	16.7	98	8.6	0.69
PFDR/CR	0.63	0.91	0.90	0.30	0.16	0.32	100	9	348	38.0	93	15	411	17.6	103	9.9	0.70
PFDR/B	0.66	0.96	0.78	0.28	0.14	0.32	100	12	274	5.8	160	16	411	20.1	112	6.9	0.70
PFCR/B	0.41	0.98	0.75	0.35	0.10	0.38	75	18	154	6.8	160	16	411	21.4	117	6.8	0.71
LFDR-TC	0.60	0.97	0.78	0.22	0.11	0.25	85	-	348	7.0	200	12	311	21.3	117	6.9	0.71
LCNT	0.36	0.95	0.91	0.23	0.07	0.25	55	-	348	7.0	200	12	261	22.0	119	6.8	0.71
LFCR	0.44	0.96	0.93	0.30	0.12	0.34	75	51	348	1.2	93	15	361	22.7	125	6.0	0.70
FMDF	0.44	0.98	0.90	0.28	0.12	0.32	100	17	348	1.8	93	15	361	23.8	130	6.9	0.70
LFDR-TR	0.35	0.97	0.88	0.23	0.07	0.25	85	-	348	7.0	200	12	311	27.3	150	6.0	0.70
SSP	N/A	N/A	N/A	N/A	N/A	N/A	N/A	N/A	N/A	N/A	N/A	N/A	N/A	N/A	N/A	N/A	N/A

[a]SS = Subsystem
[b]Coll. = Collector
[c]Bal. = Balance

Table A-9. COST AND PERFORMANCE SUMMARY FOR 5 MW_e UTILITY SYSTEMS (NOMINAL CF = OPT)

Generic System	Performance Factors: Annual Efficiencies: Collection SS[a]	Transport SS[a]	Storage SS[a]	Conv SS[a]	System Annual	Engine Eff. @ Design Point	Cost Factors: Coll.[b] Cost ($/m²)	Receiver Cost ($/m²)	Eng/Gen Cost ($/kW$_e$)	Transport Cost ($/m²)	Storage SS[a] ($/kW)	Storage SS[a] ($/kWh)	Bal.[c] of Plant ($/kW$_e$)	Resultant Costs: Capital Cost ($ x 10⁶)	Energy Cost (mills/kW$_e$h)	O&M Cost (mills/kW$_e$h)	Actual Capacity Factor
PFCR/R	0.56	0.99	0.77	0.31	0.15	0.34	75	16	348	0.8	93	15	411	18.8	98	6.5	0.76
PFDR/S	0.67	0.96	0.81	0.35	0.16	0.41	100	12	160	5.8	160	16	411	17.2	95	8.3	0.73
PFDR/CR	0.63	0.91	0.74	0.30	0.15	0.32	100	9	348	38.0	93	15	411	20.0	101	9.2	0.80
PFDR/B	0.66	0.96	0.98	0.28	0.18	0.32	100	12	274	5.8	160	16	411	8.7	111	12.4	0.33
PFCR/B	0.41	0.98	0.77	0.35	0.10	0.38	75	18	154	6.8	160	16	411	20.5	116	7.0	0.69
LFDR-TC	0.60	0.97	0.78	0.22	0.12	0.25	85	-	348	7.0	200	12	311	20.4	116	7.0	0.69
LCNT	0.36	0.95	0.89	0.23	0.07	0.25	55	-	348	7.0	200	12	261	24.0	117	6.4	0.79
LFCR	0.44	0.96	0.89	0.30	0.12	0.34	75	51	348	1.2	93	15	361	24.8	121	6.4	0.79
FMDF	0.44	0.98	0.77	0.28	0.11	0.32	100	17	348	1.8	93	15	361	26.1	130	6.5	0.77
LFDR-TR	0.35	0.97	0.87	0.23	0.07	0.25	85	-	348	7.0	200	12	311	30.2	149	6.4	0.77
SSP	0.23	0.98	1.0	0.06	0.01	0.06	22	-	314	2.4	0	0	261	11.7	401	31.0	0.12

[a]SS = Subsystem
[b]Coll. = Collector
[c]Bal. = Balance

Table A-10. COST AND PERFORMANCE SUMMARY FOR 10 MW_e UTILITY SYSTEMS (NO STORAGE)

	Performance Factors						Cost Factors							Resultant Costs			
	Annual Efficiencies										Storage SS[a]						
Generic System	Collection SS[a]	Transport SS[a]	Storage SS[a]	Conv SS[a]	System Annual	Engine Eff. @ Design Point	Coll.[b] Cost ($/m^2)	Receiver Cost ($/m^2)	Eng/Gen Cost ($/kW$_e$)	Transport Cost ($/m^2)	($/kW)	($/kWh)	Bal.[c] of Plant ($/kW$_e$)	Capital Cost ($ x 10^6)	Energy Cost (mills/kW$_e$h)	O&M Cost (mills/kW$_e$h)	Actual Capacity Factor
PFCR/R	0.56	0.99	1.0	0.30	0.12	0.34	75	14	293	1.1	0	0	346	17.3	119	13.3	0.30
PFDR/S	0.67	0.96	1.0	0.35	0.20	0.41	100	12	160	7.0	0	0	346	14.6	93	13.7	0.35
PFDR/CR	0.63	0.89	1.0	0.30	0.13	0.32	100	9	293	46.0	0	0	346	21.7	129	14.6	0.35
PFDR/B	0.66	0.95	1.0	0.28	0.13	0.32	100	12	274	7.0	0	0	346	17.0	108	12.1	0.34
PFCR/B	0.41	0.98	1.0	0.34	0.12	0.38	75	14	130	1.0	0	0	346	15.4	114	13.8	0.29
LFDR-TC	0.60	0.97	1.0	0.22	0.10	0.25	85	-	293	8.2	0	0	262	19.9	120	12.0	0.34
LCNT	0.36	0.93	1.0	0.23	0.05	0.25	55	-	293	8.2	0	0	219	16.7	153	16.9	0.23
LFCR	0.45	0.96	1.0	0.30	0.09	0.34	75	51	293	1.5	0	0	304	26.6	175	13.2	0.30
FMDF	0.44	0.97	1.0	0.30	0.09	0.32	100	17	328	2.2	0	0	304	22.1	168	14.7	0.27
LFDR-TR	0.35	0.97	1.0	0.22	0.06	0.25	85	-	293	8.2	0	0	262	23.0	193	16.2	0.24
SSP	0.23	0.98	1.0	0.06	0.01	0.06	22	-	269	2.9	0	0	219	22.8	392	31.0	0.12

[a]SS = Subsystem
[b]Coll. = Collector
[c]Bal. = Balance

Table A-11. COST AND PERFORMANCE SUMMARY FOR 10 MW_e UTILITY SYSTEMS (NOMINAL CF = 0.4)

	Performance Factors						Cost Factors							Resultant Costs			
	Annual Efficiencies										Storage SS[a]						
Generic System	Collection SS[a]	Transport SS[a]	Storage SS[a]	Conv SS[a]	System Annual	Engine Eff. @ Design Point	Coll.[b] Cost ($/m^2)	Receiver Cost ($/m^2)	Eng/Gen Cost ($/kW$_e$)	Transport Cost ($/m^2)	($/kW)	($/kWh)	Bal.[c] of Plant ($/kW$_e$)	Capital Cost ($ x 10^6)	Energy Cost (mills/kW$_e$h)	O&M Cost (mills/kW$_e$h)	Actual Capacity Factor
PFCR/R	0.56	0.99	0.56	0.31	0.15	0.34	75	14	293	1.1	93	15	346	20.9	106	10.4	0.40
PFDR/S	0.67	0.96	0.93	0.35	0.19	0.41	100	12	160	7.0	160	16	346	19.5	99	12.0	0.42
PFDR/CR	0.63	0.89	0.45	0.30	0.15	0.32	100	9	293	46.0	93	15	346	23.7	121	13.3	0.41
PFDR/B	0.66	0.95	0.93	0.28	0.17	0.32	100	12	274	7.0	160	16	346	22.7	113	10.3	0.41
PFCR/B	0.41	0.98	0.91	0.34	0.11	0.38	75	14	130	1.0	160	16	346	23.0	116	10.5	0.40
LFDR-TC	0.60	0.97	0.62	0.22	0.12	0.25	85	-	293	8.2	200	12	262	24.1	121	10.5	0.40
LCNT	0.36	0.93	0.70	0.23	0.07	0.25	55	-	293	8.2	200	12	219	27.1	133	10.4	0.41
LFCR	0.45	0.96	0.79	0.30	0.12	0.34	75	51	293	1.5	93	15	304	30.0	144	10.3	0.41
FMDF	0.44	0.97	0.46	0.30	0.11	0.32	100	17	328	2.2	93	15	304	27.2	143	11.0	0.38
LFDR-TR	0.35	0.97	0.89	0.23	0.07	0.25	85	-	293	8.2	200	12	262	32.8	159	10.4	0.41
SSP	0.23	0.98	0.25	0.06	0.01	0.06	22	-	269	2.9	500	139	219	38.0	1763	10.7	0.39

[a]SS = Subsystem
[b]Coll. = Collector
[c]Bal. = Balance

Table A-12. COST AND PERFORMANCE SUMMARY FOR 10 MW_e UTILITY SYSTEMS (NOMINAL CF = 0.7)

	Performance Factors						Cost Factors							Resultant Costs			
	Annual Efficiencies										Storage SS[a]						
Generic System	Collection SS[a]	Transport SS[a]	Storage SS[a]	Conv SS[a]	System Annual	Engine Eff. @ Design Point	Coll.[b] Cost ($/m^2)	Receiver Cost ($/m^2)	Eng/Gen Cost ($/kW$_e$)	Transport Cost ($/m^2)	($/kW)	($/kWh)	Bal.[c] of Plant ($/kW$_e$)	Capital Cost ($ x 10^6)	Energy Cost (mills/kW$_e$h)	O&M Cost (mills/kW$_e$h)	Actual Capacity Factor
PFCR/R	0.56	0.99	0.73	0.31	0.14	0.34	75	14	293	1.1	93	15	346	33.2	94	6.9	0.70
PFDR/S	0.67	0.96	0.77	0.35	0.16	0.41	00	12	160	7.0	160	16	346	32.8	96	8.6	0.69
PFDR/CR	0.63	0.89	0.67	0.30	0.14	0.32	00	9	293	46.0	93	15	346	34.9	104	9.9	0.68
PFDR/B	0.66	0.95	0.79	0.28	0.15	0.32	00	12	274	7.0	160	16	346	39.6	111	6.9	0.70
PFCR/B	0.41	0.98	0.76	0.35	0.10	0.38	75	14	130	1.0	160	16	346	39.2	109	6.9	0.71
LFDR-TC	0.60	0.97	0.69	0.22	0.11	0.25	85	-	293	8.2	200	12	262	40.9	114	6.9	0.70
LCNT	0.36	0.93	0.91	0.23	0.08	0.25	55	-	293	8.2	200	12	219	43.0	119	6.9	0.70
LFCR	0.45	0.96	0.77	0.30	0.11	0.34	75	51	293	1.5	93	15	304	44.4	122	7.0	0.69
FMDF	0.44	0.97	0.82	0.30	0.12	0.32	100	17	328	2.2	93	15	304	44.2	123	6.9	0.70
LFDR-TR	0.35	0.97	0.87	0.23	0.07	0.25	85	-	293	8.2	200	12	262	55.7	147	6.0	0.70
SSP	N/A	N/A	N/A	N/A	N/A	N/A	N/A	N/A	N/A	N/A	N/A	N/A	N/A	N/A	N/A	N/A	N/A

[a]SS = Subsystem
[b]Coll. = Collector
[c]Bal. = Balance

Table A-13. COST AND PERFORMANCE SUMMARY FOR 10 MW_e UTILITY SYSTEMS (NOMINAL CF = OPT)

	Performance Factors						Cost Factors							Resultant Costs			
	Annual Efficiencies										Storage SS[a]						
Generic System	Collection SS[a]	Transport SS[a]	Storage SS[a]	Conv SS[a]	System Annual	Engine Eff. @ Design Point	Coll.[b] Cost ($/m^2)	Receiver Cost ($/m^2)	Eng/Gen Cost ($/kW$_e$)	Transport Cost ($/m^2)	($/kW)	($/kWh)	Bal.[c] of Plant ($/kW$_e$)	Capital Cost ($ x 10^6)	Energy Cost (mills/kW$_e$h)	O&M Cost (mills/kW$_e$h)	Actual Capacity Factor
PFCR/R	0.56	0.99	0.81	0.31	0.15	0.34	75	14	293	1.1	93	15	346	34.7	93	6.7	0.74
PFDR/S	0.67	0.96	1.0	0.35	0.20	0.41	100	12	160	7.0	0	0	346	14.6	93	13.7	0.35
PFDR/CR	0.63	0.89	0.75	0.30	0.15	0.32	100	9	293	46.0	93	15	346	39.5	101	9.3	0.80
PFDR/B	0.66	0.95	0.96	0.28	0.18	0.32	100	12	274	7.0	160	16	346	17.5	108	12.1	0.34
PFCR/B	0.41	0.98	0.79	0.35	0.11	0.38	75	14	130	1.0	160	16	346	36.4	108	7.2	0.67
LFDR-TC	0.60	0.97	0.75	0.22	0.12	0.25	35	-	293	8.2	200	12	262	38.9	113	7.1	0.67
LCNT	0.36	0.93	0.90	0.23	0.08	0.25	55	-	293	8.2	200	12	219	47.2	117	6.4	0.78
LFCR	0.45	0.96	0.85	0.30	0.12	0.34	75	51	293	1.5	93	15	304	48.3	116	6.3	0.80
FMDF	0.44	0.97	0.81	0.30	0.12	0.32	100	17	328	2.2	93	15	304	48.1	123	6.5	0.76
LFDR-TR	0.35	0.97	0.89	0.23	0.07	0.25	35	-	293	8.2	200	12	262	59.3	146	6.5	0.76
SSP	0.23	0.98	1.0	0.06	0.01	0.06	22	-	269	2.9	0	0	219	22.8	392	31.0	0.12

[a]SS = Subsystem
[b]Coll. = Collector
[c]Bal. = Balance

Table A-14. COST AND PERFORMANCE SUMMARY FOR 0.1 MW_e INDUSTRIAL SYSTEMS (NOMINAL CF = 0.3)

	Performance Factors						Cost Factors							Resultant Costs			
	Annual Efficiencies										Storage SS[a]						
Generic System	Collection SS[a]	Transport SS[a]	Storage SS[a]	Conv SS[a]	System Annual	Engine Eff. @ Design Point	Coll.[b] Cost ($/m^2)	Receiver Cost ($/m^2)	Eng/Gen Cost ($/kW$_e$)	Transport Cost ($/m^2)	($/kW)	($/kWh)	Bal.[c] of Plant ($/kW$_e$)	Capital Cost ($ x 10^6)	Energy Cost (mills/kW$_e$h)	O&M Cost (mills/kW$_e$h)	Actual Capacity Factor
PFDR/S	0.67	0.99	0.87	0.36	0.20	0.42	105	12	134	2.3	160	16	383	0.15	94	14.1	0.34
PFDR/B	0.66	0.99	1.0	0.28	0.18	0.32	105	12	239	2.3	160	16	396	0.15	107	13.3	0.30
PFCR/S	0.48	1.0	0.97	0.35	0.11	0.40	75	18	123	0.1	160	16	505	0.20	132	13.2	0.30
PFCR/B	0.47	1.0	0.98	0.23	0.08	0.30	75	14	163	0.1	160	16	527	0.24	154	13.1	0.31
PFCR/R	0.54	1.0	0.94	0.25	0.13	0.29	75	24	413	0.1	93	15	530	0.25	153	12.5	0.32
PFDR/R	0.77	0.99	0.86	0.25	0.14	0.29	97	9	550	2.3	160	16	389	0.21	135	12.7	0.32
PFDR/CR	0.76	0.95	1.0	0.24	0.15	0.29	97	9	413	17.0	0	0	522	0.23	136	12.3	0.33
LFDR-TC	0.60	0.99	1.0	0.18	0.09	0.21	85	-	483	3.4	0	0	553	0.26	157	12.5	0.32
FMDF	0.48	0.98	1.0	0.25	0.07	0.29	100	17	413	0.4	0	0	530	0.32	202	13.0	0.30
LCNT	0.37	0.99	0.8	0.18	0.06	0.21	55	-	483	1.9	200	12	553	0.29	180	12.9	0.31

[a]SS = Subsystem
[b]Coll. = Collector
[c]Bal. = Balance

Table A-15. COST AND PERFORMANCE SUMMARY FOR 0.1 MW_e INDUSTRIAL SYSTEMS (NOMINAL CF = 0.4)

	Performance Factors						Cost Factors							Resultant Costs			
	Annual Efficiencies										Storage SS[a]						
Generic System	Collection SS[a]	Transport SS[a]	Storage SS[a]	Conv SS[a]	System Annual	Engine Eff. @ Design Point	Coll.[b] Cost ($/m^2)	Receiver Cost ($/m^2)	Eng/Gen Cost ($/kW$_e$)	Transport Cost ($/m^2)	($/kW)	($/kWh)	Bal.[c] of Plant ($/kW$_e$)	Capital Cost ($ x 10^6)	Energy Cost (mills/kW$_e$h)	O&M Cost (mills/kW$_e$h)	Actual Capacity Factor
PFDR/S	0.67	0.99	0.89	0.36	0.21	0.42	105	12	134	2.3	160	16	383	0.21	93	11.1	0.47
PFDR/B	0.66	0.99	0.91	0.29	0.17	0.32	105	12	239	2.3	160	16	396	0.26	109	9.3	0.47
PFCR/S	0.48	1.0	0.88	0.35	0.13	0.40	75	18	123	0.1	160	16	505	0.27	133	10.5	0.40
PFCR/B	0.47	1.0	0.90	0.24	0.10	0.30	75	14	163	0.1	160	16	527	0.31	145	10.1	0.42
PFCR/R	0.54	1.0	0.95	0.25	0.13	0.29	75	24	413	0.1	93	15	530	0.31	140	10.4	0.41
PFDR/R	0.77	0.99	0.90	0.25	0.15	0.29	97	9	550	2.3	160	16	389	0.28	133	10.1	0.42
PFDR/CR	0.76	0.95	0.62	0.25	0.17	0.29	97	9	413	17.0	93	15	522	0.28	124	9.6	0.45
LFDR-TC	0.60	0.99	0.53	0.18	0.10	0.21	85	-	483	3.4	200	12	553	0.33	152	10.2	0.42
FMDF	0.48	0.98	0.39	0.25	0.09	0.29	100	17	413	0.4	93	15	530	0.35	168	10.4	0.40
LCNT	0.37	0.99	0.73	0.18	0.06	0.21	55	-	483	1.9	200	12	553	0.35	166	10.5	0.40

[a]SS = Subsystem
[b]Coll. = Collector
[c]Bal. = Balance

Table A-16. COST AND PERFORMANCE SUMMARY FOR 0.1 MW_e INDUSTRIAL SYSTEMS (NOMINAL CF = 0.5)

	Performance Factors						Cost Factors							Resultant Costs			
	Annual Efficiencies																
Generic System	Collection SS[a]	Transport SS[a]	Storage SS[a]	Conv SS[a]	System Annual	Engine Eff. @ Design Point	Coll.[b] Cost ($/m²)	Receiver Cost ($/m²)	Eng/Gen Cost ($/kW$_e$)	Transport Cost ($/m²)	Storage SS[a] ($/kW)	Storage SS[a] ($/kWh)	Bal.[c] of Plant ($/kW$_e$)	Capital Cost ($ x 10^6)	Energy Cost (mills/kW$_e$h)	O&M Cost (mills/kW$_e$h)	Actual Capacity Factor
PFDR/S	0.67	0.99	0.81	0.37	0.19	0.42	05	12	134	2.3	160	16	383	0.25	94	10.1	0.53
PFDR/B	0.66	0.99	0.84	0.29	0.16	0.32	05	12	239	2.3	160	16	396	0.30	110	8.5	0.53
PFCR/S	0.48	1.0	0.83	0.36	0.12	0.40	75	18	123	0.1	160	16	505	0.33	124	8.6	0.52
PFCR/B	0.46	1.0	0.82	0.24	0.09	0.30	75	14	163	0.1	160	16	527	0.38	145	8.8	0.50
PFCR/R	0.54	1.0	0.93	0.25	0.13	0.29	75	24	413	0.1	93	15	530	0.35	127	8.4	0.54
PFDR/R	0.77	0.99	0.76	0.25	0.13	0.29	97	9	450	2.3	160	16	389	0.37	144	8.9	0.50
PFDR/CR	0.76	0.95	0.68	0.25	0.16	0.29	97	9	413	17.0	93	15	522	0.33	121	8.5	0.53
LFDR-TC	0.60	0.99	0.84	0.18	0.10	0.21	85	-	483	3.4	200	12	553	0.39	146	8.7	0.51
FMDF	0.48	0.98	0.85	0.25	0.11	0.29	100	17	413	0.4	93	15	530	0.39	150	8.9	0.50
LCNT	0.37	0.99	0.73	0.18	0.06	0.21	55	-	483	1.9	200	12	553	0.41	155	8.7	0.51

[a]SS = Subsystem
[b]Coll. = Collector
[c]Bal. = Balance

Table A-17. COST AND PERFORMANCE SUMMARY FOR 0.1 MW_e INDUSTRIAL SYSTEMS (NOMINAL CF = 0.6)

	Performance Factors						Cost Factors							Resultant Costs			
	Annual Efficiencies																
Generic System	Collection SS[a]	Transport SS[a]	Storage SS[a]	Conv SS[a]	System Annual	Engine Eff. @ Design Point	Coll.[b] Cost ($/m²)	Receiver Cost ($/m²)	Eng/Gen Cost ($/kW$_e$)	Transport Cost ($/m²)	Storage SS[a] ($/kW)	Storage SS[a] ($/kWh)	Bal.[c] of Plant ($/kW$_e$)	Capital Cost ($ x 10^6)	Energy Cost (mills/kW$_e$h)	O&M Cost (mills/kW$_e$h)	Actual Capacity Factor
PFDR/S	0.67	0.99	0.73	0.37	0.17	0.42	105	12	134	2.3	160	16	383	0.28	98	9.6	0.58
PFDR/B	0.66	0.99	0.85	0.29	0.16	0.32	105	12	239	2.3	160	16	396	0.35	110	7.5	0.62
PFCR/S	0.48	1.0	0.82	0.36	0.10	0.40	75	18	123	0.1	160	16	505	0.40	128	7.7	0.60
PFCR/B	0.47	1.0	0.82	0.24	0.09	0.30	75	14	163	0.1	160	16	527	0.46	143	7.6	0.62
PFCR/R	0.54	1.0	0.83	0.25	0.13	0.29	75	24	413	0.1	93	15	530	0.39	123	7.4	0.61
PFDR/R	0.77	0.99	0.82	0.26	0.14	0.29	97	9	550	2.3	160	16	389	0.43	135	7.6	0.61
PFDR/CR	0.76	0.95	0.70	0.25	0.16	0.29	97	9	413	17.0	93	15	522	0.37	119	7.7	0.60
LFDR-TC	0.60	0.99	0.76	0.19	0.10	0.21	85	-	483	3.4	200	12	553	0.45	142	7.7	0.60
FMDF	0.48	0.98	0.34	0.25	0.07	0.29	100	17	413	0.4	93	15	530	0.59	182	7.6	0.61
LCNT	0.37	0.99	0.86	0.19	0.06	0.21	55	-	483	1.9	200	12	553	0.48	149	7.6	0.61

[a]SS = Subsystem
[b]Coll. = Collector
[c]Bal. = Balance

Table A-18. COST AND PERFORMANCE SUMMARY FOR 0.1 MW_e INDUSTRIAL SYSTEMS (NOMINAL CF = 0.7)

	Performance Factors						Cost Factors							Resultant Costs			
	Annual Efficiencies										Storage SS[a]						
Generic System	Collection SS[a]	Transport SS[a]	Storage SS[a]	Conv SS[a]	System Annual	Engine Eff. @ Design Point	Coll.[b] Cost ($/m^2)	Receiver Cost ($/m^2)	Eng/Gen Cost ($/kW$_e$)	Transport Cost ($/m^2)	($/kW)	($/kWh)	Bal. of Plant ($/kW$_e$)	Capital Cost ($ x 10^6)	Energy Cost (mills/kW$_e$h)	O&M Cost (mills/kW$_e$h)	Actual Capacity Factor
PFDR/S	0.67	0.99	0.79	0.37	0.19	0.42	105	12	134	2.3	160	16	383	0.34	92	8.3	0.73
PFDR/B	0.66	0.99	0.79	0.29	0.15	0.32	105	12	239	2.3	160	16	396	0.43	110	6.6	0.75
PFCR/S	0.49	1.0	0.76	0.36	0.12	0.40	75	18	123	0.1	160	16	505	0.45	120	6.8	0.71
PFCR/B	0.47	1.0	0.80	0.24	0.09	0.30	75	14	163	0.1	160	16	527	0.53	142	6.8	0.71
PFCR/R	0.54	1.0	0.91	0.25	0.13	0.29	75	24	413	0.1	93	15	530	0.45	121	6.8	0.71
PFDR/R	0.77	0.99	0.77	0.26	0.13	0.29	97	9	450	2.3	160	16	389	0.52	137	6.7	0.72
PFDR/CR	0.76	0.95	0.84	0.25	0.17	0.29	97	9	413	17.0	93	15	522	0.43	114	6.7	0.73
LFDR-TC	0.60	0.99	0.78	0.19	0.10	0.21	85	-	483	3.4	200	12	553	0.53	141	6.8	0.71
FMDF	0.45	0.98	0.54	0.25	0.08	0.29	100	17	413	0.5	93	15	530	0.62	158	6.6	0.74
LCNT	0.37	0.99	0.91	0.19	0.06	0.21	55	-	483	1.9	200	12	553	0.54	146	6.9	0.70

[a]SS = Subsystem
[b]Coll. = Collector
[c]Bal. = Balance

Table A-19. COST AND PERFORMANCE SUMMARY FOR 0.1 MW_e INDUSTRIAL SYSTEMS (NOMINAL CF = 0.8)

	Performance Factors						Cost Factors							Resultant Costs			
	Annual Efficiencies										Storage SS[a]						
Generic System	Collection SS[a]	Transport SS[a]	Storage SS[a]	Conv SS[a]	System Annual	Engine Eff. @ Design Point	Coll.[b] Cost ($/m^2)	Receiver Cost ($/m^2)	Eng/Gen Cost ($/kW$_e$)	Transport Cost ($/m^2)	($/kW)	($/kWh)	Bal.[c] of Plant ($/kW$_e$)	Capital Cost ($ x 10^6)	Energy Cost (mills/kW$_e$h)	O&M Cost (mills/kW$_e$h)	Actual Capacity Factor
PFDR/S	0.67	0.99	0.76	0.37	0.18	0.42	105	12	134	2.3	160	16	383	0.42	103	7.8	0.80
PFDR/B	0.66	0.99	0.76	0.29	0.14	0.32	105	12	239	2.3	160	16	396	0.49	117	6.3	0.80
PFCR/S	0.48	1.0	0.71	0.37	0.10	0.40	75	18	123	0.1	160	16	505	0.56	132	6.3	0.81
PFCR/B	0.47	1.0	0.73	0.24	0.08	0.30	75	14	163	0.1	160	16	527	0.64	149	6.3	0.81
PFCR/R	0.54	1.0	0.81	0.25	0.12	0.29	75	24	413	0.1	93	15	530	0.51	120	6.3	0.81
PFDR/R	0.77	0.99	0.71	0.26	0.12	0.29	97	9	450	2.3	160	16	389	0.64	149	6.3	0.81
PFDR/CR	0.76	0.95	0.83	0.25	0.17	0.29	97	9	413	17.0	93	15	522	0.50	117	6.3	0.81
LFDR-TC	0.60	0.99	0.64	0.19	0.09	0.21	85	-	483	3.4	200	12	553	0.62	146	6.3	0.79
FMDF	0.48	0.98	0.67	0.25	0.09	0.29	100	17	413	0.4	93	15	530	0.66	148	6.1	0.84
LCNT	0.37	0.99	0.61	0.19	0.05	0.21	55	-	483	1.9	200	12	553	0.67	156	6.3	0.80

[a]SS = Subsystem
[b]Coll. = Collector
[c]Bal. = Balance

Table A-20. COST AND PERFORMANCE SUMMARY FOR 0.3 MW_e INDUSTRIAL SYSTEMS (NOMINAL CF = 0.3)

	Performance Factors						Cost Factors							Resultant Costs			
	Annual Efficiencies																
Generic System	Collection SS[a]	Transport SS[a]	Storage SS[a]	Conv SS[a]	System Annual	Engine Eff. @ Design Point	Coll.[b] Cost ($/m²)	Receiver Cost ($/m²)	Eng/Gen Cost ($/kW$_e$)	Transport Cost ($/m²)	Storage SS[a] ($/kW)	Storage SS[a] ($/kWh)	Bal.[c] of Plant ($/kW$_e$)	Capital Cost ($ x 10⁶)	Energy Cost (mills/kW$_e$h)	O&M Cost (mills/kW$_e$h)	Actual Capacity Factor
PFDR/S	0.67	0.99	0.94	0.36	0.22	0.42	105	12	134	2.8	160	16	268	0.33	84	14.6	0.32
PFDR/B	0.66	0.99	0.97	0.28	0.18	0.32	105	12	239	2.8	160	16	279	0.46	98	12.3	0.33
PFCR/S	0.52	1.0	0.97	0.34	0.12	0.40	75	22	142	0.2	160	16	325	0.50	112	13.0	0.31
PFCR/B	0.51	1.0	0.98	0.25	0.10	0.32	75	20	182	0.2	160	16	337	0.58	125	13.0	0.31
PFCR/R	0.57	1.0	1.0	0.25	0.10	0.29	75	22	462	0.2	0	0	343	0.67	145	13.1	0.31
PFDR/R	0.77	0.99	0.86	0.25	0.14	0.29	97	9	450	2.8	160	16	272	0.60	127	12.7	0.32
PFDR/CR	0.76	0.94	1.0	0.25	0.15	0.29	97	9	462	19.0	0	0	343	0.63	129	12.3	0.33
LFDR-TC	0.60	0.98	1.0	0.19	0.16	0.22	85	-	532	3.8	0	0	361	0.72	145	12.3	0.33
FMDF	0.48	0.98	0.82	0.25	0.12	0.29	100	17	462	0.5	93	15	343	0.81	157	12.0	0.34
LCNT	0.37	0.98	0.82	0.19	0.07	0.22	55	-	532	2.1	200	12	361	0.78	167	13.0	0.31

[a]SS = Subsystem
[b]Coll. = Collector
[c]Bal. = Balance

Table A-21. COST AND PERFORMANCE SUMMARY FOR 0.3 MW_e INDUSTRIAL SYSTEMS (NOMINAL CF = 0.4)

	Performance Factors						Cost Factors							Resultant Costs			
	Annual Efficiencies																
Generic System	Collection SS[a]	Transport SS[a]	Storage SS[a]	Conv SS[a]	System Annual	Engine Eff. @ Design Point	Coll.[b] Cost ($/m²)	Receiver Cost ($/m²)	Eng/Gen Cost ($/kW$_e$)	Transport Cost ($/m²)	Storage SS[a] ($/kW)	Storage SS[a] ($/kWh)	Bal.[c] of Plant ($/kW$_e$)	Capital Cost ($ x 10⁶)	Energy Cost (mills/kW$_e$h)	O&M Cost (mills/kW$_e$h)	Actual Capacity Factor
PFDR/S	0.67	0.99	0.94	0.36	0.22	0.42	105	12	134	2.8	160	16	268	0.51	90	12.3	0.40
PFDR/B	0.44	0.99	0.92	0.29	0.17	0.32	105	12	239	2.8	160	16	279	0.69	104	9.7	0.44
PFCR/S	0.52	1.0	0.86	0.36	0.14	0.40	75	22	142	0.2	160	16	325	0.71	112	10.1	0.42
PFCR/B	0.51	1.0	0.90	0.26	0.12	0.32	75	20	182	0.2	160	16	337	0.79	124	10.1	0.42
PFCR/R	0.57	1.0	0.43	0.25	0.12	0.29	75	22	462	0.2	93	15	343	0.81	129	10.2	0.41
PFDR/R	0.77	0.99	0.92	0.25	0.15	0.29	97	9	450	2.8	160	16	272	0.77	128	10.6	0.40
PFDR/CR	0.76	0.94	0.76	0.25	0.18	0.29	97	9	462	19.0	93	15	343	0.77	118	9.8	0.44
LFDR-TC	0.60	0.98	0.53	0.20	0.10	0.22	85	-	532	3.8	200	12	361	0.90	141	10.2	0.42
FMDF	0.48	0.98	0.22	0.25	0.07	0.29	100	17	462	0.5	93	15	343	1.22	180	9.9	0.43
LCNT	0.37	0.98	0.79	0.20	0.07	0.22	55	-	532	2.1	200	12	361	0.94	154	10.6	0.40

[a]SS = Subsystem
[b]Coll. = Collector
[c]Bal. = Balance

Table A-22. COST AND PERFORMANCE SUMMARY FOR 0.3 MW_e INDUSTRIAL SYSTEMS (NOMINAL CF = 0.5)

	Performance Factors						Cost Factors							Resultant Costs			
	Annual Efficiencies										Storage SS[a]						
Generic System	Collection SS[a]	Transport SS[a]	Storage SS[a]	Conv SS[a]	System Annual	Engine Eff.@ Design Point	Coll.[b] Cost ($/m^2)	Receiver Cost ($/m^2)	Eng/Gen Cost ($/kW$_e$)	Transport Cost ($/m^2)	($/kW)	($/kWh)	Bal.[c] of Plant ($/kW$_e$)	Capital Cost ($ x 10^6)	Energy Cost (mills/kW$_e$h)	O&M Cost (mills/kW$_e$h)	Actual Capacity Factor
PFDR/S	0.67	0.99	0.88	0.36	0.21	0.42	105	12	134	2.8	160	16	268	0.66	91	10.5	0.50
PFDR/B	0.66	0.99	0.84	0.29	0.15	0.32	105	12	239	2.8	160	16	279	0.84	106	8.5	0.53
PFCR/S	0.52	1.0	0.75	0.36	0.12	0.40	75	22	142	0.2	160	16	325	0.86	116	9.0	0.49
PFCR/B	0.51	1.0	0.83	0.26	0.11	0.32	75	20	182	0.2	160	16	337	0.95	123	8.8	0.50
PFCR/R	0.57	1.0	0.93	0.25	0.14	0.29	75	22	462	0.2	93	15	343	0.92	119	8.8	0.50
PFDR/R	0.77	0.99	0.87	0.25	0.15	0.29	97	9	450	2.8	160	16	272	0.99	131	9.0	0.49
PFDR/CR	0.76	0.94	0.86	0.25	0.18	0.29	97	9	462	19.0	93	15	343	0.88	115	8.8	0.50
LFDR-TC	0.60	0.98	0.87	0.20	0.11	0.22	85	-	532	3.8	200	12	361	1.07	137	8.8	0.50
FMDF	0.48	0.98	0.42	0.25	0.08	0.29	100	17	462	0.5	93	15	343	1.27	161	8.8	0.50
LCNT	0.37	0.98	0.91	0.20	0.07	0.22	55	-	532	2.1	200	12	361	1.16	144	8.6	0.51

[a]SS = Subsystem
[b]Coll. = Collector
[c]Bal. = Balance

Table A-23. COST AND PERFORMANCE SUMMARY FOR 0.3 MW_e INDUSTRIAL SYSTEMS (NOMINAL CF = 0.6)

	Performance Factors						Cost Factors							Resultant Costs			
	Annual Efficiencies										Storage SS[a]						
Generic System	Collection SS[a]	Transport SS[a]	Storage SS[a]	Conv SS[a]	System Annual	Engine Eff. @ Design Point	Coll.[b] Cost ($/m^2)	Receiver Cost ($/m^2)	Eng/Gen Cost ($/kW$_e$)	Transport Cost ($/m^2)	($/kW)	($/kWh)	Bal.[c] of Plant ($/kW$_e$)	Capital Cost ($ x 10^6)	Energy Cost (mills/kW$_e$h)	O&M Cost (mills/kW$_e$h)	Actual Capacity Factor
PFDR/S	0.67	0.99	0.85	0.37	0.20	0.42	105	12	134	2.8	160	16	268	0.78	89	9.4	0.60
PFDR/B	0.66	0.99	0.86	0.29	0.16	0.32	105	12	239	2.8	160	16	279	0.97	106	7.8	0.60
PFCR/S	0.52	1.0	0.81	0.36	0.13	0.40	75	22	142	0.2	160	16	325	1.01	109	7.7	0.60
PFCR/B	0.51	1.0	0.83	0.26	0.11	0.32	75	20	102	0.2	160	16	337	1.20	125	7.5	0.62
PFCR/R	0.57	1.0	0.84	0.25	0.13	0.29	75	22	462	0.2	93	15	343	1.08	114	7.6	0.61
PFDR/R	0.77	0.99	0.82	0.26	0.14	0.29	97	9	450	2.8	160	16	272	1.25	131	7.6	0.61
PFDR/CR	0.76	0.94	0.77	0.25	0.17	0.29	97	9	462	19.0	93	15	343	1.04	113	7.7	0.60
LFDR-TC	0.60	0.98	0.73	0.20	0.10	0.22	85	-	532	3.8	200	12	361	1.28	133	7.6	0.62
FMDF	0.48	0.98	0.73	0.25	0.10	0.29	100	17	462	0.5	93	15	343	1.38	143	7.6	0.61
LCNT	0.37	0.98	0.87	0.20	0.07	0.22	55	-	532	2.1	200	12	361	1.32	139	7.7	0.60

[a]SS = Subsystem
[b]Coll. = Collector
[c]Bal. = Balance

Table A-24. COST AND PERFORMANCE SUMMARY FOR 0.3 MW_e INDUSTRIAL SYSTEMS (NOMINAL CF = 0.7)

	Performance Factors						Cost Factors							Resultant Costs			
	Annual Efficiencies										Storage SS[a]						
Generic System	Collection SS[a]	Transport SS[a]	Storage SS[a]	Conv SS[a]	System Annual	Engine Eff. @ Design Point	Coll.[b] Cost ($/m^2)	Receiver Cost ($/m^2)	Eng/Gen Cost ($/kW$_e$)	Transport Cost ($/m^2)	($/kW)	($/kWh)	Bal.[c] of Plant ($/kW$_e$)	Capital Cost ($ x 10^6)	Energy Cost (mills/kW$_e$h)	O&M Cost (mills/kW$_e$h)	Actual Capacity Factor
PFDR/S	0.67	0.99	0.81	0.37	0.19	0.42	105	12	134	2.8	160	16	268	0.93	88	8.4	0.71
PFDR/B	0.66	0.99	0.82	0.29	0.15	0.32	105	12	239	2.8	160	16	279	1.13	106	7.0	0.69
PFCR/S	0.52	1.0	0.78	0.37	0.13	0.40	75	22	142	0.2	160	16	325	1.18	108	6.9	0.70
PFCR/B	0.51	1.0	0.81	0.27	0.11	0.32	75	20	182	0.2	160	16	337	1.37	123	6.8	0.71
PFCR/R	0.57	1.0	0.92	0.25	0.14	0.29	75	22	462	0.2	93	15	343	1.23	112	6.9	0.71
PFDR/R	0.77	0.99	0.79	0.26	0.13	0.29	97	9	450	2.8	160	16	272	1.44	132	7.0	0.69
PFDR/CR	0.76	0.94	0.72	0.25	0.16	0.29	97	9	462	19.0	93	15	343	1.20	114	7.0	0.68
LFDR-TC	0.60	0.98	0.71	0.20	0.10	0.22	85	-	532	3.8	200	12	361	1.45	132	6.9	0.70
FMDF	0.48	0.98	0.93	0.25	0.12	0.29	100	17	462	0.5	93	15	343	1.54	142	7.0	0.69
LCNT	0.37	0.98	0.80	0.20	0.06	0.22	55	-	532	2.1	200	12	361	1.51	138	7.0	0.69

[a]SS = Subsystem
[b]Coll. = Collector
[c]Bal. = Balance

Table A-25. COST AND PERFORMANCE SUMMARY FOR 0.3 MW_e INDUSTRIAL SYSTEMS (NOMINAL CF = 0.8)

	Performance Factors						Cost Factors							Resultant Costs			
	Annual Efficiencies										Storage SS[a]						
Generic System	Collection SS[a]	Transport SS[a]	Storage SS[a]	Conv SS[a]	System Annual	Engine Eff. @ Design Point	Coll.[b] Cost ($/m^2)	Receiver Cost ($/m^2)	Eng/Gen Cost ($/kW$_e$)	Transport Cost ($/m^2)	($/kW)	($/kWh)	Bal.[c] of Plant ($/kW$_e$)	Capital Cost ($ x 10^6)	Energy Cost (mills/kW$_e$h)	O&M Cost (mills/kW$_e$h)	Actual Capacity Factor
PFDR/S	0.67	0.99	0.71	0.37	0.17	0.42	105	12	134	2.8	160	16	268	1.13	93	7.8	0.81
PFDR/B	0.66	0.99	0.76	0.29	0.14	0.32	105	12	239	2.8	160	16	279	1.44	114	6.3	0.80
PFCR/S	0.52	1.0	0.69	0.37	0.11	0.40	75	22	142	0.2	160	16	325	1.45	115	6.3	0.80
PFCR/B	0.51	1.0	0.73	0.27	0.09	0.32	75	20	182	0.2	160	16	337	1.66	130	6.3	0.81
PFCR/R	0.57	1.0	0.83	0.25	0.13	0.29	75	22	462	0.2	93	15	343	1.39	112	6.3	0.80
PFDR/R	0.77	0.99	0.71	0.26	0.12	0.29	97	9	450	2.8	160	16	272	1.88	146	6.3	0.81
PFDR/CR	0.76	0.94	0.77	0.25	0.16	0.29	97	9	462	19.0	93	15	343	1.42	112	6.3	0.80
LFDR-TC	0.60	0.98	0.65	0.20	0.09	0.22	85	-	532	3.8	200	12	361	1.72	137	6.4	0.79
FMDF	0.48	0.98	0.62	0.25	0.09	0.29	100	17	462	0.5	93	15	343	1.89	147	6.3	0.81
LCNT	0.37	0.98	0.66	0.20	0.05	0.22	55	-	532	2.1	200	12	361	1.81	143	6.4	0.79

[a]SS = Subsystem
[b]Coll. = Collector
[c]Bal. = Balance

Table A-26. COST AND PERFORMANCE SUMMARY FOR 1 MW_e INDUSTRIAL SYSTEMS (NOMINAL CF = 0.3)

	Performance Factors						Cost Factors							Resultant Costs			
	Annual Efficiencies										Storage SS[a]						
Generic System	Collection SS[a]	Transport SS[a]	Storage SS[a]	Conv SS[a]	System Annual	Engine Eff.@ Design Point	Coll.[b] Cost ($/m^2)	Receiver Cost ($/m^2)	Eng/Gen Cost ($/kW$_e$)	Transport Cost ($/m^2)	($/kW)	($/kWh)	Bal.[c] of Plant ($/kW$_e$)	Capital Cost ($ x 10^6)	Energy Cost (mills/kW$_e$h)	O&M Cost (mills/kW$_e$h)	Actual Capacity Factor
PFDR/S	0.67	0.99	0.99	0.35	0.23	0.42	105	12	134	3.2	160	16	152	0.98	76	16.3	0.30
PFDR/B	0.66	0.99	0.99	0.28	0.18	0.32	105	12	239	3.2	160	16	166	1.35	91	12.6	0.32
PFCR/S	0.57	1.0	0.97	0.35	0.13	0.40	75	26	155	0.3	160	16	181	1.44	94	12.5	0.30
PFCR/B	0.56	1.0	0.98	0.27	0.13	0.30	75	26	200	0.3	160	16	186	1.50	100	12.7	0.31
PFCR/R	0.59	1.0	1.0	0.28	0.13	0.30	75	20	510	0.3	0	0	192	1.86	125	13.1	0.31
PFDR/R	0.77	0.99	0.95	0.25	0.16	0.29	97	9	450	3.2	160	16	160	1.67	113	13.1	0.31
PFDR/CR	0.76	0.92	1.0	0.26	0.16	0.29	97	9	510	21.0	0	0	193	1.87	125	13.1	0.31
LFDR-TC	0.60	0.97	1.0	0.20	0.10	0.23	85	-	580	4.2	0	0	204	2.08	137	13.1	0.31
FMDF	0.48	0.99	0.89	0.26	0.12	0.30	100	17	510	0.7	93	15	192	2.42	147	11.4	0.33
LCNT	0.37	0.97	0.85	0.21	0.07	0.23	55	-	580	2.3	200	12	204	2.41	158	13.2	0.30

[a]SS = Subsystem
[b]Coll. = Collector
[c]Bal. = Balance

Table A-27. COST AND PERFORMANCE SUMMARY FOR 1 MW_e INDUSTRIAL SYSTEMS (NOMINAL CF = 0.4)

	Performance Factors						Cost Factors							Resultant Costs			
	Annual Efficiencies										Storage SS[a]						
Generic System	Collection SS[a]	Transport SS[a]	Storage SS[a]	Conv SS[a]	System Annual	Engine Eff. @ Design Point	Coll.[b] Cost ($/m^2)	Receiver Cost ($/m^2)	Eng/Gen Cost ($/kW$_e$)	Transport Cost ($/m^2)	($/kW)	($/kWh)	Bal.[c] of Plant ($/kW$_e$)	Capital Cost ($ x 10^6)	Energy Cost (mills/kW$_e$h)	O&M Cost (mills/kW$_e$h)	Actual Capacity Factor
PFDR/S	0.67	0.99	0.93	0.36	0.22	0.42	105	12	134	3.2	160	16	152	1.60	84	12.1	0.41
PFDR/B	0.66	0.99	0.96	0.28	0.18	0.32	105	12	239	3.2	160	16	166	1.91	100	10.7	0.39
PFCR/S	0.57	1.0	0.92	0.36	0.14	0.40	75	26	155	0.3	160	16	181	2.04	101	10.3	0.41
PFCR/B	0.56	1.0	0.93	0.28	0.13	0.30	75	26	200	0.3	160	16	186	2.11	106	10.5	0.40
PFCR/R	0.59	1.0	0.62	0.28	0.15	0.30	75	20	510	0.3	93	15	192	2.26	111	10.3	0.41
PFDR/R	0.77	0.99	0.90	0.25	0.15	0.29	97	9	450	3.2	160	16	160	2.57	122	10.1	0.42
PFDR/CR	0.76	0.92	0.30	0.26	0.18	0.29	97	9	510	21.0	93	15	193	2.43	113	9.9	0.43
LFDR-TC	0.60	0.97	0.61	0.21	0.11	0.23	85	-	580	4.2	200	12	204	2.73	133	10.4	0.40
FMDF	0.48	0.99	0.32	0.26	0.12	0.30	100	17	510	0.7	93	15	192	2.99	138	10.0	0.42
LCNT	0.37	0.97	0.74	0.21	0.07	0.23	55	-	580	2.3	200	12	204	3.31	146	10.5	0.40

[a]SS = Subsystem
[b]Coll. = Collector
[c]Bal. = Balance

Table A-28. COST AND PERFORMANCE SUMMARY FOR 1 MW_e INDUSTRIAL SYSTEMS (NOMINAL CF = 0.5)

	Performance Factors						Cost Factors							Resultant Costs			
	Annual Efficiencies																
Generic System	Collection SS[a]	Transport SS[a]	Storage SS[a]	Conv SS[a]	System Annual	Engine Eff. @ Design Point	Coll.[b] Cost ($/m^2)	Receiver Cost ($/m^2)	Eng/Gen Cost ($/kW$_e$)	Transport Cost ($/m^2)	Storage SS[a] ($/kW)	Storage SS[a] ($/kWh)	Bal.[c] of Plant ($/kW$_e$)	Capital Cost ($ x 10^6)	Energy Cost (mills/kW$_e$h)	O&M Cost (mills/kW$_e$h)	Actual Capacity Factor
PFDR/S	0.67	0.99	0.84	0.37	0.20	0.42	105	12	134	3.2	160	16	152	2.03	84	10.4	0.51
PFDR/B	0.66	0.99	0.90	0.29	0.17	0.32	105	12	239	3.2	160	16	166	2.49	103	9.0	0.48
PFCR/S	0.57	1.0	0.86	0.37	0.14	0.40	75	26	155	0.3	160	16	181	2.53	100	8.8	0.50
PFCR/B	0.56	1.0	0.86	0.29	0.14	0.30	75	26	200	0.3	160	16	186	2.67	106	8.8	0.50
PFCR/R	0.59	1.0	0.59	0.28	0.14	0.30	75	20	510	0.3	93	15	192	2.73	107	8.7	0.51
PFDR/R	0.77	0.99	0.85	0.25	0.14	0.29	97	9	450	3.2	160	16	160	3.36	126	8.6	0.52
PFDR/CR	0.76	0.92	0.79	0.26	0.17	0.29	97	9	510	21.0	93	15	193	2.87	110	8.6	0.52
LFDR-TC	0.60	0.97	0.58	0.21	0.10	0.23	85	-	580	4.2	200	12	204	3.34	130	8.8	0.50
FMDF	0.48	0.99	0.79	0.26	0.12	0.30	100	17	510	0.7	93	15	192	3.56	134	8.6	0.51
LCNT	0.37	0.97	0.90	0.21	0.07	0.23	55	-	580	2.3	200	12	204	3.63	136	8.6	0.52

[a]SS = Subsystem
[b]Coll. = Collector
[c]Bal. = Balance

Table A-29. COST AND PERFORMANCE SUMMARY FOR 1 MW_e INDUSTRIAL SYSTEMS (NOMINAL CF = 0.6)

	Performance Factors						Cost Factors							Resultant Costs			
	Annual Efficiencies																
Generic System	Collection SS[a]	Transport SS[a]	Storage SS[a]	Conv SS[a]	System Annual	Engine Eff. @ Design Point	Coll.[b] Cost ($/m^2)	Receiver Cost ($/m^2)	Eng/Gen Cost ($/kW$_e$)	Transport Cost ($/m^2)	Storage SS[a] ($/kW)	Storage SS[a] ($/kWh)	Bal.[c] of Plant ($/kW$_e$)	Capital Cost ($ x 10^6)	Energy Cost (mills/kW$_e$h)	O&M Cost (mills/kW$_e$h)	Actual Capacity Factor
PFDR/S	0.67	0.99	0.85	0.37	0.20	0.42	105	12	134	3.2	160	16	152	2.48	85	9.3	0.60
PFDR/B	0.66	0.99	0.85	0.29	0.16	0.32	105	12	239	3.2	160	16	166	3.14	102	7.7	0.60
PFCR/S	0.57	1.0	0.81	0.37	0.15	0.40	75	26	155	0.3	160	16	181	3.09	97	7.5	0.63
PFCR/B	0.56	1.0	0.84	0.28	0.13	0.30	75	26	200	0.3	160	16	186	3.28	105	7.6	0.61
PFCR/R	0.59	1.0	0.62	0.28	0.15	0.30	75	20	510	0.3	93	15	192	3.10	104	7.8	0.59
PFDR/R	0.77	0.99	0.82	0.26	0.14	0.29	97	9	450	3.2	160	16	160	4.05	127	7.6	0.61
PFDR/CR	0.76	0.92	0.78	0.26	0.17	0.29	97	9	510	21.0	93	15	193	3.31	109	7.8	0.59
LFDR-TC	0.60	0.97	0.78	0.21	0.11	0.23	85	-	580	4.2	200	12	204	3.91	126	7.7	0.60
FMDF	0.48	0.92	0.77	0.26	0.12	0.30	100	17	510	0.7	93	15	192	4.13	132	7.7	0.60
LCNT	0.37	0.97	0.89	0.21	0.07	0.23	55	-	580	2.3	200	12	204	4.08	132	7.8	0.59

[a]SS = Subsystem
[b]Coll. = Collector
[c]Bal. = Balance

Table A-30. COST AND PERFORMANCE SUMMARY FOR 1 MW_e INDUSTRIAL SYSTEMS (NOMINAL CF = 0.7)

	Performance Factors						Cost Factors							Resultant Costs			
	Annual Efficiencies																
Generic System	Collection SS[a]	Transport SS[a]	Storage SS[a]	Conv SS[a]	System Annual	Engine Eff. @ Design Point	Coll.[b] Cost ($/m^2)	Receiver Cost ($/m^2)	Eng/Gen Cost ($/kW$_e$)	Transport Cost ($/m^2)	Storage SS[a] ($/kW)	Storage SS[a] ($/kWh)	Bal.[c] of Plant ($/kW$_e$)	Capital Cost ($ x 10^6)	Energy Cost (mills/kW$_e$h)	O&M Cost (mills/kW$_e$h)	Actual Capacity Factor
PFDR/S	0.67	0.99	0.79	0.37	0.19	0.42	105	12	134	3.2	160	16	152	2.95	85	8.5	0.71
PFDR/B	0.66	0.99	0.83	0.29	0.16	0.32	105	12	239	3.2	160	16	166	3.80	107	7.0	0.69
PFCR/S	0.57	1.0	0.79	0.37	0.13	0.40	75	26	155	0.3	160	16	181	3.56	98	6.9	0.71
PFCR/B	0.56	1.0	0.82	0.29	0.13	0.30	75	26	200	0.3	160	16	186	3.70	104	7.0	0.69
PFCR/R	0.59	1.0	0.78	0.28	0.15	0.30	75	20	510	0.3	93	15	192	3.63	99	6.8	0.72
PFDR/R	0.77	0.99	0.71	0.26	0.12	0.29	97	9	450	3.2	160	16	160	4.73	129	6.9	0.70
PFDR/CR	0.76	0.92	0.89	0.26	0.18	0.29	97	9	510	21.0	93	15	193	3.93	107	6.8	0.71
LFDR-TC	0.60	0.97	0.72	0.21	0.10	0.23	85	-	580	4.2	200	12	204	4.51	125	7.0	0.69
FMDF	0.48	0.99	0.83	0.26	0.12	0.30	100	17	510	0.7	93	15	192	4.87	129	6.8	0.72
LCNT	0.37	0.97	0.83	0.21	0.07	0.23	55	-	580	2.3	200	12	204	4.87	130	7.0	0.69

[a]SS = Subsystem
[b]Coll. = Collector
[c]Bal. = Balance

Table A-31. COST AND PERFORMANCE SUMMARY FOR 1 MW_e INDUSTRIAL SYSTEMS (NOMINAL CF = 0.8)

	Performance Factors						Cost Factors							Resultant Costs			
	Annual Efficiencies																
Generic System	Collection SS[a]	Transport SS[a]	Storage SS[a]	Conv SS[a]	System Annual	Engine Eff. @ Design Point	Coll.[b] Cost ($/m^2)	Receiver Cost ($/m^2)	Eng/Gen Cost ($/kW$_e$)	Transport Cost ($/m^2)	Storage SS[a] ($/kW)	Storage SS[a] ($/kWh)	Bal.[c] of Plant ($/kW$_e$)	Capital Cost ($ x 10^6)	Energy Cost (mills/kW$_e$h)	O&M Cost (mills/kW$_e$h)	Actual Capacity Factor
PFDR/S	0.67	0.99	0.71	0.37	0.17	0.42	105	12	134	3.2	160	16	152	3.81	94	7.8	0.81
PFDR/B	0.66	0.99	0.72	0.29	0.14	0.32	105	12	239	3.2	160	16	166	4.60	109	6.3	0.81
PFCR/S	0.57	1.0	0.74	0.37	0.11	0.40	75	26	155	0.3	160	16	181	4.64	111	6.3	0.80
PFCR/B	0.56	1.0	0.74	0.29	0.12	0.30	75	26	200	0.3	160	16	186	4.55	110	6.4	0.79
PFCR/R	0.59	1.0	0.77	0.28	0.14	0.30	75	20	510	0.3	93	15	192	4.01	98	6.4	0.79
PFDR/R	0.77	0.99	0.70	0.26	0.12	0.29	97	9	450	3.2	160	16	160	6.13	143	6.3	0.81
PFDR/CR	0.76	0.92	0.79	0.27	0.17	0.29	97	9	510	21.0	93	15	193	4.50	108	6.3	0.80
LFDR-TC	0.60	0.97	0.63	0.21	0.09	0.23	85	-	580	4.2	200	12	204	5.51	130	6.3	0.80
FMDF	0.48	0.99	0.65	0.26	0.10	0.30	100	17	510	0.7	93	15	192	5.68	135	6.3	0.80
LCNT	0.37	0.97	0.74	0.21	0.06	0.23	55	-	580	2.3	200	12	204	5.40	132	6.4	0.78

[a]SS = Subsystem
[b]Coll. = Collector
[c]Bal. = Balance

SERI

APPENDIX B

COST AND PERFORMANCE SIMULATION

The performance and life cycle cost of each generic system was modeled with the system simulation, BALDR-1, which consists of three interfaced computer models: FIELD, POWER, and ECON. Each of these models may be run independently or may be coupled and run as a set. The FIELD code models the optical and thermal performance of the collector field and thermal transport, the POWER code, the power conversion and energy storage components, the ECON code, the initial capital cost of the power plant, and the life-cyle busbar energy cost. A flow chart of the system simulation is shown in Fig. B-1.

B.1 FIELD CODE

The FIELD code is a second-order simulation based on a similar code previously developed by the Aerospace Corporation with modifications by JPL [B-1] and Batelle Pacific Northwest Laboratories (PNL) [B-2]. The FIELD code uses 15-min incremental meteorological data read from a weather tape. The FIELD code currently models the performance of collector subsystems in four ways depending on the type of collector subsystem being modeled. There are separate modules to calculate the optical and thermal performance of each generic collector type. If other collector types need to be modeled, additional optical and thermal performance modules can be added.

The output from FIELD is a set of daily arrays of the thermal energy collected from the field of collectors (ECF). Each daily array contains 96 records of ECF, one record corresponding to each simulation time step. The option exists to average ECF into hourly increments, resulting in an array of 24 values of ECF for each day. Several other variables are also passed to the POWER code, such as ambient temperature, unit collector area, etc.

B.2 POWER CODE

Like the FIELD code, POWER is a second-order simulation based on the Aerospace computer code as modified by JPL [B-1] and Batelle PNL [B-2]. POWER differs from the earlier codes because it provides the option of using different control algorithms for both the operation of power conversion equipment and the dispatch of electrical and thermal storage. Its control algorithm differs from control strategies used in previous power codes in six areas:

(1) The capability to model both thermal and electrical storage for the same system is specifically included;

(2) A weighting factor may be used to reduce the value of electricity delivered above plant rating;

(3) Overload operation of the power conversion equipment may be allowed;

(4) Thermal storage is modeled in series with the receiver and power conversion equipment at approximately receiver outlet temperature;

(5) The decision to dispatch energy from the collector field is made for the current time step and models the type of control likely to be used in actual plants; and

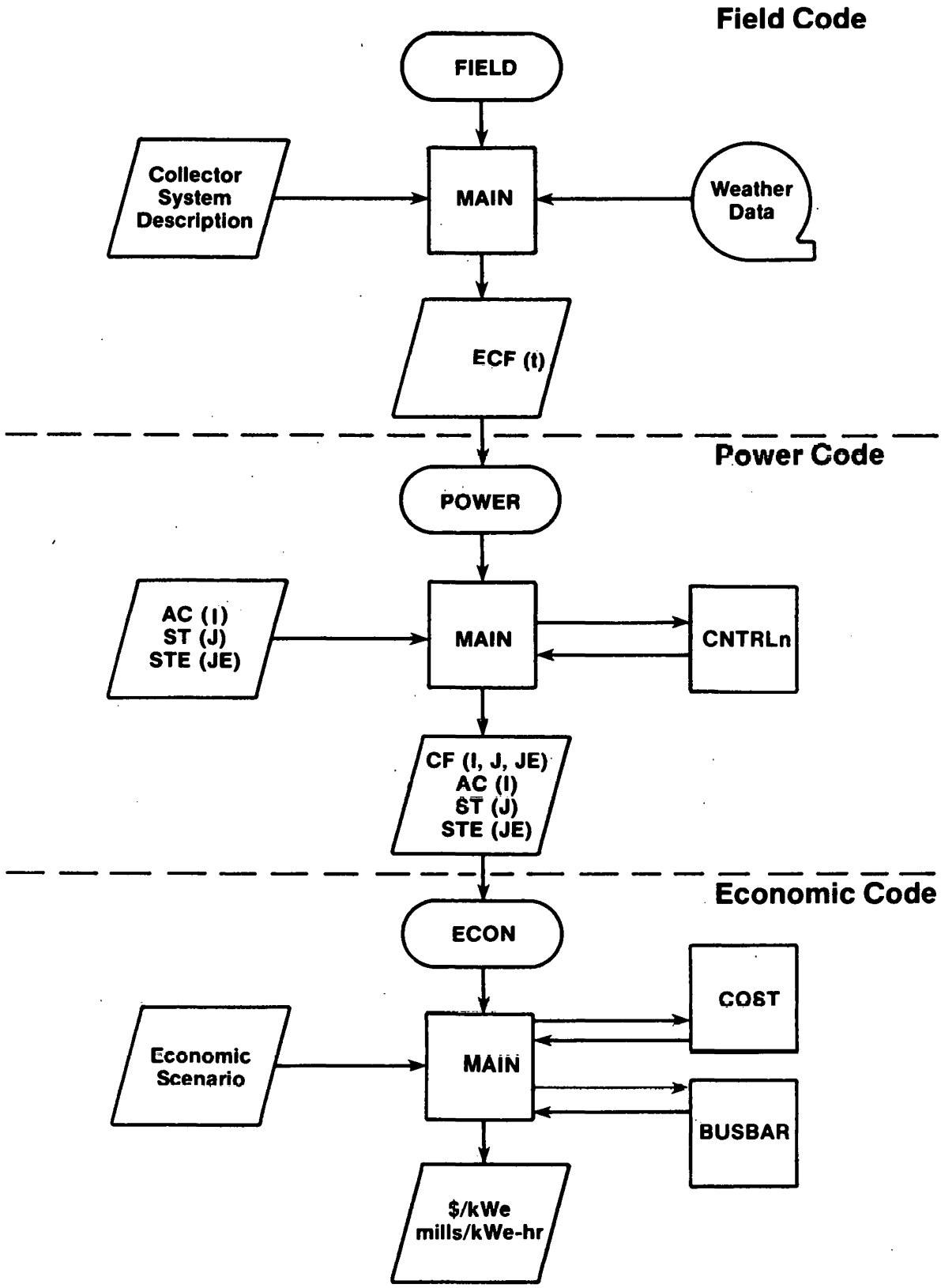

Figure B-1. Simplified Flow Chart for BALDR-1 Performance and Cost Simulation Codes

(6) Depletion of thermal storage is limited to the value that will assure a hot start-up the following morning.

Component models in POWER were written in several levels of detail according to their impact on plant performance, including table look-up with linear interpolation, and explicit calculation based on both time dependent and independent variables.

The POWER code calculates the electricity delivered to the grid at each time step and sums it for one year. The total electrical energy delivered during the year is divided by the total electricity that could have been delivered had the plant operated at rated capacity for the entire year, thus yielding the plant capacity factor, CF, which is calculated for each plant in a set of configurations comprised of different collector field sizes (AC), thermal storage sizes (ST), and electrical storage sizes (STE).

Each calculated CF, together with the corresponding AC, ST, and STE, is output for use by the ECON code. The plant rated capacity and generator size are also output to ECON.

B.3 ECON CODE

The ECON code includes two major subroutines, COST and BUSBAR, that are based on codes originially written by JPL [B-1, B-3]. Using the output from POWER, ECON determines a capital cost and a life-cycle busbar energy cost for each plant configuration based on either the thermal energy or the electrical energy produced, thus allowing the plant to be modeled as a producer of either electricity or process heat.

Subroutine COST uses unit costs as inputs to determine the cost streams for both capital expenditures and O&M. Capital costs are determined for each of four subsystems: (1) collector and receiver, (2) electrical and thermal storage, (3) power conversion, and (4) miscellaneous, including land, thermal and electrical transport, and spares and contingencies. These costs currently are distributed over the plant construction period as a uniform series of payments. With slight modifications to the code, COST could also create a nonuniform cost stream.

Subroutine BUSBAR is based on the Utility-Owned Solar Electric Systems (USES) model, a conventional present value analysis adapted for solar electric power plants by JPL [B-4]. It calculates the busbar energy cost in constant-year dollars that will generate system-resultant revenues equal to the system-resultant costs. The inputs for BUSBAR represent two types of information: system cost data and accounting information. The cost data consists of the arrays of capital costs and O&M costs that are generated in subroutine COST. Escalation rates are input for capital and O&M in addition to the general inflation rate.

The accounting information, the second group of input data, represents the variables that are used to determine the cost of capital. From this data, the discount rate, fixed charge rate, and the capital recovery factor are determined in BUSBAR.

B.4 REFERENCES

B-1. El Gabalawi, N. et al. A Modularized Computer Simulation Program for Solar Thermal Power Plants. JPL 5102-80. Pasadena, CA: Jet Propulsion Laboratory; July 1978.

B-2. Bird, S. Modification of the JPL Solar Thermal Simulation Code for Use in the PNL Small Solar Thermal Power Plant Systems Analysis. Richland, WA: Battelle Pacific Northwest Laboratory; 19 July 1978.

B-3. Slonski, M. L. Energy Systems Economic Analysis (ESEA) Methodology and User's Guide. JPL 5101-102. Pasadena, CA: Jet Propulsion Laboratory; 15 February 1979.

B-4. Doane, J. et al. The Cost of Energy from Utility-Owned Solar Electric Systems: A Required Revenue Methodology for ERDA/EPRI Evaluations. JPL 5040-29. Pasadena, CA: Jet Propulsion Laboratory; June 1976.

APPENDIX C

A RANKING METHOD USING MULTIATTRIBUTE DECISION ANALYSIS

For a complete technology assessment, one must construct not only the system model, but also the value model to provide a reasonable ranking of technological options. Technology assessments very often generate large quantities of useful data concerning the performance, cost, and impacts of technological options, while making the choice among the options dependent on subjective concluding arguments that expose few, if any, logical steps in the decision making. Some studies even draw no conclusions.

As stated by R. A. Howard, "Decision analysis is a term that describes a combination of philosophy, methodology, practice, and application useful in the formal introduction of logic and preferences to the decisions of the world." [C-1] The decision analysis in this study helped to construct and test a value model (previously described) and to provide a defensible ranking of options for solar thermal power supply in the mid-1990s. There are many methods of decision analysis in use today, although some are inapplicable to this study. For example, most ranking problems require a multiobjective optimization that allows for much uncertainty in data. Multiattribute decision analysis (MADA) is suited to this class of decision problem. Other methods such as multiobjective suboptimization, Delphi techniques, bidding games, or simple pair-wise comparison techniques might have been used. However, the selected method is straightforward and has been successfully used in similar previous studies. SERI, Battelle PNL, and JPL agreed upon the merits of MADA and agreed to use this approach.

C.1 MULTIATTRIBUTE DECISION ANALYSIS

During the late 1960s and early 1970s, methods for dealing with decisions involving multiple, sometimes conflicting, objectives were developed and applied by several decision analysts. Actual applications of multiattribute decision analysis during this time helped to demonstrate and refine the method.

The wide range of decision problems to which the method has been applied since 1960 testifies to its flexibility. For instance, the method has been applied to problems as disparate as determining optimum blood bank policies in a Massachusetts hospital [C-3] and the ranking and selection of nuclear power plant sites in the Northwest [C-4]. A short list of the applications of multiattribute decision analysis to problems relating to energy is shown in Table C-1.

As applied to this study, multiattribute decision analysis is described in a report by Feinberg et al. [C-5]. This appendix describes the definition of the problem, questionnaire development and interviews, and the actual ranking of this decision analysis.

The problem was first reduced from an objective to a set of independent criteria that are measured by quantitative or subjective attributes. Because the complexity of the formal analysis does not allow the consideration of more than ten attributes, it is necessary to select attributes that are: (1) important to the decision, (2) independent, (3) measurable, (4) differentiable characteristics of the options being considered, and (5) familiar to the decision maker.

Table C-1. PREVIOUS APPLICATIONS OF MULTI-ATTRIBUTE DECISION ANALYSIS IN ENERGY-RELATED STUDIES

Problem	Sponsor
Selection of suitable sites for new large-scale nuclear generating stations in Washington and Oregon	Washington Public Power Supply System
Ranking of proposed pumped storage sites in Arizona	Arizona Public Service Co.
Environmental assessment of solar energy system alternatives	EPRI
Comparing underground versus surface siting for nuclear power plants	Sandia
Selection for a site for a solar total energy system pilot project	Sandia

During the second step, interviews were conducted with decision makers or their surrogates to obtain the proper data that could be used in a simulation of a decision maker's thought process. A simple method of questioning was developed for use in this study, permitting assessment of utility preferences over the scale of each attribute and the relative weighting of each attribute in a short series of lottery-type questions.

In the third and last step, results of the interviews were used to calculate the coefficients of a multiplicative form of the utility function. Given the actual attribute values of a system, the value of this function is an absolute and quantitative measure of the utility or preference of the system to the decision maker. An ordering of these values then provided a ranking.

The absolute ranking of any one decision maker is not usually definitive for a technology ranking; therefore, comparison of the consistency in the ranking among decision makers must be performed. The method is advantageous in that the sensitivity of the ranking can be tested with respect to differences among decision makers. Furthermore, the sensitivity of the ranking to uncertainties in the estimate of attribute values for each system was tested. These sensitivity tests helped ensure confidence in the final ranking over a wide range of user preferences and probable system performance and cost.

Multiattribute decision analysis represents significant progress in technology assessment studies, focusing quantitatively on the problem. The method offers a complete pattern of rational analysis from assumptions to final conclusions and leaves few, if any, areas of information gaps or unclear logic. Conclusions may be tested both with respect to new

data and uncertainties in preferences and technical information. Multiattribute decision analysis allows the analyst to learn about the problem and to defend the analysis; also, it allows the critic to effectively question the assumptions and conclusions of the study.

C.2 REFERENCES

C-1. Howard, R. A. "The Foundation of Decision Analysis," IEEE Transactions on System Science and Cybernetics. Vol. SSC-4. (No. 3): September 1968; p. 211.

C-2. Keeney, R. L.; Raiffa, H. Decisions with Multiple Objectives: Preferences and Value Tradeoffs. New York, NY: John Wiley & Sons; 1976.

C-3. Jennings, J. B. "An Analysis of Hospital Blood Bank Whole Blood Inventory Control Policies," Transfusions. Vol. 8; 1968; pp. 335-342.

C-4. Keeney, R. L.; Nair, K. "Decision Analysis for the Siting of Nuclear Power Plants-The Relevance of Multiattribute Utility Theory," Proceedings of the IEEE, Vol. 63; 1975; pp. 494-501.

C-5. Feinberg, A.; Kuehn, T. J.; Miles, R. F. Jr. Decision Analysis for Evaluating and Ranking Small Solar Thermal Power System Technologies. JPL 5103-47. Pasadena, CA: Jet Propulsion Laboratory; 15 January 1979.

SERI

APPENDIX D

PROBLEM STRUCTURE

Decisions are often made by using an amalgamation of objectives, goals, values, constraints, tradeoffs, etc., that must be logically arranged to be comprehended. Creating a logical problem structure from a simple issue statement is a process worthy of thorough research when applying a formal decision analysis. The results of the decision analysis are very sensitive to the problem structure selected and to the class of decision makers analyzed. In this Appendix, the process of selecting criteria and attributes for the small power systems ranking study is discussed. Explicit and implicit assumptions and prerequisites are outlined that limit the scope to which the conclusions of this study may be applied.

D.1 OBJECTIVE OF THE STUDY

Decision problems must have a well-defined objective for which available alternatives will be suitable. The goal of this study was to find the most appropriate long-term ranking of solar thermal technologies for small electric power applications in the 1 MW_e to 10 MW_e range and the 0.1 MW_e to 1 MW_e range.

The broad scope of this statement is somewhat covert. For example, applications and therefore interested decision makers cover a range that includes electric utility companies, small communities, isolated or remote facilities, rural villages, mines, light industrial parks, agriculture, and developing countries [D-1]. Moreover, the variety of applications is accompanied by diversity in user performance requirements. A decision was made early in this study to concentrate on grid-connected utility applications for 1-10 MW_e systems. At sizes below one megawatt, however, the systems are generally too small to elicit utility interest. The other applications offered more promise for systems in the 0.1-1 MW_e range.

Two points need to be clarified. The concept of what is appropriate in the long-term is unclear. "Long term" is defined here as the years 1990 and beyond. The word "appropriate" may take on multiple meanings. In this study, appropriateness is defined by the importance of various issues as viewed by the decision maker. The "most appropriate" ranking is, therefore, responsive to the broadest range of user requirements and concerns.

D.2 CRITERIA AND ATTRIBUTES

To apply the methods of Multiattribute Decision Analysis, one needs a set of attributes upon which the performance of the alternatives can be measured and judged. Attributes are the measure of the degree to which an alternative satisfies a criterion of performance. Criteria, then, are related to the stated subobjectives. The relationship of these parts of the problem structure is shown schematically in Fig. D-1.

Many criteria can relate to any one subobjective. For example, in considering the subobjective to "minimize overall cost" of the solar thermal power system, one could consider capital cost, O&M cost, levelized energy cost, payback period, annualized cost, total required revenue, operating ratios, or production cost. Each criterion represents a

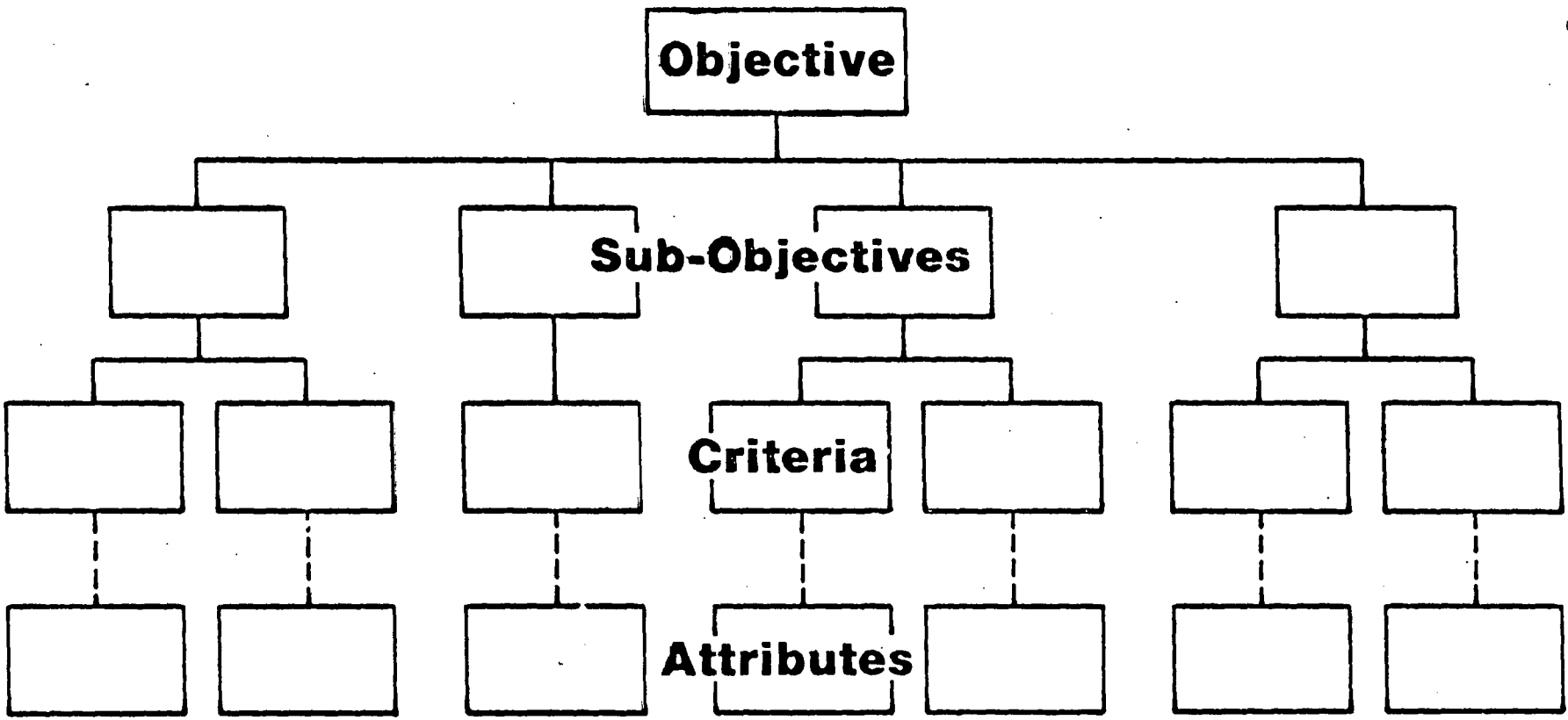

Figure D-1. Problem Hierarchy for Multiattribute Decision Analysis

specific concern in the issue of "overall cost," and each may be important to various decision makers. The complexity of the multiattribute decision analysis interview does not allow for more than one or two of these criteria to be considered in each subobjective. Furthermore, certain criteria represent similar properties, creating the potential for confusion. As a result, the criteria must be selectively chosen with the informal input of selected decision makers.

In addition to requiring a criteria set that is restricted enough to be comprehended in the formal interviews, other properties of criteria should be satisfied:

- Importance - the criteria should represent significant concerns;
- Measurability - the criteria should be measurable, either objectively or subjectively;
- Independence - within the ranges considered, changes in one attribute should not affect preferences or trade-offs between other attributes;
- Differentiability - the options must not have all identical values for a given attribute; and
- Familiarity - the attributes should be described in terms familiar to the decision maker.

Attributes are the specific, measurable system properties that represent criteria. For example, the criterion of capital cost is represented by the attribute total initial installed cost in $\$/kW_e$ of capacity. Capital cost might also have been represented by the present value of total construction costs, in dollars, or by the annualized capital cost, in dollars, over thirty years. The first attribute definition was chosen because $\$/kW_e$ was more familiar to decision makers.

Once the set of criteria and objectives was agreed upon, a range of values for each attribute was assigned. The scale of an attribute used in multiattribute decision analysis must be broad enough to include all important options. The attribute scale does not need to extend on its worst end to encompass all the alternatives. If a single criterion is deemed important enough that options not meeting a minimum or maximum attribute value could be dropped from consideration, an initial screening of options can take place to avoid attribute scales in which much of the worst end of the scale is unacceptable. Where there is a large unacceptable range, the decision maker is often tempted to implicitly shorten the attribute scale, leading the decision analyst to misinterpret the results of the questionnaire unless a check is provided. On the other hand, the attribute range must be broad enough to envelop data uncertainty and disparity among options. The definition and range of the attributes used in the 1-10 MW_e are given in Table D-1; those for the 0.1-1 MW_e phase follow in Table D-2.

D.3 DIFFERENCE IN PROBLEM STRUCTURE (1-10 MWe VERSUS 0.1-1 MW_e)

For the 0.1-1 MW_e study, the problem structure was altered somewhat from that used in the 1-10 MW_e phase. The changes reflect different user requirements; smaller system sizes; the desire to concentrate interview time on key attributes; and knowledge gained by the study team during 1-10 MW_e phase.

The subobjectives and criteria from the 0.1-1 MW_e task are compared to those from the 1-10 MW_e task in Fig. D-2. The subobjective of Maximizing Return is used in the

Table D-1. DEFINITIONS OF CRITERIA AND ATTRIBUTES AND THEIR RANGES (1-10 MW_e SYSTEMS)

Subobjective	Criteria	Attributes	Definition	Units	Range
Cost	Operating Cost	Levilized O&M Cost	The 30-year levelized nominal revenue requirement for costs associated with equipment overhaul, minor replacement, routine maintenance, site maintenance, operating labor costs, etc.	mills/kWh	5.0 to 15.0
	Capital Cost	Unit Capacity Initial Costs	The total initial capital cost per unit of kW_e capacity installed, including direct transformer and switchyard costs. In 1978 dollars for a plant installed in 1990.	$/$kW_e$ Installed	1400 to 3400
Performance	Reliability	Annual Capacity Factor	$\frac{\text{Total Actual Annual Energy Output (kWh)}}{\text{8760 (h/yr) x Rated Capacity (kW}_e\text{)}}$	%	0.20 to 0.70
Impacts	Environmental Impacts	Relative Environmental Impacts	Relative environmental impacts, including effects of land use, toxic or polluting discharge, water use and construction impacts including requirements for scarce materials.	Subjective Scale	0 to 5
	Safety Impacts	Relative Safety	Relative safety of solar thermal plants, including hazards from concentrated sunlight, volatile or toxic fluids, and high temperature or pressure.	Subjective Scale	0 to 5
Commercial Potential	R&D Requirements	R&D Expenditures	Total funding from all sources required to bring a concept from current state of cost and performance to that predicted in 1990.	$ Required Between 1980 and 1990 for One Concept	10 million 500 million
	Range of Application	Relative Market Applicability	Relative market applicability, as related to cogeneration potential, application load flexibility, siting, and construction suitability to various markets.	Subjective Scale	0 to 5

Table D-2. DEFINITIONS OF CRITERIA AND ATTRIBUTES AND THEIR RANGES (0.1-1 MW_e SYSTEMS)

Subobjective	Criteria	Attributes	Definition	Units	Range
Cost	Capital Cost	Unit Capacity Initial Costs	The total initial capital cost per unit of kW_e capacity installed, including direct transformer and switchyard costs, in 1978 dollars for a plant installed in 1990.	$\$/kW_e$ Installed	1000-4000
Performance	Reliability	Annual Capacity Factor	$\frac{\text{Total Actual Annual Energy Output (kWh)}}{\text{8760 (h/yr) x Rated Capacity } (kW_e)}$	%	.30 to .88
Return on Investment	Payback	Simple Payback	Time required to recover capital investment through savings in operating expenses. Simple payback, while including tax credit, ignores inflation and income tax. $\frac{\text{(1 - Tax Credit) x Total Capital Investment}}{OC_A - OC_s}$ OC_A= Annual operating cost of alternative OC_s= Annual operating cost of solar plant	Years	5-30

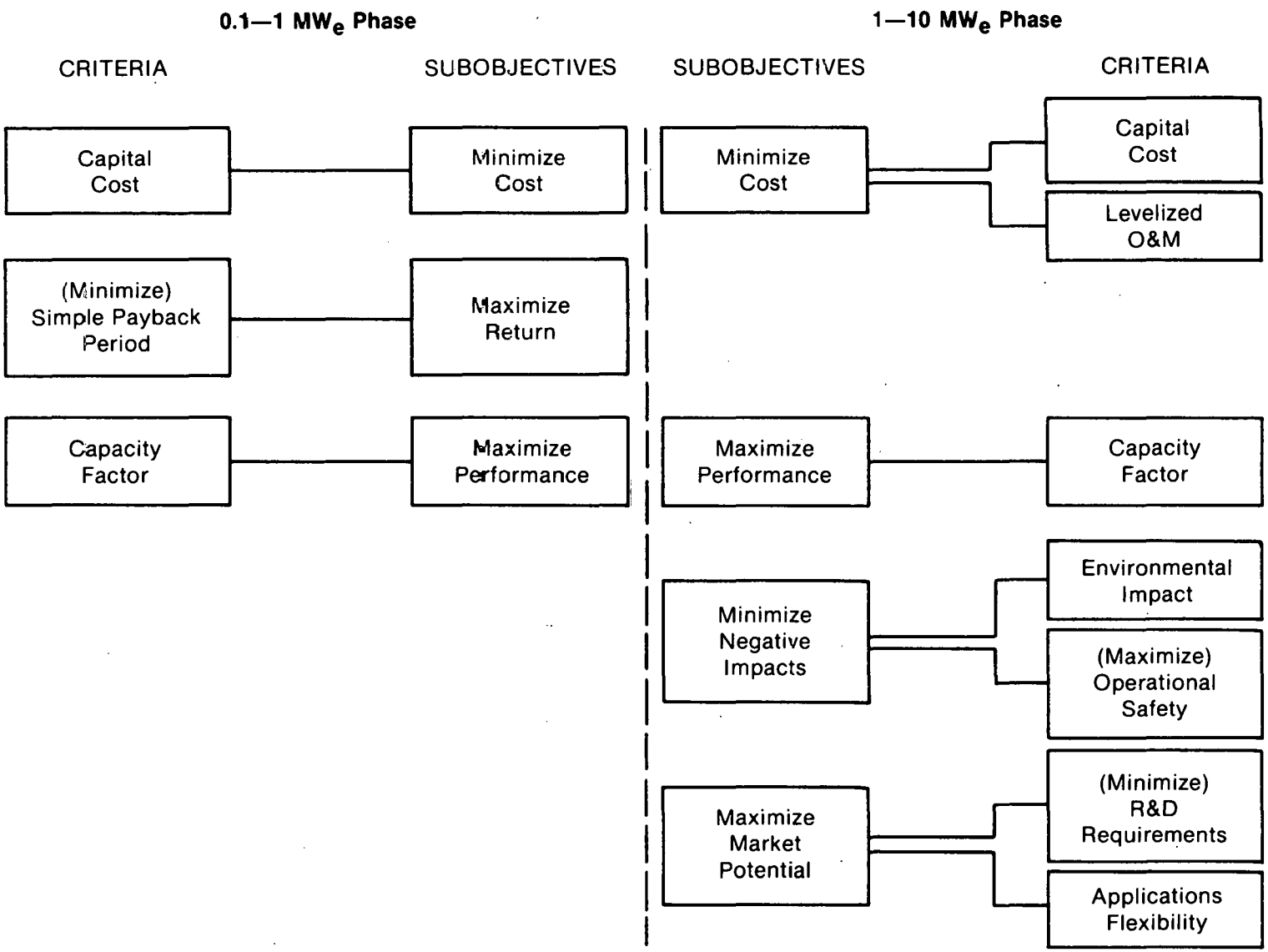

Figure D-2. Comparison of Subobjectives and Criteria Between 0.1-1 MW_e and 1-10 MW_e Studies

0.1-1 MW_e ranking, while the subobjectives of Minimizing Negative Impacts and Maximizing Market Potential, modeled in the earlier study, were eliminated for the smaller systems. In addition, Simple Payback appears as a new criterion, replacing Levelized O & M, Environmental Impact, Operational Safety, R&D Requirements, and Applications Flexibility. Because the changes were imposed on the problem structure at the criterion level, the rationale for the revisions is discussed from that standpoint.

The economic criterion, Levelized O & M, was replaced with Simple Payback because the latter was more familiar to the decision makers. Although simple payback may have drawbacks as a tool for economic evaluation, its widespread use and acceptance by potential small power system users makes it reasonable for this study. The new criterion was also removed from the subobjective Minimize Cost and placed in the new category of Maximize Return to reflect the different perspective provided by this determinant. Simple Payback is defined here as the number of years required to recover the cost of investment, irrespective of finance charges, through operating cost savings.

Other changes in the list of criteria involve deletions rather than modifications. R&D requirements and Operational Flexibility were relatively insignificant in the decision process in the 1-10 MW_e study. Preliminary contacts with potential users in the latter study phase reaffirmed this conclusion. Therefore, it was felt that the interview time could better be used by concentrating on the most important criteria. Environmental Impact and Operational Safety both proved marginally significant decision determinants during the 1-10 MW_e phase. However, the combination of smaller systems and preferences of the new group of decision makers led to the removal of both criteria. The move to smaller systems lessens the concern of small users, but not necessarily policy makers, over perceived negative environmental impacts. Operational Safety also gained a new perspective at the smaller system sizes. At sizes of 1 MW_e or less, there is not enough capacity to absorb the additional O & M costs imposed by the use of unsafe technologies. Preliminary discussions with decision makers indicated that systems in the 0.1-1 MW_e range presenting significant environmental or unusual safety problems would not be worth considering as a power source. Therefore, both of the criteria were removed from the interviews and incorporated in the ground rules of the study: whenever a choice concerning system selection or operation arose that had environmental or safety consequences, the safest and most environmentally benign options were always selected.

D.4 REFERENCES

D-1. Feinberg, A.; Kuehn, T. J.; Miles, R. F. Jr. Decision Analysis for Evaluating and Ranking Small Solar Thermal Power System Technologies. Vol. II, JPL 5103-47. Pasadena, CA: Jet Propulsion Laboratory; 15 January 1979; p. 7.

D-2. Keeney, R. L.; Nair, K. "Nuclear Siting Using Decision Analysis." San Francisco, CA: Woodward-Clyde Consultants; July 1977.

SERI

APPENDIX E

PROFILES OF DECISION MAKERS

This Appendix summarizes the results of the assessment of basic decision maker preferences. Information was received through interviews that were designed to obtain quantitative data in the form of single attribute preference functions and on the relative weights placed upon those attributes (see Appendix C). Also, much information on the opinions of the various user groups was obtained through statements made outside the context of the formal interview procedure. The quantitative and qualitative results of this user preference study reveal the needs and values of future users of small solar thermal power systems. These results provide an independent description of the decision-maker profile.

E.1 DECISION MAKERS IN 1-10 MW_e STUDY

Between February and May of 1979, more than 30 interviews were conducted in electric utility companies (large and small investor owned, public, municipal, and rural cooperatives), utility consultants, trade journals, public regulatory bodies, and R&D personnel, both technical and nontechnical. The individuals and organizations interviewed are listed in Appendix G. A questionnaire gathered most information in these interviews. From the 30 interviews, the results of 24 interviews were of sufficient quality to be included in the final sample analyzed for the rankings presented in Section 4.0. Six of the earliest interviews were used as a pretest and are not considered in the final sample.

E.1.1 QUANTITATIVE RESULTS

The purpose of the interviews was to obtain quantitative data that could be used in a multiattribute decision analysis to "simulate" real decisions among users (utilities) and interest groups (R&D staff). Data was sought on:

- Reference attribute choice,
- Relative attribute weighting; and
- Preference functional forms.

In the interview, the decision maker chose a reference attribute and gave trade-off information that defined the relative weights of the attributes. The choice of a reference attribute indicates the criterion that decision maker considers most important; the relative weights indicate how heavily each of the other attributes weighs in the final decision. Table E-1 summarizes the selection of reference attributes for this sample of decision makers, and Table E-2 indicates the synthesis of the relative weights into an average value for each class of decision maker and for the group as a whole. As might be expected, attributes related to cost (capital cost, energy cost, as reflected in capacity factor, and operating costs) are consistently rated highest. The major differences between the utilities and the R&D group are:

- R&D personnel chose capacity factor as the reference attribute more often than the utility representatives, who were evenly split between capacity factor and capital cost;

- The R&D group weighted capacity factor equally with capital cost and more heavily than did the utilities; and
- Utilities placed a higher weighting on O&M costs than did their R&D counterparts.

Table E-1. REFERENCE ATTRIBUTE CHOICE (1-10 MW_e SYSTEMS)

Attribute	Utilities	R&D	Overall
Capital cost	50	38	44
Capacity factor	42	62	52
Levelized O&M	8	0	4
Others	0	0	0

Table E-2. RELATIVE ATTRIBUTE WEIGHTS (NORMALIZED TO 1.0) (1-10 MW_e SYSTEMS)

Utilities Attribute	Weight	R&D Attribute	Weight	Overall Attribute	Weight
Capital cost	0.27	Capital cost	0.27	Capital cost	0.27
Capacity factor	0.22	Capacity factor	0.27	Capacity factor	0.24
O&M	0.19	Applications	0.11	O&M	0.15
Applications	0.08	O&M	0.11	Applications	0.09
Environment	0.08	Safety	0.11	Safety	0.09
R&D	0.08	R&D	0.07	R&D	0.09
Safety	0.08	Environment	0.07	Environment	0.09

The relative desirability of specific values of the attributes, as determined in the form of preference functions, was also required. Figure E-1 contrasts the utility and R&D average preference curves for each attribute.

E.1.2 QUALITATIVE RESULTS

The interview process was not impersonal: there was considerable opportunity to discuss issues and concerns outside the context of the very specific assessment of attribute preference functions and scaling factors. Decision makers were interested in spending two or more hours to learn more about solar technologies and to discuss the implications of responses to formal questions.

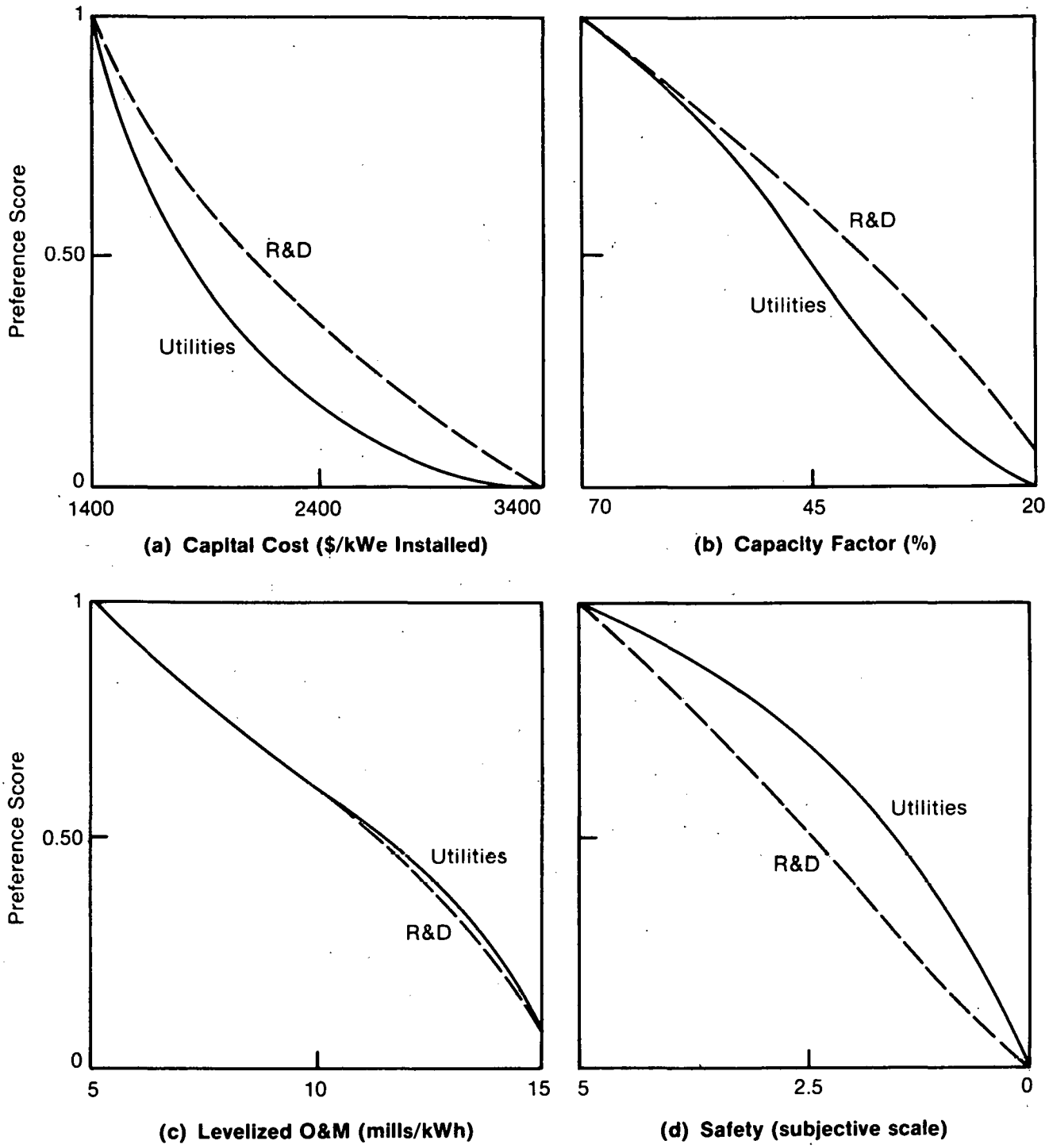

Figure E-1. Preference Functions [1–10 MW_e Systems]

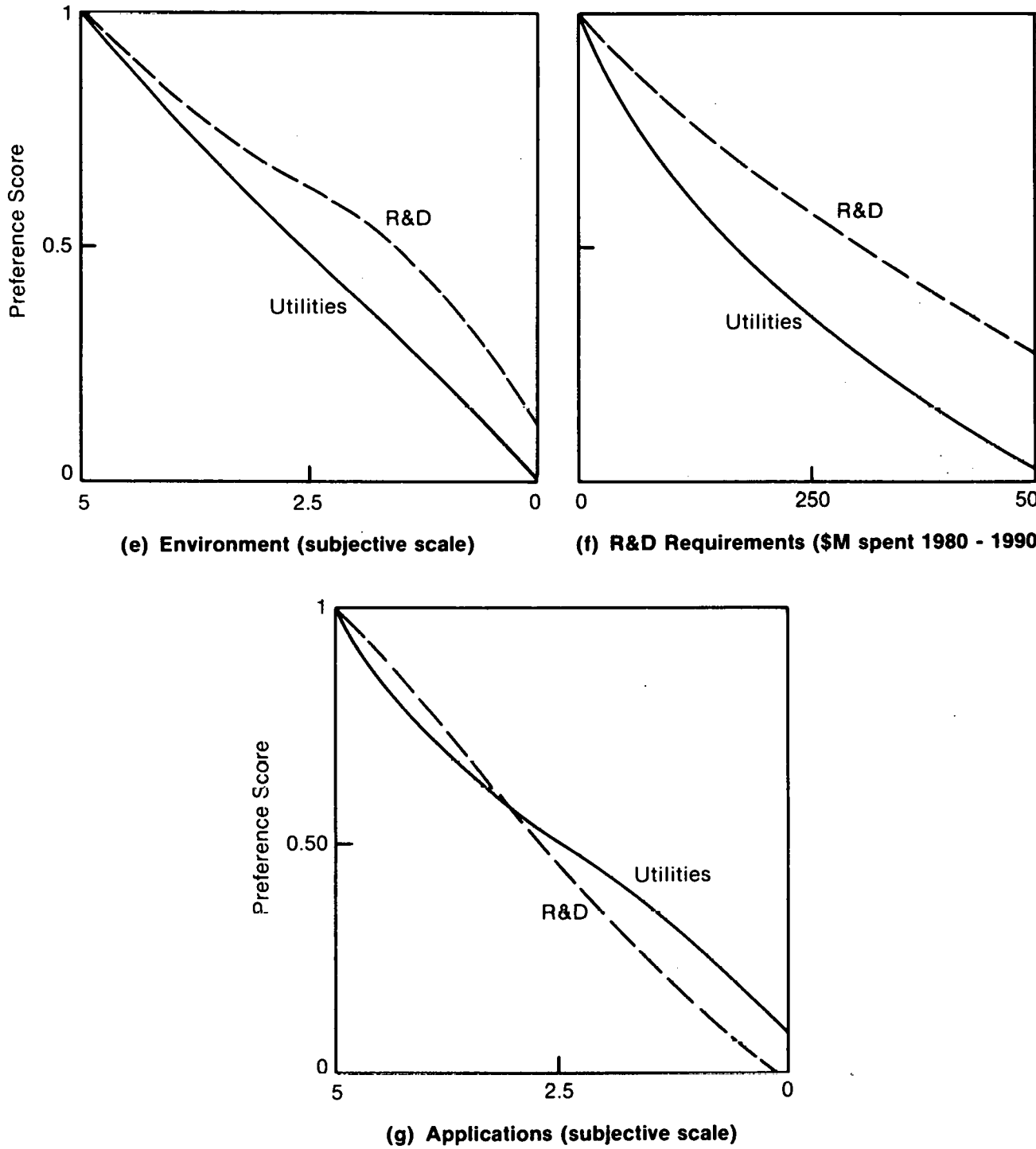

Figure E-1. Preference Functions (continued)

Opinions on some issues diverged as widely between individuals in the same company as between types of utility. However, these issues surfaced consistently:

- Capital Requirements - Although many utilities recognize the strong possibility of much higher capital costs for new capacity in the next decade, they are incredulous that alternatives could not be found that offer initial costs less than $2,500/kW$_e$ (1978 dollars) in 1990. Therefore, solar system capital costs in excess of this limit will be unacceptable, probably regardless of low operating costs.
- Rate-payer Concerns - As publicly regulated concerns, utilities are constrained to provide reliable service at the lowest possible price. Concerns over capital requirements and, thus, the utility's ability to raise capital impact rate requirements. Flow-through fuel cost adjustments have made capital cost an increasingly important factor in determination of electricity rates. However, generation expansion still depends heavily on formulae that establish adequate reliability and minimum revenue requirements. Production costs of up to 15 mills/kWh, as the range of levelized O&M cost in this study extends, are not of concern. Production costs of coal plants with scrubbers are on the order of 15 mills/kWh today. However, most utilities believe that levelized energy costs above 60 mills/kWh to 70 mills/kWh in 1990 (1978 dollars) will be unacceptable, and they anticipate providing average system energy costs of 50 mills/kWh in 1990.
- Reliability - During the interviews, reliability was a consistent issue, although annual capacity factor as calculated in this study did not adequately address it. Low capacity factors, although acceptable in conventional standby units where availability is high and capacity credit is available, were not acceptable for units where capacity credit was not available. Interviewees were more interested in the ability of solar systems to meet daily and seasonal utility loads. Interest in fuel availability and fuel diversity or long-term reliability are considered advantageous to solar energy.
- Regulatory Problems - According to utility personnel, solar systems must meet all minimum standards for environment and safety. However, most agreed that to the extent that regulatory costs and lead time could be reduced, solar power systems could be advantageous.
- Uncertainty - Utilities expressed a distrust of undeveloped technology, and, therefore, were unwilling to put value judgements on R&D expenditures. Adequate pilot demonstration, proven and reliable hardware, and strong vendor/customer warrantees and service backup would be required before a commercial market could appear. Most agreed that solar technology would not move directly from the government laboratories into the marketplace and that significant private development, testing, and marketing must intercede.

E.2 DECISION MAKERS IN THE 0.1-1 MW$_e$ STUDY

This section introduces the decision makers interviewed for MADA applied in the 0.1-1 MW$_e$ study. The discussion here encompasses three areas: (1) identification of decision makers and typical uses—a discussion of why the selected users were chosen, who they are, and uses for small solar thermal systems; (2) quantitative results—data extracted from decision makers during interviews needed to simulate their decision process; and (3) qualitative results—information on opinions and needs of the users obtained outside the context of the formal questionnaire.

E.2.1 IDENTIFICATION OF DECISION MAKERS/TYPICAL USES

The choice of decision makers to participate in this study provides a sampling of the potential market for 0.1-1 MW_e Solar Thermal Systems. Individuals and institutions were selected according to these criteria:

- If they are paying high costs for electricity or power;
- If they have uses in the 0.1-1 MW_e range;
- If they are open to an innovative technology such as solar; and
- If they have access to sufficient land acreage for a system.

Five categories of users (and those users interviewed) in the study include:

- Small Communities
  - -Vail, Colo.
  - -La Junta, Colo.
  - -Holyoke, Colo.
- Minerals Industry
  - -AMOCO Production Company
  - -Vitrane Corporation (Montana Gold Mine)
- Small Government Institutions
  - -Boys Reformatory (Buena Vista, Colo.)
  - -National Park Service
- Military Bases
  - -Buckley Air Force Base
  - -Air Force Academy
- Agriculture
  - -Colorado State University Agriculture Extension Service

Typical electric costs for this group were 60-90 mills/kWh, but ranged from 25 mills to 100 mills/kWh. Costs varied at times for single users between base, intermediate, and peak power. Low cost of energy and prohibitively high cost of land or its inaccessability precluded users on major power grids or within large urban areas. Potential uses for systems of this size varied from total power requirement to specific isolated equipment. A list of uses (by user category) suggested during the interviews include:

- Small communities
  - -Total Power Requirements
  - -Intermediate or Peak Load Requirements
- Minerals Industry
  - -Pipeline Booster Stations
  - -Compressor Stations
  - -Total Mine Requirements
- Small Government Institutions
  - -Total Power Requirements
  - -Intermediate or Peak Load Requirements
  - -Visitors' Centers
- Military Bases
  - -Noncritical Power
- Agriculture
  - -Irrigation
  - -Dairy Farming

In addition to these potential users, members of the R&D community were selected to provide insights and to pretest the interview questionnaire. From a total of eighteen interviews, fourteen provided the information for the system ranking.

E.2.2 QUANTITATIVE RESULTS

The purpose of the interviews was to obtain quantitative data that could be used to simulate real decisions. Data was obtained for:

- Reference attribute choice,
- Relative attribute weighting, and
- Single attribute preference functions.

During the interview the decision maker chose a reference attribute and gave trade-off information that defined the relative weights of the three attributes. The choice of a reference attribute indicates that criterion which the decision maker considers most important; the relative weights indicate how heavily each of the attributes weighs in the final decision. Table E-3 summarizes the choice of reference attribute and the average weight for each of the attributes. The range of weights given in the interviews is also included.

Table E-3. REFERENCE ATTRIBUTE CHOICE AND RELATIVE ATTRIBUTE WEIGHTING (0.1-1 MW_e SYSTEMS)

Attribute	Average Weight (Normalized to 1.0)	Range of Weights	Per Cent Time Chosen As Reference Attribute
Simple Payback	0.44	0.09-0.84	64
Capacity Factor	0.28	0.06-0.87	22
Capital Cost	0.28	0.04-0.60	14

Simple payback was selected most often as the primary decision criterion. Capacity factor and capital cost were chosen equally.

The relative desirability of specific attributes, as determined in the form of preference functions, was also required. Figure E-2 plots the average preference curves over all fourteen decision makers for each of the attributes and indicates the most extreme curves found in the sample. The curves indicate risk neutrality, but individual variations show a greater shift toward risk aversion than risk proneness at the extreme.

E.2.3 QUALITATIVE RESULTS

In addition to the quantitative data summarized in the previous section, much information concerning user preferences, needs, and constraints was also obtained during the

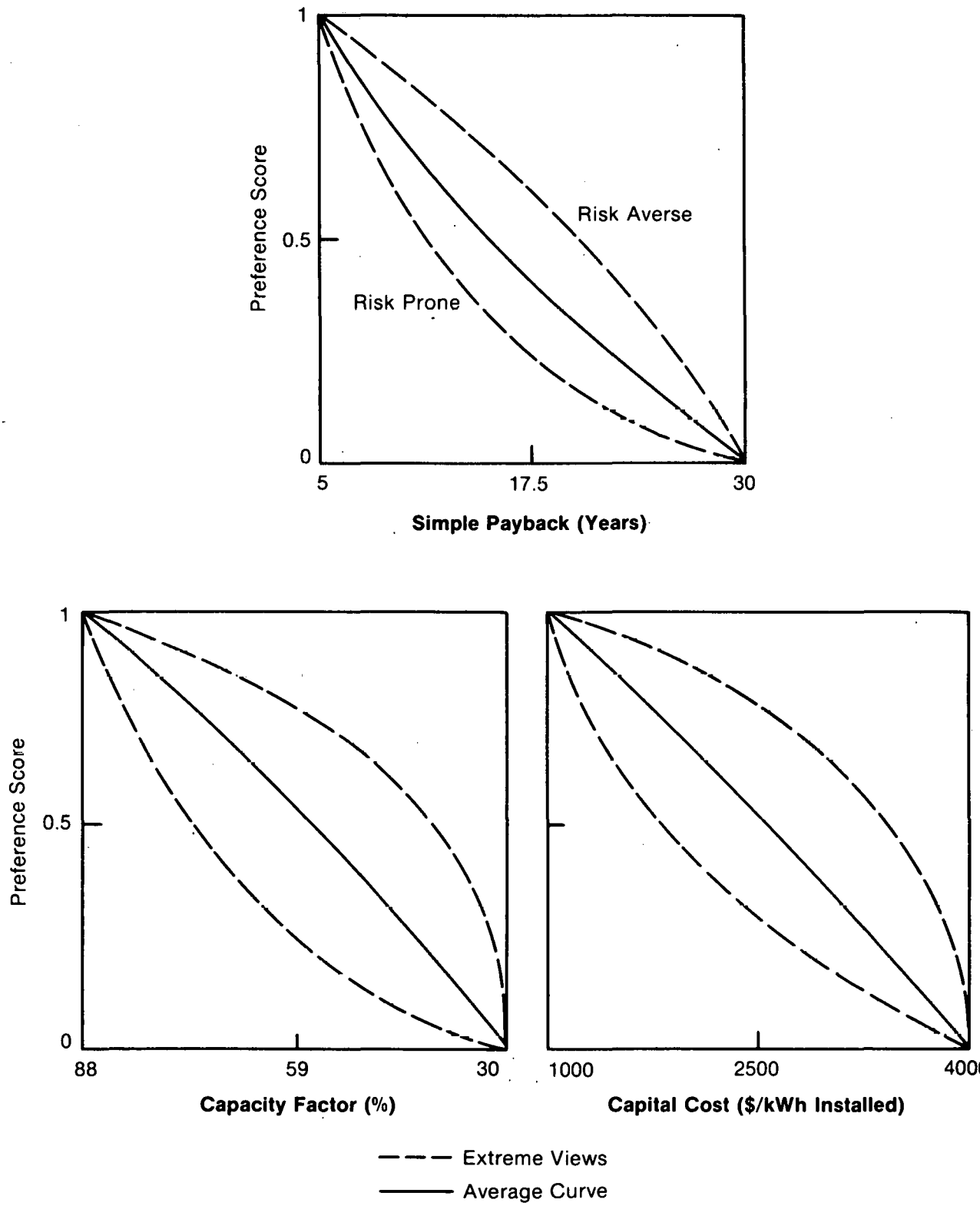

Figure E-2. Preference Functions [0.1–1 MW_e Systems]

interviews. Out of a wide variety of issues, several issues that surfaced consistently include:

- Economic Considerations - Since most users sampled are already paying 60-90 mills/kWh, the busbar energy costs for energy from solar systems were not unreasonable. Users did not balk at the total cost of the system, although they were concerned about obtaining initial funding. Private, profit-directed organizations (especially the minerals industry in which income may not be forthcoming from a project for several years) were interested not only in raising the capital, but also in cashflows in the early years.

  Payback is an issue about which many of the users had definite opinions. Many focused in on a specific length of time, usually about 15 years, and were not interested in anything longer. The minerals industry had a very practical approach: if the system does not pay back within the lifetime of their venture, they would refuse to consider it.

- Reliability & Maintenance - If sufficient data were available to contrast the systems with any degree of accuracy, reliability and maintenance would be an excellent candidate for inclusion as a fourth attribute. "How often do these things break down? Can they be easily maintained by me or by my current maintenance personnel? Is there some assurance I'll be able to meet my load demands reliably?" Such questions depict the concerns of this group. The caution with which some of the group approached solar energy, was best expressed by an old time coal miner: "I don't want the first one—no prototypes—I want a proven technology."

- Alternate Fuel Availability - In response to our ground rule that a backup system should ensure continuous energy and be an alternative to purchasing large amounts of storage, several users mentioned that availability of a backup system was not a foregone conclusion. Users often doubted the availability of diesel fuel or peak load power. Faced with the possibility of no alternative at times, a few decision makers were willing to overlook the high capital cost and a long payback period associated with large amounts of storage in favor of a higher capacity factor.

- Regulatory Problems - The concern was meeting all pertinent standards. If the solar power source did not satisfy any single safety requirement or environmental regulation, the system could not be used. Few users expressed any objections to the land use requirements or environmental effects generally associated with solar technologies. Only a local official from a mountain community wanted the array of heliostats or collectors to be out of sight of the town so that the view of the surrounding mountains would not be tarnished. The system could easily be put on the back side of nearby foothills.

The reception for a solar-based electric power system was encouraging. Some people interviewed were enthusiastic, and if economic conditions were favorable, they would be willing to purchase systems now.

SERI

APPENDIX F

STUDY PARTICIPANTS*

Task Leader: John P. Thornton, Systems Development Branch

Team Members: Kenneth C. Brown,**
Stephen D. Cronin, Computer Systems Branch
Alan L. Edgecombe,**
Joseph G. Finegold, Systems Development Branch
James Gresham, Industrial Applications and Policy Branch
F. Ann Herlevich, Systems Development Branch
John Kowalik, Systems Development Branch
Thomas Kriz, Systems Development Branch
Louise S. Morrison, Buildings Systems Branch
Jeanne R. Pagano,**

Support: Dr. David Benson, Materials Research Branch
Dr. Charles J. Bishop, Systems Development Branch
Marshall Buhl, Computer Systems Branch
Dr. Barry Butler, General Research Division
Dr. Pat Call, Materials Research Branch
Dr. Robert Copeland, Solar Thermal Research Branch
Dr. James W. Doane,**
Dr. Michael Edesess, Industrial Aplications and Policy Branch
Randy Gee, Solar Thermal Engineering Development Branch
Gordon Gross, Materials Research Branch
Bim Gupta, Solar Thermal Program Office
Jon H. Henderson, Building Systems Branch
Dr. T. S. Jayadev,**
Dr. Frank Kreith, Solar Thermal Research Branch
Leroy Lacy, Computer Systems Branch
Joe Lavender, Systems Development Branch
Doug Madison, Computer Systems Branch
Richard Mitchell, **
Robert O'Doherty, Computer Systems Branch
Dr. Ari Rabl, Solar Thermal Research Branch
James Williamson, U.S./Saudi Arabia Program

Consultants: Robert Barber, Barber-Nichols Engineering Company, Arvada, Calif.
Frank M. Swengel, Stanley Consultants, Mascatine, Iowa

---

*All are SERI employees unless otherwise noted.

**No longer with SERI.

SERI

APPENDIX G

INDIVIDUALS AND ORGANIZATIONS INTERVIEWED FOR MULTIATTRIBUTE DECISION ANALYSIS

G.1 Electric Utilities or Utility Industry Representatives (1-10 MW_e Study).

Doug Bauer, American Electric Power
Larry Ciecior, Omaha Public Power District
William Eisele, Tri States Generation and Transmission Associates
Sam Hall, American Electric Power
Gadi Kaplan, IEEE Spectrum
Henry Klaiman, Public Service Company of Colorado
Jerry Krause, Omaha Public Power District
R. F. Kuharich, Colorado Springs Department of Public Utilities
John Nevshemal, Science Application, Inc.
George Parkins, Colorado Public Utilities Commission
Les Pruce, Power
David Reid, Omaha Public Power District
Blair Ross, American Electric Power
Don Sebesta, Electrical World
Frank Swengel, Stanley Consultants
Dan Witt, Omaha Public Power District

G.2 Industrial and Small Community Representatives (0.1-1 MW_e Study).

Fred Dillard, AMOCO Production Company
Chuck Donley, Town of Vail, Colo.
Ralph Hansen, Colorado State University
Ed Kochman, Colorado State Reformatory
Les Lutze, City of Holyoke, Colo.
Ken Pykkonen, Rockwell International Wind Systems
Dick Ryan, Town of Vail, Colo.
Bob Smith, City of La Junta, Colo.
Major Jerry Snider, Buckley Air Force Base
Bob Trent, Vitrane Corporation
Lloyd Walker, Colorado State University
Dwight Wendell, National Park Service

The SERI interviewees represent a wide range of experience, including previous employment with research organizations, architect/engineering firms, and utilities.

Frank Baylin, Buildings Systems Branch
Dr. Robert Copeland, Solar Thermal Research Branch
Tony Eden, Buildings Systems Branch
Joseph Finegold, Systems Development Branch
Theresa Flaim, Utility Application and Policy Branch
Jim Gresham, Industrial Applications and Policy Branch
Ann Herlevich, Systems Development Branch

Dr. T. S. Jayadev,*
Michael Karpuk, Systems Development Branch
Tom Kriz, Systems Development Branch
Joe Lavender, Systems Development Branch
Kathryn Lawrence,*
Jim Margolis, Environmental and Social Impacts Group
Louise Morrison, Buildings Systems Branch
Laxmi Mrig, PV Analysis and Evaluation Branch
Dave Percival, Utility Application and Policy Branch
Dave Schaller, Strategic Planning Branch
Roger Taylor,*
John Thornton, Systems Development Branch

*No longer with SERI

APPENDIX H

SOURCES OF INFORMATION

In addition to the people identified in Appendix F, the following laboratories and contractors made major contributions of information, data, and constructive criticism to the Small Solar Thermal Electric Power Systems Study. Their interest and willingness to assist is acknowledged and appreciated.

Acurex Corporation, Mountain View, Calif.
Aerospace Corporation, El Segundo, Calif.
Argonne National Laboratories, Lisle, Ill.
Battelle Pacific Northwest Laboratories, Richland, Wash.
E-Systems, Garland, Tex.
FMC, Santa Clara, Calif.
Ford Aerospace & Communications Corporation, Newport Beach, Calif.
General Atomic, La Jolla, Calif.
General Electric Company, Valley Forge, Pa.
General Electric Company, Schenectady, N.Y.
Jet Propulsion Laboratory, Pasadena, Calif.
Lawrence Livermore Laboratory, Livermore, Calif.
Martin Marietta Aerospace, Denver, Colo.
McDonnel Douglas Astronautics Company, Huntington Beach, Calif.
Mechanical Technology Incorporated, Latham, N.Y.
NASA Lewis Research Center, Cleveland, Ohio
Sandia Laboratories, Albuquerque, N.M.
Sandia Laboratories, Livermore, Calif.
Sunstrand Corporation, Rockford, Ill.
Texas Technological University, Lubbock, Tex.
University of Chicago, Chicago, Ill.

Document Control Page	1. SERI Report No. TR-351-461	2. NTIS Accession No.	3. Recipient's Accession No.

4. Title and Subtitle
Final Report:
Comparative Ranking of 0.1-10 MW_e
Solar Thermal Electric Power Systems

5. Publication Date
August 1980

6.

7. Author(s)
John Thornton, et al.

8. Performing Organization Rept. No.

9. Performing Organization Name and Address
Solar Energy Research Institute
1617 Cole Boulevard
Golden, Colorado 80401

10. Project/Task/Work Unit No.
3456.10

11. Contract (C) or Grant (G) No.
(C)
(G)

12. Sponsoring Organization Name and Address

13. Type of Report & Period Covered
Technical Report

14.

15. Supplementary Notes
Volume I of 2 volumes

16. Abstract (Limit: 200 words)

This report is part of a two-volume set summarizing the results of a comparative ranking of generic solar thermal concepts designed specifically for electric power generation. The original objective of the study was to project the mid-1990 cost and performance of selected generic solar thermal electric power systems for utility applications and to rank these systems by criteria that reflect their future commercial acceptance. This study considered plants with rated capacities of 1-10 MW_e, operating over a range of capacity factors from the no-storage case to 0.7 and above. Later, the study was extended to include systems with capacities from 0.1-1 MW_e, a range that is attractive to industrial and other non-utility applications.

Volume I summarizes the results for the full range of capacities from 0.1 to 10 MW_e. Volume II presents data on performance and cost and ranking methodology.

17. Document Analysis

a. Descriptors Central Receivers; Distributed Receivers; Point Focus; Line Focus; Parabolic Collectors; Tower Focus Collectors; Parabolic Dish Collectors; Parabolic Trough Collectors; Heliostats; Solar Ponds; Solar Tracking; Solar Heat Engines; ~~[illegible]~~ Stirling Engines; Ranking Cycle Engines; Brayton Cycle Power Systems; Brayton Cycle Engines; Evaluations; Comparative Evaluations; Decision Making; Cost; Market; Performance; Environmental Impacts; Safety, Reliability; Power Range Milli W; Solar Thermal Power Plants

c. UC Categories
62e, 62b, 62d

18. Availability Statement
National Technical Information Service
U.S. Department of Commerce
5285 Port Royal Road
Springfield, Virginia 22161

19. No. of Pages
157

20. Price
$8.00