NREL/SR-210-24040 • UC Category: 1310

Rural Electrification: Waste Biomass Russian Northern Territories

Serge Adamian
ECOTRADE, Inc.
Glendale, CA

NREL technical monitor: Ken Touryan

National Renewable Energy Laboratory
1617 Cole Boulevard
Golden, Colorado 80401-3393
A national laboratory of the U.S. Department of Energy
Managed by the Midwest Research Institute
for the U.S. Department of Energy
Under Contract No. DE-AC36-83CH10093

Prepared under Subcontract No. AAX-6-16752-01

February 1998

NOTICE

This report was prepared as an account of work sponsored by an agency of the United States government. Neither the United States government nor any agency thereof, nor any of their employees, makes any warranty, express or implied, or assumes any legal liability or responsibility for the accuracy, completeness, or usefulness of any information, apparatus, product, or process disclosed, or represents that its use would not infringe privately owned rights. Reference herein to any specific commercial product, process, or service by trade name, trademark, manufacturer, or otherwise does not necessarily constitute or imply its endorsement, recommendation, or favoring by the United States government or any agency thereof. The views and opinions of authors expressed herein do not necessarily state or reflect those of the United States government or any agency thereof.

Available to DOE and DOE contractors from:
Office of Scientific and Technical Information (OSTI)
P.O. Box 62
Oak Ridge, TN 37831
Prices available by calling (423) 576-8401

Available to the public from:
National Technical Information Service (NTIS)
U.S. Department of Commerce
5285 Port Royal Road
Springfield, VA 22161
(703) 487-4650

Printed on paper containing at least 50% wastepaper, including 20% postconsumer waste

FINAL REPORT

PRE-FEASIBILITY EVALUATION

RURAL ELECTRIFICATION: WASTE BIOMASS RUSSIAN NORTHERN TERRITORIES

PREPARED BY:

ECOTRADE, INC.
220 S. Kenwood St., Suite 305
Glendale, CA 91205-1671
Tel: (818) 240-4500 Fax: (818) 240-4501

IN COOPERATION WITH

INTERNATIONAL APPLIED ENGINEERING, INC.

FOR

NATIONAL RENEWABLE ENERGY LABORATORY

SUBCONTRACT NO. AAX-6-16752-01

UNDER

PRIME CONTRACT NO. DE-AC36-83CH10093

December 1997

TABLE OF CONTENTS

Page

ACKNOWLEDGMENTS VI

EXECUTIVE SUMMARY VII

I. OBJECTIVE 1

II. BACKGROUND 2

III. STATUS OF RUSSIA'S GRID-CONNECTED POWER INDUSTRY 2

IV. PILOT PROJECT: 3

1. Select a location for the study and pilot project 3

1.1 Establish selection criteria 4
1.2 Evaluate the specific candidate sites against the selection criteria 4
1.2.1 Geographic and economic information on Arkhangelsk (Archangel) Region 4
1.2.2 Onega District 6
1.2.3 Verkhni-Ozerski village 6
1.3 Select a location for the pilot project 7
1.4 Obtain data for the location under consideration including present and future demand, energy rates and structure, subsidies and cogeneration potential 7

2. Characterize the regional resources with respect to the pilot project 8

2.1 Complete a biomass resource assessment plan for the selected area 8
2.2 Investigate local power and utilities usage, requirements, and needs 8
2.3 Determine the power and fuel transportation resources and logistic issues 9
2.4 Investigate the local labor, construction abilities, and cost 9
2.5 Evaluate maintenance and repair potential 10

3. Select technology options which best meet the needs of the project 11

3.1 Investigate available facility component technologies 11
3.1.1 Material-processing and handling technologies 11
3.1.2 Energy conversion technology 11
3.1.3 Electric production technology 12
3.1.4 Electric conversion technology 12
3.1.5 Pollution control technology 12
3.2 Determine the potential for local supply and fabrication 12
3.3 Investigate the potential and requirements for technology transfer 13
3.3.1 Size of the market in Russia 13
3.3.2 Local manufacturers' interest 14
3.3.3 Availability of affordable credit mechanism for Russian buyers 14

3.3.4 Assurance of long-term contract protection 14
3.4 Establish the options for expansion and replication of the pilot facility 15
3.4.1 Base system design 15
3.4.2 Expansion options 16
3.4.3 Replication options 16
3.5 Optimize the equipment size and value relationships 16
3.6 Specify minimum performance criteria 17

4. Determine the biomass supply infrastructure requirements 18

4.1 Determine the need for independent supply channels 18
4.2 Establish a fair pricing system for biomass fuel supply 18
4.3 Provide for controls for biomass access to meet sustainability issues 18
4.4 Prepare fuel specifications to meet equipment constraints 19

5. Establish the power production costs with respect to alternatives 20

5.1 Provide project pro forma based on project values 20
5.1.1 Cost of waste biomass fuel 20
5.1.2 Cost of operation and maintenance 20
5.1.3 Cost of labor 20
5.1.4 Cost of construction 21
5.1.5 Cost of development and financing 21
5.2 Compare with alternatives presently being utilized 21

6. Investigate ownership and operation scenarios 22

6.1 Determine the present local power ownership, operation, beneficiaries, and ability to pay 22
6.2 Consider a model for private cooperative ownership and operation 23
6.3 Estimate the potential for large private ownership 24
6.4 Evaluate possibilities for establishing hybrid ownership and operation 24

7. Determine the feasibility and costs of local manufacturing and construction 25

7.1 Establish financial strength and reliability of local suppliers and builders 25
7.2 Obtain budget estimates from interested and experienced local and non-local suppliers and builders 25
7.3 Establish volume discounts for multiple projects 26
7.4 Evaluate the technology-transfer issues and potential for joint ventures 26
7.5 Investigate laws protecting proprietary rights and obligations 27

8. Compare the projected cost for biomass to energy with alternatives 28

8.1 Investigate only commercially ready systems that are proven performers 28
8.2 Include other renewable energy technologies such as wind 29
8.3 Assess prospects for distillate fuel, natural gas, and coal as competitive fuel sources 29
8.4 Compare with future commercial alternatives 30

8.5 Consider feasibility of interconnecting one or more centralized biomass-to-energy facilities to other villages via mini-grids 30

9. Determine the feasibility and cost of expansion and replication of the pilot system 32

9.1 Prioritize on-site expansion of up to 100% 32
9.2 Address the cost, logistics, and technical impacts of utilizing the selected technology at other sites 32
9.3 Consider the trade-offs of using modular component technologies versus field-assembled systems 33
9.4 Determine the estimated incremental costs per installed kilowatt for the pilot project and other regions under consideration 33

10. Determine the environmental impacts 34

10.1 Investigate the environmental trade-offs, including ash-disposal problems 34
10.2 Consider global-warming impacts 35
10.3 Address regeneration and sustainability issues 35

11. Determine the range of financing alternatives 37

11.1 Evaluate various financing scenarios involving federal and local governments, multilateral agencies, Global Environmental Facility, local private entities, and international private sources 37
11.2 Establish the level of financial guarantees required for attracting multilateral and/or private financing 38
11.3 Include the impact on local employment and economy 38
11.4 Discuss pros and cons of bundling projects, including other renewable energy projects, to reach a critical mass for independent development, volume discount, and bulk financing 39

12. Propose future independent-development scenarios 40

12.1 Assess the potential for joint ventures with established local companies and the necessary incentives for independent power developers to invest in the project 40
12.2 Discuss technologies that facilitate purchase of power by individual users according to contractual agreements (e.g., load-limited service and power-based tariff) 40
12.3 Evaluate methodology for competitive bidding by interested project developers 41

13. Conclusions on the final decision criteria for the project 42

13.1 Draw conclusions as to the identifiable obstacles to the development of the project and future projects and suggest strategies for mitigation 42
13.1.1 High up-front costs including capital 42
13.1.2 Lack of resource assessment data 42
13.1.3 Lack of reliable legal system to protect contracts 42
13.1.4 Subsidized and uniform residential tariffs discourage demand-side management 42

13.1.5 Lack of institutional capacity to perform resource assessment, project evaluation, sub-lending services, and sub-project operational services 43
13.2 Summarize the project continuation/development opportunities, requirements, and constraints 43

BIBLIOGRAPHY 45

APPENDICES

Appendix A - Annual Cost of Diesel Fuel for Russian Waste Biomass Energy Pilot Project
Appendix B - Cost of Biomass Fuel for Russian Waste Biomass Energy Pilot Project
Appendix C - Cost of Operation and Maintenance for Present and Future Russian Diesel-Fueled Operations
Appendix D - Cost of Operation and Maintenance for Russian Waste Biomass Energy Pilot Project
Appendix E - Labor Cost Estimates
Appendix F - Hard Cost Estimates
Appendix G - Financing and Feasibility Study Cost Estimates
Appendix H - Diesel Engine and District-Heating Boiler Life-Extension Calculations
Appendix I - Criteria and Greenhouse Gas Emissions Offsets
Appendix J - Financial Internal Rate of Return (FIRR), Pro forma, and Economic Internal Rate of Return (EIRR) Evaluations
Appendix K - Mini-Grid Evaluation

ATTACHMENT 1

Maps of Arkhangelsk Region

ATTACHMENT 2

Sample Vendor Information for Biomass-to-Energy Equipment

ATTACHMENT 3

Photographs of Project Site

ATTACHMENT 4

Communication with Russia's Ministry of Fuel and Energy

ATTACHMENT 5

Preliminary Technical Specifications

ACKNOWLEDGEMENTS

The authors thank the following organizations and individuals for their help:

U.S. Department of Energy
Dr. Ken Touryan of the National Renewable Energy Laboratory
Mr. Pavel Bezrukikh of the Russian Ministry of Fuel and Energy
Mr. Valery Kutov of the Russian Ministry of Fuel and Energy
Mr. Sergey Mikhailov of the Russian Federal Center for Renewable Energy
Professor Dmitri Strebkov of the All-Russian Institute for Electrification of Agriculture
The Arkhangelsk Regional Administration
Mr. Vasily Trufan of Onega District Administration
Management of Onegales Joint Stock Company

EXECUTIVE SUMMARY

The primary objective of this pre-feasibility evaluation is to examine the economic and technical feasibility of replacing distillate fuel with local waste biomass in the village of Verkhni-Ozerski, Arkhangelsk Region, Russia. This village is evaluated as a pilot location representing the off-grid villages in the Russian Northern Territories, the sparsely populated far northern and outlying regions of Russia. In the absence of any identified fatal flaws, the pre-feasibility evaluation effort will lead to full feasibility evaluation, financing, and implementation of a small-scale waste biomass-to-energy pilot project.

The U.S. Department of Energy (DOE) has agreed to provide technical assistance to its Russian counterpart in the renewable energy area, the Ministry of Fuel and Energy (MFE). DOE has designated the National Renewable Energy Laboratory (NREL) to provide this assistance. MFE has identified the Northern Territories as a priority area requiring NREL's assistance. The Northern Territories program initially affects about 900 off-grid villages. Biomass and wind energy, and to a lesser extent small hydro (depending on resource availability) are expected to play the dominant role in the program. Geothermal energy may also have a role in the Russian Far East. The Arkhangelsk, Kariela, and Krasnoyarsk Regions, all in the Russian Northern Territories, have abundant forest resources and forest products industries, making them strong candidates for implementation of small-scale waste biomass-to-energy projects.

The 900 or so villages included in the renewable energy program span nine administrative regions and autonomous republics. There are seven autonomous districts within those areas that are inhabited by indigenous minorities. The regional authorities in the Northern Territories proposed these villages to MFE for consideration in the renewable energy program according to the following selection criteria: a) Remote off-grid location, b) high cost of transporting fuel, c) old age of existing power generation equipment, and d) preliminary determination as to availability of alternative energy resources. Inclusion of indigenous minorities in the program was also heavily emphasized.

Verkhni-Ozerski (Upper Lake) is located 75 kilometers (km) to the north of the port of Onega. The logging enterprise Onegales is the primary village employer. A dirt logging road owned by Onegales connects the village to the Onega area. The village, which is 50 km away from the nearest grid line, has a population of about 640 living in 215 apartment units. A power distribution micro-grid supplies electricity to the village. The source of electricity is a small power plant comprised of three 315-kW diesel engines/generators. Depending on the season, one, two, or all three units are operating. A waste-biomass-fueled district-heating facility comprised of four boilers (three operating and one backup) provides hot water to the village.

The residential customers currently pay about 2 cents/kilowatt-hour (/kWh). The distillate fuel to generate power in Verkhni-Ozerski costs about 15-20 cents/kWh. The Onega District Administration is required by law to subsidize the fuel cost charged to the residential ratepayers. Because of the harsh economic climate, however, it has been unable to meet the subsidy burden in recent years.

Verkhni-Ozerski is an attractive site for a pilot project because there are four fishing villages in the area that also lack access to grid power. Because it is the only village with a timber industry, power generated from combustion of the logging waste/by-product can be transmitted to other villages via a future transmission mini-grid. Consequently, the pilot project can address the issue of low-cost grid extension as well as power generation.

Onegales spends about $206,000 annually on distillate fuel—equivalent to about 16% of gross revenues from Verkhni-Ozerski. Because Onegales has two additional logging operations, a cost-effective waste-biomass project will provide the incentive to Onegales to maintain its operations in Verkhni-Ozerski.

The amount of logging waste used in the district-heating furnaces is about 13,000 tonnes per year. The logging mill generates much more waste than is used in the district-heating system. As the outlet low-pressure steam from the electric-generating steam turbine will be redirected to the district-heating system, the amount of wood waste needed for district heating will be reduced. In other words, a portion of wood waste originally targeted for district heating will be redirected to power production.

The peak and base electric-load demands vary from season to season. The pilot project will consist of two phases. In the first phase, a biomass-fueled steam boiler and turbine/generator system will provide 470 kW of net electrical power to the village (base scenario). This capacity will be equivalent to the winter intermediate load. The base scenario system will displace 87% of the distillate fuel presently being consumed by the village power plant each year. The outlet low-pressure steam from the steam turbine will be sent to the hot-water-based district-heating system, reducing the need to fire the district-heating furnaces. During the summer months when the electrical demand is less than 470 kW, excess steam can be circulated in the district-heating system, totally eliminating the need for the hot-water furnaces. Initially, an alternate scenario that uses a 260-kW (net) system will be used for evaluation if availability of adequate capital for the base scenario becomes a limiting factor. The alternate scenario will displace 71% of the distillate fuel presently being consumed by the village power plant each year.

The second phase will evaluate the optimum ways to expand the mini-grid to the four nearby fishing villages. The villages of Purnema, Liamtsa, Una, and Luda have populations of 300, 170, 200, and 200, respectively. Another 470 kW of power-generating capacity will be added to the base 470-kW system upon completion of the optimization evaluation and implementation of power supply agreements with each one of the four surrounding villages.

Onegales is the logical owner/operator of the biomass energy project because it has the financial capability and experience to be the obligor and operator of the plant. In addition, it pays for the distillate fuel and plant operations. The ability to pay for the biomass energy equipment in Verkhni-Ozerski is closely intertwined with the economic and financial health of Onegales. This is because the actual power cost per household is comparable to a single wage earner's income, meaning that village ratepayers cannot afford the unsubsidized power. In other words, Onegales either has to raise the wages of its employees for them to afford the actual cost of power, or it has to continue carrying the subsidy burden. Appendix J shows that Onegales can generate a significant net cash flow out of the waste-biomass-fueled power generation, leading to the conclusion that Onegales should welcome the waste-biomass power option as an affordable, cost-saving business strategy.

The pre-feasibility study demonstrates that the project merits continuation and a full feasibility analysis. The demonstrated rate of return and net positive cash flow (see Appendix J), the willingness of Onegales and local/regional authorities to cooperate, and the immense social benefits are all good reasons to continue the project. The project will also act as a stepping stone for the emerging renewable energy manufacturing base in Russia and establish an institutional capacity to serve additional renewable energy projects throughout the Northern Territories. The need to replace or extend the life of the existing infrastructure—the aging diesel engines and district-heating furnaces—is yet another valid reason to move forward with the project. Besides conducting a full feasibility analysis, project proponents should simultaneously seek pilot-project financing. The World Bank, the U.S. EXIM Bank, the European Bank for Reconstruction and Development, and the Global Environmental Facility are prospective sources for financing such mechanisms.

I. Objective

Russia is a large and uniform market very similar to the United States; however, it has a much larger area. A high intellectual capacity has made the Russian population ready and yearning for a higher standard of living, which includes access to affordable electricity in remote areas. This creates an excellent opportunity to exploit local renewable energy resources, thus eliminating the need to transport fuels and transmit power over long distances. Vast forests make biomass an ideal renewable energy candidate for Russia.

Our primary objective is to examine the economic feasibility of replacing distillate and gasoline fuels with waste biomass as the main fuel source for villages in the sparsely populated, extreme outlying regions of northern Russia (equivalent to 70% of Russia's total land area). Approximately 20 million people live in these scattered and remote regions where the Russian Unified Electric System (UES) grid does not penetrate. Most of these people are connected to smaller, independent power grids, but approximately 8 million of them live in off-grid villages and small towns served by stand-alone generation systems that use either diesel fuel or gasoline. About one-quarter of these off-grid customers live in the Russian Northern Territories—the area encompassing European Russia's extreme northern coastal and arctic regions, northern Siberia, and northern Russia's Far East. The total (urban and rural) population of these territories is about 10 million. The off-grid villages depend on expensive distillate fuel and gasoline transported from remote places for combustion in small boilers and engines. The fuel is used for both electricity generation and district heating. A small fraction (estimated at 10%) of the 8 million off-grid villagers live in small, single-family farms while the balance live in large collective farms, villages, or small settlements.

Typically, diesel generator systems with a capacity of as much as 1 megawatt (MW) serve a collective farm or settlement with a rural enterprise. (There are an estimated 10,000 such systems in Russia.) Smaller gasoline-fueled generator systems of 0.5-5-kilowatt (kW) serve smaller farms or rural enterprises. (There are about 60,000 such systems in Russia.) Historically, the state farming collectives and rural industries received energy practically free of charge. The former Soviet Union's (FSU's) artificial and centralized pricing system kept the price of fuels for energy generation—and even the price of gasoline to transport the fuels to these remote places—very low. Furthermore, the tariff the customers paid was subsidized by the central government and had no relation to the actual cost of power production and delivery. Understandably, locally available renewable energy sources were not used in significant quantities.

Today, newly privatized farms and rural enterprises must pay sharply increased energy prices, thus severely threatening rural economies. Indeed, about half of the stand-alone diesel and gasoline systems used by these enterprises are no longer operating primarily because of high fuel costs, but also because of inadequate maintenance or inability to replace equipment that has exceeded its operating life. As fossil-fuel and new equipment prices in Russia have increased to world market levels, the local governments or village utilities responsible for rate collection are faced with the difficult task of either subsidizing the high costs or passing them on to ratepayers. Consequently, implementing a strategy to replace expensive fossil fuels with lower-priced alternatives has become critically important. Lower fuel prices make power rates more affordable and reduce the need for government subsidies in this economic and budgetary crunch period.

Because Russia is heavily forested, most of the off-grid areas have access to abundant wood and (in many cases) an established timber industry. However, wood wastes have not been used to maximum potential (i.e., for electrical energy production). Establishing village power plants that use this waste biomass seems to be the proper strategy for providing low-cost power to these remote areas. Even in the absence of a timber industry, collection and delivery of biomass solely for energy production may prove to be cost effective.

In addition, implementing a biomass-fueled village energy program would create an opportunity for use of specialty boilers and transfer of U.S. know-how, as well as a market for local and U.S.-based goods and services. This market is large enough—on the order of hundreds and perhaps even thousands of MWs—to attract participation from the U.S. energy industry, provided it can be determined that social, political, financial, technical, and technology-transfer sustainability obstacles can be overcome. A pilot project would help address these issues and lay the foundation for replication of the project in other remote villages. The purpose of this evaluation is to identify the optimum biomass-system architecture, to determine if a full feasibility analysis for the pilot project and replication stages would be worthwhile, to discover any fatal flaws in the plan, and to present the constraints and opportunities for future development.

II. Background

The U.S. Department of Energy (DOE) agreed to provide technical assistance on renewable energy to its Russian counterpart, the Ministry of Fuel and Energy (MFE).. DOE designated the National Renewable Energy Laboratory (NREL) to provide this help. MFE identified the Northern Territories as a priority area requiring NREL's assistance. The program initially affects about 900 villages. Biomass and wind energy, and to a lesser extent small hydro (depending on resource availability), are expected to play the dominant role in the program. Geothermal energy may also have a role in the Russian Far East. Arkhangelsk, Kariela, and the Krasnoyarsk Regions, all located in the Russian Northern Territories, have abundant forest resources and forest products industries, indicating that biomass energy may be a cost-effective alternative in these regions.

The approximately 900 villages included in the renewable energy program span across nine administrative regions and autonomous republics. There are seven autonomous districts within these regions that are inhabited by indigenous minorities. The regional authorities in the Northern Territories proposed that MFE consider these villages for inclusion in the program based on the following selection criteria: 1) Remote off-grid location, 2) high cost of transporting fuel, 3) old age of existing power generation equipment, and 4) preliminary determination as to availability of alternative energy resources. Inclusion of indigenous minorities in the program was also heavily emphasized.

Before the breakup of the FSU, distillate fuel and gasoline were delivered to consumers by state "supply" companies, which purchased the fuel directly from the refineries. Now, the refineries and most of the "supply" companies have been privatized and new brokers have entered the fuel-supply infrastructure. Most of these "supply" companies are subsidiaries of major oil and gas production companies, which means that fuel supply and distribution are controlled by the same entities. For the full feasibility study, the nature of these "supply" companies, the regional market characteristics for fossil fuels, and the fuels pricing situation should be researched and discussed in more detail.

III. Status of Russia's Grid-Connected Power Industry

The Russian power supply system, one of the largest in the world, has approximately 180 gigawatts (GW) of generation capacity, down from its peak of approximately 212 GW in the early 1990s. Its transmission network is divided into seven regional dispatch grids and encompasses 2.5 million kilometers (km) of high-voltage lines. The post-Soviet restructuring of the electricity sector has involved the creation of regional monopolies, or "energos"—vertically integrated distribution, regional transmission, and generation enterprises. There are 72 energos charged with providing electricity (and frequently heat) to local customers. The national grid provides the means for trade between these monopolies. Generation is predominantly thermal (68%), with hydro (22%) and nuclear (10%) comprising the balance. Regionally, however, over 50% of the hydro capacity is located in Siberia and the Far East, while over 80% of the nuclear capacity is located in European Russia's northwest and central regions.

The electricity sector accounts for approximately 15% of industrial production, more than the oil and gas industries combined. Because of the drop in industrial output, the total power demand has been steadily declining in Russia since 1991. In real terms, measured gross domestic product (GDP) has fallen by 40% since 1991. However, residential demand has been rising, albeit at a slower pace. The decline in electricity production has been about 20% since 1991. In spite of this decline, because of limited transfer capability between regions, there continue to be parts of the country where the regional supply system is unable to meet demands. There are major power deficits in the following regions: the Northern Caucasus (Pyatigorsk dispatch center), North-Western region (St. Petersburg dispatch center), Ural region (Yekaterinburg dispatch center), and the Far East (Khabarovsk dispatch center).

The Russian joint-stock company for the UES controls a monopoly on high-voltage power-transmission lines and also larger thermal and hydro generation units consisting of about 20% of total generation capacity. UES also controls about 50%-60% of ownership shares of a majority of regional energos that own and operate smaller thermal and hydro generation units, regional transmission lines, and local distribution systems. However, it is likely that those energos with surplus power will opt for more autonomy in the future. Currently, 21 out of 72 energos are net exporters of electricity. Because the energos may be able to pass on the opportunity costs of generation to customers, the presence of the UES grid provides no real incentive to generate electricity efficiently. Therefore, reforming and restructuring UES and the power sector were declared high-priority items on the agenda of the Russian Government in the short term. Furthermore, the electricity sector lags behind most other sectors in terms of economic reform. Though 70% of Russian GDP is now produced in the private sector and to a large extent guided by competitive market forces, the electricity sector remains majority owned by the state as a regulated monopoly with little or no competition.

The power rates in Russia are determined by the federal and regional energy commissions. The electricity prices have been rising in real terms in recent years. However, unlike fuel prices, they lag well behind the international standards for residential rates. Increasing the residential power rates is a sensitive political issue. Because the federal government no longer subsidizes the electric rates, cross-subsidies from industry to residential consumers have become the norm. As a result, the residential rates on average are significantly (60% on average) lower than industrial rates (which in some regions are now equal to or higher than rates found in many other industrialized countries). Regional energy commissions have the authority to determine the level of cross-subsidy for each region. A similar cross-subsidy also exists for natural gas.

Exacerbating the low tariff problem for the power industry is the consumer nonpayment crisis. 50% to 70% of electricity bills have not been paid since the rates started to rise. UES is owed billions of dollars, and as a result, its ability to upgrade the deteriorating infrastructure is suffering. Fuel-supply companies are also facing payment defaults, primarily from industrial customers, which may eventually lead to loss of production capacity, thereby causing a further rise in fuel prices. Consequently, fuel efficiency and switching to lower-priced alternative fuels where feasible are critically important for Russia's power industry. Other major problems for the power sector are uneconomic dispatch and declines in operating efficiency of plants in terms of both labor productivity and fuel consumption. In this context, extending transmission lines to off-grid locations—in other words, adding new customers to the system—does not seem to be an option in the near term.

IV. Pilot Project:

1. Select a location for the study and pilot project

Verkhni-Ozerski village in the Onega District, Arkhangelsk Region, was presented by the MFE as the candidate location for the pilot project.

1.1 Establish selection criteria

Selection of the pilot location was based on the following criteria:

- Remote off-grid village
- Relatively high fuel costs
- Aging diesel system
- Availability of waste biomass in the village produced by local wood-cutting or wood-working enterprise or potential for collection of inexpensive biomass
- Interest demonstrated by the local government or power plant authorities

1.2 Evaluate the specific candidate sites against the selection criteria

1.2.1 Geographic and economic information on Arkhangelsk (Archangel) Region

The Arkhangelsk Region is situated in northern European Russia. Its coasts are washed by the cold waters of three arctic seas: White, Barents, and Karskoe (see map in Attachment 1). The region covers 589,900 sq. km, 2.7% of Russian Federation territory. Arkhangelsk constitutes about 1% of the nation's population. Forests cover 39% of the territory; agricultural land 1.3%; reindeer pastures 24.2%; islands 19%; and the rest is rivers, swamps, and lakes.

The administrative-territorial structure of the region is composed of 20 districts including the Nenets indigenous people's Autonomous District, 13 towns, 38 semi-urban settlements, and almost 4000 villages. Novaya Zemlya (New Land) Islands also make up part of the region. The Port of Arkhangelsk is the capital, where 420,000 people reside. Founded in 1584 as the first port in Russia, it was a major point of entry for Allied aid during both World Wars. Ice-breakers ensure navigation throughout the year.

The population of the region is 1.565 million and 855,300 (56%) constitute the labor force. 159,110 people are employed in industrial production. The density of the population is 2.65 inhabitants per sq. km. The majority of the population lives along the railroads and in the basins of the big rivers. The climate is severe because the location is close to arctic seas and the Arctic Ocean. Winters are cold with temperatures as low as -26°C. The regional weather is unpredictable and varied. The length of the day ranges from 3 hours 30 minutes (December 22) to 21 hours 40 minutes (June 22). The Port of Arkhangelsk's latitude is equal to that of Fairbanks, Alaska.

1.4% of Russia's forest stock is located in the Arkhangelsk Region, which produces about 8% of the wood, 7.8% of the sawed timber, 35% of the cellulose, and 11% of the paper products in Russia. The regional forests cover approximately 230,000 sq. km. In these forests approximately 1.580 billion cubic meters are old trees that have been left standing too long. The regional forest species are primarily composed of coniferous trees including fir (59.1%) and pine (26.6%). Leaf-bearing species include birch (5.9%) and aspen (0.9%).

Logging or woodcutting is operated by 58 large companies and over 500 medium and small enterprises that employ over 44,000 people. The wood processing or woodworking sector consists of 21 sawing enterprises, located mainly in the cities of Arkhangelsk, Onega, and Mezen. It employs over 25,000 people. The sawing enterprises export about one-third of their saw-timber, primarily to Europe.

Chemical processing of wood in the region is performed by Arkhangelsky, Kotlas, and Solombalsky pulp-and-paper complexes as well as by Arkhangelsk and Onega hydrolysis factories. Pulp, paper, cardboard, raw alcohol, and animal fodder are the major products.

The basic mode of transportation is railroads with total length of 1,761 km. A railroad to Moscow completed at the end of the 19th Century contributed to the region's revival as a point of trade. Auto transport carries a significant share of domestic freight and passengers. The Arkhangelsk-Moscow Highway plays an important role in the region's economy, as it provides access to the roads of Russia.

Rivers are widely used in northern Russia to carry intraregional traffic. During the warm season the river fleet transports large supplies of goods via small rivers to remote settlements which do not have permanent surface access. Marine transport is well developed and plays a major role in foreign trade as well as serving the coastal areas and arctic islands. Air transport is particularly important for remote settlements in the far north where there is no other mode of access.

There are many fishing fleets and fishing farms operating in the Arkhangelsk region, especially in coastal zones and near inland reservoirs. Other forms of coastal-marine activities are seaweed harvesting and the sea animal (Greenland seals, white whales, and sea bears) trade.

The Arkhangelsk region has limited agricultural activity. The agricultural output is mainly meat and milk production and reindeer breeding in the Nenets Autonomous District. Some potato farming is also practiced. Foot-wear, apparel, food processing, and construction are the other major industries in Arkhangelsk.

The Arkhangelsk region's power grid is independent of the Russian main grid and has 2,030 MW of installed generation capacity (1993 data) with generation broken down into thermal (1,705 MW), gas turbine (25 MW), and hydro (300 MW). The thermal power plants use about one-third coal and two-thirds mazut (residual oil) for fuel. Arkhangelsk is considered a power deficit region. Work on a planned natural gas pipeline has stopped because of lack of capital. A 300-MW gas-burning boiler is planned. Again, lack of capital and natural gas has stymied the construction of the boiler. Industrial enterprises with surplus biomass tend to make energy for their own use, although not all the available waste biomass is used for that purpose. The Port of Arkhangelsk's district-heating system supplies hot water to households only during the weekend because of the lack of and/or the high cost of fuel and insufficient rate collection. The centralized electric grid supplies power to the large industrialized centers of the Port of Arkhangelsk, Konoshna, Kotlas, Plestsk, and to some other smaller mining and industrial

processing centers. Some small industrial and mining towns have their own autonomous grids.

There are about 190 diesel power stations in off-grid locations in the Arkhangelsk region with a total installed capacity of 18.5 MW. Some of these power stations (600 to 900 kW total capacity range) are located in villages with fishing and agricultural collective farms or timber enterprises. Each village usually has two or three diesel engines with one serving as backup. Some villages are interconnected by power lines if the distance is less than 25 km. There are many smaller diesel generators that serve lighthouses, meteorological stations, and individual farms.

1.2.2 Onega District

The easiest way to travel to Onega is via railroad from the Port of Arkhangelsk. The Onega District, which includes the Port of Onega, has about 26,000 inhabitants. Six logging, two woodworking, and an acid-hydrolysis plant that manufactures alcohol and animal fodder are the major sources of employment for the district. All these enterprises are privatized with the central government maintaining a minority share. Some agriculture, such as potato and other crops, is being practiced. Winters are harsh (-20°C average). In aggregate, the industrial capacity in the Onega District is half idle because the outdated facilities do not produce competitive products. Lack of capital and modern management skills prevent rejuvenation. The town suffers from lack of heat during the winter. Apparently, the existing district-heating facility, which has six boilers, needs to be upgraded. The fuel of choice for the district-heating facility is the abundant lignin residue accumulated over the years from the acid-hydrolysis operation. However, lack of capital prevents realization of that concept. The Onega Port is practically out of commission for commercial activity because of the superior facilities offered by the Port of Arkhangelsk. The railroad connection to Arkhangelsk and the existence of the port promise rejuvenation for Onega's industry provided proper management, marketing, and investment decisions are made.

1.2.3 Verkhni-Ozerski village

Verkhni-Ozerski was the only site proposed by the Ministry of Fuel and Energy as a candidate village for biomass power. Apparently, the support offered by the Arkhangelsk Administration was instrumental to the selection. It meets the requirements for qualification according to the selection criteria listed previously. It is a remote off-grid village, it has a logging mill, and most importantly, the head of administration for the Onega District is very interested in seeing a biomass-based power plant in Verkhni-Ozerski. The current rate the residential customers pay for power is only about 2 cents/kilowatt-hour (kWh) (1996 data). The distillate fuel to generate power in Verkhni-Ozerski costs about 15–20 cents/kWh. The village logging mill and the Onega District government are subsidizing the fuel cost to residential ratepayers. The fuel-subsidy issue is discussed in further detail in other sections of this study.

The special circumstance making this village an attractive site for a pilot project is that there are four fishing villages in the proximity that also do not have access to

grid power. Because Verkhni-Ozerski is the only one of these villages with a timber industry, power generated from waste biomass fuel can be transmitted to other villages via a future transmission mini-grid. Consequently, the pilot project will address the issue of low-cost grid extension as well as power generation.

1.3 Select a location for the pilot project

As stated earlier, Verkhni-Ozerski village was presented to us by the Ministry of Fuel and Energy as the only qualified candidate for the pilot project.

1.4 Obtain data for the location under consideration

Verkhni-Ozerski (Upper Lake) is located 75 km to the north of Onega Port. A dirt logging road owned by the logging enterprise connects the village to the Onega area. While traveling on the road one sees thickly covered virgin fur, pine, and birch forests; every now and then the thick forests open up to show beautiful lakes and large marshlands. The logging village of Malazhma, located 25 km to the north of Onega, is accessed by the same logging road. Malazhma is where the grid line ends, meaning that Verkhni-Ozerski is 50 km away from the nearest grid line.

Verkhni-Ozerski's population of about 640 live in 215 apartment units. Their primary source of income is logging. The logging enterprise, Onegales, leases forest from the Onega District Administration. The village has two police officers and a school. An existing power-distribution micro-grid supplies electricity to the village. The source of electricity is a small power plant comprised of three 315-kW diesel engines. Depending on the season, one, two, or all three units are operating. A waste-biomass-fueled district-heating facility comprised of four boilers (three operating and one backup) provides hot water to the village. The hot water is critical for the seven-month-long winter season (October to April).

Besides Verkhni-Ozerski, Onegales has two additional logging operations, one in Malazhma village and the other in Onega. The primary buyer for Onegales' logging products is the lumber mill in Onega, which exports part of its lumber products to Europe. Onegales' annual sales from all three logging enterprises is about $4 million. Out of three logging locations, only Verkhni-Ozerski is off-grid, meaning that the cost of power in Verkhni-Ozerski is more than three times that of the other two locations. Assuming that one third of Onegales' annual gross revenues is from Verkhni-Ozerski, i.e. $1.3 million, it has to pay about $206,000 per year (see Appendix A) out of its gross revenues to purchase distillate fuel. Assuming it is feasible, moving Verkhni-Ozerski's operations to other grid-connected locations would save the company at least $130,000 per year in distillate fuel costs, which is about 10% of the gross revenues generated in the village. This plus village's higher transportation cost for sawed logs because of the longer truck-hauling distance are strong incentives for a privatized company like Onegales to move its operations to a location where there is higher profit (less loss) for the same effort.

2. Characterize the regional resources with respect to the pilot project

2.1 Complete a biomass resource assessment plan for the selected area

A thorough biomass resource assessment is necessary for the pilot project, which will be performed during the full-feasibility study. The village currently uses logging residue to fuel the district-heating boilers. This type of material will also be used for power generation. The tree types prevalent in the Verkhni-Ozerski area are fur, pine, and birch. The average age of the existing stock of trees in the forest is about 25 years. The amount of logging waste used in the district-heating furnaces is about 13,000 tonnes per year. According to Onegales authorities the logging mill generates much more waste than is used in the district-heating system. Furthermore, as the outlet low-pressure steam from the electric generating steam turbine will be redirected to the district-heating system, the amount of wood waste needed for district heating will be reduced. In other words, a portion of wood waste originally targeted for district heating will be redirected to power production.

2.2 Investigate local power and utilities usage, requirements, and needs

The size of a biomass energy project can be decided via two possible approaches: Internal energy need or having access to economically available biomass fuel supply for export of power or heat (in the form of steam or hot water) to outside clients. The approaches are fundamentally different and have broad implications for how the feasibility study will be conducted. The former looks internally at fulfilling an energy need and whether a biomass-fuel-based system can efficiently and competitively meet the enterprise's partial or total energy needs. The latter looks externally to an opportunity to sell energy competitively to outside clients—either grid or captive. Similar to energy efficiency projects, the feasibility of the former depends on the ability of an optimum biomass system architecture to compete against the alternative fuels—primarily fossil fuels. The feasibility of the latter is heavily influenced by whether the energy sales contracts to outside clients are creditworthy and whether the biomass fuel supply sustainability is reasonably assured.

For off-grid remote villages, where the potential for export of surplus power is very limited and present high cost of fuel and the need for its displacement is the incentive to convert to biomass, the internal energy need approach should generally be prevalent. However, even at the village level, it may sometimes be effective and feasible to export energy.

As stated earlier, the existing power plant has three 315 kW diesel engines/generators. During the five-month-long warm season (May to September) one diesel engine is normally operating at variable load. The summertime minimum load is about 100 kW or less. During the seven-month-long cold season (October to April) generally two, and for the five to ten coldest days, three diesel engines are operating. The higher demand for electricity during the cold season is due to resistance heating and also lighting as the daylight period gets very short. Although a waste-biomass-fueled district-heating facility comprised of four boilers (three operating and one backup) provides hot water to the village, village residents still need to augment the heat from hot-water radiators with resistance heating. About half of the village households are equipped with propane stoves primarily used for cooking. Obviously, the peak and base electric load demands vary from the summer to the winter.

The pilot project will consist of two phases. In the first phase, a biomass-fueled steam boiler and turbine/generator system will provide a net 470 kW of electrical power to the Verkhni-Ozerski village (base scenario). The outlet low-pressure steam from the steam turbine will be pumped into the hot-water-based district-heating system, thus reducing the need to fire the district-heating furnaces. During the summer months when the electrical demand is less than 470 kW, excess steam can be circulated in the district-heating system, totally eliminating the need for other furnaces. The alternate scenario will initially use only a 260-kW (net) system if availability of adequate capital for the base scenario proves to be a limiting factor.

An evaluation of the optimum ways for the Verkhni-Ozerski village to expand its mini-grid to the four nearby fishing villages will be evaluated as a second phase project. The villages of Purnema, Liamtsa, Una, and Luda have populations of 300, 170, 200, and 200, respectively. It is anticipated that Verkhni-Ozerski will add another 470 kW of power-generating capacity to the base 470-kW system upon completion of an optimization evaluation and successful signing of power supply agreements with each one of the four surrounding villages. The energy need of Verkhni-Ozerski and the four surrounding villages should be carefully revisited during the full feasibility study stage.

The district-heating furnaces currently use approximately 13,000 metric tonnes of wet biomass fuel per year. The logging mill authorities indicated that supplying similar amounts for power generation is not a concern. Because the proposed pilot project will be far more efficient than the existing primitive district-heating boilers, an adequate supply of fuel is not a limiting factor as long as the logging mill maintains its current level of operation. Again, biomass fuel availability should be carefully revisited in the full feasibility study stage.

2.3 Determine the power and fuel transportation resources and logistic issues

As stated earlier, an existing distribution micro-grid supplies power to village buildings. The four other nearby villages that will potentially be interconnected to the Verkhni-Ozerski waste biomass power plant also have a local micro distribution grid. The voltage requirement of the future transmission mini-grid, as recommended by the MFE, will be 10 kilovolts (kV), which is compatible with the existing transformers and switch-gears at Verkhni-Ozerski and the four villages being considered for interconnection.

Because the logging mill is situated in the Verkhni-Ozerski village, fuel-quality waste biomass to be used for power generation will be transported by conveyor belts. This method of waste biomass supply is presently being used to serve the district-heating facility.

2.4 Investigate the local labor, construction abilities, and cost

There are plenty of specialized construction workers and a technically trained work-force in the Arkhangelsk region. A power plant construction company with extensive experience in domestic and international projects operates out of the City of Arkhangelsk. This company has expressed interest in bidding on the implementation of the pilot project. The cost of local labor and construction will be determined in the full feasibility study stage

through inviting competitive bidders to specifications as provided in Attachment 5. For the time being actual local labor and construction rates suggested by the power plant construction company in Arkhangelsk have been used. Man-hours were estimated based on U.S. plants of a similar design in order to derive preliminary conclusions (see Appendices D through F).

2.5 Evaluate maintenance and repair potential

Ensuring the technical sustainability of the project requires taking the necessary steps to train the employees of the village power plant to operate, maintain, and repair the facility. Videos, multimedia, and other training tools become especially important in supporting the low-cost replication of the pilot project at other sites. Some spare parts may be manufactured locally under license agreement either in the neighboring larger cities of Onega and Arkhangelsk or in major Russian cities such as Moscow and St. Petersburg. Storing 100% of manufacturers' recommended lists of spare parts is particularly important when projects get to the replication stage. The full feasibility study will address the issues of communicating technical questions and timely responses to spare-parts stock replenishment requests. The operators and employees of the pilot project plant will participate in the training videos and will assist in supporting the replication of the pilot project at other sites.

3. Select technology options which best meet the needs of the project

The technology selections were based on the following specific project criteria:

- High reliability over extreme temperature ranges and severe operating conditions
- Commercial availability and cost-competitiveness
- Ease of manufacture and licensing for in-country manufacturing facilities
- Ease of maintenance and availability of spare parts.

3.1 Investigate available facility component technologies

Commercial biomass facility component technologies were investigated in all areas including material processing and handling, energy conversion, electric production, electric conversion, and pollution control technologies.

3.1.1 Material-processing and handling technologies

The material handling and processing equipment that best meets the selection criteria consists of live bottom bins, belt conveyors, screens, hammer hogs, and screw conveyers, which are standard in forest products industries worldwide. It has been determined that much of the equipment available in Russia will meet the stringent specifications of the U.S. industry. U.S. technologies providers in this area should be willing to license their technology and know-how to Russian suppliers and manufacturers, provided certain guarantees are met.

3.1.2 Energy conversion technology

The energy conversion technology selected was combustion using the conventional Rankine cycle. Other conversion technologies are less commercialized and are less flexible as to their application. There are many options for capable suppliers of Rankine conversion technologies in the 260 to 470 kW range required for the pilot project. Multiple qualified suppliers ensure that competitive forces will continue to keep costs low.

The efficiency of the Rankine-cycle technology is often criticized as being lower than other types of conversion technologies. The relatively low efficiency of the Rankine cycle is more than offset by its relatively low installed cost, proven reliability, safety, ease of maintenance, and general acceptance. As will be discussed later in this report, for off-grid power plants with established timber industry where the cost of the local fuel is not a concern, thermal efficiency is far less important than up-front capital cost when selecting technologies and capacities. Furthermore, as central district-heating plants are the norm in the study region, the Rankine cycle easily supports steam-heat cogeneration technology, resulting in increases in thermal efficiency, system cost-effectiveness, income, and the overall economic viability of the project.

3.1.3 Electric production technology

The electric production technology is conventional steam turbine/generating equipment where the generator is matched to turbine technology and to the Russian national 50-cycle output requirements. The generator output voltage will be designed to use Russian-built transformer and switch-gear technology.

3.1.4 Electric conversion technology

Electric conversion technologies are expected to be available from traditional sources. This technology will be best suited to meet local distribution voltage requirements at the least cost. The proposed pilot project full feasibility study should include the necessary engineering analysis to allow selection of the most economic conversion technology available to meet local and future distribution requirements. The engineering analysis will be based on present distribution factors such as load and growth projections, and on the future needs of the surrounding communities which potentially could be interconnected to form a mini-grid.

3.1.5 Pollution control technology

The pollution control technology selected for the proposed pilot project will meet World Bank requirements for solid, liquid, and gaseous discharges. In particular, cyclone technology will be used for particulate control. No control equipment will be used for NO_x and SO_x emissions. Present estimates include the costs associated with meeting present World Bank standards. The Russian pollution control requirements are not expected to exceed the World Bank standards. This information was given to us by MFE. Nevertheless, if more stringent World Bank standards are enacted in the near future, or if the Russian standards exceed those of the World Bank, then the stricter standards will be factored into the plant design and cost structure in the full feasibility study stage.

3.2 Determine the potential for local supply and fabrication

The technologies chosen for the potential pilot project are all very standard applications. In most cases, the technologies are already manufactured to acceptable quality requirements in Russia. Component designs and specifications will be issued and due diligence will be applied to assure that the proposed pilot plant will meet availability and reliability standards.

Those components of the pilot plant, such as the energy conversion technologies, which are not already fabricated locally, are expected to be fabricated under license agreements to meet the demand for future installations. The conversion technologies are well understood by local Russian suppliers and are routinely available for applications which are fueled from fossil sources. The revisions and redesigns required for biomass are not difficult from a manufacturing point of view. However, the design of these components to operate with biomass fuel at relatively small energy outputs requires an empirical knowledge that is only available from experienced small biomass fueled conversion equipment suppliers.

3.3 Investigate the potential and requirements for technology transfer

The potential to transfer the small energy conversion technologies and know-how to be used in the proposed pilot project depends on a number of factors, most importantly: The potential size of the market in Russia, local manufacturers' interest, availability of affordable credit mechanism for Russian buyers, and assurance of long-term contract protection.

3.3.1 Size of the market in Russia

The size of the market for small-biomass energy conversion technologies and small steam technologies is undetermined. All indications are that the potential market is significant. As stated earlier in this report, the Russian Northern Territories renewable energy program includes about 900 villages, of which a few hundred are expected to have plenty of waste-biomass resources. A simplistic method of determining the potential market is to multiply the costs associated with the proposed pilot project by the number of similar applications in areas of Russia that have forest industries or other sources of biomass, and which do not have access to lower-cost energy sources. Besides off-grid villages there may be many autonomous small-grid or end-of-the-grid applications that can reap cost benefit from small-biomass power as well. The resulting numbers are hundreds of potential sites and hundreds of millions of dollars. This large market does not even include the after-market service and spare-parts support.

Another way of determining the potential market size for small-biomass applications is to compare it with the U.S. market, which small biomass energy technology providers are already serving. By comparison, the U.S. market for small-biomass conversion and small turbine/generator technologies is much smaller and much more competitive than a similar market in Russia. The smaller size for the United States is because off-grid and autonomous-grid applications in the United States, with the exception of Alaska and Hawaii, are practically nonexistent. The majority of the U.S. market for small-biomass conversion systems are grid-connected enterprises that generate waste biomass as a result of their operations and produce steam and power for internal use or sale to the grid cost competitively. Enactment of the Public Utility Regulatory Policies Act (PURPA) has helped to expand the U.S. market for small-biomass systems. Despite the fact that the U.S. market is much smaller than the potential market in Russia, it is a mature market that is fully developed and productive.

The Russian market is nonexistent at this time, and must be developed as a market before it would attract U.S. small-biomass energy technology providers. A pilot project, such as the one being proposed herein, will be an important step in developing and establishing the Russian small-biomass energy market. If, and only if, the Russian small-biomass energy market potential is realized and at least partially developed, will U.S. technology providers become interested in mechanisms to transfer their technologies to the Russian marketplace.

3.3.2 Local manufacturers' interest

In order to realize the full market potential of small-biomass applications in Russia, costs should be minimized without compromising on the reliability and performance requirements of the technology. Because of the high relative cost of U.S. manufacturing as compared to that of developing or in-transition countries, and because of the prohibitive costs and delays inherent in shipping the biomass equipment to Russia, these technologies must be manufactured in Russia. The reputable Russian manufacturers of boiler equipment must recognize the potential of the small-biomass energy market and they must decide to dedicate the capacity and mobilize resources to serve this market before a successful technology transfer can occur. Thus, we are faced with the classic dichotomy of marketing. The small-biomass energy market will not be developed without low-cost, high-volume manufacturing, and low-cost high-volume manufacturing will not be developed without a small-biomass energy market.

The market and economic potential of small-biomass energy in Russia must be demonstrated before either the credible Russian manufacturers will be interested in accommodating a technology transfer of the small-biomass energy conversion and turbine/generator equipment, or U.S. suppliers will be interested in transferring the technologies. Once again, a pilot project is required to establish and verify the economic driving forces and to demonstrate the technology applicability before local manufacturers will be interested.

3.3.3 Availability of affordable credit mechanism for Russian buyers

The potential to transfer U.S. small-biomass conversion and turbine/generator technologies cannot be realized without assurance of payment in hard currency. All of the owners of these technologies are small to medium-sized companies. The small companies do not have the resources to participate in barter, technology, or manufactured-equipment trade agreements. Hard currency must be available for fees and payments to the technology providers in order to make it attractive for them to competitively offer their technologies and know-how. As the customer's ability to pay is the key concern in implementing any project in rural Russia (i.e., the economic demand is weak), special bilateral or multilateral funding programs will be needed to build the institutional capacity and offer affordable credits to screened and credit-worthy Russian buyers.

3.3.4 Assurance of long-term contract protection

The U.S. owners of small-biomass energy conversion and small turbine/generator technologies are very protective of their proprietary know-how. In most cases the technology is not even patented or patentable. Instead, it is a special know-how that was developed empirically over time and at great expense. This know-how transfer can only be compensated through contract license agreements where license fees and/or royalties are paid for each unit manufactured.

Russia has the reputation of being a difficult place to enforce contract agreements after the fact. Therefore, before U.S. providers of technologies and know-how will

cooperate in transferring this information to Russian entities, some mechanism must be established which will ensure payment of funds according to agreed-upon contract conditions over the term of the agreement. A mechanism must also be in place that protects the U.S. technology providers from competition from Russian technology recipients outside the agreed-upon territory or at any time after the contract period expires. Bilateral trade agreements or multilateral funding programs (see Sections 7.4 and 7.5) may be the proper mechanisms to obtain guarantees or risk insurance for technology transfer. This issue should be thoroughly investigated in the full feasibility study stage.

3.4 Establish the options for expansion and replication of the pilot facility

The base pilot facility will be designed for potential expansion at the initial site and for replication at other sites.

3.4.1 Base system design

The base pilot facility will be sized to comfortably serve the winter base electric load presently provided by the three diesel engine generator sets and a portion of the hot-water-heating capacity provided by the district-heating system. Each diesel engine generator set is rated at 315-kW output, bringing the maximum installed capacity to 945 kW. Two of the three diesel units are available for continuous operation during the winter and the other unit is reserved for emergency backup and peaking operation. Only one diesel unit normally operates during the summer. The hot-water-based district-heating is supplied by four waste-wood-fired furnaces, each with an estimated 4 metric tonnes per hour steam at 13 bar pressure capacity. Except for the coldest days in winter, usually only three out of four furnaces are operating.

The pilot project design will be for one biomass energy system capable of meeting a significant portion of the district-heating load and providing input steam for a small steam turbine/generator set rated to operate at 470 kW net output (base scenario). The new equipment will be designed to operate exclusively on wood-waste fuel and will use the existing diesel engine generator sets as peaking and backup units, and will also augment the existing wood-fueled district-heating system. The base system will displace 87% of distillate fuel used in the village power plant (see Appendix A).

The alternate scenario will operate at 260 kW net output and will displace 71% of distillate fuel (see Appendix A). The system will have the flexibility to be expanded in modules in the future. No capacities larger than 470 kW were considered as alternative scenarios. Although economy of scale favors a larger capacity to serve Verkhni-Ozerski together with neighboring villages, the many uncertainties associated with necessary power purchase contracts dictated limiting the scope of the pilot project to Verkhni-Ozerski at the initial stage.

3.4.2 Expansion options

The base system potentially could be expanded by adding an additional biomass-fueled boiler and steam turbine/generator system. The technology options available support this by offering modular pre-engineered systems which are designed as shippable components that can be field assembled. The balance of the system components can be purchased from Russian equipment manufactures and suppliers.

The evaluation of the expanded system revealed that it is cost effective to sell the energy to four surrounding communities at less than what it takes them to generate the energy separately. This conclusion is based on the cost of grid-line extension provided to us by MFE (see Appendix K). The expansion of the biomass-fueled power plant must be accompanied by interconnecting each of the four surrounding communities with a 10-kV line to form a mini-grid.

3.4.3 Replication options

The original design and specifications for the base system (or the 260-kW alternate scenario if it is selected) will be developed to maximize the opportunity for replication. Site-specific conditions will always require some custom-design considerations, but the basic facility design will remain constant for applications in this size range.

There are many more applications for biomass energy in the pilot plant's size range in the Arkhangelsk Region. One of the objectives of the pilot project is to replicate it many times over.

3.5 Optimize the equipment size and value relationships

The biomass-fueled conversion equipment is presently manufactured by a number of U.S. and foreign companies in discreet size increments. Information from one manufacturer is presented in Attachment 2 as a sample representing the general case. Size optimization requires analysis of future needs for increased capacity. If expansion is a certainty in the short-term (two to three years), it is usually a better value to install larger equipment to accommodate the planned expansion. However, if there is some doubt as to the further need for expansion, the modular nature of the equipment allows for relatively easy expansion.

The 470-kW electrical capacity matches Verkhni-Ozerski's winter intermediate load (is somewhat higher than winter base and summer peak loads). This capacity is believed to be able to displace 87% of the current distillate fuel consumption in Verkhni-Ozerski. More displacement will be possible if effective demand-side management (DSM) and load management are implemented simultaneously. The 470-kW size is also capable of meeting load growth, especially in industrial and new processing operations, again if adequate DSM and load management are practiced.

It is reasonable to plan for expansion of the pilot project by adding another 470 kW of biomass-fueled electric generation capacity to supply power to four nearby fishing villages

via a future mini-grid. As the proposed base 470-kW system is designed to match Verkhni-Ozerski's winter intermediate electric load, it is anticipated that the base system (one 470 kW only) will be more than adequate to handle the summer base electric load for the mini-grid. To meet the mini-grid's winter base and intermediate loads, the second-generation unit will be added if and when the demand and ability to pay for the larger project is verified. It is anticipated that the power demand from the four fishing villages will flatten the mini-grid's load curve because these villages will have high summer loads for ice making and refrigeration.

The 260-kW alternate system will essentially run at constant load throughout the year. Because of the modular design, the project size may be doubled, tripled, or quadrupled to meet additional loads in Verkhni-Ozerski and nearby villages.

3.6 Specify minimum performance criteria

The minimum performance criteria are as follows:

- A 24-hour-per-day, 7-days-per-week baseload operation
- Minimum availability of 85% per year while using the specified fuel
- Automatic operation with a minimum of operator interface
- Maximum heat rate of 20,000 Btu/kWh (21,100 kilojoules (kJ)/kWh) with specified fuel.

4. Determine the biomass supply infrastructure requirements

The required biomass supply infrastructure must be established to reliably meet the fuel requirements of the energy generation facility. Biomass has the advantage of being a waste by-product of the indigenous industries in the pilot project region. Therefore, fuel delivery and sustainability issues are less important and pollution, environmental, and optimum system design issues are more important.

4.1 Determine the need for independent supply channels

Multiple, independent supply channels normally generate price competition and guarantee fuel supply sustainability of biomass energy projects. Because the pilot project site already has four biomass-fueled hot water boilers, and because the amount of biomass required for the pilot project will be very similar as to what is currently being provided for the district-heating system, it will not be necessary to establish independent fuel-supply channels.

Additionally, the biomass fuel is derived from the waste by-product stream of the village logging operations. Because the people in the town are employed either directly or indirectly by the logging operations, and because economic survival of Onegales depends on continued operation of the biomass plant, there is no need to look at alternative sources of biomass fuel to supply the energy needs of the village.

4.2 Establish a fair pricing system for biomass fuel supply

As Onegales is the anticipated owner and operator of the proposed biomass-to-energy facility, many biomass fuel-supply cost components will be borne by the existing infrastructure, thus reducing the marginal cost of the fuel supply drastically (see Appendix B). However, if an independent entity is established by Onegales to raise equity capital and serve the energy needs of the pilot project, then that entity should have a predetermined operating budget which accounts for the full costs and income inherent in the operation of the energy facility. Thus, the entity should contract Onegales and pay for the processing and delivery of adequate amounts of the waste biomass fuel. The price paid should be derived based on cost of processing to meet the requirements of the fuel specification, plus the cost to transport the waste biomass to the delivery point, and should deduct the alternative cost of disposal. The accounting methodology must be on an energy value basis as delivered to specification. It is also likely that Onegales will simply allocate a portion of its overhead expenses to the power entity's budget and avoid cumbersome accounting practices.

4.3 Provide for controls for biomass access to meet sustainability issues

Because the amount of waste biomass available from the present forest operations exceeds the fuel needs of the pilot project, there is no need to exert additional controls to limit biomass fuel supply. However, future expansion may require biomass fuel to absorb the present oversupply of biomass. If this is the case, the cost of getting sufficient specified waste biomass fuel must be increased to encourage collection of additional sources of waste biomass such as the slash left behind from forest-harvesting operations.

If the demand for fuel continues to grow, then there is an automatic limit on the amount of waste biomass that will be made available for fuel purposes. The price that can be paid for fuel-quality biomass will automatically limit the supply to the waste-biomass material derived as a by-product of local forest and agricultural operations. If the cost of biomass fuel rises far enough, then alternative sources of energy production will be used. Because the cost of alternative fuels is far below the cost of cutting and processing standing biomass, there is no possible economic incentive to harvest living biomass for fuel purposes. In any event, forest management practices should be discussed in the full feasibility stage.

4.4 Prepare fuel specifications to meet equipment constraints

The selected biomass-fueled energy conversion technology has the following very specific "as fired" biomass fuel specifications:

- Fuel moisture must be greater than 20% and less than 55% by weight.
- Maximum fuel size must be less than 4 inches (10 centimeters [cm]) in any direction.
- A minimum of 80% of the fuel must be less than 2 inches (5 cm) in any direction.
- A maximum of 25% of the fuel can be less than 0.25 inches (6 millimeters [mm]) in all directions.
- Fuel ash and noncombustible content must be less than 2.5% by weight.
- Minimum fuel higher heating value must be greater than 3,800 Btu/lb (8,850 kJ/ kilogram[kg]).

5. Establish the power production costs with respect to alternatives

The costs of power production identified herein are budgetary values based on estimates and budget quotations. The budget values are further modified to address site-specific conditions and constraints including shipping, fees, and duties at the job site. Alternative values are based on actual data obtained from local officials when known, and reasonable assumed values when the data is unknown. All assumed values are indicated.

5.1 Provide project pro forma based on project values

The pilot project cost components are as set forth in Appendices B through G. The project values for the cost of the specified waste biomass fuel, for operation and maintenance, cost of labor, cost of construction, and cost of development and financing are addressed below. The discounted cash-flow analysis was constructed to allow for financing, equity, and construction cost payback by the recipients of the electrical power and heat energy. When the costs are compared with the status quo costs as set forth in Appendix J, it can be seen that considerable savings will be realized by the proposed pilot project under both 470- and 260-kW scenarios. The project financial internal rate of return calculations and pro forma analysis are shown in Appendix J.

5.1.1 Cost of waste biomass fuel

The project waste-biomass fuel cost estimate is given in Appendix B. The waste-biomass fuel is a disposal problem for the logging operations where it will be accessed. It is reasonable to assume that the quantities needed for the pilot project operations would be provided at no cost if desired. However, based on the premise "that which has no value is valueless," the cost of processing and transporting fuel-quality waste biomass was used. The resulting cost of fuel was calculated to be $0.00347 per kilowatt-hour. This leads to annual cost of waste-biomass fuel of $6,139 and $5,012 for the 470 kW and 260 kW scenarios, respectively.

5.1.2 Cost of operation and maintenance

Operation and maintenance (O&M) as it is defined here does not include labor but does include the parameters set forth in Appendices C and D. The resulting calculated costs of O&M, including peaking and backup operation of the existing diesel engine generators (sum of O&M values in Appendices C and D), are $37,498 and $41,940 per year for the 470-kW and 260-kW scenarios, respectively.

5.1.3 Cost of labor

The assumptions used to estimate the cost of labor required to operate the proposed pilot power and district-heating plant are set forth in Appendix E. Labor costs are assumed rather conservatively to remain unchanged (for the 470-kW scenario). Specific quotes from Onegales management also helped to reach this conclusion. The same assumption was also used for the 260-kW scenario, but not as conservatively. Better labor-rate estimates and analyses should be used in

future stages of the feasibility study. It was further assumed that the present energy production labor force can be trained to operate the new equipment, and that the old equipment would be used for standby, peaking, and emergency backup operations.

5.1.4 Cost of construction

The engineering, procurement, and construction (EPC) cost estimates are given in Appendix F. Budget costs estimates were solicited from appropriate vendors and equipment suppliers. Construction was estimated based on man-hours required in the United States for a similar scope of supply and modified for Russian labor rates and productivity. Engineering, design, start-up, and training costs assume U.S.-qualified engineers. Cost savings from modular, multiunit, and construction with maximum local content are also shown in Appendix F.

5.1.5 Costs of development and financing

Appendix G provides the parameters for estimating the development and financing costs. The estimates are based on all feasibility study work being performed under a grant. It would be unrealistic to assign these one-time costs to the economic evaluation of the proposed pilot project, because project development costs are part of the multiunit capacity building process.

5.2 Compare with alternatives presently being used

The present situation relies heavily on fossil fuel for electrical generation. The status quo cost as set forth in Appendix A, plus the costs associated with the diesel system O&M and equipment replacement, are considerably higher than the cost to own and operate the proposed pilot plant (see Appendices H and J). If projects are built using modular technology, volume-purchase discounts, standardized project evaluations, more local components, and improvements that take advantage of the learning curve, then total costs for additional similar plants would be reduced. The costs, then, should be lowered in all areas of feasibility analysis, financing, construction, engineering, and design. Indeed, overall cost reductions between 30% and 40% are possible. For off-grid communities where the timber industry exists, this could make small-biomass applications the lowest-cost alternative for heat and power in the region and possibly throughout the entire rural infrastructure of Russia.

6. Investigate ownership and operation scenarios

To determine the economic sustainability of the project, the owners and beneficiaries must be identified. The cooperation of these parties is important to the success of the project.

6.1 Determine the present local power ownership, operation, beneficiaries, and ability to pay

The village power plant is owned and operated by the privatized logging enterprise, Onegales Joint Stock Company. Onegales owns three logging enterprises (one in Verkhni-Ozerski village, one in Malazhma village, and one in Onega). Malazhma is 25 km to the north of Onega and 50 km to the south of Verkhni-Ozerski, and is where the grid line ends. Some investors from St. Petersburg, employees, and the Russian federal government are the shareholders of the company.

Besides Onegales, the Onega District Administration and the federal government are beneficiaries of the project. Regional power commissions in Russia set the energy tariff rates. In the case of grid-connected ratepayers, the federal government no longer subsidizes energy rates. The regional energos such as Arkhenergo attempt to recover their expenses through cross-subsidization of energy rates from industrial to residential ratepayers. In case of the off-grid village of Verkhni-Ozerski, the tariff village residents paid for electricity in early September 1996 was 110 Rubles/kWh ($1=5,500 Rubles). This is equivalent to 2 cents/kWh. The institutional and commercial facilities—clubs, kindergartens, schools, and shops—paid 400 Rubles/kWh (approximately 7.2 cents/kWh). The tariffs set by the regional commission for small and large enterprises are 145 Rubles/kWh (2.6 cents/kWh) and 340 Rubles/kWh (6.2 cents/kWh), respectively. The tariff for district-heating steam sold to village residents is 190,000 Rubles/Gcal ($34.55/Gcal). According to the Onega District Administrator, the benchmark cost of produced electricity for Onegales used for subsidy calculation is 700 Rubles/kWh (12.7 cents/kWh). This number is primarily influenced by the purchase price of distillate fuel. Onega District Administration is mandated by law to subsidize the difference between 12.7 cents/kWh and the actual 2 cents/kWh residential rate set by the Regional Power Commission and paid by the customers.

The Russian federal government subsidizes the transportation component of fuel cost to some remote locations in the Northern Territories. Subsidies are forwarded to regional energy funds under regional administrations to disperse to remote communities according to historical fuel usage. Only the fuel used to heat and power municipally owned residential housing is subsidized. It seems that the residential housing in Verkhni-Ozerski is owned by the village industrial enterprise, and that is the reason why the central government does not subsidize the fuel transportation cost to the village. As a result, according to the head of Onega District Administration, since 1993 the federal and regional governments are no longer helping the Onega District in any form of energy subsidy while the fuel costs have been rising drastically in real terms. This federal fuel subsidy is a target for significant reductions in upcoming years because of the shortage of funds.

Onega District has lost its tax base in recent years because of recession and is unable to meet its subsidy obligations. Therefore, the District Administration is piling up arrears to Onegales and similar enterprises. As of September 1996, the District debt to enterprises

was more than $4 million. Consequently, Onegales decided to respond by withholding its tax payments to the District, which is responsible for collecting taxes for the federal and regional governments as well. This caused the federal tax agents to place a lean on Onegales' bank account, stopping all but payroll disbursements. From this it is obvious that the Onega District Administration and the federal government are both beneficiaries of the project. The project will help the District to unload a subsidy burden in Verkhni-Ozerski and the federal government will experiment with a practical solution to the fuel subsidy burden of the Northern Territories.

Like any other single-enterprise community, Verkhni-Ozerski has depended on the logging mill in the past to provide housing, schools, community club, district heating, electricity, and other infrastructure needs and social services. The primary users/beneficiaries of the project, i.e., village residents, are content with the low tariff they are paying and would not be motivated to see a change in the status quo, though they must be very interested in the financial welfare of their employer.

Onegales is the logical owner/operator of the biomass energy project because it has the financial capability and experience to be the obligor and operator of the plant. The Onega District Administration does not qualify to be the owner/operator of the plant because it is essentially bankrupt and does not have the expertise to run similar facilities.

The listed daily wages in Verkhni-Ozerski vary from 5,440 Rubles, or $1 (semi-skilled workers such as wood delivery and ash-disposal personnel) to 8,720 Rubles, or $1.59 (welder and machinist). Actual salaries are three times as high and include bonuses for the Northern Territories and taxes. The daily wage for skilled power plant construction workers in the Port of Arkhangelsk is about $16 to $25.

The ability to pay for biomass energy equipment in Verkhni-Ozerski is closely intertwined with the economic and financial health of the enterprise. This is because the actual power cost per household is comparable to a single wage earner's income, meaning that village ratepayers cannot afford it. In other words, Onegales either has to raise the wages of its employees for them to afford the actual cost of power—an impractical option because power rates are set by the regional energy commission—or it has to continue carrying the subsidy burden. Appendix J shows that Onegales can generate a significant net cash flow out of the biomass system, leading to the conclusion that Onegales should welcome biomass as an affordable cost-saving strategy.

6.2 Consider a model for private cooperative ownership and operation

For villages such as Verkhni-Ozerski that have an established, privatized timber operation, the enterprise itself is expected to own the power plant because it is the major user of the power and village residential customers are its employees. Besides ownership by private individuals or entities, the enterprise's employees and the federal government are also shareholders of Onegales. So a form of power plant cooperative ownership already exists at the village.

There are many off-grid villages in Russia where the village farming, fishing, or other major economic activity is still owned by the collective farm (kolkhos). As the major business entity in these villages, the kolkhos is expected to own and operate the power

plant. The regional power and district-heating utility Arkhenergo may be interested in investing in off-grid village power plants provided the projects' rate of return is attractive and competitive with the return possible through extension of the present grid. It is reasonable to expect that Arkhenergo would prefer that international financing be used for the routine extension of grid lines rather than for the unfamiliar stand-alone renewable energy systems. But this preference may be overcome if a better rate of return can be shown to result from proven renewable energy applications.

6.3 Estimate the potential for large private ownership

Arkhenergo or any other large investor can only be interested in investing in village stand-alone renewable energy projects if a number of projects are bundled together and the collective rate of return is more attractive than grid extension. Besides Arkhenergo, there may be other investors in the region, such as large industrial enterprises, that would be willing to invest as minority owners in bundled projects. During the financing phase of the pilot project, provided there is need for additional equity capital, potential investors will be approached for minority-level participation in the project equity.

6.4 Evaluate possibilities for establishing hybrid ownership and operation

Because the federal government is a shareholder in Onegales, its ownership is a hybrid of public and private concerns. The Onega District Administration is a major beneficiary because its subsidy burden will be substantially reduced or eliminated by the project. Consequently, its participation in the ownership of the project has some merit. Because Onega District is practically bankrupt due to its inability to meet subsidy obligations, its ownership of the project is out of the question. Federal, regional, and district governments, as direct or indirect beneficiaries of the project, are expected to participate in the pilot plant and subsequent larger efforts through grants, tax and import duty exemptions, low-interest subordinated debt financing, and generally by creating the proper environment for the project to move forward. Onegales, as the local champion of the project, is the reasonable owner and obligor for the waste-biomass-to-energy project and is expected to generate support within the local and regional governments for the project to proceed.

7. Determine the feasibility and costs of local manufacturing and construction

One of the advantages of using small-biomass-energy technology is that it uses well-known and understood equipment. All of the systems and components, from the material handling to the energy conversion and from the water inlet to power generation, have been used in other capacities for many years. As a result, none of the specified equipment required to meet operational and reliability objectives will pose a problem for local manufacturing and construction. In fact, the simplicity of the equipment presents another problem. It can be readily copied by fabricators and suppliers wishing to bypass proprietary rights and agreements. The methodologies recommended to prevent unauthorized copying of the technology are addressed in Sections 7.4 and 7.5.

7.1 Establish financial strength and reliability of local suppliers and builders

Suppliers of small-biomass combustion equipment in Russia have been supplying technology that is designed for low-grade district-heating purposes. As such, the technology is primitive and unsuitable for electric generation. However, these same suppliers could easily manufacture U.S.-designed combustion systems. The balance of the components of the proposed pilot plant could come from equipment already manufactured in Russia, the newly independent states, Europe or just about anywhere in the world. However, only a qualified engineer would have the ability to specify the appropriate equipment for each site-specific application and provide the quality assurance required to meet reliability standards for electric generation.

We identified a Russian company that could be one of the qualified candidates to install the proposed biomass-to-energy equipment. The Northwest Energy Assembly located in the City of Arkhangelsk has considerable international experience in constructing energy plants. That company was contracted by the Onega Acid Hydrolysis plant to construct a lignin-fueled biomass power plant that would generate approximately 10 MW of energy. The project has been stymied due to lack of capital. Northwest Energy Assembly has expressed interest in bidding on the installation of the biomass energy system in Verkhni-Ozerski. Northwest Energy Assembly is one of many contractors that would be qualified to take full responsibility for the installation and initial operation of the small-biomass-energy project. Logically, the work will be competitively bid at the appropriate time.

The workers at the Verkhni-Ozerski village already operate and maintain the wood-handling and combustion equipment that supplies the district heating for the village. In addition, they operate and maintain the electric generation and distribution system serving the village. They also do a significant portion of the village's construction and installation work. The same workers would be capable of supplying a significant portion (perhaps as much as 80%) of the construction labor for the small-biomass pilot project. Because the remote villages in the Russian Northern Territories must be largely self-sufficient, it is expected that the majority of the villages could provide a similar portion of the construction labor with appropriate supervision from experienced suppliers and engineers.

7.2 Obtain budget estimates from interested and experienced local and nonlocal suppliers and builders

The estimates used in this phase of the pre-feasibility study were obtained from a number of experienced local sources and U.S. suppliers of similar equipment. One of the U.S.

suppliers has provided a similar 600-kW (thermal) small-biomass-to-steam energy system to a site in Romania. The estimates from the local suppliers included man-hour cost rates for various types of skilled labor. These estimates were obtained for the Verkhni-Ozerski village labor from Onegales, the joint stock company which owns the present Verkhni-Ozerski energy system, and the contractors supplying labor for similar construction. Equipment costs include both locally supplied and U.S.-provided equipment.

Because detailed specifications are not available for locally supplied equipment, much of the major biomass system's equipment components were estimated based on U.S. sources of supply. Most, if not all, of the U.S. equipment will be more competitively sourced from suppliers in Russia or nearby countries. The boiler equipment may be the only component that must be delivered from the United States. Therefore, the estimated costs used for this study are conservative.

7.3 Establish volume discounts for multiple projects

The actual value of large-volume discounts has not been determined at this early stage though a multiunit savings estimate is offered in Appendix F. However, this savings estimate is not accounted for in the rate-of-return calculations in Appendix J. All prospective vendors that were contacted were open and willing to provide volume discounts should there be a need. All volume discounts were contingent on multiple orders being placed and not on contingent or future discount pricing. The U.S. boiler suppliers were also interested in licensing their technology to Russian manufacturers provided the proper license protection and reassurances could be guaranteed. Even without volume discounts, subsequent projects of a similar type will result in lower incremental costs as all parties participate in and benefit from the learning process.

7.4 Evaluate the technology-transfer issues and potential for joint ventures

The issues surrounding the transfer of small-biomass boiler technology have been addressed many times in different countries. Because Russia does not have a good track record for protection of proprietary technology and there is no defined mechanism for resolving disputes in this area, U.S. suppliers will be very reluctant to transfer any technology to Russian suppliers. However, if a mechanism can be put in place that would protect the U.S. suppliers' goods and services, they have a history of establishing joint-venture agreements with local manufacturers, fabricators, and service providers.

The nature of the projects that may be forthcoming, provided the proposed pilot project proves that small off-grid biomass power is sustainable and can meet economic projections, is such that the lending mechanism can support protection of proprietary rights. Because future projects will be structured through a dedicated multilateral and/or bilateral financing program designed to assure consistent and predictable performance of the selected applications, it is not out of the question that license, representation, and know-how transfer agreements and payments could be administered under the same structure.

For instance, if a U.S. supplier would license a Russian supplier to provide small boiler equipment in response to an established funding program, then the program could include criteria which would only accept certain preapproved and established equipment. If a

license or other acceptable fee agreement was in place between a U.S. and Russian supplier, the fees could be paid directly to the U.S. technology provider according to the terms of the agreement. This type of agreement would provide assurance that the appropriate fee payments were made in a timely fashion in acceptable currency, as well as a disincentive for the supplier to use the technology in an unauthorized manner, at least until the program had run its course.

7.5 Investigate laws protecting proprietary rights and obligations

On paper, Russian laws provide all sorts of guarantees to foreign investors and technology providers. It is the Russian legal system that has been unwilling or unable to enforce the laws. One way to remedy that problem is to refer to third-country impartial arbitration mechanisms. Again, the outcome of the third-party arbitration may not be enforceable in Russia. Instead of going to court, foreign suppliers of goods and services normally would refuse doing business with any Russian entity that does not perform according to the original terms of the agreement. The transaction loss is treated as a normal cost of business in Russia and recovered through future transactions. However, in technology-transfer situations where there is no future transaction after the completion of the technology transfer the nonperformance loss cannot be recovered.

In the absence of an enforceable legal system, only bilateral or multilateral agreements backing know-how transfer contracts can give the suppliers of technology the necessary assurance to sell their know-how to the Russian entities. A separate methodology using multilateral or bilateral financing programs to protect license fees was discussed in Section 7.4. The issue of protecting technology-transfer rights should be researched and presented in more detail in the full feasibility study stage.

8. Compare the projected cost for biomass to energy with alternatives

8.1 Investigate only commercially ready systems that are proven performers

There are many biomass energy production alternatives available. Only those options that have been commercially proven in international applications were considered for this project. Any demonstration/pilot project of this kind is going to face many technical, reliability, economic, financing, and other sustainability challenges. The more constraints/challenges that can be addressed with successful and proven technology and/or methodologies, the greater the opportunity for success of the demonstration project. This approach is also necessary to meet most international financing criteria.

As stated earlier in this report, the energy conversion technology selected was combustion using the conventional Rankine cycle. Other conversion technologies are less commercialized and are less flexible as to their application. There are many options for capable suppliers of Rankine conversion technologies in the 470-kW range required for the pilot project. Multiple qualified suppliers ensure that competitive forces will continue to keep costs low. Those components of the pilot plant, such as the energy conversion technologies, which are not already fabricated locally, are expected to be fabricated under license agreements to meet the demand for future installations. The conversion technologies are well understood by local Russian suppliers and are routinely available for applications that are fueled from fossil sources. The revisions and redesigns required for biomass are not difficult from a manufacturing point of view. However, the design of these components to operate with biomass fuel at relatively small energy outputs requires an empirical knowledge that is only available from experienced small-biomass-fueled conversion equipment suppliers. There are many such suppliers available in United States and elsewhere.

As stated earlier, the efficiency of the Rankine-cycle technology is often criticized as being lower than that of other types of conversion technologies. The relatively low efficiency of the Rankine cycle is more than offset by its relatively low installed cost, proven reliability, safety, ease of maintenance and general acceptance. Furthermore, biomass fuel efficiency in Verkhni-Ozerski because of its low cost is not an issue. Moreover, central-heating plants are the norm in the study region. The Rankine cycle easily supports steam-heat cogeneration technology and the resulting increase in thermal efficiency, cost-effectiveness, and income increases the economic viability of the pilot project application.

Biomass power gasifiers were not selected for the pilot project because at present only a few commercial small-scale units are operating globally. The majority of these units—rice-husk gasifiers are located mostly in China and India. A declining number of charcoal gasifiers continue to operate in Latin America. A few wood-fueled power gasifiers are in commercial operation in Latin America as well. The largest unit, about 1 MW_e, was installed in Paraguay. Currently, the short-term commercial prospects of small-scale biomass power gasifiers appear limited; improvements in the commercial track record, reliability of equipment, and economics are necessary before gasification technologies can be considered for reliable baseload electric applications.

8.2 Include other renewable energy technologies such as wind

Verkhni-Ozerski village is not expected to have significant renewable energy potential other than waste biomass. There are some villages in the coastal areas of the Arkhangelsk Region that have good wind resources. It is not known whether any of those villages has abundant biomass resources as well. If such a situation indeed exists, then one needs to compare the economics of using wind or biomass resources alone or in combination. The complicating factor for a combined biomass/wind system is that the replicability component will vary from site to site more than it would for separate biomass or wind systems. In other words, use of standardized and simplified low-cost project evaluation methods and equipment will be somewhat more difficult. However, if the total number of villages in the Russian Northern Territories that have abundant biomass and wind resources is large, low-cost replication would not be a problem.

Small hydroelectric power is expected to be the renewable energy resource of choice in some parts of Siberia despite the extreme weather conditions. Small geothermal power is likely to be available in the Russian Far East. Solar thermal and photovoltaic (PV) are generally not expected to be good candidates because of the extreme northern location of the potential projects. Nonetheless, prohibitive fossil-fuel costs and lack of any other renewable energy option may prove solar energy economically feasible in certain locations in the Russian Northern Territories.

Demand-side energy efficiency measures such as increased insulation, use of fluorescent lightbulbs, weatherstripping and others are expected to be cost effective in those villages that do not have adequate, inexpensive local renewable energy resources. However, subsidized tariffs discourage demand-side energy efficiency implementation. If the project scope expands to supplying power to a mini-grid and the expense of collecting local waste biomass resource exceeds the cost-effective threshold value, then all villages served by the mini-grid will be examined for energy efficiency opportunities.

The biomass conversion technology recommended here is suited particularly for baseload electric operations. In order to minimize expensive fossil-fuel usage during peak demand, and also to reduce the initial biomass system capital cost, aggressive load management and DSM techniques will be investigated and provided in the project design phase. Demand-side energy efficiency measures may prove to be the most cost-effective DSM strategies for Verkhni-Ozerski. If so, future phases of the project evaluation should also consider the application of these opportunities.

The cold climate, short growing season, and small scale mean that most biofuel options are less attractive than the proposed project relies solely on forest products industry residues. Regional biofuel centers may be feasible in the future when capital is more available and the transportation infrastructure is more developed.

8.3 Assess prospects for distillate fuel, natural gas, and coal as competitive fuel sources

Distillate fuels are not likely to be competitive with biomass fuel in the near future. The cost of distillate fuels and its drain on the regional economies are why this study is necessary. To be competitive with biomass energy in Verkhni-Ozerski, the delivered cost of distillate fuels would have to decline to about half of the present cost. Common sense

indicates that sharp decreases in distillate fuel costs are unlikely to occur. Even if oil reserves were discovered in the region, it would take a long time before the infrastructure was put into place to produce significant quantities of distillate fuel. In addition, world oil prices are likely to be such that it would be better for the regional economies to export oil and its distillates, rather that to consume them domestically.

Natural gas is already available in Russia. However, the huge capital cost required to build the delivery infrastructure to the Arkhangelsk Region and then to remote villages makes it infeasible to expect low-cost natural gas for the foreseeable future. The Arkhangelsk Region suffers from a shortage of power. In addition, lack of capital has stymied the construction of a natural gas pipeline to the region and a proposed 300-MW fossil-fueled power plant. As a consequence, extension of the power grid to remote villages will not be accomplished in the foreseeable future.

Coal is available in Russia and is being transported via rail to the Arkhangelsk port for industrial and power plant uses. Unless coal is available locally, transport of coal via trucks to remote villages would be even more expensive than distillate fuel. For some off-grid locations (except during the winter when surfaces are iced), there are no access roads to transport the coal. Small-scale coal and peat are generally not competitive with waste biomass because of high parasitic load and air-emissions-control costs.

8.4 Compare with future commercial alternatives

It is difficult to evaluate which of the emerging power production technologies will be commercially available in the near future. It is safe to assume that change will occur that will affect the technology selections for replicable projects in this region. The best way to assure that the best technologies will be considered now and in the future is to use competitive-bid and open-procurement practices. Thus, the ongoing activities will be structured under protocols established to encourage competitive bidding and improvement in technology alternatives based on established return on investment and acceptable risk criteria.

8.5 Consider feasibility of interconnecting one or more centralized biomass-to-energy facilities to other villages via mini-grids

The prospect of providing a mini-grid to other villages in the area is very appealing from the standpoint of improving the potential return of the initial capital cost of the biomass-to-energy system or, more importantly, reducing the delivered cost of the electrical energy. The incremental cost of doubling the nominal 470-kW biomass capacity to 940-kW is approximately 40% of the initial capacity if the extra capacity is installed at the same time as one single unit. However, this scenario is not evaluated at this stage due to many practical uncertainties associated with the sale of power to surrounding villages. If the additional capacity is installed later on as a planned Phase 2 program, the incremental cost would be approximately 80% of the original capacity provided the expansion is modular. These cost figures do not take into account the cost of the grid extension. A distinct advantage of the two-phase modular expansion is the enhanced redundancy and, thus, reliability of the system, leading to a higher distillate-fuel-displacement ratio. Another option is to install two modular 470-kW units simultaneously (single phase) to serve the expanded mini-grid.

The grid extension costs required to connect four additional villages to the Verkhni-Ozerski distribution system are shown in Appendix K for the two-unit single-phase and two-unit two-phase scenarios. When extension of the grid to the four nearby villages is included with the cost of the 470 kW of future additional capacity, the cost to generate biomass-fueled power is lower than the present diesel-based power generation at each village. As stated earlier, the lower-cost alternative is to install the additional capacity as a two-unit (470 kW each) single-phase system and extend the grid as part of the initial project. However, the proposed pilot project is designed to be a model for other applications and the pilot project is designed to provide a mechanism to determine infrastructure requirements and constraints. Therefore, it is more conservative to plan the grid extension as a Phase 2 initiative contingent on the demonstrated success of Phase 1.

9. Determine the feasibility and cost of expansion and replication of the pilot system

The costs of studying the feasibility and cost of expansion of the proposed pilot project to other similar applications will obviously be less than the costs of actually implementing and evaluating the performance of the pilot project. The final incremental cost determination will be specific for each site based on factors such as size of equipment needed, existing infrastructure, weather, water availability, land characteristics, access and distance from supply sources, and many other factors. Yet considerable effort was made to select a site for the proposed pilot project that would represent "typical" applications (for biomass resource availability versus the high cost of fossil fuel in a remote off-grid village) in the Russian Northern Territories. However, the cost of transporting distillate fuel to Verkhni-Ozerski is somewhat less than typical, meaning that fossil-fuel-displacement cost saving and thus, rate of return for installed biomass conversion equipment, will also be less than typical. As a consequence, Verkhni-Ozerski is an ideal site to use in order to prove the concept.

Assuming that the proposed Verkhni-Ozerski pilot project is typical for the region, it can be expected that each subsequent project of the same size will cost essentially the same amount in real dollars. This assumption conservatively ignores the potential cost reductions from volume discounts and learning-curve improvements. If the size is smaller, the real cost per installed net generating capacity will increase according to the constraints of the available equipment sizes and the amount of the labor component. The size range for systems of the type recommended for the proposed pilot project is from approximately 80 to 2,000 kW. Estimated costs for the labor and hardware to install the two systems (260 and 470 kW) are included in Appendices E and F.

9.1 Prioritize on-site expansion of up to 100%

The expansion of the on-site capacity must be a top priority once the objectives of the Verkhni-Ozerski pilot project are met. If the circumstances were such that the pilot project (i.e., proof of concept) were not required, the optimum installation would include the mini-grid to the four nearby villages and a 940-kW biomass-fueled capacity. Plans and contingencies for a Phase 2 expansion of the project should be part of the pilot project requirements.

9.2 Address the cost, logistics, and technical impacts of using the selected technology at other sites

This type of technology is designed to be the least-cost life-cycle option while meeting the requirements of high reliability and forgiving operation and maintenance adaptable to the skill level of local labor. Because the fuel is very-low-cost waste biomass, the efficiency of the electrical generation cannot be an important design constraint. This design strategy lends itself to the sustainability of the project and eases the process of applying the technology to other sites. It also facilitates using low-cost local labor and replacement parts as opposed to importing high-cost technical expertise and equipment.

Once the pilot project becomes operational, the technology used will be easily understood and more readily accepted by other potential users. This type of technology lends itself to modularization, which further simplifies the preliminary engineering and return-on-investment determinations. Thus, the initial soft and hard costs of applying the recommended technology to other sites can be reduced—i.e., the return on investment can be increased—without compromising the reliability of the technology and system. If the

application of the pilot plant technology can be standardized and evaluations programmed to meet the explicit reliability and risk-toleration constraints of the funding mechanisms, then the costs can be further reduced, making the application of the technology even more appealing.

9.3 Consider the trade-offs of using modular component technologies versus field-assembled systems

As stated previously, this type and size of electrical generation systems lends itself to modularization. The incremental sizes are such that there is little need for the custom sizing. Thus, the designs can be largely pre-engineered and assembled under tightly controlled conditions. This will improve the overall quality and reliability of the equipment while minimizing the cost and vagaries of field construction and assembly. Modular systems also lead to economies of scale if multiple units are ordered as part of a large multi-site program.

9.4 Determine the estimated incremental costs per installed kilowatt for the pilot project and other regions under consideration

The hard cost estimates for 260 and 470 kW sizes are presented in Appendix F. The lower-capacity scenario (260 kW) suffers from reduced economies of scale. However, its competitiveness is bolstered by disproportionately higher distillate-fuel displacement resulting from maximum load operation in summer. As a result, the financial internal rate of return for both capacities is practically the same (see Appendix J).

The costs for the proposed Verkhni-Ozerski pilot project for either scenario are higher because of the pioneering nature of the venture. The Verkhni-Ozerski project cannot use domestic manufacturing and must bear the expense of imported materials. Labor costs are also higher because U.S. construction supervision and start-up services are included. However, costs could be significantly reduced or eliminated if a license is negotiated between a U.S. supplier and a qualified local counterpart. Subsequent projects are also expected to benefit from cost reductions because of volume discounts from multiple orders and increased productivity resulting from lessons learned from the pilot project. Also, the efficiency of manufacturing, assembly, and supply of modular components and preassembled units will improve as each round of the multiunit project is completed.

10. Determine the environmental impacts

The relative environmental impacts of the application of waste biomass power generation will occur in the areas of solid, liquid, and gaseous discharges. The current method of power generation is with diesel generators that use number 2 distillate fuel oil. For the pilot project, the village is heated by very primitive, low-efficiency, waste-wood-fired hot-water boilers.

The proposed waste-biomass-fueled cogeneration plant will operate at higher efficiencies than either of the existing energy generation systems, thus reducing the amount of emissions per unit of energy production. In addition, the emissions currently produced by the combustion of diesel fuel will be replaced by relatively clean waste-biomass-fueled emissions. In the absence of actual air-emissions data for Russian-made diesel equipment, emissions comparisons between a U.S.-made 315-kW biomass and diesel systems are shown in Appendix I.

10.1 Investigate the environmental trade-offs, including ash-disposal problems

The project will reduce environmental impacts in two ways. One is by replacing the current diesel-fueled power production. The other is by using additional waste biomass, which would otherwise be left to decompose in the environment, as a fuel source.

Provided this project is completed, the existing diesel-fueled engines and generators would no longer be run except for winter peaking and emergency backup. This means that the carbon dioxide (CO_2), oxides of nitrogen (NO_x), sulfur oxides (SO_x), hydrocarbons, particulates, and other emissions produced by the diesel engine would no longer enter the environment. The reductions in emissions for a 315-kW system are calculated in Appendix I.

There is a significant amount of literature that addresses the pollutants produced from decomposing biomass. In all cases, varying proportions of methane, other hydrocarbons, and carbon dioxide are emitted during the decomposition process. Because these figures are difficult to predict and there is no empirical knowledge for the region surrounding the proposed site, we can assume that the combustion of biomass is no worse than natural decomposition. This is a very conservative and easily defensible stance. If appropriate empirical data is available in the future, then the reduction of emissions produced from the combustion of waste biomass versus decomposition will be evaluated. The carbon dioxide and other greenhouse gases produced by the existing diesel generators will be almost totally eliminated. The calculated reductions for one 315-kW engine are presented in Appendix I.

Liquid discharges from biomass power production include boiler blowdown, cooling-water overflow, and water drainage from the plant site. Assuming that some storage of biomass will be necessary, the runoff from this storage pile will have some environmental impact. The storage pile runoff will not be any more significant than similar discharges produced under natural decomposition conditions. Boiler blowdown and cooling-water overflow are relatively minor discharges totaling less than 10 gallons per minute (0.00063 m^3/s).

Liquid discharges from the diesel generation system may have far more impact on the environment. The oil must be changed often in diesel generation systems. Typically, this oil is dumped on to the ground and has severe environmental consequences for both ground

pollution and gaseous emissions. A similar impact is found in the transportation, storage, and use of the diesel fuel. There are invariably spills and leaks which create air, soil, groundwater, and surface-water (runoff) pollution. The oil cooling systems also need periodic maintenance and recharging, which results in dumping; spillage; and other air, ground, and water pollution.

The solid discharges from waste biomass systems are almost exclusively in the form of ash. Waste biomass ash is historically valuable as a low-grade fertilizer that is spread on the surrounding lands. The existing diesel plant does not have any solid discharges of note. However, disposal of empty oil containers may be a problem.

10.2 Consider global-warming impacts

Global warming from production of greenhouse gasses (GHGs) is a serious environmental concern. The production of GHGs will be reduced significantly if the proposed waste-biomass-fueled project is completed. As mentioned above, the production of GHGs such as methane, volatile organic compounds (VOCs), and carbon dioxide in aggregate are significantly higher through natural decomposition as opposed to controlled combustion. However, in the absence of sound empirical data, calculations for credit for GHGs reductions as compared to decomposition will not be performed at this time. Should accurate data become available in the future, this area of emissions reduction should be revisited.

The other easily verifiable area of GHG reductions is offset of the emissions from the operation of the existing diesel generators achieved through fuel switching/displacement. The diesel generators emit significant amounts of CO_2 and other GHGs such as VOCs. These emissions are almost completely offset by the operation of the proposed-waste-biomass-fueled power production systems as shown in Appendix I for a 315-kW system.

10.3 Address regeneration and sustainability issues

The sources of waste biomass to be used as fuel are the ongoing logging, lumber, and other forest product activities that are the staple of the region. Although the forests regenerate slowly in the region, the logging activities are below the sustainability levels for regrowth. In addition, the logging concerns are actively replanting some of the prime harvesting areas. Despite these activities, modern U.S. forest management practices could improve the harvestable forest lands and increase sustainable harvest levels.

At present levels, the biomass required to fuel the needed electrical energy in any one region represents a small portion of the supply of waste biomass presently available. If use increases, other sources of waste biomass such as forest slash would enter the fuel stream. The fuel need for further growth also can be met by incorporation of more efficient technologies as the users become more sophisticated and rising fuel costs provide the incentive for increased efficiency. In no case will there be a need or economic justification to harvest wood solely to generate electricity.

For example, present quantities of waste generated by the Verkhni-Ozerski operations (including the waste left in the forest) would supply fuel for at least 2,000 kW of baseload power with the recommended technology, or approximately 4,000 kW with the next level

of proven combustion technology. This should allow biomass-fueled technologies to accommodate all reasonable growth in electrical demand due to the increased usage or increased population for the foreseeable future (mid- and long-term). It is reasonable to assume that population growth will only happen if forest products operations expand in Verkhni-Ozerski, which is tantamount to generation of more waste/by-product. If this expansion occurs, a more likely scenario is that biomass-fueled power will be connected to the main grids where possible. In this situation the waste-biomass-fueled power will provide baseload capacity to augment and offset fossil-fueled power plants. Certainly, the North American models of waste biomass utilization support this scenario. Regeneration, sustainability, and forest management practices should be addressed in more detail in the full feasibility study stage.

11. Determine the range of financing alternatives

The Russian Northern Territories renewable energy project is a regional and developmental program. The biomass-to-energy project in Verkhni-Ozerski is a pilot project that should be a learning and proving ground for the larger project (including its financing). International commercial banks generally are not interested in lending to developmental/regional or pilot projects. There is some limited private-sector commercial capital in Russia and the commercial banking sector is gradually improving. However, the long-term lending horizon for domestic commercial banks tends to be months rather than years and at high interest rates unaffordable to developmental projects. Because rural renewable energy projects have high up-front capital and low operations and maintenance costs, they need long-term financing (10 to 15 years) with low interest rates to be able to compete with and displace fossil fuels on a levelized basis over the life of the projects. Consequently, only multilateral and bilateral lending sources that offer long-term credit and are developmental in nature will be considered here.

11.1 Evaluate various financing scenarios involving federal and local governments, multilateral agencies, Global Environmental Facility, local private entities, and international private sources

The Northern Territories renewable energy project deals with many small sub-projects and is developmental in nature. Such a situation calls for World Bank financing because only the World Bank has the experience in structuring similar lending programs (e.g., India, Sri Lanka, Indonesia, and other places). The European Bank for Reconstruction and Development (EBRD) can be a co-lending source. The Russian Ministries of "Fuel and Energy" and "Economy," together with the State Committee on Development of the North, have officially asked the World Bank to provide a loan and a grant mechanism for the Northern Territories project (see Attachment 4). Obtaining a sovereign guarantee from the Ministry of Finance may be the stumbling block to the realization of that request. The Global Environmental Facility (GEF) may be a source of grant funding because the project has significant GHG reduction benefits; however, implementation would require overcoming the commercialization and institutional barriers identified in this study.

Prior to securing a large financing program for the entire Northern Territories renewable energy project, it is important and more practical to seek fast-moving lending sources to finance a few pilot projects, including the one in Verkhni-Ozerski. Some quick-financing options for the Verkhni-Ozerski pilot project are the World Bank, using the existing credit line for municipal energy efficiency projects in Russia, GEF, EBRD, or bilateral agencies such as the U.S. Export-Import Bank (EX-IM). The financing plan for any pilot project should be similar to the larger future program in order to learn meaningful and valuable lessons that can be applied to the larger initiatives.

The Russian federal government subsidizes the fuel transportation cost to some remote locations in the Northern Territories. Only the fuel used to power and heat municipally owned residential housing is subsidized. The federal government has indicated its tentative interest in allocating a part of the fuel subsidy budget in the form of grants, low-interest subordinated loans, or minority equity investments to facilitate financing renewable energy projects in the Northern Territories. Regional governments and a pool of private investors may also be interested in participating in this and following projects as minority investors. The residential housing in Verkhni-Ozerski village is not municipally owned, and

therefore, the village does not qualify for the federal government fuel subsidy. Nevertheless, the federal government funds should still be available for this project as a pilot demonstration effort.

11.2 Establish the level of financial guarantees required for attracting multilateral and/or private financing

Any World Bank lending program will require the endorsement of the Russian Ministry of Finance in the form of a sovereign guarantee. That may not be possible because the Russian government is quickly exhausting its capacity to offer new sovereign guarantees. Financing pilot projects through EBRD or EX-IM may not require a sovereign guarantee if certain private commercial banks can be identified that are acceptable to EBRD or EX-IM and that are willing and able to offer a loan repayment guarantee for a fee.

11.3 Include the impact on local employment and economy

The local employment and economy in Verkhni-Ozerski and similar off-grid villages is heavily dependent on the availability of affordable energy. The cost of fuel most often takes away a significant portion of an enterprise's revenues, making its continued operation less economically certain.

The annual sales for Onegales from all three logging operations in Verkhni-Ozerski, Malazhma, and Onega is about 260,000 cubic meters of wood @$17/cubic meter, or $4,420,000. The annual distillate-fuel cost at Verkhni-Ozerski is about $206,000 (see Appendix A). This does not include the cost of transporting the fuel by truck from Onega to Verkhni-Ozerski. Assuming about one-third of Onegales' sales, or $1.5 million, originates from Verkhni-Ozerski, purchase of fossil fuel to supply power to the village (including residents) takes away about 14% of gross revenues. In addition, Onegales has to meet other obligations such as payroll, income tax, payroll tax, lease for the forest, gasoline to operate mobile equipment, parts, capital improvements, road maintenance, replacement of diesel engines, and a whole range of social services and infrastructure needs.

Shareholders of Onegales face two choices: either cut power to village residents who work in the plant (an impractical concept), or shut down the plant and focus on the logging operations where there is grid power. Appendix J shows that the annual pretax net savings (cash flow) from the biomass/diesel backup power generation system is half of the annual cost of the existing system in the early years (for both 470-kW and 260-kW scenarios). The resulting energy cost would not be significantly higher than grid power; thus, Onegales should be motivated to continue its profit-making logging operations in Verkhni-Ozerski.

If enterprises such as Onegales are forced to shut down or move their operations, the villagers most probably will have to move to the cities, causing additional social and economic burdens on urban and federal systems. Furthermore, the majority of natural resources produced in Russia come from the Northern Territories which besides having strategic importance, also contribute heavily to Russia's foreign-exchange reserves.

Therefore, the Northern Territories population plays an important role in Russia's overall economic welfare.

Installation and servicing of renewable energy systems such as the waste-biomass-to-energy system in Verkhni-Ozerski will create new rural employment opportunities. Once the project gets to the regional replication stage, manufacturing of renewable energy equipment will also help put the idle industrial (especially formerly defense-related) capacity to productive use. Institutional capacity will be built in the form of new specialty companies to serve sub-projects in evaluation, training, operations, maintenance, spare-parts replenishment, loan application submittal, and loan service collection (product and financial chains of service). Formation of these companies will also create new employment opportunities. Reliable energy at the rural level will bring investments in new, value-added, raw-material (e.g., fishing, logging, agriculture, and mining) processing industries, leading to more economic growth and employment.

11.4 Discuss pros and cons of bundling projects, including other renewable energy projects, to reach a critical mass for independent development, volume discount, and bulk financing

The larger Northern Territories program is a bundled project comprised of many sub-projects at the village level that rely on various renewable energy resources and equipment. This in itself has enough critical mass to attract bulk financing from multilateral agencies provided certain sovereign (or otherwise) guarantees and return-on-investment criteria are met. Although bundling for the single pilot project at Verkhni-Ozerski is not feasible, cost savings through volume discounts and replication must be considered for the larger Northern Territories project.

In order to buy down the costs of evaluation and capital for the larger Northern Territories project and make renewable energy competitive, a GEF grant is important. Because GEF supports the involvement of the private sector, private ownership of the sub-projects should be encouraged. Either privatized village enterprises or private independent entities with heavy participation from the village enterprises are the reasonable choices to be the owners and obligors of various future sub-projects.

12. Propose future independent-development scenarios

12.1 Assess the potential for joint ventures with established local companies and the necessary incentives for independent power developers to invest in the project

There are no major independent power producer (IPP) companies in Russia. Internationally established IPPs and investors are usually not interested in small off-grid projects or projects that they are not controlling. Because there is no grid to sell power to, the concept of independent power generation used world-wide is irrelevant here. The "reasonable" owner of the proposed biomass power plant is Onegales, or a private entity controlled in large part by Onegales, because it will be the major beneficiary. It may make sense for Onegales to invite minority equity investors to the project to raise capital. This will require paying an acceptable return on equity.

The federal and regional governments are reasonable sources of grants or subordinated low-interest loans. Other potential investors in the project are local banks, the regional electric utility Arkhenergo, private companies that may have a role in the future construction or maintenance of the project, the lumber-mill in Onega that depends on logs produced in Verkhni-Ozerski, or any other investors attracted to the rate of return offered by the project.

12.2 Discuss technologies that facilitate purchase of power by individual users according to contractual agreements (e.g., load-limited service and power-based tariff)

Any multilateral or bilateral lending program used for the project will mandate that subsidies directed to defraying the high operations and maintenance (O&M) costs be eliminated. O&M subsidies are not dependable over the long run and risk the sustainability of the financing plan. A good case in point is the Onega District's current inability to meet its fossil-fuel subsidy obligations, thus causing a major economic burden for the village enterprise. As a consequence, the biomass power plant has to be sized in a way that there will be minimum use for diesel engines for peak-shaving purposes because fossil-fuel costs will not be subsidized any more. However, the biomass system has the drawback of high initial capital cost—the bigger the biomass system capacity, the greater the fossil-fuel displacement, but also the higher the capital-related costs.

This type of size optimization/fuel displacement exercise is an ideal situation for applying demand side management (DSM) techniques such as demand-related load management, which can help reduce both the biomass system capital and peak-period fossil-fuel costs.

DSM techniques such as aggressive load management can reduce the initial capital cost because the capital cost is related to the capacity selected to meet the maximum demand. In addition, DSM can also serve as a peak-period, fossil-fuel-saving method. The lower the peak demand and the flatter the load curve, the lower the need for expensive distillate fuel, and the lower the system (capital plus fuel and O&M) cost. Consequently, where local fuel (and thereby operations) costs are low but the capital cost to convert the local fuel is high, DSM techniques such as load management are far more important than supply-side and traditional demand-side energy efficiency methods. In other words, because diesel engines will be operating for a very limited number of hours for backup and peak-shaving purposes, any energy efficiency-related capital expense has to be justified

against the limited distillate-fuel consumption plus the inexpensive biomass fuel cost. This is because switching to local renewable energy is inherently a supply-side, fossil-fuel-conservation strategy.

Conversely, where switching to local inexpensive fuels is not an option, energy cost is fuel-driven rather than capital-driven; traditional demand-side energy efficiency measures such as weatherstripping, fluorescent lightbulbs, and insulation are more important; and DSM techniques such as load management are less important. However, if the diesel engines require replacement because of the old age or poor condition, load management becomes important in order to limit the potential number and/or capacity of the new diesel generators. The cost-effectiveness of DSM, load management, and energy efficiency opportunities should be evaluated carefully in the future phases of the feasibility study.

Currently, the power customers in Verkhni-Ozerski have meters and pay a flat rate for electricity consumed. Simple DSM methods to encourage peak-shaving are education- and consumption-based escalating tariffs known as power-based tariffs (PBTs). Time-of-use meter (TUM) is also known to be effective for industrial applications. Setting tariffs is the responsibility of the regional energy commission and is a politically sensitive issue. How effective one can be at influencing the commission to change the tariff structure is uncertain at this time. Implementing a successful PBT program also requires certain capital costs. Because Verkhni-Ozerski is a small community, education is expected to be the most cost-effective method to achieve DSM. Because the proposed project is for demonstration purposes, the effectiveness of applying PBTs should be explored. Consequently, in the full feasibility study stage, the requirements for implementing a successful PBT program should also be explored.

12.3 Evaluate methodology for competitive bidding by interested project developers

Major energy project developers active in international markets will not be interested in the proposed project because it is too small. As stated before, Onegales, or a private entity with a majority of its shares controlled by Onegales, is the reasonable owner/obligor for the project. The regional electric monopoly Arkhenergo may be interested in investing in the project provided the rate of return is attractive. Other private entities with a stake in either construction of the project or as downstream customers of the village logging products may also be interested in investing in the project. In the full feasibility stage, the issue of attracting private minority investors by offering an acceptable rate of return should be discussed in more detail.

13. Conclusions on the final decision criteria for the project

13.1 Draw conclusions as to the identifiable obstacles to the development of the project and future projects and suggest strategies for mitigation

Major obstacles to the development of the proposed pilot project and the larger-scale follow-up projects are as follows:

13.1.1 High up-front costs including capital

Renewable energy projects in general are hampered by large up-front capital costs. Reallocation of a portion of the federal budget currently earmarked to subsidize transport of fossil fuels to remote places and a grant from the GEF and/or other multilateral and bilateral agencies will help to buy down the initial capital costs. Other methods for reducing up-front project costs include local manufacturing of equipment; large-scale production; standardization of project evaluations; and maximization of local labor participation in project evaluations, loan documentation, and construction.

13.1.2 Lack of resource assessment data

Although we have good information about the biomass resources available for electric conversion at the site of the proposed pilot project, that information is not readily available for other villages where replication may be warranted. A GEF and United Nations Development Program (UNDP) or other donor-sponsored resource assessment effort for biomass and other renewable energy options in the entire Northern Territories is necessary to alleviate this obstacle.

13.1.3 Lack of reliable legal system to protect contracts

As discussed earlier, Russia has the reputation of being a difficult place to enforce contract agreements after the fact. The technology and know-how to produce biomass conversion and other renewable energy equipment does not exist in Russia at this time. Because local manufacturing of equipment (due to inexpensive labor and transportation) is important to reduce capital costs, transfer of U.S. or other Western know-how is necessary. This transfer of know-how will not happen unless genuine guarantees are established to ensure payment of royalty and licensing fees according to terms of agreement. In Sections 7.4 and 7.5 we discussed how bilateral or multilateral agreements or financing programs may provide a solution to this problem.

13.1.4 Subsidized and uniform residential tariffs discourage demand-side management

As discussed earlier, the rate paid by village residents for power is far below the actual cost. If Onegales assumes the ownership of the project, its industrial (i.e., logging) operation has to cross-subsidize the rate paid by village residents, who are the workers of Onegales. This cross-subsidy and also the uniform residential power rate will eliminate any incentive on the part of village residents to practice

demand-side management and efficiency. DSM can be an important tool in bolstering the competitiveness of the biomass system. Onegales would certainly be interested in practicing load management for its industrial operation by running the wood chipper and crane only during off-peak hours. Meanwhile, residential ratepayers should be educated to practice DSM. Application of a PBD program should be evaluated in the full feasibility study.

13.1.5 Lack of institutional capacity to perform resource assessment, project evaluation, sub-lending services, and sub-project operational services

Basic institutional capacity to perform sub-project product and financial services is lacking in remote rural locations in Russia. Once the project reaches the replication planning stage, the necessary institutional capacity should be established to perform resource assessment, sub-project feasibility study, sub-loan application preparation and evaluation, training of operators, maintenance support, and debt service collection. GEF and bilateral sources will be candidates to fund this institutional-capacity-building process.

13.2 Summarize the project continuation/development opportunities, requirements, and constraints

The prefeasibility study demonstrates that the project merits continuation and a full feasibility analysis. The demonstrated rate of return and net positive cash flow (see Appendix J), willingness of Onegales and local/regional authorities to cooperate, and the immense social benefits are all positive and valid reasons to continue with the project. The project will also act as a stepping stone for the emerging renewable energy manufacturing base in Russia and establish an institutional capacity to serve many renewable energy projects throughout the Northern Territories. The need to replace or offer life extension to the existing infrastructure—the aging diesel engines and district heating furnaces—is another valid reason to move forward with the project. Besides conducting a full feasibility analysis, the project proponents should simultaneously seek pilot project financing mechanisms. The World Bank, U.S. Export-Import Bank, the European Bank for Reconstruction and Development, and the Global Environment Facility are all prospective sources for providing such mechanisms.

The ensuing full feasibility study should address the following:

1) Analyze the distillate-fuel delivery infrastructure.
2) Prepare detailed specifications for the equipment.
3) Solicit quotes from equipment suppliers including local components.
4) Identify potential suppliers of all equipment and services.
5) Determine actual cost reductions for multiple-unit purchases and volume discounts.
6) Explore measures facilitating technology transfer.
7) Analyze demand, ability-to-pay, low-cost grid-extension methods, and power purchase agreements for surrounding villages, to be potentially interconnected to Verkhni-Ozerski by the future mini-grid.
8) Identify other off-grid villages in the region for potential replication.

9) Propose an institutional-capacity-building program to deliver product and financial services at the sub-project level.
10) Study waste biomass resource availability, forest regeneration, and prevalent forest management practices and impact of the project on forest health.
11) Review Russian and World Bank environmental requirements and design the project to meet those requirements.
12) Propose optimum ownership structure for the project to enhance the ability to obtain equity and debt capital.
13) Contact appropriate financing sources and recommend workable financing programs that include the means to obtain local equity.
14) Suggest the necessary steps for the central government to take in order to stimulate new sources of financing for the project.

BIBLIOGRAPHY

Ahm, P. (1996). "Kola Wind Energy Project—Issues Supporting Regional Development," PA-Energy Ltd.

Bezriukikh, P.P.; Tsetserin, U.A.; Mikhailov, S.A. (1996). "Summary of Regional Strategic Project, Energy Supply to Northern Territories." Presented at Solar Summit, Moscow, Russia, July 1996.

Darup Associates Ltd. (June 1996). "Kola Wind Project."

Flowers, L.T. (1997). "Renewables for Sustainable Village Power." NREL/CP-440-22608. Presented at International Conference for Village Electrification through Renewable Energy, New Delhi, India, March 1997.

Hansen, R.D. (1997). "NGO and ESCO Models for a Market-Driven Transition to Sustainable Energy." (presentation abstract) Presented at World Bank Roundtable on Rural Energy and Development, Washington, D.C., April 1997.

Intersolarcenter. (1996). Final Report on Project "Rural Site Electrification." Prepared under National Renewable Energy Subcontract No. AAX-6-15332-01.

Kononov, V.; Kozlow. B.; Diadkin; Y. (1995). "The Present State of Geothermal Energy Utilization in Russia."

Martinot, E.; Touryan, K.J. (May 1996). "Investing in Renewable Energy in Russia: A Report for the World Bank."

Rensman, R. (June 1995). "The Russian Electricity Supply Industry, a Changing Market and Investment Opportunity." *Business in Russia*, Supplement Edition.

Strebkov, D. (1997). "Strategic Project: Renewable Energy for Rural Electrification." All Russian Institute of Electrification of Agriculture.

Strebkov, D. (1997). "Strategic Project: Biomass Energy Conversion." All Russian Institute of Electrification of Agriculture.

Stuggins, G.; Wilson M. (March 1997). Personal communication. World Bank.

The World Bank. (May 1997). "Electricity Sector Reform Support Project." Report No. T7126 RU.

APPENDIX A

ANNUAL COST of DIESEL FUEL
for
RUSSIAN WASTE BIOMASS ENERGY PILOT PROJECT

A. CURRENT DIESEL FUEL COSTS

The most significant cost-savings benefit from waste-biomass-fuel electric generation is the reduction in #2 fuel oil costs. The biomass plant requires some costs of operation. However, the additional costs required to produce energy from biomass are more than offset by the reduction in non-fuel operating costs of the diesel generation equipment as set forth in Appendix C. Therefore, the #2 (diesel) fuel oil cost savings represent a net cost savings and increased profitability for the forest products company that owns and operates the village power plant.

Based on annual average operating data and fuel purchase records, current (1995/1996) #2 fuel oil costs derived from diesel operations are determined as follows:

1. The average 5-month (May-September) 1995 daily diesel fuel consumption was 0.900 tonnes (t_m).
2. The average 7-month (October-April) 1995-1996 daily diesel fuel consumption was 2.330 tonnes (t_m).
3. The maximum daily (5-10 days) winter-peak diesel fuel consumption was 3.000 tonnes (t_m).
4. The average net kilowatt-hour (kWh) requires 0.318 kg of diesel fuel. This number was given to us by the Onega District Administrator and is used as a benchmark number for fuel subsidy calculation. The actual distillate-fuel-consumption rate is anticipated to be much higher.
5. The current (1996) cost of a tonne (t_m) of diesel fuel delivered to the village power plant is 1,754,000 Russian rubles (R).
6. The exchange rate used in this analysis (from September 1996) was 5,500 Russian rubles per U.S. dollar (5,500 R/$1.00).

From the above, the delivered cost of diesel fuel at the village can be shown as:

(1,754 kR/t_m) / (5.5 kR/$1.00) = $318.90/$t_m$
or $318.90/$t_m$ / 2,205 lb/t_m = $0.1446/lb
or $0.446/$lb_{oil}$ (7.206 lb_{oil}/gal) = $1.042/gal
or $1.042/gal (1 gal/3.785 lit) = $0.275/lit

The 1995-1996 diesel fuel costs can be calculated as follows:

1995	
5 months (30 days/month) 0.900 t_m/day ($318.90/$t_m$) =	$43,052
November - 1995-1996	
7 months (30 days/month) 2.330 t_m/day ($318.90/$t_m$) =	$156,038
Winter load 5-10	
7.5 days (3.000 t_m/day) $318.90/$t_m$ =	$ 7,175
Total Current Annual Diesel Fuel Oil Cost =	$206,265

The diesel fuel cost component of power produced is:

($318.90 t_m / 1,000 kg/t_m) / (1 kWh/0.318 kg) = $0.1014/kWh

The 1995-1996 diesel-fueled power production can be calculated as follows:

May - October 1995

5 months (30 days/month) $43,052 / $0.1014/kWh = 424,576 kWh

November - April 1995-1996

7 months (30 days/month) $156,038 / $0.1014/kWh = 1,538,836 kWh

Winter Peak Load 5-10 days

7.5 days (3.000 t_m/day) $7,175 / $0.1014/kWh = 70,759 kWh

Total Present Annual Diesel Power Production = 2,034,171 kWh

The 1995-1996 diesel-fueled power production can be calculated as follows:

May-October 1995

424,576 kWh / [5 months (30 days/month)] = 2,831 kWh/day

November-April 1995-1996

1,538,836 kWh / [7 months (30 days/month)] = 7,328 kWh/day

Winter Peak Load 5-10 days

70,759 kWh / 7.5 days = 9,434 kWh/day

B. DIESEL FUEL COSTS WITH FUTURE BIOMASS OPERATIONS

The biomass operations will continue to require diesel-fueled generation for emergency standby, for scheduled outages of the biomass plant, and for winter peaking loads. The assumptions used for calculating the diesel fuel required with biomass operations are as follows:

1. The biomass-fueled system will operate 7,500 hours per year.
2. The scheduled maintenance outage will be taken in the summer for two weeks.
3. Unscheduled outages will occur equally throughout the year.
4. Outages are equally likely to occur during all hours of operation during the day.

Scenario 1

The 470 net kW waste-biomass plant will require diesel-fueled operations as follows:

Summer Scheduled Outage: 2,831 kWh/d (7 d/wk) 2 wk =	39,634 kWh
Summer Unscheduled Outages: 2,831 kWh/d (16 d) =	45,296 kWh
Winter Unscheduled Outages: 7,328 kWh/d (22.5 d) =	164,880 kWh
Subtotal Biomass Outage Consumption =	249,810 kWh
Winter Peak Load: 315 kW (6 h/day) 7.5 days =	14,175 kWh
Total Annual Diesel-Fueled Power	**263,985 kWh**

Annual diesel power required = 263,985 kWh / 2,034,171 kWh = 0.1298 or 12.98%. This means that biomass displaces 87.02% of distillate fuel.

Total annual diesel fuel cost with biomass operation: $206,265 (0.1298) = $26,773

Scenario 2

The 260 net kW waste-biomass plant will require diesel-fueled operations as follows:

Summer Scheduled Outage: 2,831 kWh/d (7 d/wk) 2 wk =	39,634 kWh
Summer Unscheduled Outages: 2,831 kWh/d (16 d) =	45,296 kWh
Winter Unscheduled Outages: 5,658 kWh/d (22.5 d) =	127,305 kWh
Subtotal Biomass Outage Consumption =	212,235 kWh
Winter Diesel Load: 1,680 kWh/day (210 days) =	352,800 kWh
Winter Peak Load: 3,194 kWh/day (7.5 days) =	23,955 kWh
Total Annual Diesel-Fueled Power	**588,990 kWh**

Annual diesel power required = 588,990 kWh / 2,034,171 kWh = 0.2895 or 28.95%. This means that biomass displaces 71.05% of distillate fuel.

Total annual diesel fuel cost with biomass operation: $206,265 (0.2895) = $59,714

APPENDIX B

COST of BIOMASS FUEL
for
RUSSIAN WASTE BIOMASS ENERGY PILOT PROJECT

FUEL COSTS

Assumptions:

1. Raw biomass processing costs including all labor and equipment for forest cutting and collection, loading and unloading, and the labor for sizing are not a cost factor because they will be provided by the current infrastructure.

2. Transportation costs for waste biomass to be processed is only the marginal cost of the added fuel used to transport the waste biomass along with merchantable logs, which is estimated to average $0.50/wet tonne.

3. Profit is not a factor because biomass supply cost as a component of energy generation is treated as a part of cost of operations.

4. 50% average fuel moisture content.

5. Waste softwood and hardwood mixed higher heating value is 8,400 Btu/dry lb (19,500 kJ/ dry kg).

Total fuel costs per the above assumptions will then be no more than $0.50/wet tonne as received at the pilot project plant site.

- The waste-biomass-fuel higher heating value as received, per the above assumptions, is calculated to be:

  8,400 Btu/dry lb (0.5 dry lb/lb as received) = 4,200 Btu/lb (9,750 kJ/kg) as received

- The calculated gross and net heat rates for electric generation are 53,800 Btu/kWh, gross (23,100 kJ/kWh, gross) and 64,100 Btu/kWh, net (27,600 kJ/kWh, net).

- The cost per tonne as received can then be calculated as follows:

  ($0.50/tonne) / [4.2 kBtu/lb(2.2 klb/tonne)] = $0.0541/MBtu

- The fuel cost per kWh can then be calculated as follows:

  $0.0541/MBtu(0.0641 MBtu/kWh) = $0.00347/kWh

SCENARIO 1

The average annual operating waste-biomass-fueled electrical consumption for the 470-kW scenario can be derived from Appendix A as:

Total Present Annual Diesel Power Production =	2,034,171 kWh
Less Total Annual Backup Diesel-Fueled Power -	263,985 kWh
Total Annual Biomass Power Production	1,770,186 kWh

The annual cost of waste biomass fuel required for electric generation can then be calculated as follows:

1,770,186 kWh/yr($0.00347/kWh) = $6,139/yr

SCENARIO 2

The average annual operating waste-biomass-fueled electrical consumption for the 260-kW scenario can be derived from Appendix A as:

Total Present Annual Diesel Power Production =	2,034,171 kWh
Less Total Annual Backup Diesel-Fueled Power	- 588,990 kWh
Total Annual Biomass Power Production	**1,445,181 kWh**

The annual cost of waste biomass fuel required for electric generation can then be calculated as follows:

1,445,181 kWh/yr($0.00347/kWh) = **$5,012/yr**

APPENDIX C

COST of OPERATION and MAINTENANCE
for
CURRENT AND FUTURE RUSSIAN DIESEL-FUELED OPERATIONS

CURRENT AND FUTURE SCENARIOS 1 and 2 OPERATION and MAINTENANCE (O&M) COSTS:

ITEM	DESCRIPTION	CURRENT ANNUAL COST ($)	SCN. 1 ANNUAL COST ($)	SCN. 2 ANNUAL COST ($)
1. Oil Changes	Cooling and lubrication oil	7,110	948	3,360
2. Min.Upper Unit	Heads and assoc. equip.	9,480	1,264	4,480
3. Maj.Upper Unit	Ejectors and outside machining	11,850	1,580	5,600
4. Full Overhaul	Major upper and lower repair	13,543	1,806	6,400
O&M	**Totals**	**41,983**	**5,598**	**19,840**

The costs are based on 14,220 current annual operating hours for the diesel generation equipment, and 1,896 future scenario 1 (470-kW waste-biomass-fueled pilot plant) and 6,720 Future Scenario 2 (260-kW waste-biomass-fueled pilot plant) average annual operating hours over a 15 year period. The above annual cost estimates assume that all other charges remain constant and that costs not required in any one year are accumulated in a reserve account.

The O&M costs were determined for each item as follows:

1. Oil Changes (oc)-Cost of cooling and lubrication oils, filters, etc. at $1,000/oc required every 2,000 operating hours calculated as follows:

   Current—(14,220 hr/yr / 2,000 hr/oc) $1,000/oc = $7,110/yr
   Future (S1)—(1,896 hr/yr / 2,000 hr/oc) $1,000/oc = $948/yr
   Future (S2)—(6,720 hr/yr / 2,000 hr/oc) $1,000/oc = $3,360/yr

2. Min. Upper Unit (mu)- Cost of routine maintenance of upper diesel including replacing broken springs, worn rockers and other moving parts, rebuilding ejectors, lapping valve seats, etc. at an average of $4,000/mu required every 6,000 operating hours, calculated as follows:

   Current—(14,220 hr/yr / 6,000 hr/mu) $4,000/mu = $9,480/yr
   Future (S1)—(1,896 hr/yr / 6,000 hr/mu) $4,000/mu = $1,264/yr
   Future (S2)—(6,720 hr/yr / 6,000 hr/mu) $4,000/mu = $4,480/yr

3. Maj. Upper Unit (mau) - Cost of major overhaul of upper diesel including sending heads out for reconditioning at an average of $15,000/mau required every 18,000 operating hours, calculated as follows:

   Current—(14,220 hr/yr / 18,000 hr/mau) $15,000/mau = $11,850/yr
   Future (S1)—(1,896 hr/yr / 18,000 hr/mau) $15,000/mau = $1,580/yr
   Future (S2)—(6,720 hr/yr / 18,000 hr/mau) $15,000/mau = $5,600/yr

4. Full Overhaul (fo) - Cost of major overhaul of upper and lower diesel including sending heads and crankshaft out for reconditioning at an average of $40,000/fo required every 42,000 operating hours calculated as follows:

Current—(14,220 hr/yr / 42,000 hr/fo) $40,000/fo = $13,543/yr
Future (S1)—(1,896 hr/yr / 42,000 hr/fo) $40,000/fo = $1,806/yr
Future (S2)—(6,720 hr/yr / 42,000 hr/fo) $40,000/fo = $6,400/yr

APPENDIX D

COST of OPERATION and MAINTENANCE
for
RUSSIAN WASTE BIOMASS ENERGY PILOT PROJECT

ANNUAL OPERATION AND MAINTENANCE (O&M) COSTS:

	ITEM	DESCRIPTION	SCN. 1 ANNUAL COST ($)	SCN. 2 ANNUAL COST ($)
1.	Auxiliary Fuel	Peaking loads, sched.and unsched. Outages	N/A	N/A
2.	Real Estate Tax	For land and plant facilities	N/C	N/C
3.	Maintenance	Includes material and outside labor	9,400	6,800
4.	Spare Parts	Restocking and local spare parts only	7,300	4,700
5.	Consumables	Water treatment chem., lube, oils, etc.	3,500	2,300
6.	Ash Removal	Continues local land application	N/C	N/C
7.	Administrative	Plant overhead and office supplies	N/C	N/C
8.	Miscellaneous	Outside engineering and maintenance	11,700	8,300
9.	Cap. Improvement	Reserve accumulation for future use	N/C	N/C
	O&M	**Total**	**31,900**	**22,100**

Notes: 1. N/A means "not applicable" and N/C means "no change".
2. SCN 1 means Scenario 1, which is the 470-kW waste-biomass-fueled system.
3. SCN 2 means Scenario 2 which is the 260-kW waste-biomass-fueled system.

The above annual cost estimates assume one scheduled outage totaling 2 weeks, and numerous unscheduled outages totaling 240 additional hours of downtime. Estimates do not include annual biomass fuel costs (Appendix B) or any other external costs, which are calculated separately.

The O&M costs were determined for each item as follows:

1. Auxiliary Fuel - The existing diesel generator installation will provide backup, peaking, and outage load capacity and does not add to the operating cost calculations. However, use of the existing diesel generation equipment will affect the cost by reducing the fuel savings resulting from installation of the waste-biomass-fueled facility as set forth in Appendix A.

2. Real Estate Tax - The current tax assessments, if any, for land and real property are not expected to be affected.

3. Maintenance - Assumes turbine retrofit and partial re-tubing every 5 years, refractory every year, etc.

4. Spare Parts - Assumes replacement of all spares used for U.S. equipment, including all conveying and auxiliary systems from U.S. suppliers.

5. Consumables - Includes oil, grease, water treatment chemicals, hydraulic fluids, etc. from local supply sources.

6. Ash Removal - Local gardens already use ash from district heating for soil conditioning and fertilizing.

7. The present village administration is not expected to alter present practices and personnel requirements.

8. Assumes that outside professional services will be contracted every other year. This cost will be reduced as local labor learns the techniques and practices.

9. Capital Improvement - Funds to allow for improvements to plant and operations, such as personnel training and equipment upgrades, should not be changed from current practices.

APPENDIX E

LABOR COST ESTIMATES
for
RUSSIAN WASTE BIOMASS ENERGY PILOT PROJECT

ANNUAL LABOR COSTS:

The current labor pool in the village operates, maintains, and repairs the existing wood-fired district-heating and diesel electric generating systems, including the high- and low-voltage electric systems. Because, under Scenario 1, the 470-kW waste-biomass-fired electric generating system replaces 87% of the diesel generation and 50% of the district heating, it is expected that the waste-biomass plant will not add any additional labor requirements or annual labor costs to the current energy operations. In fact, because the proposed waste-biomass-energy generating plant is more automated than the current energy systems, there may be less direct labor required.

Under Scenario 2, the 260-kW waste-biomass-fired electric generating system still replaces almost 100% of the diesel generating load during the summer months (71% for the entire year). The exception may be some unusual peaking requirements and any scheduled and unscheduled maintenance outages in the summer. During the winter operations, the waste-biomass-fueled operations would supply approximately one fourth of the heating load and less than 71% of the electric load. This means that only one diesel would be required to be operated for most of the winter operations with an additional diesel being required to meet daily peaking requirements and a third diesel required for backup. The assumption is that no additional labor will be required to operate the waste-biomass equipment, although this assumption is not as conservative as the same assumption under Scenario 1.

It is likely that the skilled and semiskilled labor force in the village will be capable of doing most of the repairs and maintenance allocated to outside labor in the operating cost estimates provided in Appendix D. Because this work will be provided as part of the day-to-day work activities already covered by the cost basis of current operations, the total costs required to operate and maintain the waste biomass energy system will be reduced accordingly.

APPENDIX F

HARD COST ESTIMATES
for
RUSSIAN WASTE BIOMASS ENERGY PILOT PROJECT

A. ENGINEERING, PROCUREMENT, AND CONSTRUCTION (EPC) COSTS

Table 1 (below) shows the full cost structure for each scenario as if a firm were hired to engineer, procure, and construct the waste-biomass-energy pilot plant on a "turnkey" basis. Additional tables for each scenario show the cost savings that may be realized by using existing and local labor and equipment, and by buying only those special or proprietary items from foreign sources. The additional tables also show the cost savings that may be realized if multiunit procurements were taken into consideration, such that certain common engineering and design elements can be spread over several applications. Additional volume discounts may still be negotiated with vendors if several large orders are placed.

TABLE 1: EPC Costs

	DESCRIPTION	SCN. 1 COST ($M)	SCN. 2 COST ($M)
1.	Boiler Equipment Module (w/pol. Control, fans, pumps, etc.)	108	86
2.	Turbine/Generator Equipment Module	71	56
3.	Water Treatment Module	15	11
4.	Plant Facilities Systems (w/ buildings and structural)	123	97
5.	Electrical, Controls and Instrumentation (w/ trans. and MCCs)	43	37
6.	Material Handling and Processing Systems	108	88
7.	Construction and Installation (w/ concrete)	198	132
8.	Engineering and Design	223	223
9.	Construction Supervision (w/ start-up, training and exp.)	113	113
10.	Shipping, Import Duties, Taxes and Fees	58	46
11.	**Subtotal EPC Costs**	**1,060**	**889**
12.	Contingency of 10%	106	89
13.	**Total EPC ("Hard") Costs**	**1,166**	**978**

The following assumptions were made for the preceding "hard" cost determinations:

1. The construction will be performed with Russian skilled labor.
2. The boiler and turbine/generation modules will be shipped from the United States.
3. Land will be donated.
4. Site preparation is not included.
5. Roads and other access requirements are not included.
6. Biomass Fuel and Environmental Impact Assessment costs are not included.
7. Feasibility studies and technical transfer costs are not included.

B. EPC, MODULAR, MULTIUNIT, AND AVOIDED COSTS

Tables 2 and 3 show the full cost structure of EPC "hard" costs versus hard costs resulting from estimates of modular purchases of equipment with a maximum of local content, versus the same components purchased on a one of ten multiunit purchase for Scenario 1 (470 kW) and Scenario 2 (260 kW), respectively. Also included (under the heading Financing Cost) are the hard cost estimates expected if local owners use their existing internal labor and materials infrastructure to the maximum extent possible to avoid higher external and financing costs.

TABLE 2: Scenario 1

	A – EPC			B - Local/Modular			C - Local/Multiunit		
ITEM	EPC COST ($M)	AVOID. COST ($M)	FINAN. COST ($M)	MOD. COST ($M)	AVOID. COST ($M)	FINAN. COST ($M)	M.U. COST ($M)	AVOID. COST ($M)	FINAN. COST ($M)
1.	108	0	108	97	0	97	92	0	92
2.	71	0	71	64	0	64	61	0	61
3.	15	0	15	15	0	15	14	0	14
4.	123	123	0	123	123	0	117	117	0
5.	43	0	43	43	0	43	41	0	41
6.	108	31	77	103	26	77	98	25	73
7.	198	198	0	198	198	0	168	168	0
8.	223	37	186	190	74	116	162	63	99
9.	113	0	113	38	11	27	32	10	22
10.	58	7	51	0	0	0	0	0	0
11.	1,060	396	664	871	432	439	785	383	402
12.	106	40	66	87	43	44	78	38	40
13.	1,166	436	730	958	475	483	864	422	442

Note: The item numbers correspond to the descriptions provided in Table 1.

TABLE 3: Scenario 2

	A - EPC			B - Local/Modular			C - Local/Multiunit		
ITEM	EPC COST ($M)	AVOID. COST ($M)	FINAN. COST ($M)	MOD. COST ($M)	AVOID. COST ($M)	FINAN. COST ($M)	M.-U. COST ($M)	AVOID. COST ($M)	FINAN. COST ($M)
1.	86	0	86	77	0	77	73	0	73
2.	56	0	56	47	0	47	44	0	44
3.	11	0	11	11	0	11	10	0	10
4.	97	97	0	97	97	0	92	92	0
5.	37	0	37	37	0	37	35	0	35
6.	88	25	63	84	24	60	80	23	57
7.	132	132	0	132	132	0	112	112	0
8.	223	37	186	190	74	116	162	63	99
9.	113	0	113	38	11	27	32	10	22
10.	46	6	40	0	0	0	0	0	0
11.	889	297	592	713	338	375	640	300	340
12.	89	36	53	71	34	44	64	30	34
13.	978	333	645	784	372	419	704	330	374

Note: The item numbers correspond to the descriptions provided in Table 7.

The changes in assumptions made for the above hard cost determinations for each scenario are as follows:

A - EPC: No changes in the base assumptions. The avoided costs are based on using local construction and existing infrastructure and equipment. For example, the pilot project village logging mill owns chipping equipment that could be used in lieu of U.S.-purchased equipment. The site village personnel have the ability to do all construction labor and procure materials and supplies for the required building structures.

B - Local/Modular: Assumes that all components are manufactured locally and that some of the engineering and all the construction supervision is handled locally.

C - Local/Multiunit: Assumes multiunit purchase savings for all components and engineering.

APPENDIX G

FINANCING AND FEASIBILITY STUDY COST ESTIMATES for RUSSIAN WASTE BIOMASS ENERGY PILOT PROJECT

FINANCING COSTS

Commercial biomass-to-energy projects are normally subject to typical bank financing fees and loan-closing charges, which are estimated to be **7.50% of the loan amount**. The average project fee cost would be lowered if several projects were completed under a multiunit loan program to be installed at many sites, including the pilot project. The closing fee for multiunit developmental projects should be even lower. Not enough is known about the multiunit or developmental project financing costs at this time to allow for a reasonable estimate.

FEASIBILITY STUDY COSTS

The estimated costs required prior to developing the single-unit pilot project, which have not been included in the soft cost determination, are estimated as follows:

		COST ($M)
1.	Pre-feasibility Assessment (rough budget pricing) not covered by NREL funding.	33
2.	Feasibility Study (firm pricing) and negotiated technical transfer agreements for U.S.-based technology for a minimum of 10 sites.	300
3.	Environmental Impact Assessment (pilot and 9 additional sites)	70
4.	Waste-Biomass Assessment (pilot and 9 additional sites)	50
	Subtotal Feasibility Study Costs	**453**
5.	Contingency of 10%	45
	TOTAL FEASIBILITY STUDY COSTS	**498**

APPENDIX H

DIESEL ENGINE AND DISTRICT-HEATING BOILER LIFE-EXTENSION CALCULATIONS for RUSSIAN WASTE-BIOMASS-ENERGY PILOT PROJECT

I. SCENARIO 1 – 470-kW BIOMASS OPERATIONS

A. FUTURE DIESEL/GENERATOR REPLACEMENT

Assumptions:

1. If the biomass equipment is **not** installed, then the existing diesel/generator equipment will need to be replaced according to the following schedule:
   a) The first unit will be replaced in the summer of 1999.
   b) The second unit will be replaced in the summer of 2001 if its life is extended by the referential use of the new diesel equipment.
   c) The third unit will be replaced in the summer of 2003 if its life is extended by the preferential use of the newest diesel equipment.
2. The salvage value of each of the existing diesel/generator units is $10,000.
3. The cost of each replacement installation (in 1997 dollars) is estimated to be $400/kW: 315 kW ($400/kW) = $126,000.

<u>Life-Extension Calculations:</u>

The installation of a waste biomass energy plant in the summer of 1999 eliminates the need to replace two of the three diesel/generator units. One of the three existing units will ultimately need to be replaced to provide the necessary emergency and peaking capacity. The savings resulting from avoiding the purchase of each of the two diesel/ generator units that will not need to be replaced is calculated as follows:

$126,000/unit - $10,000/unit = $116,000/unit

As noted above, the third diesel/generator unit must be replaced. However, because the biomass plant will be on line in 1999 and will provide a large majority of the electric load, the remaining two diesel/generator units will operate fewer hours. Using the same hours of life as they would otherwise be expected to operate, the biomass project will extend the operation of the second unit (to be replaced in 2001), which will now be scrapped, by three years, and the unit to be replaced in 2003 by an additional six years.

Overall, the life extension of the two remaining diesel/generators is 9 years and it will be at least 10 years after the biomass plant is brought on line before a replacement backup diesel is required. In addition, the replacement diesel/generator now scheduled to be purchased in 2009 will be subjected to much lighter duty than it would under current diesel-fuel-only operations, and its life will be prolonged accordingly.

B. FUTURE DISTRICT-HEATING BOILER REPLACEMENT

Assumptions:

1. If the biomass plant is **not** installed, then the existing district-heating boiler equipment will need to be replaced according to the following schedule:
   a) The first unit will be replaced in the summer of 1997.
   b) The second unit will be replaced in the summer of 1999.
   c) The third unit will be replaced in the summer of 2003.
   d) The fourth unit will be replaced in the summer of 2003.
2. The salvage value of each of the existing boiler units is zero.
3. The cost of each replacement installation (in 1997 dollars) is estimated to be $80,000.

Life-Extension Calculations:

The installation of a waste-biomass-energy plant in the summer of 1999 eliminates the need to replace one of the four district-heating boiler units. The other three units will need to be replaced to provide the necessary district-heating and hot-water capacity. However, because the biomass plant will be on line in 1999 and will provide a portion of the district-heating and hot-water load, the remaining boiler units will operate fewer hours. Using the same hours of life as they would otherwise be expected to operate, the biomass project will extend the operation of the two boiler units to be replaced after 1999 as calculated below:

Current Case Boiler Operations:

Summer - 1 unit (5 months) 30 days/month (24 hr/day) =	3,600 hr
+ 1 unit (5 months) 30 days/month (6 hr/day) =	900 hr
Winter - 3 units (7 months) 30 days/month (24 hr/day) =	15,120 hr
+ 1 unit (7 months) 30 days/month (6 hr/day) =	1,260 hr
Winter Peak - 4 units (7.5 days) 24 hr/day =	720 hr
Total annual operating hours =	21,600 hr

The annual operating hours/boiler would be: 21,600 hr / 4 boilers = 5,400 hr/boiler

Biomass/Electric Case Boiler Operations:

Summer - 1 unit (14 days) 24 hr/day =	336 hr
+ 1 unit (14 days) 6 hr/day =	84 hr
Winter - 2 units (7 months) 30 days/month (24 hr/day) =	10,080 hr
+ 1 unit (7 months) 30 days/month (6 hr/day) =	1,260 hr
Winter Peak - 3 units (7.5 days) 24 hr/day =	540 hr
Subtotal annual operating hours =	12,300 hr
Additional unscheduled biomass boiler outages	120 hr
Total annual operating hours =	12,420 hr

The annual operating hours/boiler would be: 12,420 hr / 3 boilers = 4,140 hr/boiler.

The reduction in the annual operating hr/boiler is: (5,400 - 4140) = 1,260 hr/boiler.

Extending the life of three boilers by 1,260 hr/yr for 4 yr = 15,120 hr of additional life.

The two boilers to be replaced in 2003 would receive approximately 2 years of additional life each.

II. SCENARIO 2 – 260-kW BIOMASS OPERATIONS

A. FUTURE DIESEL/GENERATOR REPLACEMENT

Assumptions:

1. If the biomass equipment is **not** installed, then the existing diesel/generator equipment will need to be replaced according to the following schedule:
   a) The first unit will be replaced in the summer of 1999.
   b) The second unit will be replaced in the summer of 2001 if its life is extended by the preferential use of the new diesel equipment.
   c) The third unit will be replaced in the summer of 2003 if its life is extended by the preferential use of the newest diesel equipment.
2. The salvage value of each of the existing diesel/generator units is $10,000.
3. The cost of each replacement installation (in 1997 dollars) is estimated to be $400/kW: 315 kW ($400/kW) = $126,000.

Life-Extension Calculations:

The installation of a waste biomass energy plant in the summer of 1999 eliminates the need to replace one of the three diesel/generator units. Two units will continue to need to be operated, although at a lower service factor, to provide the necessary supplemental, emergency, and peaking capacity. The savings resulting from avoiding the purchase of one of the three diesel/generator units is calculated as follows:

$126,000 - $10,000 = $116,000

The second and third diesel/generator units must still be replaced. However, because the biomass plant will be on line in 1999 and will provide a majority of the electric load, the remaining two diesel/generator units will operate at lower outputs and for fewer hours. Using the same hours of life as they would otherwise be expected to operate, the biomass project will extend the operation of the unit to be replaced in 2001 by two years and the unit to be replaced in 2003 by an additional four years. The overall six-year life extension for the two diesel/generators represents a considerable savings in the future investment requirements of the power generation systems.

B. FUTURE DISTRICT-HEATING BOILER REPLACEMENT

Assumptions:

1. If the biomass plant is **not** installed, then the existing district-heating boiler equipment will need to be replaced according to the following schedule:
   a) The first unit will be replaced in the summer of 1997.
   b) The second unit will be replaced in the summer of 1999.
   c) The third unit will be replaced in the summer of 2003.
   d) The fourth unit will be replaced in the summer of 2003.
2. The salvage value of each of the existing boiler units is zero.
3. The cost of each replacement installation (in 1997 dollars) is estimated to be $80,000.

Life-Extension Calculations:

The installation of a waste-biomass-energy plant in the summer of 1999 eliminates the need to replace one of the four boiler units. The other three units will need to be replaced to provide the necessary district-heating and hot-water capacity. However, because the biomass plant will be on line in 1999 and will provide a portion of the district-heating and hot-water load, the remaining boiler units will operate fewer hours. Using the same hours of life as they would otherwise be expected to operate, the biomass project will extend the operation of the two boiler units to be replaced after 1999 as calculated below:

Current Case Boiler Operations:

Summer - 1 unit (5 months) 30 days/month (24 hr/day) =	3,600 hr
+ 1 unit (5 months) 30 days/month (6 hr/day) =	900 hr
Winter - 3 units (7 months) 30 days/month (24 hr/day) =	15,120 hr
+ 1 unit (7 months) 30 days/month (6 hr/day) =	1,260 hr
Winter Peak - 4 units (7.5 days) 24 hr/day =	720 hr
Total annual operating hours =	21,600 hr

The annual operating hours/boiler would be: 21,600 hr / 4 boilers = 5,400 hr/boiler

Biomass/Electric Case Boiler Operations:

Summer - 1 unit (5 months) 30 days/month (6 hr/day) =	900 hr
+ 1 unit (14 days) 24 hr/day =	336 hr
Winter - 2 units (7 months) 30 days/month (24 hr/day) =	10,080 hr
+ 1 unit (7 months) 30 days/month (6 hr/day) =	1,260 hr
Winter Peak - 3 units (7.5 days) 24 hr/day =	540 hr
Subtotal annual operating hours =	13,116 hr
Additional unscheduled biomass boiler outages	120 hr
Total annual operating hours =	13,236 hr

The annual operating hours/boiler would be: 13,236 hr / 3 boilers = 4,412 hr/boiler.
The reduction in the annual operating hr/boiler is: (5,400 - 4,412) = 988 hr/boiler.
Extending the life of three boilers by 988 hr/yr for 4 yr = 11,856 hr of additional life.
The two boilers to be replaced in 2003 would each receive approximately 1.5 years of additional life.

APPENDIX I

CRITERIA and GREENHOUSE GAS EMISSIONS OFFSETS for RUSSIAN WASTE-BIOMASS-ENERGY PILOT PROJECT

A. WASTE-BIOMASS FUEL

Carbon dioxide emissions are considered to be neutral because the waste biomass used will decompose and produce equal or greater greenhouse gas impacts. Using a similar output of 315 kW at 7,500 hr/yr for biomass as was used for the diesel case below, the emissions of criteria pollutants from the waste-biomass-fueled pilot plant are as follows:

Component	Predicted (lb/MBtu)	Annual Emissions (lb/yr)	Annual Emissions (kg/yr)
NO_x	0.02	3,039	1,378
So_x (high)	0.003	454	206
Particulate	0.30	45,431	20,607
Hydrocarbons	0.007	1,060	481

The greenhouse gas emissions are as follows:

	(lb/MBtu)	(ton/yr)	(tonne/yr)
CO_2	N/A	N/A	N/A

B. DIESEL FUEL

The emissions from the existing diesel generators are currently unknown. The actual emissions data will be collected during the in-country data-gathering trip in the full feasibility study stage. The data shown below are the predicted and/or guaranteed emissions from similarly sized diesel generators currently being marketed in the United States. The emissions of criteria pollutants from a 315-kW diesel using a low-sulfur #2 diesel fuel at maximum load for 7,500 hours per year is as follows:

Component	Predicted (lb/MBtu)	Annual Emissions (lb/yr)	Annual Emissions (kg/yr)	Difference (+/- %)
NO_x	1.24	53,620	24,370	+ 1,769
So_x (low)	0.13	5,621	2,555	+ 1,240
Particulate	0.042	1,816	825	- 96
Hydrocarbons	0.068	3,718	1,690	+351

The greenhouse gas emissions are as follows:

	(lb/MBtu)	(ton/yr)	(tonne/yr)	(tonne/yr)
CO_2	147.68	3,912	3,549	3,549

APPENDIX J

FINANCIAL INTERNAL RATE OF RETURN (FIRR), PRO FORMA, AND ECONOMIC INTERNAL RATE OF RETURN (EIRR) EVALUATIONS for RUSSIAN WASTE BIOMASS ENERGY PILOT PROJECT

A. FINANCIAL INTERNAL RATE of RETURN CALCULATIONS:

Tables 1 and 2 provide the FIRR evaluation for the base 470-kW and alternate 260-kW scenarios, respectively.

B. PRO FORMA ANALYSIS:

Tables 3 and 4 provide the before and after tax net cash flow analysis for the base 470-kW and alternate 260-kW scenarios, respectively.

C. ECONOMIC INTERNAL RATE of RETURN DISCUSSION:

No calculations for EIRR are performed in this analysis. EIRR analyzes the project from the perspective of the country as a whole. The principal benefits to the country are normally environmental emission or discharge reductions and revenues from export of fossil fuels. Because attainment of environmental standards is not a major overriding factor for a village energy project, it is hard to quantify the value of environmental benefits.

Distillate fuel not used in the village can certainly be exported for revenue. The value of this benefit plus any quantified environmental benefits should be assessed and accounted for in the EIRR analysis in the full feasibility study stage.

TABLE 1: Scenario 1:FIRR

FINANCIAL INTERNAL RATE OF RETURN CALCULATION FOR 470-kW BIOMASS ENERGY SYSTEM AT VERKHNI-OZERSKI

Year	1997	1998	1999	2000	2001	2002	2003	2004	2005	2006	2007	2008	2009	2010	2011	2012	2013
Years of Biomass Operations	-1	0	1	2	3	4	5	6	7	8	9	10	11	12	13	14	15
Case A:																	
Biomass with Diesel Backup																	
Biomass Equipment (Ap. F)	$ 583.0	$ 583.0	$ -	$ -	$ -	$ -	$ -	$ -	$ -	$ -	$ -	$ -	$ -	$ -	$ -	$ -	$ -
Dist. Heating Equipment (Ap. H)			$ -	$ -	$ -	$ -	$ -	$ 80.0	$ -	$ 80.0	$ -	$ -	$ -	$ -	$ -	$ -	$ -
Diesel Equipment (Ap. H)			$ (10.0)	$ -	$ -	$ -	$ -	$ 116.0	$ -	$ -	$ -	$ -	$ 116.0	$ -	$ -	$ -	$ -
Biomass O&M (Ap. D)			$ 31.9	$ 31.9	$ 31.9	$ 31.9	$ 31.9	$ 31.9	$ 31.9	$ 31.9	$ 31.9	$ 31.9	$ 31.9	$ 31.9	$ 31.9	$ 31.9	$ 31.9
Dist. Heating O&M (Cal.)			$ 3.7	$ 3.7	$ 3.7	$ 3.7	$ 3.7	$ 3.7	$ 3.7	$ 3.7	$ 3.7	$ 3.7	$ 3.7	$ 3.7	$ 3.7	$ 3.7	$ 3.7
Backup Diesel O&M (Ap. C)			$ 5.6	$ 5.6	$ 5.6	$ 5.6	$ 5.6	$ 5.6	$ 5.6	$ 5.6	$ 5.6	$ 5.6	$ 5.6	$ 5.6	$ 5.6	$ 5.6	$ 5.6
Biomass Fuel (Ap. B)			$ 6.1	$ 6.1	$ 6.1	$ 6.1	$ 6.1	$ 6.1	$ 6.1	$ 6.1	$ 6.1	$ 6.1	$ 6.1	$ 6.1	$ 6.1	$ 6.1	$ 6.1
Dist. Heating Fuel (Cal.)			$ 1.3	$ 1.3	$ 1.3	$ 1.3	$ 1.3	$ 1.3	$ 1.3	$ 1.3	$ 1.3	$ 1.3	$ 1.3	$ 1.3	$ 1.3	$ 1.3	$ 1.3
Backup Diesel Fuel (Ap. A)			$ 26.8	$ 26.8	$ 26.8	$ 26.8	$ 26.8	$ 26.8	$ 26.8	$ 26.8	$ 26.8	$ 26.8	$ 26.8	$ 26.8	$ 26.8	$ 26.8	$ 26.8
Total	**$ 583.0**	**$ 583.0**	**$ 65.4**	**$ 75.4**	**$ 75.4**	**$ 75.4**	**$ 75.4**	**$ 271.4**	**$ 75.4**	**$ 155.4**	**$ 75.4**	**$ 75.4**	**$ 191.4**	**$ 75.4**	**$ 75.4**	**$ 75.4**	**$ 75.4**
Case B:																	
Continuation of Present Operations																	
Dist. Heating Equipment (AP. H)			$ 80.0	$ -	$ 80.0	$ -	$ 80.0	$ -	$ -	$ -	$ -	$ -	$ -	$ -	$ -	$ -	$ -
Diesel Equipment (Ap. H)			$ 116.0	$ -	$ 116.0	$ -	$ 116.0	$ -	$ -	$ -	$ -	$ 116.0	$ -	$ 116.0	$ -	$ 116.0	$ -
Dist. Heating O&M (Cal.)			$ 6.5	$ 6.5	$ 6.5	$ 6.5	$ 6.5	$ 6.5	$ 6.5	$ 6.5	$ 6.5	$ 6.5	$ 6.5	$ 6.5	$ 6.5	$ 6.5	$ 6.5
Diesel O&M (Ap. C)			$ 42.0	$ 42.0	$ 42.0	$ 42.0	$ 42.0	$ 42.0	$ 42.0	$ 42.0	$ 42.0	$ 42.0	$ 42.0	$ 42.0	$ 42.0	$ 42.0	$ 42.0
Dist. Heating Fuel (Cal.)			$ 2.3	$ 2.3	$ 2.3	$ 2.3	$ 2.3	$ 2.3	$ 2.3	$ 2.3	$ 2.3	$ 2.3	$ 2.3	$ 2.3	$ 2.3	$ 2.3	$ 2.3
Diesel Fuel (Ap. A)			$ 206.3	$ 206.3	$ 206.3	$ 206.3	$ 206.3	$ 206.3	$ 206.3	$ 206.3	$ 206.3	$ 206.3	$ 206.3	$ 206.3	$ 206.3	$ 206.3	$ 206.3
Total			**$ 453.0**	**$ 257.0**	**$ 453.0**	**$ 257.0**	**$ 453.0**	**$ 257.0**	**$ 257.0**	**$ 257.0**	**$ 257.0**	**$ 373.0**	**$ 257.0**	**$ 373.0**	**$ 257.0**	**$ 373.0**	**$ 257.0**
Net Savings with Biomass	**$ (583.0)**	**$ (583.0)**	**$ 387.6**	**$ 181.6**	**$ 377.6**	**$ 181.6**	**$ 377.6**	**$ (14.4)**	**$ 181.6**	**$ 101.6**	**$ 181.6**	**$ 297.6**	**$ 65.6**	**$ 297.6**	**$ 181.6**	**$ 297.6**	**$ 181.6**

Net Present Value at 10% Discount Rate	$ 443.9	
Net Present Value at 15% Discount Rate	$ 109.7	
Net Present Value at 17.44 % Discount Rate	**$ 0.0**	(FIRR)
Net Present Value at 18% Discount Rate	$ (21.4)	
Net Present Value at 20% Discount Rate	$ (89.3)	

Notes:

1. All cost data are in 1,000 U.S. dollars (1997).
2. The life expectancy of biomass equipment is conservatively assumed to be 15 years.
3. If the life expectancy of biomass equipment is reduced to 10 years, then the FIRR = 14.6%
4. Ap. stands for Appendix where values were calculated.
5. Cal. stands for calculated values which are not shown in the Appendices.
6. Inflation is not accounted for in this analysis.

TABLE 2: Scenario 2:FIRR

FINANCIAL INTERNAL RATE OF RETURN CALCULATION FOR 260-kW BIOMASS ENERGY SYSTEM AT VERKHNI-OZERSKI

Year	1997	1998	1999	2000	2001	2002	2003	2004	2005	2006	2007	2008	2009	2010	2011	2012	2013
Years of Biomass Operations	-1	0	1	2	3	4	5	6	7	8	9	10	11	12	13	14	15
Case A:																	
Biomass with Diesel Backup																	
Biomass Equipment (Ap. F)	$ 489.0	$ 489.0	$ -	$ -	$ -	$ -	$ -	$ -	$ -	$ -	$ -	$ -	$ -	$ -	$ -	$ -	$ -
Dist. Heating Equipment (Ap. H)			$ -	$ -	$ -	$ -	$ -	$ 80.0	$ -	$ 80.0	$ -	$ -	$ -	$ -	$ -	$ -	$ -
Diesel Equipment (Ap. H)			$ (10.0)	$ -	$ -	$ -	$ 116.0	$ -	$ -	$ -	$ 116.0	$ -	$ -	$ -	$ 116.0	$ -	$ -
Biomass O&M (Ap. D)			$ 22.1	$ 22.1	$ 22.1	$ 22.1	$ 22.1	$ 22.1	$ 22.1	$ 22.1	$ 22.1	$ 22.1	$ 22.1	$ 22.1	$ 22.1	$ 22.1	$ 22.1
Dist. Heating O&M (Cal.)			$ 4.4	$ 4.4	$ 4.4	$ 4.4	$ 4.4	$ 4.4	$ 4.4	$ 4.4	$ 4.4	$ 4.4	$ 4.4	$ 4.4	$ 4.4	$ 4.4	$ 4.4
Backup Diesel O&M (Ap. C)			$ 19.8	$ 19.8	$ 19.8	$ 19.8	$ 19.8	$ 19.8	$ 19.8	$ 19.8	$ 19.8	$ 19.8	$ 19.8	$ 19.8	$ 19.8	$ 19.8	$ 19.8
Biomass Fuel (Ap. B)			$ 5.0	$ 5.0	$ 5.0	$ 5.0	$ 5.0	$ 5.0	$ 5.0	$ 5.0	$ 5.0	$ 5.0	$ 5.0	$ 5.0	$ 5.0	$ 5.0	$ 5.0
Dist. Heating Fuel (Cal.)			$ 1.6	$ 1.6	$ 1.6	$ 1.6	$ 1.6	$ 1.6	$ 1.6	$ 1.6	$ 1.6	$ 1.6	$ 1.6	$ 1.6	$ 1.6	$ 1.6	$ 1.6
Backup Diesel Fuel (Ap. A)			$ 59.7	$ 59.7	$ 59.7	$ 59.7	$ 59.7	$ 59.7	$ 59.7	$ 59.7	$ 59.7	$ 59.7	$ 59.7	$ 59.7	$ 59.7	$ 59.7	$ 59.7
Total	**$ 489.0**	**$ 489.0**	**$ 102.7**	**$ 112.7**	**$ 112.7**	**$ 112.7**	**$ 228.7**	**$ 192.7**	**$ 112.7**	**$ 192.7**	**$ 228.7**	**$ 112.7**	**$ 112.7**	**$ 112.7**	**$ 228.7**	**$ 112.7**	**$ 112.7**
Case B:																	
Continuation of Present Operations																	
Dist. Heating Equipment (AP. H)			$ 80.0	$ -	$ 80.0	$ -	$ 80.0	$ -	$ -	$ -	$ -	$ -	$ -	$ -	$ -	$ -	$ -
Diesel Equipment (Ap. H)			$ 116.0	$ -	$ 116.0	$ -	$ 116.0	$ -	$ -	$ -	$ -	$ 116.0	$ -	$ 116.0	$ -	$ 116.0	$ -
Dist. Heating O&M (Cal.)			$ 6.5	$ 6.5	$ 6.5	$ 6.5	$ 6.5	$ 6.5	$ 6.5	$ 6.5	$ 6.5	$ 6.5	$ 6.5	$ 6.5	$ 6.5	$ 6.5	$ 6.5
Diesel O&M (Ap. C)			$ 42.0	$ 42.0	$ 42.0	$ 42.0	$ 42.0	$ 42.0	$ 42.0	$ 42.0	$ 42.0	$ 42.0	$ 42.0	$ 42.0	$ 42.0	$ 42.0	$ 42.0
Dist. Heating Fuel (Cal.)			$ 2.3	$ 2.3	$ 2.3	$ 2.3	$ 2.3	$ 2.3	$ 2.3	$ 2.3	$ 2.3	$ 2.3	$ 2.3	$ 2.3	$ 2.3	$ 2.3	$ 2.3
Diesel Fuel (Ap. A)			$ 206.3	$ 206.3	$ 206.3	$ 206.3	$ 206.3	$ 206.3	$ 206.3	$ 206.3	$ 206.3	$ 206.3	$ 206.3	$ 206.3	$ 206.3	$ 206.3	$ 206.3
Total			**$ 453.0**	**$ 257.0**	**$ 453.0**	**$ 257.0**	**$ 453.0**	**$ 257.0**	**$ 257.0**	**$ 257.0**	**$ 257.0**	**$ 373.0**	**$ 257.0**	**$ 373.0**	**$ 257.0**	**$ 373.0**	**$ 257.0**
Net Savings with Biomass	**$ (489.0)**	**$ (489.0)**	**$ 350.4**	**$ 144.4**	**$ 340.4**	**$ 144.4**	**$ 224.4**	**$ 64.4**	**$ 144.4**	**$ 64.4**	**$ 28.4**	**$ 260.4**	**$ 144.4**	**$ 260.4**	**$ 28.4**	**$ 260.4**	**$ 144.4**

Net Present Value at 10% Discount Rate	$ 332.6	
Net Present Value at 15% Discount Rate	$ 71.7	
Net Present at 17.00 % Discount Rate	**$ 0.0**	(FIRR)
Net Present Value at 18% Discount Rate	$ (31.0)	
Net Present Value at 20% Discount Rate	$ (84.3)	

Notes:

1. All cost data are in 1,000 U.S. dollars (1997).
2. The life expectancy of biomass equipment is conservatively assumed to be 15 years.
3. If the life expectancy of biomass equipment is reduced to 10 years, then the FIRR = 13.8%
4. Ap. stands for Appendix where values were calculated.
5. Cal. Stands for calculated values which are not shown in the Appendices.
6. Inflation is not accounted for in this analysis.

TABLE 3: Scenario 1: Net Cash Flow for 15-Year Project Horizon and 10% Real Loan Interest

NET CASH FLOW CALCULATION FOR 470-kW BIOMASS ENERGY SYSTEM AT VERKHNI-OZERSKI

Year	1997	1998	1999	2000	2001	2002	2003	2004	2005	2006	2007	2008	2009	2010	2011	2012	2013
Years of Biomass Operations	-1	0	1	2	3	4	5	6	7	8	9	10	11	12	13	14	15
Case A:																	
Biomass with Diesel Backup																	
Biomass Equipment (Ap. F)	$ 145.8	$ 145.8	$ 131.4	$ 127.5	$ 123.6	$ 119.9	$ 116.3	$ 112.8	$ 109.5	$ 106.2	$ 103.0	$ 99.9	$ 96.9	$ 94.0	$ 91.2	$ 88.4	$ 85.8
Dist. Heating Equipment (Ap. H)			$ -	$ -	$ -	$ -	$ -	$ 80.0	$ -	$ 80.0	$ -	$ -	$ -	$ -	$ -	$ -	$ -
Diesel Equipment (Ap. H)			$ (10.0)	$ -	$ -	$ -	$ -	$ 116.0	$ -	$ -	$ -	$ -	$ 116.0	$ -	$ -	$ -	$ -
Biomass O&M (Ap. D)			$ 31.9	$ 31.9	$ 31.9	$ 31.9	$ 31.9	$ 31.9	$ 31.9	$ 31.9	$ 31.9	$ 31.9	$ 31.9	$ 31.9	$ 31.9	$ 31.9	$ 31.9
Dist. Heating O&M (Cal.)			$ 3.7	$ 3.7	$ 3.7	$ 3.7	$ 3.7	$ 3.7	$ 3.7	$ 3.7	$ 3.7	$ 3.7	$ 3.7	$ 3.7	$ 3.7	$ 3.7	$ 3.7
Backup Diesel O&M (Ap. C)			$ 5.6	$ 5.6	$ 5.6	$ 5.6	$ 5.6	$ 5.6	$ 5.6	$ 5.6	$ 5.6	$ 5.6	$ 5.6	$ 5.6	$ 5.6	$ 5.6	$ 5.6
Biomass Fuel (Ap. B)			$ 6.1	$ 6.1	$ 6.1	$ 6.1	$ 6.1	$ 6.1	$ 6.1	$ 6.1	$ 6.1	$ 6.1	$ 6.1	$ 6.1	$ 6.1	$ 6.1	$ 6.1
Dist. Heating Fuel (Cal.)			$ 1.3	$ 1.3	$ 1.3	$ 1.3	$ 1.3	$ 1.3	$ 1.3	$ 1.3	$ 1.3	$ 1.3	$ 1.3	$ 1.3	$ 1.3	$ 1.3	$ 1.3
Backup Diesel Fuel (Ap. A)			$ 26.8	$ 26.8	$ 26.8	$ 26.8	$ 26.8	$ 26.8	$ 26.8	$ 26.8	$ 26.8	$ 26.8	$ 26.8	$ 26.8	$ 26.8	$ 26.8	$ 26.8
Total	**$ 145.8**	**$ 145.8**	**$ 196.8**	**$ 202.9**	**$ 199.1**	**$ 195.3**	**$ 191.7**	**$ 384.3**	**$ 184.9**	**$ 261.6**	**$ 178.4**	**$ 175.3**	**$ 288.3**	**$ 169.4**	**$ 166.6**	**$ 163.9**	**$ 161.2**
Case B:																	
Continuation of Present Operations																	
Dist. Heating Equipment (AP. H)			$ 80.0	$ -	$ 80.0	$ -	$ 80.0	$ -	$ -	$ -	$ -	$ -	$ -	$ -	$ -	$ -	$ -
Diesel Equipment (Ap. H)			$ 116.0	$ -	$ 116.0	$ -	$ 116.0	$ -	$ -	$ -	$ -	$ 116.0	$ -	$ 116.0	$ -	$ 116.0	$ -
Dist. Heating O&M (Cal.)			$ 6.5	$ 6.5	$ 6.5	$ 6.5	$ 6.5	$ 6.5	$ 6.5	$ 6.5	$ 6.5	$ 6.5	$ 6.5	$ 6.5	$ 6.5	$ 6.5	$ 6.5
Diesel O&M (Ap. C)			$ 42.0	$ 42.0	$ 42.0	$ 42.0	$ 42.0	$ 42.0	$ 42.0	$ 42.0	$ 42.0	$ 42.0	$ 42.0	$ 42.0	$ 42.0	$ 42.0	$ 42.0
Dist. Heating Fuel (Cal.)			$ 2.3	$ 2.3	$ 2.3	$ 2.3	$ 2.3	$ 2.3	$ 2.3	$ 2.3	$ 2.3	$ 2.3	$ 2.3	$ 2.3	$ 2.3	$ 2.3	$ 2.3
Diesel Fuel (Ap. A)			$ 206.3	$ 206.3	$ 206.3	$ 206.3	$ 206.3	$ 206.3	$ 206.3	$ 206.3	$ 206.3	$ 206.3	$ 206.3	$ 206.3	$ 206.3	$ 206.3	$ 206.3
Total			**$ 453.0**	**$ 257.0**	**$ 453.0**	**$ 257.0**	**$ 453.0**	**$ 257.0**	**$ 257.0**	**$ 257.0**	**$ 257.0**	**$ 373.0**	**$ 257.0**	**$ 373.0**	**$ 257.0**	**$ 373.0**	**$ 257.0**
Net Cash Flow with Biomass	**$ (145.8)**	**$ (145.8)**	**$ 256.2**	**$ 54.2**	**$ 254.0**	**$ 61.7**	**$ 261.3**	**$ (127.2)**	**$ 72.2**	**$ (4.5)**	**$ 78.6**	**$ 197.7**	**$ (31.3)**	**$ 203.6**	**$ 90.5**	**$ 209.2**	**$ 95.8**
Assume St.-Line 10-Yr. Depr.			$ (87.6)	$ (87.6)	$ (87.6)	$ (87.6)	$ (87.6)	$ (87.6)	$ (87.6)	$ (87.6)	$ (87.6)	$ (87.6)	$ -	$ -	$ -	$ -	$ -
Taxable Income from Savings			$ 168.7	$ (33.4)	$ 166.4	$ (25.8)	$ 173.7	$ (214.8)	$ (15.4)	$ (92.1)	$ (8.9)	$ 110.2	$ (31.3)	$ 203.6	$ 90.5	$ 209.2	$ 95.8
Assume 40% Tax Rate			$ (67.5)	$ 13.4	$ (66.6)	$ 10.3	$ (69.5)	$ 85.9	$ 6.1	$ 36.8	$ 3.6	$ (44.1)	$ 12.5	$ (81.5)	$ (36.2)	$ (83.7)	$ (38.3)
Net Income After Taxes	**$ (145.8)**	**$ (145.8)**	**$ 188.8**	**$ 67.5**	**$ 187.4**	**$ 72.0**	**$ 191.8**	**$ (41.3)**	**$ 78.3**	**$ 32.3**	**$ 82.2**	**$ 153.7**	**$ (18.8)**	**$ 122.2**	**$ 54.3**	**$ 125.5**	**$ 57.5**

Notes:

1. All cost data are in 1,000 U.S. dollars (1997).
2. The life expectancy of biomass equipment is conservatively assumed to be 15 years.
3. 75% of biomass equipment cost is financed by a 13% nominal interest rate loan over 15 years. Invested equity is 25%.
4. No financing is assumed to be available for diesel engines and district-heating equipment.
5. Ap. stands for Appendix where values were calculated.
6. Cal. stands for calculated values which are not shown in the Appendices.
7. No differential inflation has been accounted for in this analysis with the exception of including the devaluation impact of a 3% annual inflation rate on constant-dollar debt service cost.
8. In the absence of accurate data, it is conservatively assumed that the marginal tax rate for the enterprise is 40% and biomass equipment can be depreciated over 10 years on a straight-line basis.
9. Internal rate of return on equity investment from savings (before taxes) = 43.2%
10. Internal rate of return on equity investment from savings (after taxes) = 35.0%

TABLE 4: Scenario 2: Net Cash Flow for 15-Year Project Horizon and 10% Real Loan Interest

NET CASH FLOW CALCULATION FOR 260 kW BIOMASS ENERGY SYSTEM AT VERKHNI-OZERSKI

Year	1997	1998	1999	2000	2001	2002	2003	2004	2005	2006	2007	2008	2009	2010	2011	2012	2013
Years of Biomass Operations	-1	0	1	2	3	4	5	6	7	8	9	10	11	12	13	14	15
Case A:																	
Biomass with Diesel Backup																	
Biomass Equipment (Ap. F)	$ 122.3	$ 122.3	$ 110.1	$ 106.8	$ 103.6	$ 100.5	$ 97.5	$ 94.5	$ 91.7	$ 89.0	$ 86.3	$ 83.7	$ 81.2	$ 78.8	$ 76.4	$ 74.1	$ 71.9
Dist. Heating Equipment (Ap. H)			$ -	$ -	$ -	$ -	$ -	$ 80.0	$ -	$ 80.0	$ -	$ -	$ -	$ -	$ -	$ -	$ -
Diesel Equipment (Ap. H)			$ (10.0)	$ -	$ -	$ -	$ 116.0	$ -	$ -	$ -	$ 116.0	$ -	$ -	$ -	$ 116.0	$ -	$ -
Biomass O&M (Ap. D)			$ 22.1	$ 22.1	$ 22.1	$ 22.1	$ 22.1	$ 22.1	$ 22.1	$ 22.1	$ 22.1	$ 22.1	$ 22.1	$ 22.1	$ 22.1	$ 22.1	$ 22.1
Dist. Heating O&M (Cal.)			$ 4.4	$ 4.4	$ 4.4	$ 4.4	$ 4.4	$ 4.4	$ 4.4	$ 4.4	$ 4.4	$ 4.4	$ 4.4	$ 4.4	$ 4.4	$ 4.4	$ 4.4
Backup Diesel O&M (Ap. C)			$ 19.8	$ 19.8	$ 19.8	$ 19.8	$ 19.8	$ 19.8	$ 19.8	$ 19.8	$ 19.8	$ 19.8	$ 19.8	$ 19.8	$ 19.8	$ 19.8	$ 19.8
Biomass Fuel (Ap. B)			$ 5.0	$ 5.0	$ 5.0	$ 5.0	$ 5.0	$ 5.0	$ 5.0	$ 5.0	$ 5.0	$ 5.0	$ 5.0	$ 5.0	$ 5.0	$ 5.0	$ 5.0
Dist. Heating Fuel (Cal.)			$ 1.6	$ 1.6	$ 1.6	$ 1.6	$ 1.6	$ 1.6	$ 1.6	$ 1.6	$ 1.6	$ 1.6	$ 1.6	$ 1.6	$ 1.6	$ 1.6	$ 1.6
Backup Diesel Fuel (Ap. A)			$ 59.7	$ 59.7	$ 59.7	$ 59.7	$ 59.7	$ 59.7	$ 59.7	$ 59.7	$ 59.7	$ 59.7	$ 59.7	$ 59.7	$ 59.7	$ 59.7	$ 59.7
Total	**$ 122.3**	**$ 122.3**	**$ 212.8**	**$ 219.5**	**$ 216.3**	**$ 213.1**	**$ 326.1**	**$ 287.2**	**$ 204.4**	**$ 281.6**	**$ 315.0**	**$ 196.4**	**$ 193.9**	**$ 191.4**	**$ 305.1**	**$ 186.8**	**$ 184.5**
Case B:																	
Continuation of Present Operations																	
Dist. Heating Equipment (AP. H)			$ 80.0	$ -	$ 80.0	$ -	$ 80.0	$ -	$ -	$ -	$ -	$ -	$ -	$ -	$ -	$ -	$ -
Diesel Equipment (Ap. H)			$ 116.0	$ -	$ 116.0	$ -	$ 116.0	$ -	$ -	$ -	$ -	$ 116.0	$ -	$ 116.0	$ -	$ 116.0	$ -
Dist. Heating O&M (Cal.)			$ 6.5	$ 6.5	$ 6.5	$ 6.5	$ 6.5	$ 6.5	$ 6.5	$ 6.5	$ 6.5	$ 6.5	$ 6.5	$ 6.5	$ 6.5	$ 6.5	$ 6.5
Diesel O&M (Ap. C)			$ 42.0	$ 42.0	$ 42.0	$ 42.0	$ 42.0	$ 42.0	$ 42.0	$ 42.0	$ 42.0	$ 42.0	$ 42.0	$ 42.0	$ 42.0	$ 42.0	$ 42.0
Dist. Heating Fuel (Cal.)			$ 2.3	$ 2.3	$ 2.3	$ 2.3	$ 2.3	$ 2.3	$ 2.3	$ 2.3	$ 2.3	$ 2.3	$ 2.3	$ 2.3	$ 2.3	$ 2.3	$ 2.3
Diesel Fuel (Ap. A)			$ 206.3	$ 206.3	$ 206.3	$ 206.3	$ 206.3	$ 206.3	$ 206.3	$ 206.3	$ 206.3	$ 206.3	$ 206.3	$ 206.3	$ 206.3	$ 206.3	$ 206.3
Total			**$ 453.0**	**$ 257.0**	**$ 453.0**	**$ 257.0**	**$ 453.0**	**$ 257.0**	**$ 257.0**	**$ 257.0**	**$ 257.0**	**$ 373.0**	**$ 257.0**	**$ 373.0**	**$ 257.0**	**$ 373.0**	**$ 257.0**
Net Cash Flow with Biomass	**$ (122.3)**	**$ (122.3)**	**$ 240.3**	**$ 37.6**	**$ 236.8**	**$ 43.9**	**$ 126.9**	**$ (30.2)**	**$ 52.7**	**$ (24.6)**	**$ (57.9)**	**$ 176.7**	**$ 63.2**	**$ 181.6**	**$ (48.0)**	**$ 186.3**	**$ 72.5**
Assume-St.-Line 10-Yr. Depr.			$ (73.4)	$ (73.4)	$ (73.4)	$ (73.4)	$ (73.4)	$ (73.4)	$ (73.4)	$ (73.4)	$ (73.4)	$ (73.4)	$ -	$ -	$ -	$ -	$ -
Taxable Income from Savings			$ 166.9	$ (35.8)	$ 163.4	$ (29.5)	$ 53.6	$ (103.5)	$ (20.7)	$ (97.9)	$ (131.3)	$ 103.3	$ 63.2	$ 181.6	$ (48.0)	$ 186.3	$ 72.5
Assume 40% Tax Rate			$ (66.8)	$ 14.3	$ (65.4)	$ 11.8	$ (21.4)	$ 41.4	$ 8.3	$ 39.2	$ 52.5	$ (41.3)	$ (25.3)	$ (72.7)	$ 19.2	$ (74.5)	$ (29.0)
Net Income After Taxes	**$ (122.3)**	**$ (122.3)**	**$ 173.5**	**$ 51.9**	**$ 171.4**	**$ 55.7**	**$ 105.5**	**$ 11.2**	**$ 60.9**	**$ 14.6**	**$ (5.4)**	**$ 135.3**	**$ 37.9**	**$ 109.0**	**$ (28.8)**	**$ 111.8**	**$ 43.5**

Notes:

1. All cost data are in 1,000 U.S. dollars (1997).
2. The life expectancy of biomass equipment is conservatively assumed to be 15 years.
3. 75% of biomass equipment cost is financed by a 13% nominal interest rate loan over 15 years. Invested equity is 25%.
4. No financing is assumed to be available for diesel engines and district- heating equipment.
5. Ap. stands for Appendix where values were calculated.
6. Cal. stands for calculated values which are not shown in the Appendices.
7. No differential inflation has been accounted for in this analysis with the exception of including the devaluation impact of a 3% annual inflation rate on constant-dollar debt service cost.
8. In the absence of accurate data, it is conservatively assumed that the marginal tax rate for the enterprise is 40% and biomass equipment can be depreciated over 10 years on a straight-line basis.
9. Internal rate of return on equity investment from savings (before taxes) = 44.5%
10. Internal rate of return on equity investment from savings (after taxes) = 35.4%

APPENDIX K

MINI-GRID EVALUATION
for
RUSSIAN WASTE BIOMASS ENERGY PILOT PROJECT

A. MINI-GRID COSTS

The incremental additional costs of constructing a mini-grid to serve the nearby fishing villages of Purnema, Liamtsa, Una, and Luda are as follows:

1. The cost of the additional waste-biomass-fueled power generation capacity required to meet the load demands of the interconnected villages.

2. The cost of the construction of the interconnecting power lines and associated poles, switchyards, and power line facilities.

One 470-kW net waste-biomass-fueled power generation module at Verkhni-Ozerski displaces 87% of distillate fuel used in that village. Adding a second 470-kW module at Verkhni-Ozerski to serve the mini-grid would displace a higher percentage of min-grid's fuel because of lower unscheduled downtime of both modules and higher availability of the combined system. We will assume that the combined system will serve approximately 90% of the load of the entire mini-grid, and would increase the amount of district-heating capacity at Verkhni-Ozerski by a factor of at least two. The existing diesel generation infrastructure at each of the other villages would provide excellent backup, peaking, and emergency capacity. The operation of the waste-biomass-fueled equipment would increase the life of the existing diesel generation equipment in direct proportion to the load factor of the waste biomass operations.

The analysis for the 940-kW single-module scenario was deliberately excluded here because of many practical uncertainties. The additional waste-biomass-fueled capacity could either be installed at the same time as the proposed initial 470-kW modular plant as an "Integrated" project or at a later time as a pre-engineered "phased" project. The cost of the interconnection facilities would not vary appreciably whether completed as an integrated or as a phased project. The costs shown below were derived from the cost estimates set forth in Appendix F and the cost estimates provided by the Russian Ministry of Fuel and Energy as set forth in Mr. Bezrukikh's letter to Ecotrade, Inc., included in Attachment 4.

Mini-grid Cost Summary	Integrated ($ 000)	Phased ($ 000)
Additional Power Generation Module	$ 661	$ 856
Interconnecting Lines and Equipment	$ 678	$ 678
Total Cost of Mini-grid	**$1,339**	**$1,534**

B. MINI-GRID TOTAL ANNUAL SAVINGS

In the absence of accurate data, it is estimated that a second 470-kW net waste-biomass-fueled power-generating system would offset diesel fuel consumption and diesel generation operating costs in proportion to the population of the interconnected villages with respect to the population of Verkhni-Ozerski. The population of Verkhni-Ozerski is 640. The populations of the villages to be connected to the proposed mini-grid are as follows:

Village Name	Population
Purnema	300
Liamsta	170
Una	200
Luda	200
Total Grid Connected	**870**

Annual fuel cost savings derived from base scenario waste-biomass power production can be derived from data set forth in Appendices A, B, C and D as follows:

Present cost of diesel-fueled power from Appendix A:	$206,265
Less the cost of backup diesel fuel required with biomass operations:	- $ 26,773
Less the cost of biomass fuel from Appendix B :	- $ 6,139
Subtotal Net Fuel Cost Savings:	**$173,353**

Annual operating cost savings can be derived as follows:

Current operating costs for diesel O & M from Appendix C:	$41,983
Less the cost of backup diesel O & M with biomass operations:	- $ 5,598
Less the cost of biomass O & M from Appendix D:	- $31,900
Subtotal Net O & M Cost Savings:	**$ 4,485**
Total savings in diesel fuel plus operating costs:	**$177,838**

The proportional net incremental savings provided from the installation of the proposed additional capacity and mini-grid interconnection can be crudely estimated as follows:

$177,838/yr (870 / 640) = **$241,750/yr**

C. MINI-GRID ANNUAL NET CASH FLOW

A detailed Financial Rate of Return Analysis is not performed here because there are too many uncertainties associated with the underlying assumptions. All the savings from life extension of diesel engines and district-heating equipment are also conservatively ignored here. Instead, a crude analysis is performed demonstrating the annual net cash flow of biomass energy application for the mini-grid. Using a loan period of 15 years at 10% annual interest and an initial downpayment equity investment of 25% of the total installed cost, the net annual cash flow can be determined for the integrated and phased projects as follows:

Mini-grid Financing Summary	Integrated ($ 000)	Phased ($ 000)
Total Installed Cost	$1,339	$1,534
Downpayment Investment (25%)	- $ 335	- $ 384
Total Financed @10%, and 15 yrs	$1,004	$1,150
Annual Loan Payment	**$ 132**	**$ 151**

The net annual cash flow derived from the implementation of either of the proposed project agendas can now be calculated by subtracting the annual loan payments from the annual diesel fuel and operating cost savings as follows:

Integrated: $241,750/yr - $132,000/yr = **$109,700/yr**
Phased: $241,750/yr - $151,000/yr = **$ 90,500/yr**

D. MINI-GRID PRETAX INTERNAL RATE OF RETURN ON EQUITY INVESTMENT

Using the above investment and annual net cash flow results, the crude before-tax Internal Rate of Return (IRR) calculations on equity investment can be easily completed for the integrated and phased projects as follows:

Integrated:

$109,700/yr pretax net cash flow for 15 years over equity investment of $335,000 yields:

IRR = 32.3%

Phased:

$90,500/yr pretax net cash flow for 15 years over equity investment of $384,000 yields:

IRR = 22.4%

ATTACHMENT 1

Maps of Arkhangelsk Region

Arkhangelsk Oblast

Scale 1:400,000

Pechora
Naryan-Mar
20
20
Mezen
11
Mezen R.
11
16
Arkhangelsk
10
Leshukonskoye
10
Severodvinsk
Novodvinsk
Onega
16
Kholmogory
Karpogory
18
14
Pinega
13
Onega
Berezniki
Plesetsk
4
15
15
2
Nyandoma
19
Verkhnaya Toyma
9
Yarensk
Kargopol
Shenkursk
12
Krasnoborsk
8
Sobyanchegorsk
7
Kotlas
5
1
Oktyabrskiy
17
3
Konosha
Kotlas
6
Velsk
Ilynsko-Podomskoye

LEGEND

- Rivers
- Railways
- Highways
- Towns
- Rayon Boundaries

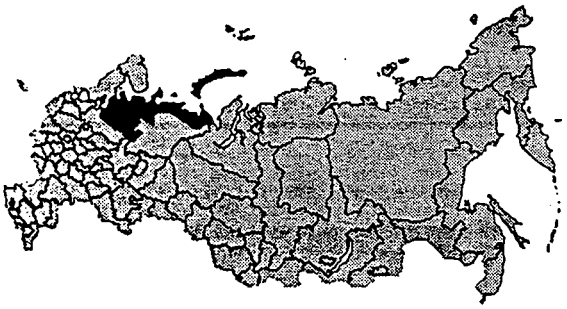

Rayons

1 Velskiy
2 Verkhnetoyemskiy
3 Vilegodskiy
4 Vinogradovskiy
5 Kargopolskiy
6 Konoshskiy
7 Kotlasskiy
8 Krasnoborskiy
9 Lenskiy
10 Leshukonskiy
11 Mezenskiy
12 Nyandomskiy
13 Onezhskiy
14 Pinezhskiy
15 Plesetskiy
16 Primorskiy
17 Ustyanskiy
18 Kholmogorskiy
19 Shenkurskiy
20 Solovetskiy

Copyright 1994 Territorial Development and The International Center

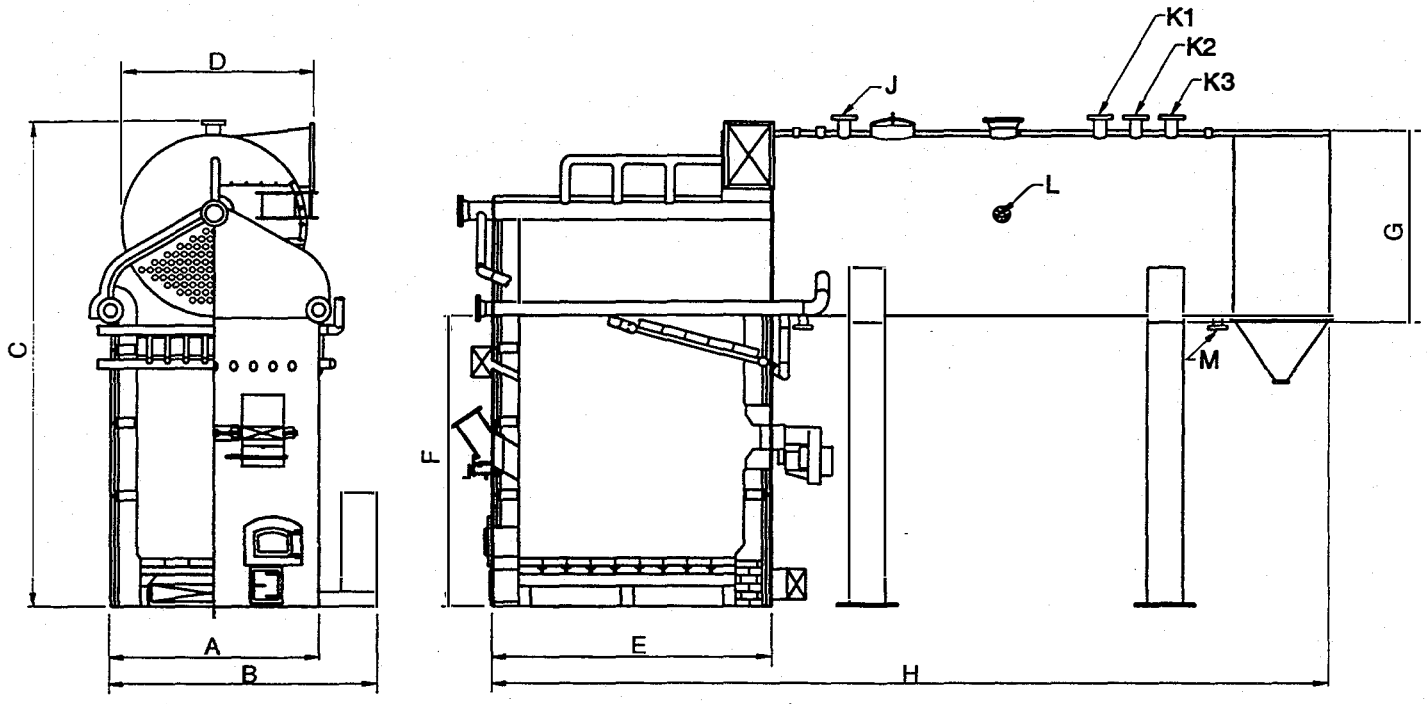

TECHNICAL DATA

Boiler Rating BHP	300	350	400	500	600	700	800	900	1000	1200
Steam Capacity (lb/hr F & A 212°F)	10,350	20,075	13,800	17,250	20,700	24,150	27,600	31,050	34,500	41,400
Fuel Burned (50% MC lb/hr)	3,680	4,293	4,907	6,747	7,359	8,586	9,813	11,040	12,266	14,729
DIMENSIONS										
A. Furnace Width	95 1/2	95 1/2	107 1/2	107 1/2	121	119 1/2	132	132	144	156
B. Overall Width	120	120	132	132	144	144	156	156	168	180
C. Overall Height	208	220	224	245	246	224	228	228	236	244
D. Boiler Diameter	7'-4"	7'-8"	8'-0"	8'-6"	8'-9"	9'-6"	9'-8"	10'-2"	10'-8"	11'-6"
E. Base Length	8'-3"	9'-3"	10'-3"	11'-3"	12'-11"	14'-9"	15'-3"	15'-9"	16'-3"	17'-3"
F. Furnace Module Height	11'-4"	10'-8"	10'-0"	11'-4"	10'-10"	11'-4"	10'-10"	11'-0"	11'-4"	11'-6"
G. Boiler Module Height	8'-4"	8'-5"	8'-5"	8'-7"	9'-8"	10'-0"	9'-11"	10'-0"	10'-0"	11'-0"
H. Overall Length	365	426	410	410	428	448	460	518	482	518
J. Steam Outlet	4"	4"	4"	6"	6"	6"	6"	8"	8"	8"
K1. Relief Valve Opening	2.5"	3"	2.5"	3"	3"	3"	4"	4"	6"	6"
K2. Relief Valve Opening	3"	3"	2.5"	3"	3"	4"	4"	6"	6"	6"
K3. Relief Valve Opening	N/A	N/A	3"	3"	4"	4"	4"	N/A	N/A	N/A
L. Feedwater Connection	2.0"	2.0"	2.5"	2.5"	2.5"	2.5"	2.5"	2.5"	2.5"	2.5"
M. Blowdown Connection	2.0"	2.0"	2.0"	2.0"	2.5"	2.5"	2.5"	2.5"	2.5"	2.5"

Notes:
1. Fuel consumption is based on 50% moisture content and an as fired heating value of 4000 Btu/lb.
2. Standard design pressure is 175 psig. Higher pressures are available.
3. All dimensions are approximate. Actual dimensions are subject to change depending on fuel and emissions requirements.

McBurney

4274-A Shackleford Road
Norcross, Georgia 30093 USA
P.O. Box 1827 - Norcross, Georgia 30091 USA
Phone: 770/925-7100 - Fax: 770/925-7400

ATTACHMENT 2

Sample Vendor Information for Biomass-to-Energy Equipment

MODUL-PAK II® - Model WWF Spreader Stoker - Wet Wood Fuel

Plot Plan:
Range: 100-1200 HP; 3,450 lb/hr to 41,400 lb/hr
Fuel: Wet Wood Fuel with Moisture Content 30% - 50%

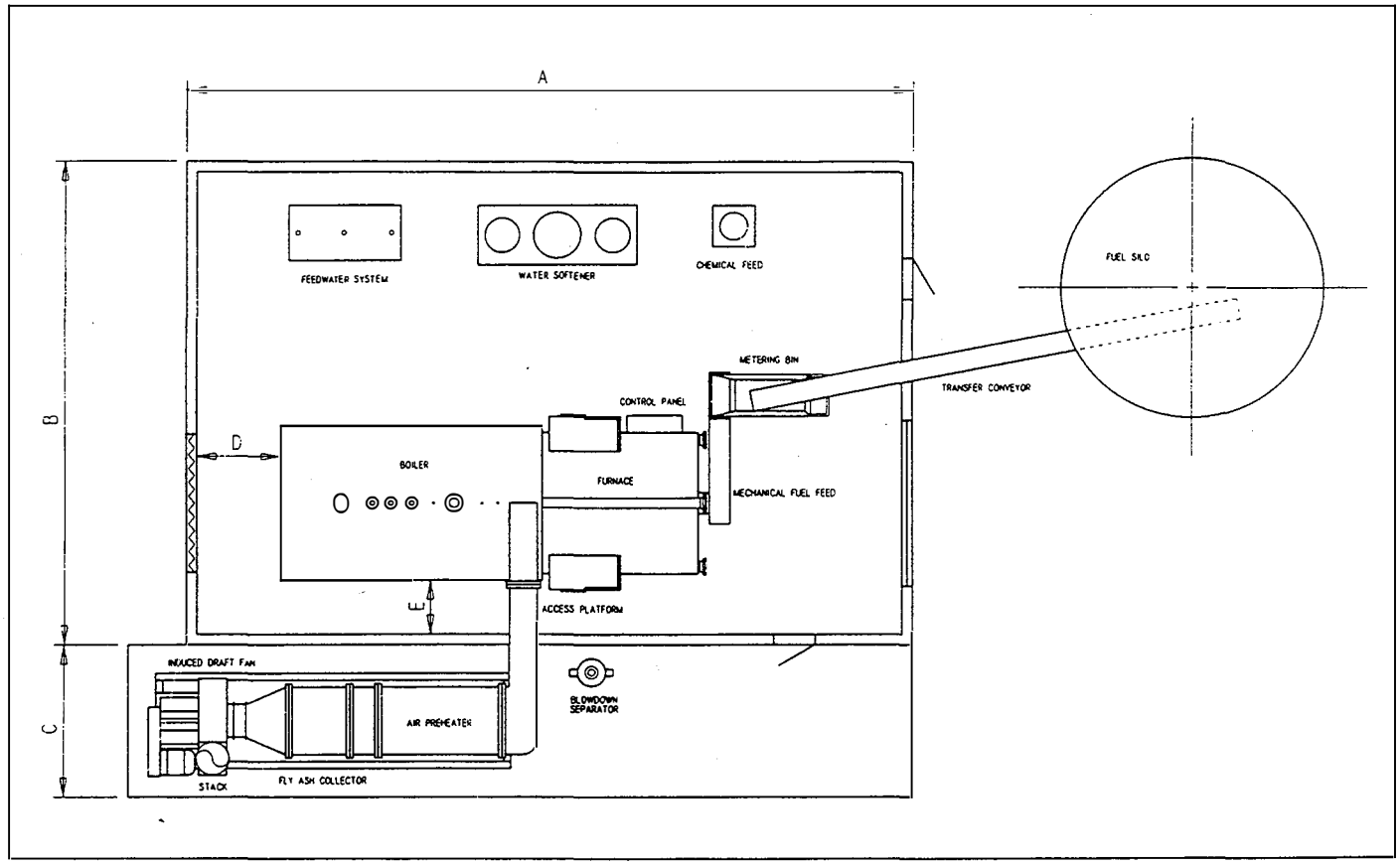

Dimensions For Plot Plan (All Dimensions In Feet) Wet Waste System

Capacity BHP	100	150	200	250	300	350	400	500	600	700	800	900	1000	1200
A. Building Length	40	40	40	45	45	45	50	50	55	60	60	60	60	65
B. Building Width	25	25	25	25	25	25	30	30	35	35	35	35	35	40
C. Exterior Pad Width	10	10	10	10	10	10	10	12	12	12	15	15	17	20
D. Clearance	6	6	6	6	6	6	6	6	6	6	6	6	6	6
E. Clearance	5	5	5	5	5	5	5	5	5	5	5	5	5	5
F. (Eave Height)	20	22	22	23	24	25	25	27	27	26	26	26	26	27

Note: Plot Plan denotes typical layout; other arrangements are available to meet specific requirements.

Note: All dimensions are approximate, refer to Engineering drawing for detailed information.

Member ABMA

Industrial Boiler Co.

1-800-841-1313

Specifications subject to change without notice

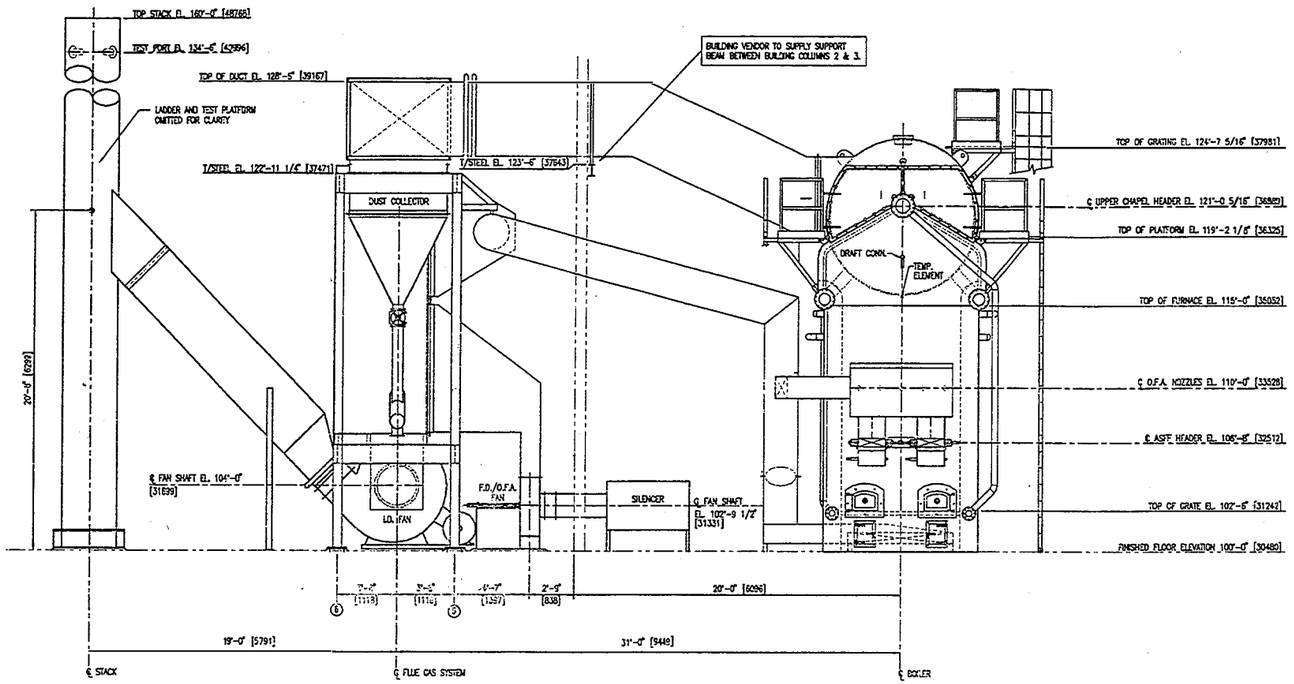

SECTION B
1100 1101

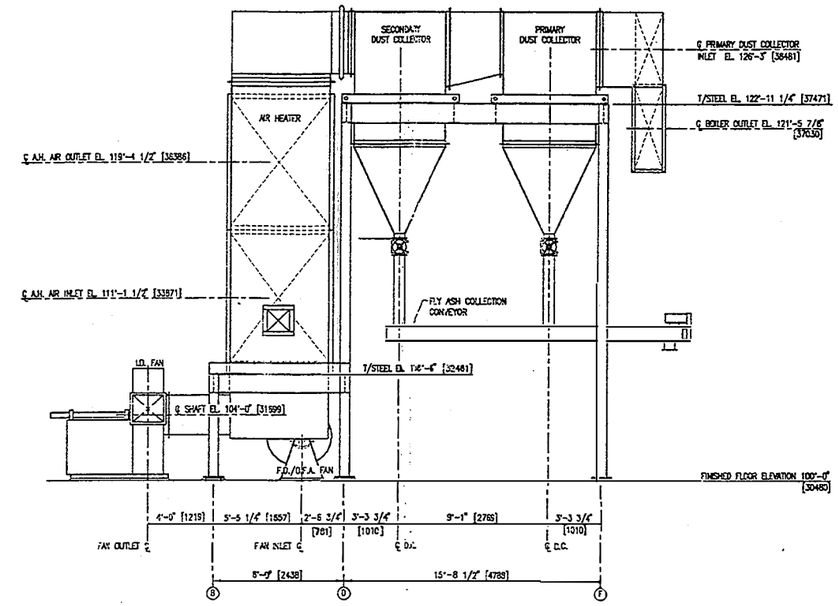

SECTION C
1100 1101

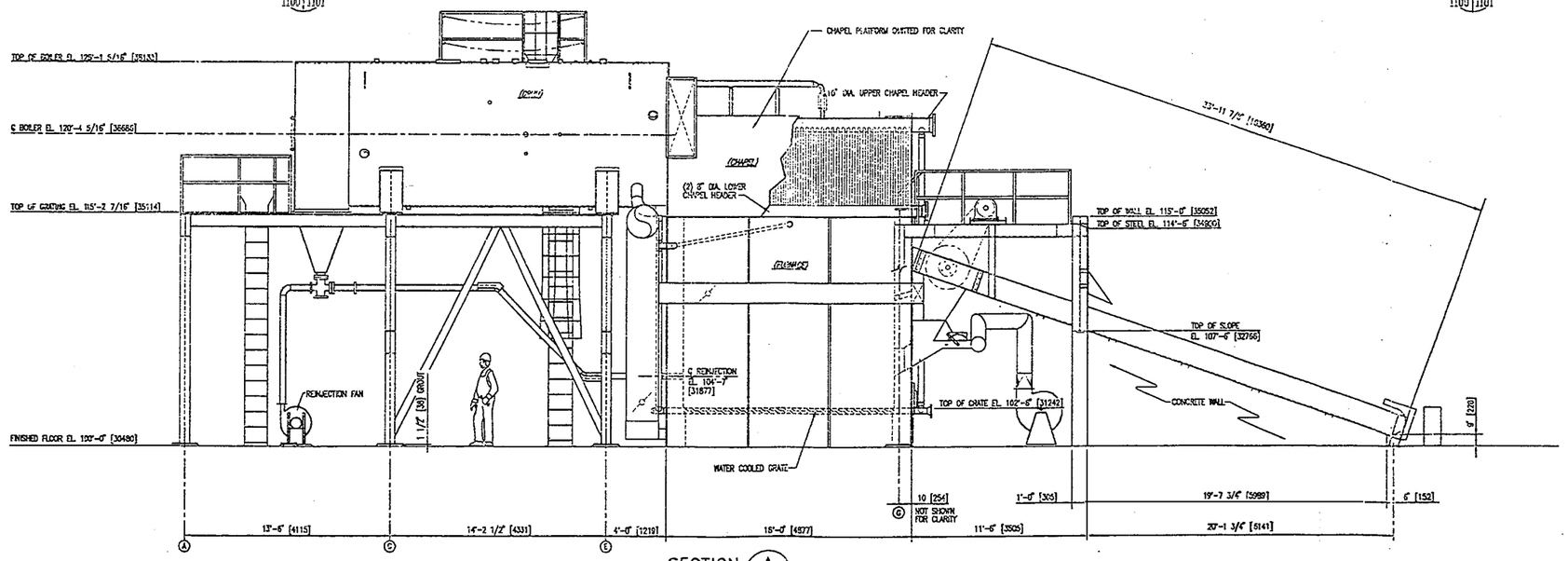

SECTION A
1100 1101

NOTE: BUILDING AND FOUNDATION DESIGN BY OTHERS.

NO.	DRWN.	CHKD.	ENG.	APPVD.	DATE	REVISION DESCRIPTION	NO.	DRWN.	CHKD.	ENG.	APPVD.	DATE	REVISION DESCRIPTION

© COPYRIGHT 1996 AS PER SUBSIDIARY THE McBURNEY CORPORATION

THIS DRAWING IS LOANED SOLELY FOR THE PERFORMANCE OF McBURNEY CORPORATION WORK. ANY REPRODUCTION IN WHOLE OR PART IS EXPRESSLY FORBIDDEN.

CAD FILE NAME: W1101
DRAWING SCALE: 1/4"=1'-0"

TENNECO PACKAGING

EVANSTON, ILLINOIS

McBurney

WOOD PRODUCTS PROJECT
SAW MILL COMPLEX – ENERGYPLANT
GENERAL ARRANGEMENT – ELEVATION

JOB NO. 296004
DWG. NO. 1101
REV.

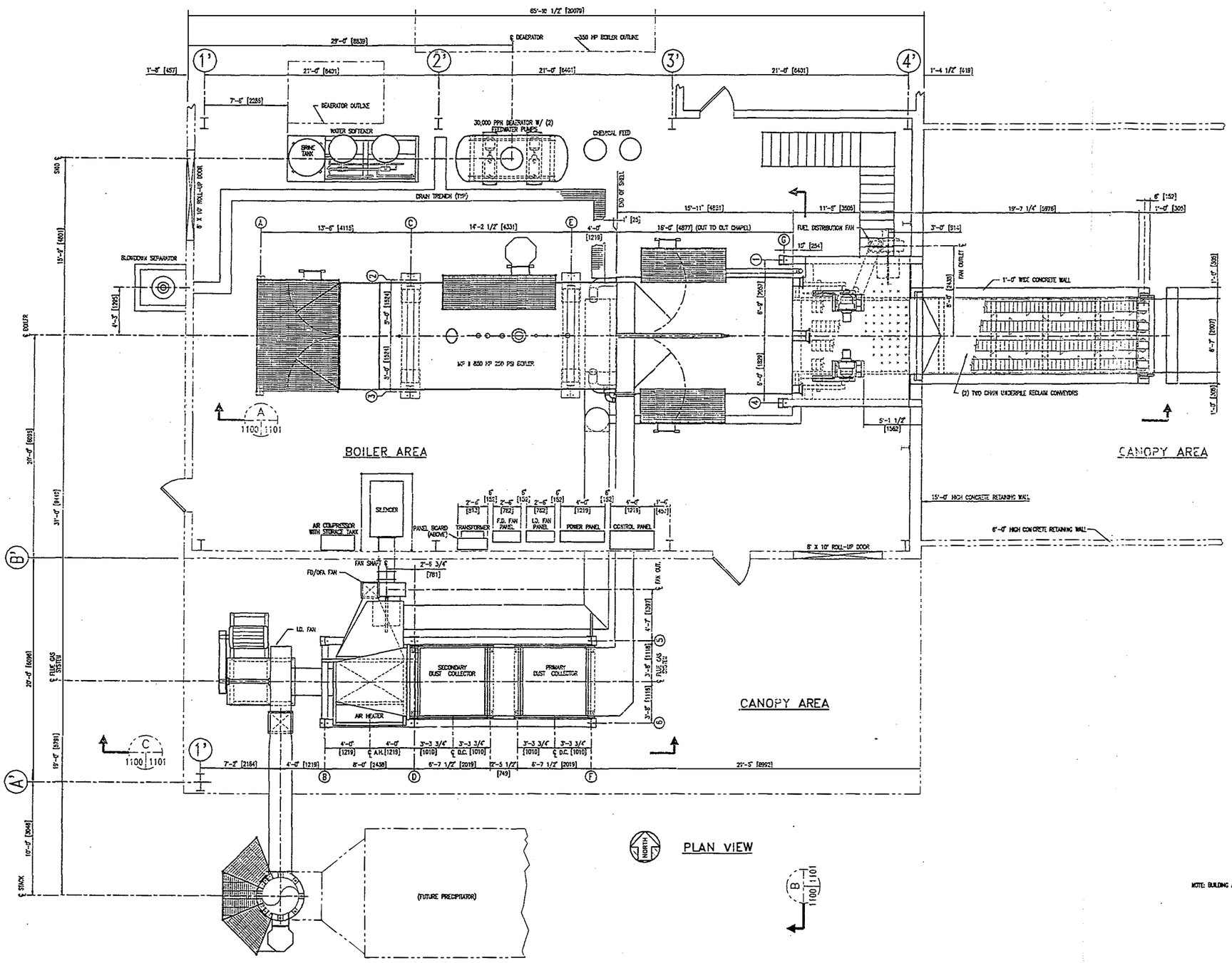

NOTE: BUILDING AND FOUNDATION DESIGN BY OTHERS

NO.	DRWN.	CHKD.	ENG.	APPVD.	DATE	REVISION DESCRIPTION	NO.	DRWN.	CHKD.	ENG.	APPVD.	DATE	REVISION DESCRIPTION

© COPYRIGHT 1991 ALL RIGHTS RESERVED THE McBURNEY CORPORATION

THIS DRAWING IS LOANED ONLY FOR THE PERFORMANCE OF McBURNEY CORPORATION WORK. ANY REPRODUCTION IN WHOLE OR PART IS EXPRESSLY FORBIDDEN

CAD FILE NAME: M1100
DRAWING SCALE: 1/4"=1'-0"

TENNECO PACKAGING

EVANSTON, ILLINOIS

McBurney

WOOD PRODUCTS PROJECT
SAW MILL COMPLEX – ENERGYPLANT
GENERAL ARRANGEMENT – PLAN VIEW

JOB NO. 296004
DWG. NO. 1100 REV.

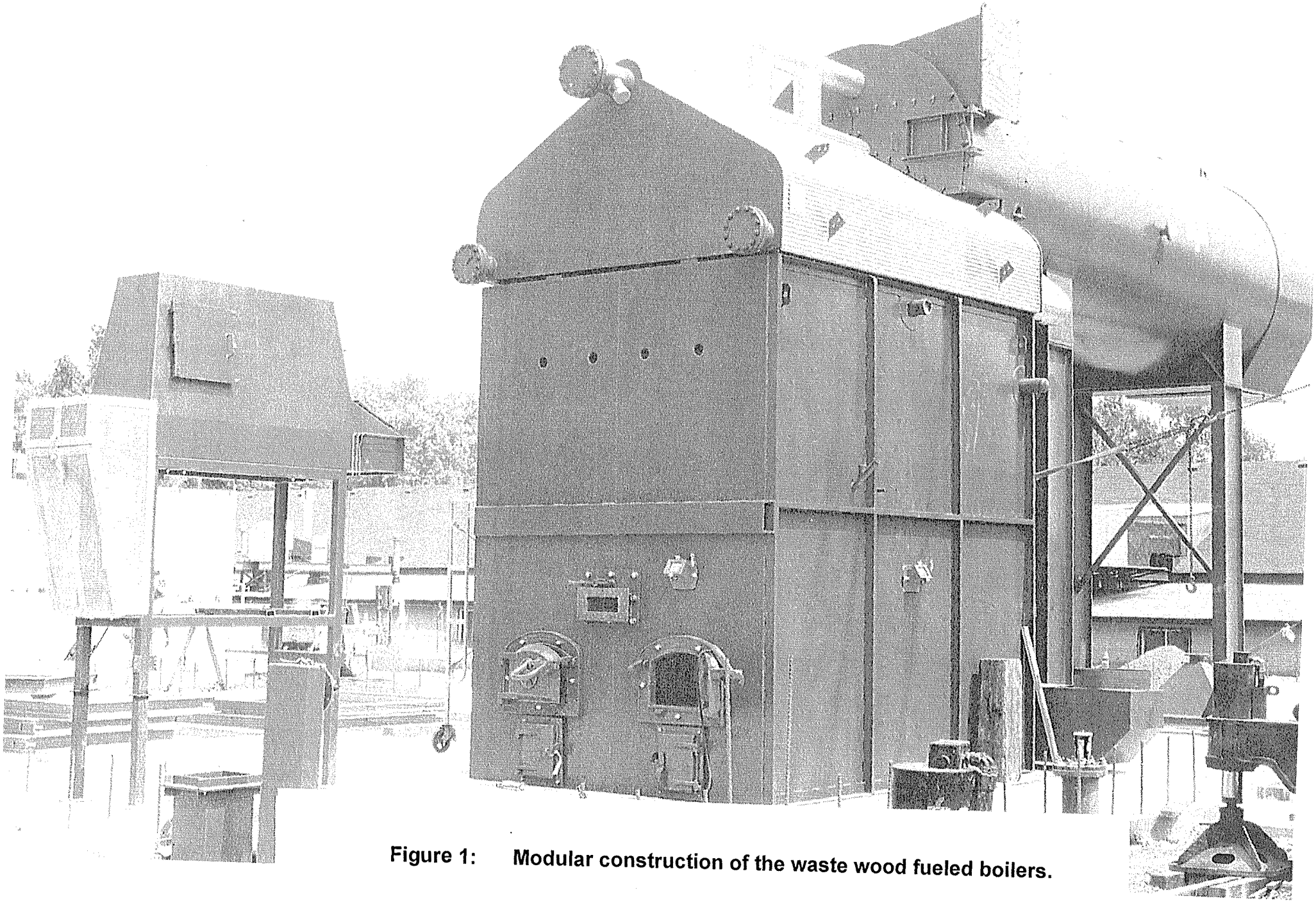

Figure 1: **Modular construction of the waste wood fueled boilers.**

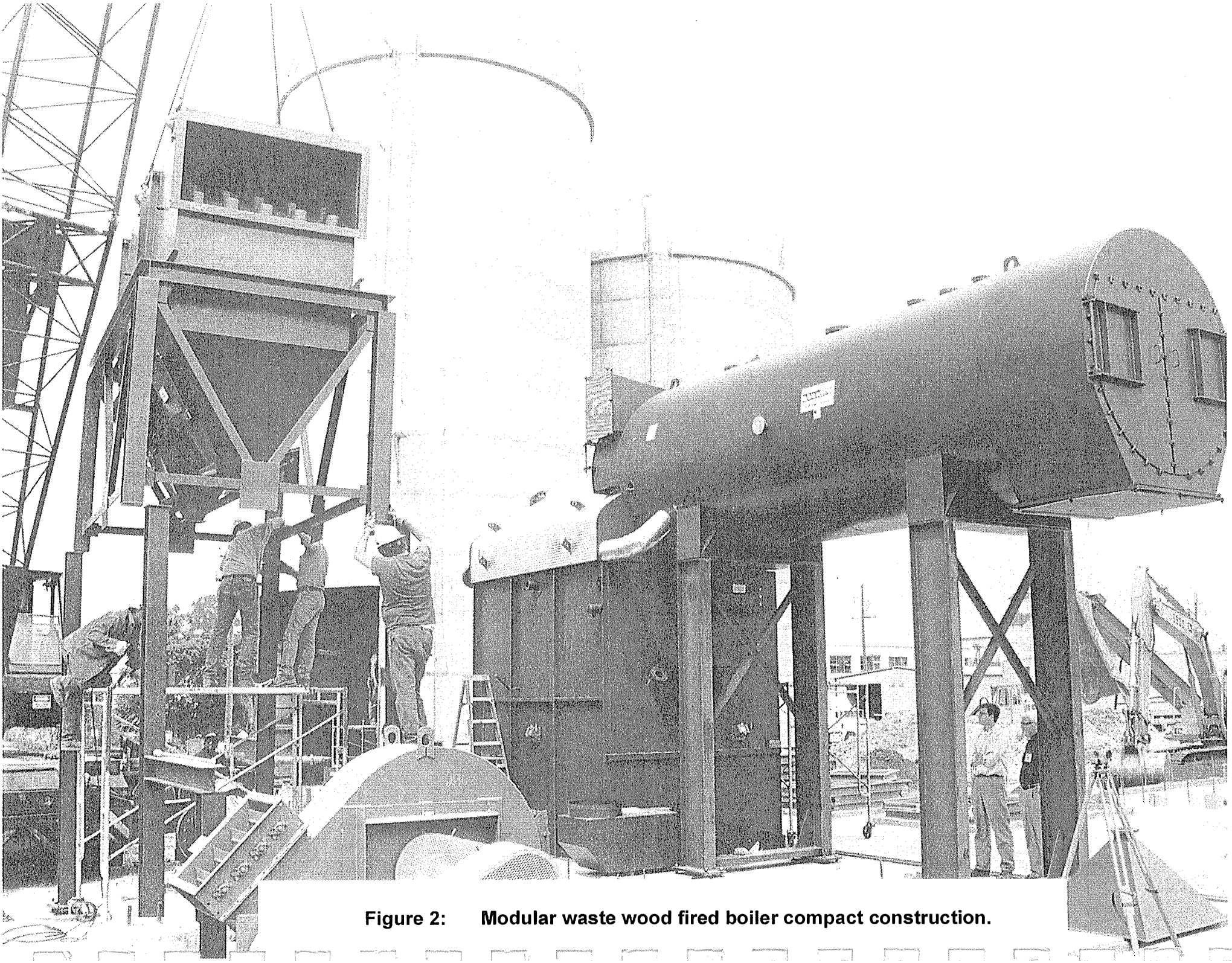

Figure 2: Modular waste wood fired boiler compact construction.

ATTACHMENT 3

Photographs of Project Site

Figure 3: Typical houses (flats) in the village of Verkhni-Ozerski.

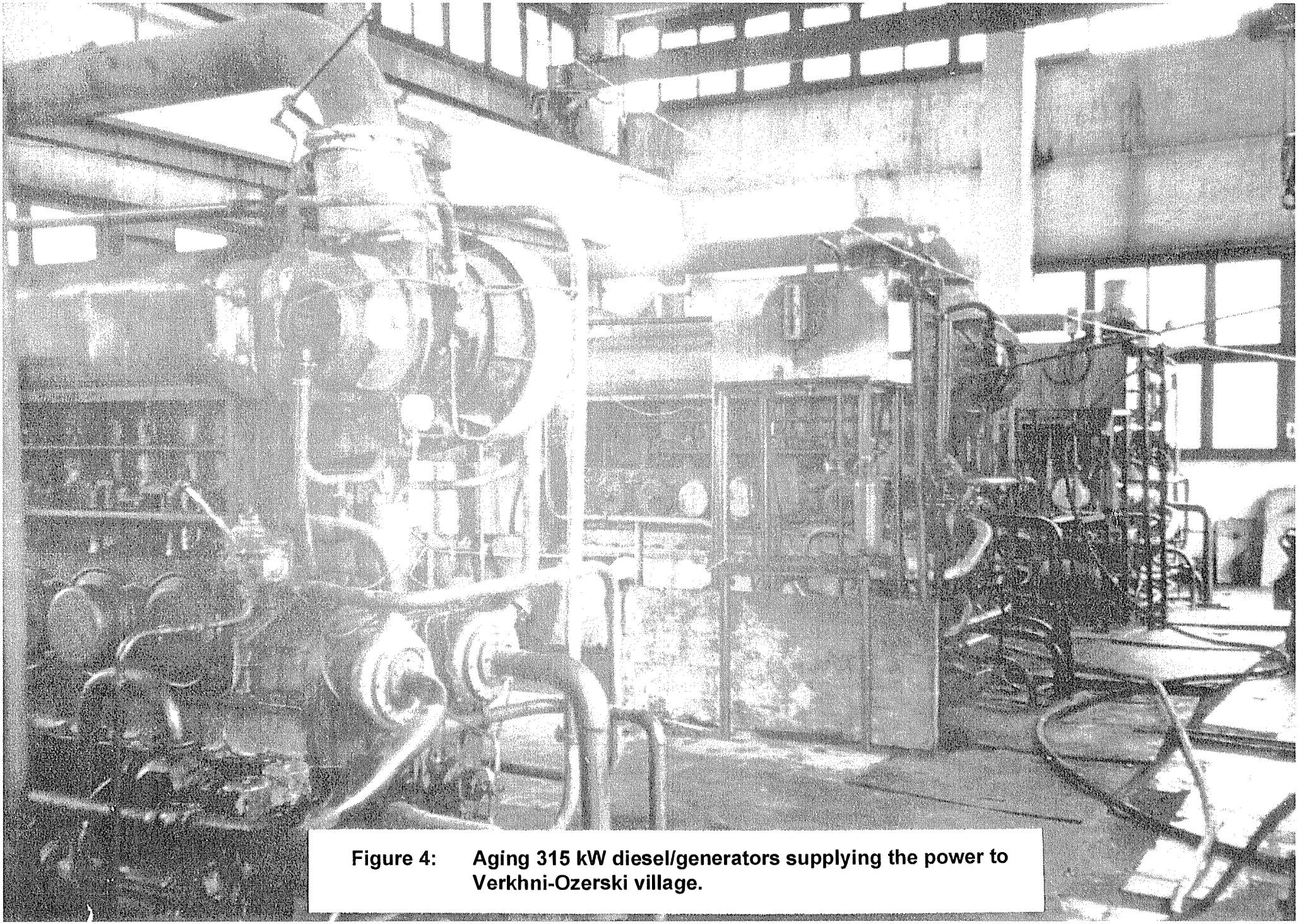

Figure 4: **Aging 315 kW diesel/generators supplying the power to Verkhni-Ozerski village.**

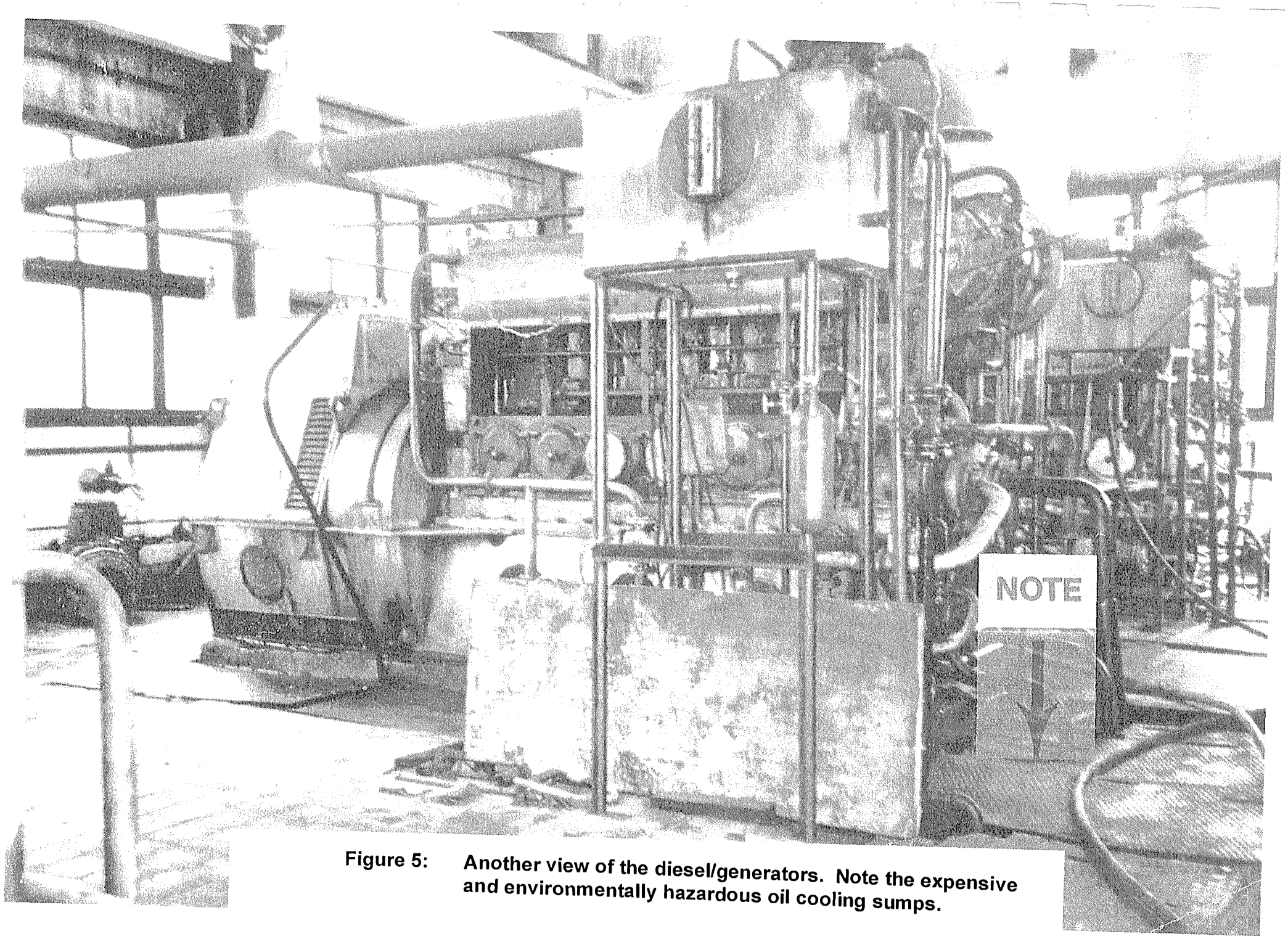

Figure 5: Another view of the diesel/generators. Note the expensive and environmentally hazardous oil cooling sumps.

ATTACHMENT 4

Communication with Russia's Ministry of Fuel and Energy

Mr. Jonathan Brown

Division Chief Infrastructure,
Energy and Environment Division

World Bank
1818 H Street, NW
Washington, DC 20433
fax 1 202 4773285

tel 1 202 4732469

Subject:
Preparing of the Program
"Extreme North energy Supply"

Ministry of Fuel and Energy of Russian Federation, State Committee of Russian Federation on development of North, Ministry of Economy of Russian Federation have elaborated Federal Program "Energy supply of regions of Extreme North with use of Renewable Sources of energy and local kinds of fuel for 1996-2000".

Expected final results of Program realization are: replacement to 2000 more than one million tons of delivered liquid fuel (petrol and Diesel fuel) due to including to energy balance of local renewable and non-renewable energy sources. This will allow to improve life and work conditions of more than 2.5 mln people living in hard climate.

Represented departments consider this Program as a priority one and ask to consider a question of giving a grant ($70 mln) and a loan ($300 mln) for Program financing. The total amount of requered financing is estimated at $1700 mln. It is supposed to cover up to 60% at the expense of region's budgets and the remained part - at the expense of enterprises and non-budget means.

Deputy Minister of Economy of Russian Federation	Deputy Minister of Fuel and Energy of Russian Federation	Deputy Chairman of Committe of Russian Federation on cocial-economic development of North
_____ Shamraev N.G.	_____ Bushuev V.V.	_____ Volgin A.I.
"____"_____ 1996	"____"_____ 1996	"____"_____ 1996

Г-ну Джонатану Брауну
Начальнику Управления
инфраструктуры, энергетики и экологии Мирового Банка
Вашингтон, Округ Колумбия, 20433
факс 1 202 4773285

О поддержке программы
"Энергоснабжение районов Крайнего Севера"

Министерство топлива и энергетики Российской Федерации, Государственный Комитет Российской Федерации по вопросам развития Севера, Министерство экономики Российской Федерации разработали Федеральную программу "Энергоснабжение районов Крайнего Севера за счет использования возобновляемых источников энергии и местных видов топлива на 1996-2000 годы".

Ожидаемые конечные результаты реализации программы - замещение к 2000 году свыше 1 млн. тонн завозимого жидкого топлива (бензин и дизельное топливо) за счет вовлечения в энергобаланс местных возобновляемых и невозобновляемых источников энергии. Это позволит улучшить условия жизни и работы более 2.5 млн.человек, проживающих в тяжелых климатических условиях.

Представляемые нами ведомства считают эту программу приоритетной и просят рассмотреть вопрос выделения гранта (70 млн.долларов США) и кредита (300 млн.долларов США) для ее финансирования. Общий объем требуемого финансирования по программе оценивается в 1700 млн.долларов США. До 60% расходов предполагается покрыть за счет бюджетов территорий, остальное - за счет средств предприятий и внебюджетных средств.

Заместитель Министра экономики Российской Федерации	Заместитель Министра топлива и энергетики Российской Федерации	Заместитель Председателя Комитета Российской Федерации по вопросам развития Севера
Шамраев Н.Г.	Бушуев В.В.	Шилгин А.И.
"15" ноября 1996 г.	"15" октября 1996 г.	1996 г.

ATTACHMENT 5

Preliminary Technical Specifications

PRELIMINARY

TURNKEY TECHNICAL SPECIFICATION

470 kW (Net) Waste Biomass-to-Energy Facility
Verkhni-Ozerski Village, Arkhangelsk Region, Russia

Prepared For

NATIONAL RENEWABLE ENERGY LABORATORY

SUBCONTRACT No. AAX-6-16752-01

ECOTRADE, Inc.

220 S. Kenwood St., Suite 305
Glendale, CA 91205-1671
Tel: (818) 240-4500 Fax: (818) 240-4501

Prepared by

INTERNATIONAL APPLIED ENGINEERING, INC.

2160 Kingston Court · Suite E · Marietta, GA 30067
Phone (770) 955-8284 Fax (770) 955-8194

Revision 0
August 23, 1997

Contract No. C2052.002

PRELIMINARY

PROJECT SPECIFICATION
TABLE OF CONTENTS

1.0 GENERAL

1.1 Process Description
1.2 Operating Theory
1.3 Project Approach
1.4 Basis of Design Information
1.5 Plant Equipment
1.6 Scope of Work
1.7 Boundaries of Supply
1.8 Training
1.9 Environmental Requirements

2.0 ENGINEERING

2.1 Project Management
2.2 Detail Design

3.0 EQUIPMENT

3.1 General Equipment Specification
3.2 Fuel Handling System
3.3 Auxiliary Fuel System
3.4 Boiler System
3.5 Steam Turbine System
3.6 Condensate System
3.7 Feedwater System
3.8 Raw Water/Service Water System
3.9 Demineralized Water System
3.10 Auxiliary Cooling Water System
3.11 Condenser Cooling System
3.12 Flue Gas Handling/Cleaning System
3.13 Ash Handling System
3.14 Fire Protection System
3.15 Plant Air System
3.16 Instrumentation & Control System
3.17 Motor Control Centers
3.18 Service Panels and Transformers
3.19 Civil, Structural and Architectural

PRELIMINARY

4.0 INSTALLATION

4.1 General
4.2 Mechanical
4.3 Civil & Structural
4.4 Electrical

5.0 COMMISSIONING

5.1 General
5.2 Operating Conditions
5.3 Review and Testing
5.4 Reliable Operation Test
5.5 Acceptance/Performance Test
5.6 Special Consideration of Commissioning

PRELIMINARY

1.0 GENERAL

This specification is for the creation of a standard biomass power plant whose design and installation can be used in numerous remote locations to supply electric and thermal energy for the local community economically. A specific site has been chosen to demonstrate the feasibility of this biomass power plant design concept. This specification has been written with this site location in mind. Other sites may require slight variations in this specification.

This specification is for the details of design, procurement, erection, startup and commission of a biomass power plant that shall generally burn available waste biomass fuel. It is intended that the facilities and equipment be of accepted industrial power plant quality.

The standard designed biomass power plant's function is to generate guaranteed net kilowatts at a guaranteed net heat rate with a minimum expected availability of 85 percent. This plant will also provide hot water to a district heating system or commercial process requiring low-grade heat.

1.1 Process Description

The power plant shall primarily use waste wood biomass as fuel. Heat generated through combustion of this material shall be used to produce steam to operate a steam turbine or steam engine generator to produce electric power. The electricity shall be supplied to the local utility's electrical transmission/distribution system. Waste heat from the electric generating facility will be utilized locally.

1.2 Operating Theory

The facility is to be designed and constructed for manual and automatic startup/shutdown operation. During normal operation, the facility shall be automatically controlled with continuous monitoring at full and partial loads.

The steam turbine or steam generator engine shall be started manually from a local control area until the rated speed has been stabilized. After stabilization, automatic synchronization shall take place and the automatic control systems of the turbine, generator, and the boiler system shall take over.

1.3 Project Approach

The contractor shall provide all equipment and services required to design, procure, permit, install, erect, startup, and commission the subject facility in a manner consistent with a turnkey project.

1.4 Basis of Design Information

All specified equipment and systems are based on requirements for producing the desired net power output utilizing biomass for which characteristics are herein provided. The characteristics (e.g., moisture content, heat value, etc.) of biomass fuel can vary from region to region or even at one site due to fuel type, time of year or

other factors.

Basic Plant Concept

The project's design concept and technology are based on existing packaged modular firetube/watertube boiler and "other off-the-shelf" equipment. The power plant site shall consist of:

- Biomass-processing yard, wood fuel feed and storage system
- Boiler with stationary pinhole grate
- Multi-cyclone particulate emission control system
- ID fan and stack
- Steam turbine or steam generator engine system
- Air-cooled condenser
- Associated mechanical, instrument and controls, and electrical balance of plant equipment
- Associated civil/structural support required for site work, buildings, and reliable plant operation

Main Parameters

The principal parameters governing the design and construction of the plant are as follows:

Minimum net rating:	500 kW
Fuel:	Waste biomass
Auxiliary Fuel:	No. 2 fuel oil
Boiler grate type:	Air-cooled
Flue gas cleaning:	Multi-cyclone
Turbine throttle steam conditions	10.34 bars gauge/10° C (150 psig/50° F) superheat
Condenser vacuum pressure:	0.103 bars (1.5 psia), based on 21°C (70°F) wet bulb
Condenser cooling:	Air-cooled condenser
Minimum turbine bypass:	30% baseload flow
Minimum availability:	85%
Plant performance fuel feed (wet):	Based on reference heat and mass balance

Waste Biomass Fuel Specification

The waste biomass to be used as fuel shall be prepared to meet the biomass fuel specifications in the waste-biomass-processing plant contiguous to the generating plant. The waste-biomass-processing plant shall be designed to accept a broad variety of waste-biomass materials that may range from dry sawdust and shavings from a furniture plant to agricultural waste, but not be limited to, round-wood culls from forestry and logging operations. The waste-wood fuel mix shall vary significantly from season to season and

some large daily variations may be expected.

Auxiliary Fuel

The auxiliary fuel shall be number 2 distillate fuel oil that shall be used for plant start-up and to maintain the plant operation during interruption of the biomass feed. Fuel oil shall be stored in one American Petroleum Institute (API) steel tank. The tank shall provide enough storage to operate the plant for 72 hours at 30 percent Maximum Continuous Rating (MCR).

Water Analysis And Availability

The plant shall use a closed-loop heat dissipation system that includes an air-cooled condenser and heat exchangers that will provide energy for building(s) and/or commercial process(es). The water withdrawn from the water source shall be stored in a raw-water storage tank. Water from this tank shall be fed to the demineralization plant and to the service water system.

Electrical Interconnection

The main generator shall be nominal 588 kVA, .85 power factor, 4000 VAC, 50 cycle synchronous. The station auxiliary power shall be fed through the unit auxiliary transformer that shall be connected to the transmission/distribution system. Metering shall be connected to measure net plant electrical output.

Local Conditions

The Arkhangelsk Region is situated in northern European Russia. Its coasts are washed by cold waters of three arctic seas: White, Barents, and Karskoe. The region covers 589,900 sq. km, 2.7% of the Russian Federation territory. Arkhangelsk constitutes about 1% of the nation's population. Forests cover 39% of the territory; agricultural land 1.3%; reindeer pastures 24.2%; islands 19%; and the rest are rivers, swamps, and lakes.

The climate is severe because the location is close to seas and the Arctic Ocean. Winters are cold with temperatures as low as -26°C. Weather is unpredictable and varied. The length of the day ranges from 3 hours 30 minutes (December 22) to 21 hours 40 minutes (June 22). The port of Arkhangelsk's latitude is equal to that of Fairbanks, Alaska.

Design for Environment

The design shall be for high availability and reliability. The flue gas systems shall be designed for outdoor operation. The boiler and turbine/generator systems shall be enclosed in a suitable building. Freeze-protection systems shall be provided.

Site Work

Civil work shall include but not be limited to the following:

- Prefabricated buildings will be supplied as applicable.
- The Contractor shall design and provide the potable-water-treatment system.

- The Contractor shall provide and install a septic-tank-type sanitary system.
- Soil-supported foundations shall be provided, based on soil-boring data.
- Maximum elevation variation within the site is approximately 4.6 meters (15 ft).
- Plant site drainage and other discharges shall be routed through a settling basin and overflow weir system.

1.5 Plant Equipment

The following outline provides a general description for the engineering, design, procurement, and construction of a biomass-fuel-fired power plant.

Boiler

The boiler shall be a firetube type, designed to operate at a nominal pressure of 12.07 bars gauge (175 psig) and temperature of 10°C (50°F) superheat. The boiler shall be rated to produce sufficient steam for the plant to generate the guaranteed net output and heat rate when burning 40% to 60% moisture biomass fuel. The boiler shall be a conservatively designed furnace capable of firing a wide variety of biomass.

The boiler shall be a shop-fabricated, frame-supported, single- or double-pass type, complete with steel furnace walls, baffles, refractory, undergrate air, biomass fuel nozzle, auxiliary fuel burner, overfired air nozzles, and insulation. The boiler shall have, but not be limited to, relief valve openings, feedwater connection, flowdown connection, and steam outlet.

Fuel-Firing System

The fuel-firing system shall be designed to provide an even distribution of air and fuel into the boiler for maximum combustion efficiency and even distribution of heat load for steam generation. The system shall include, but not be limited to, the following:

- Fuel-metering bin
- Pneumatic biomass fuel distributor
- Air-cooled grate
- Overfire air system
- Auxiliary oil burners.

Flue Gas System

The flue-gas system shall be routed through multi-cyclones for particulate-emissions control. The flue-gas system shall consist of, but not be limited to, the following:

- Mechanical collector
- Induced draft fan
- Free-standing stack
- Interconnecting flues.

Ash System

The furnace grate shall have steam-jet nozzles that can be manually operated to blow ash from the grate into the ash pit.

Screws and/or drag chains, conditioned with a paddle-screw-type ash conditioner, shall convey the fly ash from the mechanical multi-cyclone separators, and boiler hoppers, and be discharged to the ash bunker.

Fuel-Handling System

The fuel-receiving and preparation system shall consist of a receiving hopper, belt conveyor and disc screen. A receiving/handling area for whole logs with a chain conveyor and a chipper shall be provided.

Fuel Storage and Boiler Feed System

An inclined conveyor belt shall convey the prepared fuel to the dry-fuel storage hopper, where the fuel shall be distributed to the boiler by means of a fuel-metering system.

Turbine or Steam Engine Generator System

One condensing, geared steam turbine or steam engine generator unit per site, designed to operate at a nominal throttle pressure of 10.34 bars gauge (150 psig) and 10°C (50°F) superheat temperature, shall be included. The generator shall be designed for open air-cooling and shall be equipped with a static exciter and voltage regulator system. The turbine generator shall be capable of producing nominal 500-kW gross.

An air-cooled condenser will be supplied instead of a cooling tower. Exhaust steam from the turbine or steam engine shall enter the air-cooled condenser, which rejects heat to the atmosphere. The condenser shall be of a fin-tube design. The condensate shall be collected in the hotwell that includes adequate storage capacity for three minutes normal to low-level trip. In addition, the necessary air removal equipment shall be provided to remove noncondensible gases.

Hot condensate from the condenser shall be routed through a heat exchanger prior to reintroduction to the deaerator. This heat exchanger will provide hot water for local heating and/or a commercial process(es).

The feedwater system shall make use of low-pressure turbine extraction steam for heating condenser condensate and feedwater make-up. Control of feedwater make-up supplied from the demineralized-water storage tank shall be from condenser hotwell level.

Raw water shall be supplied to the make-up water treatment system from the raw-water storage tank. Fin-fan-type air coolers shall be supplied to provide plant auxiliary water cooling as required.

Electrical System

The electrical system shall include, but not be limited to, the following major components:

- Main and auxiliary transformers
- Generator bus duct and high-voltage switchgear
- Motor control centers
- Plant lighting
- DC battery emergency system
- Secondary systems for control and protection
- All cable trays, raceways, pull boxes, etc. shall be engineered systems with construction drawings.

Instrumentation and Controls

The biomass plant instrumentation and controls shall consist of process controls, safety controls and field instrumentation to operate the total system within design parameters. The foregoing shall primarily incorporate a programmable logic controller (PLC) control system, burner management system, and necessary recording, annunciating, instrumentation, measuring, positioning equipment, and compressed plant air/instrument systems. All field instruments (transmitters, sensors, controllers, etc.) shall be provided, including connecting cables, conduits, cabinets, panels, and terminal blocks.

Civil/Structural/Architectural

All civil work shall include site preparation, concrete foundations, and necessary paving. The boiler plant and steam turbine or engine generator shall be designed for indoor operation. The associated air and flue-gas equipment shall be designed for outdoor operation.

All structural work, such as building support steel, platforms, stair stringers, handrails, kickplates, etc., shall be included for the total plant. Platforms, rails, and ladders shall be provided to access and maintain all manual and automatic valves and controlled equipment.

Architectural work shall include the following:

- Boiler, generator, and water treatment buildings
- Control room
- Office area
- Maintenance area
- Ash containment enclosure
- Biomass fuel storage enclosure.

Pipe, Valves, and Fittings

All power plant systems and subsystems, pipes, valve hangers, and fittings shall be included. All control valves shall have flanges and shall have isolation and bypass valves. All major components (such as pumps, filters and compressors, etc.) shall be connected with flanges

for future ease of maintenance and accessibility.

Spare Parts

The plants shall be able to operate in a remote location with minimal access to manufacturer's spare parts and replacement equipment. The engineering, procurement, and construction (EPC) contractor shall include a list of recommended spare parts and replacement equipment to allow for operation of the plant based on a six-week replacement lead time plus planned maintenance spares for three years of operation. Covered storage space and stocking facilities for all spare parts and replacement components shall be provided as part of the maintenance area.

1.6 Scope of Work

This specification is for a turnkey contract to perform the detailed design, procurement, supply, installation, commission, performance testing, and operator/maintenance training for a standard power plant designed to burn biomass fuel and generate electricity at the interconnection point at numerous potential locations.

1.7 Boundaries of Supply

The Purchaser Shall Provide:

- Chemicals for feedwater treatment, demineralizer and cooling-water treatment, after the initial charge provided by the EPC contractor
- Number 2 fuel-oil receiving station on site
- Removal and transportation of the ash for disposal
- Fuel supply including wood logs, processed and unprocessed biomass
- Raw water at well discharge with 4.14 bars gauge (60 psig) pressure from purchaser-supplied wells and pumps on site.

The Contractor Shall Provide:

- Access road to the plant
- Access to fuel-oil storage tanks; all connections and metering necessary to unload fuel oil
- Biomass storage bin for three days capacity
- Terminal point for the raw-water supply at the outlet of the well pump connections
- Septic tank and drain field system for sanitary waste disposal
- Discharge of the process wastewater
- System for directing and controlling the storm-water runoff
- Roads inside the plant boundary
- Electrical switchyard surrounded by a 2.45-meter (8-ft.)-high fence with barbed wire angled at the top.

1.8 Training

Recognizing that training shall play an important role in maintaining plant availability, it is necessary that the EPC contractor provide adequate training in the areas of operations and maintenance.

The following items represent the minimum that the EPC contractor shall provide for O&M training:

- Operating procedures
- Maintenance manuals
- P&ID for all systems
- Process-flow diagrams
- Plant maintenance manual
- Coordination with O&M contractor
- Vendor training
- Basic training requirements for power plant operators.

1.9 Environmental Requirements

General Environmental Requirements

Environmental issues that should be addressed by the EPC contractor are as follows:

- Air emissions
- Liquid effluents
- Water treatment system discharge
- Boiler blowdown
- Plant sump discharges
- Biochemical oxygen demand
- Oil and grease
- Total suspended solids
- pH
- Temperature
- Total heavy metals.

Other Environmental Requirements

The following areas need to be addressed in detail for hazardous-material handling and storage:

- Chromates
- Polychlorinated biphenyls (PCBs)
- Chlorofluorocarbons (CFCs)
- Petroleum lubricants and fuel
- Liquid and material storage.

Hazardous-Material Handling and Storage

PRELIMINARY

The following areas need to be addressed in detail for hazardous-material handling and storage:

- Handling and storage
- Fire prevention
- Safety
- Adverse work conditions
- Elevated platforms and walkways
- Protective clothing and breathing apparatus
- Signs and labels.

2.0 ENGINEERING

The contractor shall provide all engineering and technical support required for calculations, studies, drawings, specifications, and other documents necessary for equipment design, site preparation, equipment procurement, equipment installation and erection, system commission and start-up, and facility operation and maintenance.

2.1 Project Management

The plant designs are expected to be similar, taking into account site-specific conditions based on fuel type, ambient temperature, etc. For each site, the following project control documents shall be developed:

- Project schedule
- Equipment list
- Drawing schedule
- Purchasing schedule
- Specification list
- Document list
- Site drawing for each facility.

2.2 Detail Design

The facility and all systems shall be designed in full accordance with all Federal, State, Province, and Local regulatory requirements. It shall be the contractor's responsibility to obtain all necessary construction permits in a timely fashion.

Design Notes/Studies

The contractor shall prepare for the purchaser's review, design notes for all facility systems that shall be reviewed and approved, and stamped by a competent professional engineer in the requisite field.

Drawings

The contractor shall prepare design and installation drawings for all aspects of the facility. All drawings shall be reviewed, approved and stamped by a competent professional engineer or architect in the applicable field.

Documentation

Prior to the start of construction the contractor shall submit and obtain the purchaser's approval of the Contractor's Quality Assurance Manual.

Specifications

A copy of all final specifications, which reflect the "as procured" equipment or service, shall be submitted to the purchaser after equipment or service contract award.

3.0 EQUIPMENT

This specification establishes the minimum scope of equipment to be furnished.

3.1 General Equipment Specification

This section specifies minimum performance and design criteria for all facility systems as explicitly specified in subsequent sections.

Codes and Standards

The contractor shall comply fully with all current regulatory requirements in effect when contract is executed.

General Piping and Equipment Design

The contractor shall be responsible for implementing and maintaining compact, organized and easily accessible piping and equipment arrangements.

Fans and Pumps

Unless otherwise specified, all fans and pumps required within the individual systems shall be designed to provide at least 115% of the flow and 135% of the static head at the maximum required load. Prime movers shall be suitably sized for these conditions as well as for start-up.

Operating Conditions

Unless otherwise specified, all systems shall be designed for continuous operation. Components that are located outdoors must be suitably protected from the elements and against the ingress of foreign substances.

General Design

This specification outlines the minimum design, performance, and scope of equipment requirements for facility systems. The contractor is expected to supplement these with his own design and quality requirements. It is intended that the facility and equipment be of accepted industrial power plant quality.

Maintenance Tools and Equipment

The contractor is required to supply a complete set of all special tools that may be required for normal operation and maintenance of the supplied equipment.

Consumable and Spare Parts

The contractor shall provide a list of all required consumables and recommended spare parts.

3.2 Fuel-Handling System

General

This specification covers the fuel receiving and preparation system as well as the fuel storage and boiler-fuel-feed systems. The biomass fuel receiving and preparation system shall consist of a storage area, receiving hopper, conveyor belt.

The receiving and preparation system shall be sized to operate eight (8) hours per day, five (5) days a week, and still be able to supply the plant with fuel for continuous operation at 110% load. The fuel system and boiler-fuel-feed system shall be designed to operate continuously and be able to provide 150% of the fuel flow required at boiler maximum continuous rating (MCR). Eighty percent of the fuel chips will be five (5) cm (2 inches) or less in size.

Fuel Receiving and Preparation System

The following items need to be addressed as part of the fuel receiving and preparation system:

- Truck dump area
- Receiving hopper
- Log receiving area
- Chipper.

Fuel Storage and Boiler Feed System

A comprehensive fuel storage and boiler feed system shall be developed to complement design requirements. The following areas should be addressed in detail.

- Fuel storage
- Fuel feed hopper
- Boiler feed conveyor.

3.3 Auxiliary Fuel System

General

The facilities shall be provided with an auxiliary fuel system to provide No. 2 fuel oil for start-up and auxiliary burners in the boiler.

Equipment to be Furnished

One complete 50% capacity system to transfer the fuel from the storage tank located within the facility site boundaries to the necessary burners. The system shall include all storage tanks, pumps, controls, piping, and valves, necessary for a complete system. Auxiliary burners shall be provided complete with removable oil guns.

3.4 Boiler System

General

The boiler system shall principally consist of, but not be limited to, a firetube boiler with steam outlet, relief valves, blowdown connection(s), and feedwater connection. Additionally, this system shall include boiler trim, grate, fuel spouts, overfire air, primary air, combustion air, induced draft fan, air pollution control equipment, dampers, flues, and ducts. The boiler shall be equipped with all necessary hardware, such as safety valves, non-return valve, main steam stop valve, water column, level gauge glass, drain and vent valves, blowdown valves, etc.

Fuel-Firing System

The grate shall be a fixed, air-cooled, pinhole design. The fuel shall be distributed across the grate by means of air-swept spout feeders.

Combustion-Air System

The capacity of the forced draft fan shall be based on the worst-case fuel firing. This fan will provide all the air required for the overfire, undergrate, and burner-swept systems.

Overfire Air System

The air discharged from the forced-draft/overfire air fan shall be distributed to the overfire air headers on the front and rear boiler walls.

Undergrate Air System

Air from the forced-draft/overfire air fan shall be ducted to the undergrate air plenum.

Burner Air System

Air from the forced-draft overfire air fan shall be ducted to the air-swept burner spout.

Flues and Ducts

Boiler flues and breaching shall be provided to interconnect all the components of the flue-gas system. Air ducts shall be provided as necessary to interconnect all components of the combustion-air system.

Auxiliary Systems

A continuous-blowdown system shall be provided to control the solids concentration of the boiler water.

3.5 Steam Turbine System

General

This facility shall be provided with a condensing steam turbine system to generate mechanical energy to be transmitted to the electrical generator. This turbine system shall include the steam turbine, steam turbine bypass and all ancillary equipment necessary for a complete system.

Equipment to be Furnished

The steam turbine system shall consist of, but not be limited to, the equipment listed below:

- One geared multistage condensing steam turbine
- One steam turbine generator oil-lubricating system common for turbine, reduction gears, and generator in accordance with the manufacturer's standard
- One steam turbine-to-condenser bypass system for 30% of the maximum capacity of the steam turbine, complete with high-pressure control, low-pressure/temperature control, monitoring equipment, spray water control valve, etc.

Operating Conditions

The steam turbine system shall be required to operate continuously with minimum unscheduled outages.

General Design

The design and control of the steam turbine system must be such that the fluctuations in steam flow can be accommodated.

Special Requirements

The Contractor shall provide a steam turbine-generator system of the indoor design with suitable turbine system building with all required maintenance systems and laydown areas for major maintenance outages for all equipment therein.

3.6 Condensate System

General

This specification covers the condensate system and consists of all piping and equipment necessary for the transport, storage, treatment and heating of the condensate from the condenser through the deaerator. related systems include the feedwater, raw water/service water and demineralized water systems.

Equipment to be Furnished

The condensate system shall consist of, but not be limited to, the equipment listed below:

- Demineralized water storage tank
- Condenser and air ejector
- Condensate pumps
- Deaerator and deaerator storage tank
- Piping, valves, and accessories.

3.7 Feedwater System

General

This specification covers the boiler feedwater system. The feedwater system includes all piping and equipment necessary for the heating, transport, and treatment of boiler feedwater.

Equipment to be Furnished

The feedwater system shall consist of, but not be limited to, the equipment listed below:

- Boiler feedwater pumps
- Piping
- Valves and accessories.

3.8 Raw-Water/Service-Water System

General

This facility shall be provided with a raw-water/service-water system to furnish the necessary plant systems with water.

Equipment to be Furnished

One complete raw-water/service-water system, to begin at facility well pump outlets and provide water to all necessary equipment, including storage tanks, piping, pumps, valves, controls, etc. for a complete system.

Raw-Water Storage Tank

A storage tank with an operations discharge outlet at least 6.1 meters (20 feet) above grade elevation shall be provided.

3.9 Demineralized Water System

General

The demineralized water system shall be used to provide make-up water to the boiler.

Equipment to be Furnished

Acid/caustic regeneration system(s) should be included for the ion exchanger. A neutralization system should also be provided.

General Design

Selection of equipment for water treatment is based on the quality of raw water available at the site, as well as minimum-allowable contaminant concentrations.

3.10 Auxiliary Cooling-Water System

General

Auxiliary equipment such as the steam turbine lubrication oil cooler(s), boiler feedpump coolers, and instrument/service air compressor(s) and after-cooler(s) shall be cooled by water from the auxiliary cooling-water system.

Equipment to be Furnished

The auxiliary cooling-water system shall consist of all equipment and material required to provide adequate cooling to all equipment required.

Piping, Valves, and Accessories

Piping for the auxiliary cooling-water system shall include, but not be limited to, piping from the fin-fan air cooler system to all auxiliary systems that require cooling.

General Design

The auxiliary equipment to be cooled shall include, but not be limited to, steam turbine generator lubrication oil cooler(s), instrument and service-air compressors, and after-coolers, fan bearings, and pump prime movers.

3.11 Condenser Cooling System

General

Circulating water in a closed recirculation loop through an air-cooled condenser shall cool the condenser. The condenser cooling system shall consist of all piping and equipment necessary for the transport, treatment, and cooling of the condenser-cooling water.

Equipment to be Furnished

The condenser cooling system shall consist of, but not be limited to, the equipment described below:

- Air-cooled condenser
- Circulating-water pumps
- Condenser cooling water butterfly valves and expansion joints
- Piping, valves, and accessories.

Special Requirements

Because condenser cooling water circulates through a system closed to the atmosphere, the quality of the water shall be maintained by installing a condenser cooling water treatment system for the circulating cooling water.

3.12 Flue-Gas Handling/Cleaning System

General

The flue-gas handling/cleaning system shall principally consist of a multi-cyclone for particulate control, an induced draft fan, a freestanding stack, and interconnecting flues.

Equipment to be Furnished

The particulate control equipment shall consist but not be limited to, the equipment listed below.

- Multi-cyclone
- Rotary seal valves
- Induced draft fan
- Stack
- Flues and breaching.

3.13 Ash-Handling System

General

The ash-handling system shall principally consist of rotary seal valves, and screw conveyors and drag chain conveyors for the fly ash.

Bottom-Ash-Handling System

The bottom-ash-handling system shall consist of, but not be limited to, the following systems listed below:

- Bottom-ash chutes
- Fly-ash system
- Ash conditioner
- Ash bunker.

3.14 Fire Protection System

General

The facility should be provided with a fire protection system.

Equipment to be Furnished

The fire protection system for the subject facility should include all pumps, sprinklers, pipes, fire detection system, fire alarm system, manual fire protection system, hydrants, controls, etc. as required by the owner and the owner's insurance carrier.

General Design

The fire protection system should be consistent with good design practice and recognized standards for industrial power plants.

3.15 Plant Air System

General

The facility should be provided with instrument-air and service air systems. The air systems are considered crucial for facility operation and therefore shall be designed and furnished such that the facility shall have a high reliability and availability.

Equipment to be Furnished

Packaged, air-cooled rotary screw compressors should be furnished complete with inlet filters, after-coolers, controls, air receiver and distribution manifolding.

Operating Conditions

The air compressors' intake ducts shall be run to the outside of the building on the north side.

3.16 Instrumentation and Control System

General

The power plant control system shall consist of a Programmable Logic Controller (PLC) control system (local instruments and control panel(s). This system shall be fully integrated, microprocessor-based, and suitable for control and data acquisition.

Operating Conditions

The instrumentation and control system shall perform the following major control functions:

- Boiler protection
- Combustion controls
- Combustion-air control
- Boiler furnace pressure control
- Fuel-feed system
- Boiler-drum-level control
- Boiler steam temperature control
- Deaerator level control
- Hotwell level control
- Start-up/auxiliary burners
- Analysis of steam and water.

Safety Requirements and Redundancy

Under no circumstances shall a single failure lead to an outage of the complete control system. This requirement must be taken into consideration in the design of the communication system and the power supply.

Control Room Equipment

The control room equipment, such as control stations, alarms, recorders and indicators, shall be capable of safely shutting down the boiler, turbine, and other major components.

Alarm Annunciation System and Status

The PLC shall include alarm annunciation and sequence-recording system for the processing and annunciation of all-important alarms. Status changes of the plant shall be provided in the main control room.

Power and Control Cables

All power and control cables shall be fire-retardant and shall not contain any PVCs (poly-vinyl chlorides). Signal cables shall be run in separate conduits or cable trays from power cables.

- Cable trays shall have covers.
- Multi-conductor cables shall be labeled at each termination point for future ease of identification.
- Signal cables shall be shielded to prevent unwanted signal interference or noise. All control loops shall be designed such that signal interference shall not disrupt the functioning and operation of the control system or its sensor, transmitters, etc.

3.17 Motor Control Centers

General

The facility shall be provided with a 220/440 VAC motor control center (MCC) to be located in the control building with the necessary number of plugging cubicles. The MCC shall provide power to all equipment and motors. This system shall include all cable, conduit and termination to all motors and equipment.

Equipment to be Furnished

The following systems shall be provided with dedicated motor control centers:

- 220 and 440 VAC panels
- Boiler system
- Turbine system
- Biomass feed system
- Auxiliary and condenser cooling system
- Flue-gas handling/cleaning system
- Demineralized-water system
- Lighting and building services. Sufficient supplies for future use must also be provided.

3.18 Service Panels and Transformers

General

The facility shall be provided with 220 VAC panels to supply power for building services and instrumentation. Dry-type transformers shall be provided to feed all 220 VAC panels.

Equipment to be Furnished

- 220 VAC panels
- Dry type transformers.

Operating Conditions

Motor control centers shall supply 440 VAC power to transformers to convert this voltage into 220 VAC to feed panels.

3.19 Civil, Structural, and Architectural

General

The contractor shall be responsible for all site work including clearing, grubbing, excavation, fill, rock excavation, disposal of excess materials, site utilities, erosion control, site drainage, retention of runoff, building pads, roads, walks, curb and gutter, grassing and landscaping for a complete job. The contractor shall also be responsible for all subsurface investigations, construction and local permits, testing and necessary inspections. The contractor shall be responsible for, but not be limited to, the following classes of work:

- All structural design, fabrication, and installation necessary to provide a complete job
- All architectural design, fabrication and installation necessary to provide a complete job
- All heating, ventilation, and air-conditioning design, fabrication and installation necessary for a complete job
- All plumbing design, fabrication, and installation for water, sanitary or process necessary for a complete job
- All electrical; both lights and power, alarms, communication systems design, fabrication and installation necessary for a complete job
- All work shall comply with applicable codes and regulation of Local and Government requirements.

Work to be Furnished

The contractor's scope of work shall include all design, materials, labor, equipment, and services necessary to provide a complete job.

The site shall be cleared, and grub and vegetation disposed of, in compliance with applicable codes. Erosion control shall be installed prior to start of clearing and grubbing and shall be maintained until completion of the work.

All excavation necessary for the work, both repayable and nonrepayable in nature, is the contractor's responsibility. The suitability of excavated material for fill and backfill, and density of compaction shall be the Contractor's responsibility.

The design and installation of foundations shall be in accordance with requirements of the site subsurface conditions and good engineering practices.

The contractor shall be responsible for design and installation of underground utilities.

The contractor shall be responsible for the design and installation of all structures, including necessary equipment, piping, access, and maintenance appurtenances.

PRELIMINARY

The contractor shall be responsible for design and installation of all buildings. The following items shall be incorporated into the design:

- Access roads
- Drainage
- Painting
- Insulation
- Fence.

General Design

Site work, including excavation, fill and cut slopes, and compaction shall be in accordance with the contractor's supplied subsurface soil investigation.

All drainage from the site must be detained to maintain predevelopment runoff conditions, in accordance with Country, State, and Local codes. Erosion control procedures shall meet Country, State, and Local requirements.

Boiler Turbine Building

The plant shall have a building to house the boiler, turbine/generator, and condensing unit, sized to provide adequate horizontal and vertical workspace around the generation equipment.

Shop and Storage Building

The shop and storage building shall be equipped with storage shelves, office space, and a restroom for plant maintenance crew use.

4.0 INSTALLATION

4.1 General

The contractor shall be responsible for all aspects of the facility installation in accordance with these specifications. The contractor shall be responsible for all costs associated with temporary services and work during the entire installation period, including hookup fees and temporary site modifications.

During the entire construction period, the purchaser will have a resident project representative (RPR) and other field staff to observe the performance of the work of the contractor.

The RPR is the purchaser's agent at the site. The RPR shall act as purchaser, directed by and under the supervision of the purchaser, and shall interface with the purchaser regarding the RPR's actions. The RPR's dealings in matters pertaining to the on-site work shall be with the purchaser and contractor. The RPR's dealings with subcontractors shall only be through or with the full knowledge and approval of the contractor.

4.2 Mechanical

All equipment shall be installed in accordance with the equipment manufacturer's recommendations. It is the contractor's responsibility to use the manufacturer's representation where technical assistance is required or when equipment warranties are tied to installation/checkout supervision.

The installation specifications shall be tied to internationally recognized standards wherever possible, such as the ANSI B31.1 Pressure Piping Code, the ASME Section IX Welding Code, etc.

The contractor shall check vendor drawings and operating instructions for any special installation requirements; shall check equipment list for completeness so that the installation sequence may be determined and shipping instructions coordinated; shall determine how construction will schedule and coordinate equipment installation; and shall check for feasibility of preassembling components.

All equipment shall be completely assembled, with all lubrication requirements met, installed, and connected as shown on the construction detail drawings, and shall be fully prepared and made ready for operation. The contractor shall assemble all parts, piece sub-assemblies, and all other items necessary to complete the installation.

Contractor personnel shall comply with all rules and regulations adopted under the most recent issue of the Occupational Safety and Health Administration (OSHA) Guidelines or equivalent World Bank and Russian requirements.

4.3 Civil and Structural Installation

The contractor shall perform all civil/structural installation in accordance with Country, State (Region or Province), and Local regulatory requirements.

The installation specifications shall be detailed with allowable tolerances, etc. to assure the purchaser of proper equipment setting, alignment coupling, anchoring, and arrangement.

All site clearing, grading, excavation, and backfill shall conform to Country, State (Region or Province), and Local erosion and dust control ordinances and be in accordance with good engineering practice.

All installation specifications shall be provided to the purchaser at least 30 days prior to installation.

4.4 Electrical Installation

The contractor shall provide complete standard electrical and instrumentation and controls installation specifications to perform all work 30 days prior to installation of any equipment. The purchaser shall review the installation specifications.

The contractor shall check vendor drawings and operating instructions for any special

installation requirements. The contractor shall also check the equipment list for completeness so that the installation sequence may be determined and shipping instructions coordinated.

The contractor shall determine how equipment is to be handled and temporary support provided, and how construction will schedule and coordinate equipment installation. The contractor shall also check for feasibility of preassembling components.

All equipment shall be completely assembled, installed, and connected as shown on the contractor detail drawings, and shall be fully prepared and made ready for operation. The contractor shall assemble all parts, piece subassemblies, cable, conduit, and all other items necessary to complete the installations. Some of this equipment is listed below.

- Switchyard consisting of generator step-up transformer, oil circuit breakers, disconnect switches, lightning protection, and relaying meters
- Unit substation consisting of transformer and secondary switchgear. Note: A primary disconnect switch is needed for the generator.
- Motor control centers consisting of vertical sections, combination starters, circuit breakers and related distribution and control devices
- Distribution panels and related service transformers
- Control panels
- Freeze-protection systems as required.

5.0 COMMISSIONING

5.1 General

Commissioning shall provide a final assessment of compliance of the completed facility with the contract in regard to the scope and quality of work, and plant performance. Commissioning shall also serve as a mechanism to define corrective actions to gain compliance. In gauging performance, commissioning shall first determine whether the plant is completely functional and ready for acceptance/performance testing. And second, commissioning shall determine the performance possible under normal continuous conditions in a new and clean state, which shall be the basis of any premium or penalty paid associated with performance other than the minimum requirements of the contract.

Commissioning shall include, but not be limited to, the following tasks:

Review and Testing

All civil/architectural work shall be reviewed with regard to scope and quality of work. Work may be reviewed as it is completed, i.e., the facility does not have to be at the completed stage to begin this task.

All mechanical and electrical systems shall be reviewed with regard to scope and quality of work. This shall include a determination of the operable status of all equipment, reliable function of all safety systems, and proper calibration and alignment of all devices. Each major system may be reviewed upon its completion.

Reliable Operation Test

Prior to commencing the reliable operation test, all mechanical and electrical systems must be complete and the purchaser must accept the results of the checkout. The reliable operation test shall demonstrate that all mechanical and electrical systems operate in concert during start-up, shutdown, steady-state firing, and load swings. No specific power output or heat rate is required during the reliable operation test.

Acceptance/Performance Test

Prior to commencing the acceptance/performance test, the results of the reliable operation test must be accepted by the purchaser. First, the acceptance/performance test shall demonstrate that the facility can operate over the design range without resulting in voiding the vendor's warrantee of any single piece of equipment. The maximum range of operation for the boiler firing shall be 110% of MCR down to the minimum load warranted by the contractor. Second, the boiler shall be fired as close as possible to the guaranteed MCR and net power output, and the associated net heat rate shall be determined. All permitting and safety regulations shall be complied with during this performance test, which shall be the basis of determining compliance with the contracted minimum performance.

Commissioning shall be performed solely under the supervision of the contractor, who is fully responsible for all activities and events during the commissioning period. This supervision and responsibility covers the following:

- Scheduling of commissioning activities
- Provision of support staff, equipment, and materials
- Direction of plant operation
- Commissioning procedures and reporting
- Corrective actions.

Tests Prior to Commercial Operation

The following tests shall be performed in compliance with the provisions of the acceptance/performance test prior to the commercial operation of each plant:

- Measuring and protection tests for all equipment
- Power transformer test (prior to load input)
- Switch calibration and load rejection tests.

5.2 Operating Conditions

During all operational tests, the systems and equipment shall be operated in accordance with procedures and under conditions in accordance with the manufacturers' warranties.

5.3 Review and Testing

As a minimum, the contractor shall carry out the following review and testing of the facility and its components:

Checkout of Civil/Architectural Work

All civil/architectural work shall be reviewed for scope and quality with regard to contract requirements and design documents.

Checkout of Mechanical Equipment

All equipment in each system shall be visually inspected for completeness and quality of work. All equipment shall be energized, and its components checked for proper rotation, operation of safety interlocks, flow, etc.

Checkout of Instruments and Controls and Electrical Systems

Each system shall be visually inspected for completeness and quality of work. All wiring, cable, and electrical equipment shall undergo a megger test. All instrumentation elements shall undergo a calibration check. All control loops shall be field-tested for correct action, response, wiring, etc., prior to start-up. All software shall be tested by simulating operating signals.

5.4 Reliable Operation Test

For each system, measurements shall be made to determine if each component is operating under conditions, that do not void the manufacturers' warranties. Also, the actual performance shall be determined and compared with the manufacturers' guarantees. If corrective actions are deemed necessary to improve operations, the contractor shall effect such actions.

In order to pass the reliable operation test, the contractor needs to demonstrate that the system can be operated continuously for at least 120 hours at the guaranteed load point. This test shall also include successful cold and hot start-ups and hot shutdowns of the system before the 120-hour test.

Operators shall keep logs of all events and activities.

5.5 Acceptance/Performance Test

The acceptance/performance test shall be conducted after successful completion of the reliable operation test. No special cleaning or repair shall be allowed prior to the acceptance/performance test.

The facility's overall performance shall be determined under normal operation from a cold start with the boiler firing at 100% of boiler MCR steaming rate and at the resulting net power output. The steaming shall be maintained for at least four hours at the guaranteed

load point. Measurements and calculations shall be performed to determine the net power output and net heat rate, and all parameters especially air quality and safety restricted by permitting agencies.

For each system and its components, measurements and calculations shall be performed to determine the actual performance versus the guaranteed performance, and to determine compliance with warranty restrictions of operating conditions.

In the event that any component is operated in violation of warranty restriction, changes shall be made to assure compliance. In the event that a system's performance does not meet the vendor's guarantee, corrective actions shall be taken to improve its performance. In the event that the facility violates any restriction of air quality permitting, corrective actions shall be taken and the plant must undergo the reliable operation test prior to the acceptance/performance test.

5.6 Special Consideration of Commissioning

Correction Calculations

Correction is permitted for ambient temperature and humidity conditions. The method of calculation of these correction factors must be reviewed and approved by the purchaser. Correction to the performance fuel values is permitted for biomass composition and/or heat value. The method of calculation of these correction factors must be reviewed and approved by the purchaser.

Definition of Net Power Output

The net power output (NPO) is defined as the electrical power produced as measured on the high-voltage side of the transformer. All auxiliary loads are to be provided by the power plant facility.

Definition of Normal Operation

Normal operation is defined as the conditions for which the facility is designed to operate on a continuous basis, including the following restrictions:

- The equipment shall be operated in conformance with the manufacturers' warranties.
- All systems, including users of steam, water, and power, shall be operated in accordance with the O&M manual, i.e., water make-up, material-handling systems, recirculation pumps, auxiliary cooling systems, etc. (shall not be intentionally restricted).
- No restriction shall be placed on any plant auxiliary power load and no load shall be intentionally shutdown.
- The plant is accepted and tested in a new and clean condition and no correction to operation or results shall be made to project fouled performance.

Definition of Net Heat Rate

The net heat rate (NHR) is defined as the ratio of the boiler heat input rate to net power output (NPO). The net heat rate is calculated as follows:

$$NHR = \frac{\text{Boiler Heat Input Rate}}{NPO}$$

where the boiler heat input rate is determined from a heat balance on the boiler.

Because biomass does not have a consistent heating value, and may vary considerably in content, it is impractical to establish the boiler heat input rate from biomass throughput and heat content. Rather, a mass and energy balance shall be performed over the boiler to determine the boiler heat input rate.

Application of Testing Uncertainty

All measurements and calculations result in uncertainty of the calculated net power output and net heat rate.

The contractor shall accept the liability of this uncertainty in the determination of performance and shall account for it in calculating the performance values. The uncertainty of all guaranteed performance values shall be calculated and all calculations presented for review and approval by the purchaser.

List of Questions

1. Amount of waste biomass available in tonnes for electricity generation in Verkhni-Ozerski village excluding the amount used for district heating. If there is a big seasonal variation, please specify in detail.

2. Power demand characterization in Verkhni-Ozerski; (number of households, size of sawmill) and level of service in kWs and kWhrs per household, school, other institutional buildings, and sawmill. Again, please specify the seasonal variations in power demand.

3. Current Ownership structure of the diesel-fuel-to-electricity unit.

4. Proposed ownership structure for the biomass-to-electricity unit.

5. Average moisture content of wood-waste material to be used for electricity generation. Please specify for each season.

6. Estimate for average calorific value for wood to be used for electricity generation.

7. Waste biomass characterization (percent contribution of each type of tree and size of wood chips).

8. Price of diesel fuel paid for electricity generation at Verkhni-Ozerski.

9. Price for biomass fuel to be used for electricity generation at Verkhni-Ozerski.

10. Price of electricity paid by Verkhni-Ozerski households and institutional facilities, also explain to whom consumers pay the electricity bills.

Answers to Questions of Ecotrade, Inc. to Build a 1-MW Thermal Power Station in the Settlement of Verkhni-Ozerski of Arkhangelsk Region

1. The annual amount of wood waste is 15-17 thousand tonnes, out of which an average 8 thousand is used in boilers per year. In 1995 10,000 tonnes was spent.

2. Established capacity of industrial enterprises is 710 kW, and residential is 435 kW. Capacity utilization coefficient in winter is 0.7, in summer 0.4.

3. The owner of diesel power station is joint-stock company "Onegales."

4. The owner of thermal power station will be the same "onegales" joint-stock company.

5. Average Moisture content is 40%.

6. The average heat content of wood wastes is 2,000 kCal/kg.

7. The composition of wood wastes: Birch – 60%, Pine – 20%, Aspen – 20%.

8. Price of diesel fuel is 1,500 rubles/kg.

9. Approximate price of wood wastes is 12-14 thousand rubles/tonne.

10. Production cost of power produced by diesel generators is 669 rubles/kWh, selling price is 733 rubles/kWh and is paid to "Onegales" joint-stock company.

ECOTRADE, Inc.

220 S. Kenwood St., Suite 305, Glendale, CA 91205-1671, USA
Tel.: (818) 240-4500 FAX: (818) 240-4501

October 2, 1996

Russian Ministry of Fuel and Energy
Mr. Pavel Bezrukikh
FAX: 7095 975 2045

Please forward the following questions to the Arkhangelsk Region Administration. We need answers to the questions as soon as possible in order to complete our evaluation of the biomass-to-energy project in Verkhni-Ozerski village.

1. What is the source, quantity and required quality of water treated for district heating and diesel engine use in Vekhni-Ozerski?

2. What are the environmental standards (norms) for air emissions and water and solid discharge for a new biomass-to-energy project in Verkhni-Ozerski?

3. How and where the ash from district heating boilers is being disposed?

4. Budget cost for 10,000 volt (or other appropriate voltage) line extension from:

   a) Verkhni-Ozerski village to Purnema (Пурнема) village
   b) Purnema village to Liamtsa (Лямца) village
   c) Verkhni-Ozerski village to Una (Уна) village
   d) Una village to Luda (Луда) village
   e) Malozhma (Маложма) village to Verkhni-Ozerski village

   Please include substation and transformer costs as required. Please also estimate line losses for each increment a) to e)

5. What is the name and population of other villages in the Arkhangelsk Region that similar to Verkhni-Ozerski are not connected to electric grid but have established saw-mill enterprises?

Thank you in advance for your cooperation and prompt response.

Sincerely,

Serge Adamian

Answers to Questions Regarding the Construction of Thermal Power Station of 1000 kW

1. Water source – Lake 1x1km

2. Qualitative data of water based on readings of the Onega sanitary-epidemiological station.

Cations	mg/l	Mg/equiv/l	Anions	Mg/l	Mg-equiv./l
Ca	2.0	0.10	HCO_3	36.6	0.6
Mg	2.43	0.20	SO_4	11.3	0.23
(Na + K)	16.8	0.73	Cl	7.0	0.20
Fe	-	-	NO_3	-	-
F	-	-	NO_2	-	-
	$\sum_k = 1.03$			$\sum_a = 1.03$	

Alkalinity of water	0.6 mg-equiv./l
Hardness	0.3 mg-equiv./l
Carbonate hardness	0.3 mg-equiv./l
Calculated dry residue	68 mg/l
Coloring	30%
Transparency	30%
Turbidity	9.92 mg/l
Key to abbreviations	mg/l (milligram/liter) mg-equiv./l (milligram-equivalent/liter)

3. Calculated water usage for heating considering losses – 135 m^3.

4. Currently three diesel generators of 500 kW 64M2534 type are used for energy supply.

5. Standards for air pollution, water loss, and waste disposals for the new project will be determined individually on the basis of submitted documents and calculations of discharges. I have reason to believe that there will be no obstacles in obtaining permits for discharges.

6. Ashes can be used on individual gardens and plantations. However, we cannot even approximately name how much income that will generate.

7. Roughly estimated costs of projected line extension – 10 kV

Name of Line	Distance km	Transform. p/c	Capacity p/c kW	Cost mil. rub.	Total cost mil. rub.
Verkhni-Ozersk Purnema	30	1	180	30.0	1,380.0
Purnema-Lyamtsa	25	1	100	18.0	1,150.0
Verkhni-Ozersk Una	20	1	100	18.0	1,000.0
Una-Luda	4	1	100	18.0	200.0

8. Losses in the lines 10 kV, aluminum conduits

Name of LEP	Distance km	Section of the conduit mm^2	Specific active resistance ohm/km	Specific reactive resistance ohm/km	Losses of electric power %
Verkhni-Ozersk-Purnema	30	50	0.65	0.338	5.06
Purnema-Lyamtsa	25	35	0.85	0.346	1.59
Verkhni-Ozersk-Una	20	50	0.65	0.338	1.38
Una-Luda	4	35	0.85	0.346	0.03

9. Settlements of Onega region with autonomous sources of electric power supply.

Zolotukha	750 people
Kusha	450 people
Unezhma	580 people

REPORT DOCUMENTATION PAGE

Form Approved
OMB NO. 0704-0188

Public reporting burden for this collection of information is estimated to average 1 hour per response, including the time for reviewing instructions, searching existing data sources, gathering and maintaining the data needed, and completing and reviewing the collection of information. Send comments regarding this burden estimate or any other aspect of this collection of information, including suggestions for reducing this burden, to Washington Headquarters Services, Directorate for Information Operations and Reports, 1215 Jefferson Davis Highway, Suite 1204, Arlington, VA 22202-4302, and to the Office of Management and Budget, Paperwork Reduction Project (0704-0188), Washington, DC 20503.

1. AGENCY USE ONLY (Leave blank)	2. REPORT DATE	3. REPORT TYPE AND DATES COVERED
	February 1998	subcontract

4. TITLE AND SUBTITLE

Rural Electrification: Waste Biomass Russian Northern Territories

5. FUNDING NUMBERS

DO063040

6. AUTHOR(S)

Serge Adamian

7. PERFORMING ORGANIZATION NAME(S) AND ADDRESS(ES)

ECOTRADE, Inc.
220 S. Kenwood St. Suite 305
Glendale, CA 91205-1671

8. PERFORMING ORGANIZATION REPORT NUMBER

SR-210-24040

9. SPONSORING/MONITORING AGENCY NAME(S) AND ADDRESS(ES)

National Renewable Energy Laboratory
1617 Cole Boulevard
Golden, Colorado 80401-3393

10. SPONSORING/MONITORING AGENCY REPORT NUMBER

11. SUPPLEMENTARY NOTES

12a. DISTRIBUTION/AVAILABILITY STATEMENT

National Technical Information Service
U.S. Department of Commerce
5285 Port Royal Road
Springfield, VA 22161

12b. DISTRIBUTION CODE

UC Category 1310

13. ABSTRACT

The objective of this report is to evaluate the economic and technical feasibility of replacing conventional distillate fuel (diesel) with local waste biomass in the village of Verkhni-Ozerski, in the Russian Northern Territories. The pre-feasibility study demonstrates that the project merits continuation and the performance of a full feasibility analysis.

14. SUBJECT TERMS

Biomass; resource assessment; pilot project; local infrastructure development; environmental impacts; availability of local, national, and international financing mechanisms; scale-up

15. NUMBER OF PAGES

16. PRICE CODE

17. SECURITY CLASSIFICATION OF REPORT	18. SECURITY CLASSIFICATION OF THIS PAGE	19. SECURITY CLASSIFICATION OF ABSTRACT	20. LIMITATION OF ABSTRACT
unclassified	unclassified	unclassified	