SERI/TP-253-1830
UC Category: 62 a, b, c, e

A Detailed Design Procedure for Solar Industrial Process Heat Systems: Overview

Charles F. Kutscher

December 1982

To be presented at the ASME
Solar Energy Division 6th Annual
Technical Conference
Orlando, Florida
19–21 April 1983

Prepared Under Task No. 1387.31
WPA No. 351

Solar Energy Research Institute
A Division of Midwest Research Institute

1617 Cole Boulevard
Golden, Colorado 80401

Prepared for the
U.S. Department of Energy
Contract No. EG-77-C-01-4042

Printed in the United States of America
Available from:
National Technical Information Service
U.S. Department of Commerce
5285 Port Royal Road
Springfield, VA 22161
Price:
Microfiche $3.00
Printed Copy $ 4.00

NOTICE

A DETAILED DESIGN PROCEDURE FOR SOLAR INDUSTRIAL PROCESS HEAT SYSTEMS: OVERVIEW

C. F. Kutscher
Solar Energy Research Institute
Golden, Colorado

ABSTRACT

A large number of handbooks have been written on the subject of designing solar heating and cooling systems for buildings.

Design Approaches for Solar Industrial Process Heat Systems, published in September 1982, addresses the complete spectrum of problems associated with the design of a solar IPH system. This work presents a highly general method, derived from computer simulations, for determining actual energy delivered to the process load. Also covered are siting and selection of subsystem components, cost estimation, safety and environmental considerations, and installation concerns. This paper is intended to give an overview of the design methodology developed and provide some specific examples of technical issues addressed.

NOMENCLATURE

A_c	collector area (m^2)
A_x	heat exchanger area (m^2)
C_c	cost of collectors ($\$/m^2$)
C_x	cost of heat exchanger ($\$/m^2$)
$F_R U_L$	product of collector heat removal factor and loss coefficient (W/m^2-deg C)
$F_R \eta_O$	collector optical efficiency
F_S	a correction factor which accounts for the presence of a heat exchanger or the particular effects of an unfired-boiler or flash-steam system ($F_S = 1$ for a direct hot water system with no heat exchanger)
F_x	DeWinter heat exchange factor
$\overline{I}$	average annual irradiation: total horizontal for flat plates and evacuated tubes, direct normal for troughs (W/m^2)
I_b	beam irradiance
I_h	global irradiance on a horizontal surface
$(Mc_p)_{coll}$	thermal capacitance of collectors
$(\dot{M}c_p)_{load}$	thermal capacitance load flow rate
$(Mc_p)_{pipe}$	thermal capacitance of piping
$(Mc_p)_{stor}$	thermal capacitance of storage
N_d	number of days per year the storage tank will be hot and lose heat
N_{oper}	number of days of system operation per year
$\dot{q}_c$	average hourly energy collection (during daylight hours) for the year (W/m^2)
$\dot{q}_{c,ideal}$	energy collection rate for a solar system with infinite storage (W/m^2)
$\dot{Q}_L$	heat loss rate (W)
$\dot{Q}_{load}$	process load energy use rate
T_a	ambient temperature (deg C)
$\overline{T}_{ad}$	average annual daytime ambient temperature (deg C)
$\overline{T}_{an}$	average nighttime ambient temperature (deg C)
T_{in}	load return temperature (or saturated steam temperature) (deg C)
$T_{l,r}$	load return temperature
T_{set}	temperature set point for recirculation freeze protection (deg C)
UA_i, UA_o	UA values of pipes going to and from collectors (W/m^2-K)
U_o	heat exchanger overall heat transfer coefficient based on exterior tube surface (W/m^2-deg C)
U_{stor}	overall heat-loss coefficient for storage tank (W/m^2-deg C)

INTRODUCTION

In 1976, the U.S. Department of Energy began funding a number of solar industrial process heat (IPH) field tests. SERI began supporting this program in 1978 by providing technical support during design reviews and by specifying data acquisition (1) and monthly performance reporting requirements (2). SERI also studied and reported the operational results of the first seven hot water and hot air projects (3).

To help system designers avoid mistakes made in earlier projects and improve the quality of their designs, SERI, after soliciting input from other DOE laboratories and industry, published a document containing basic qualitative design guidelines (4). The next obvious need was a detailed quantitative design handbook similar to those previously prepared for solar hot water, space heating, and cooling applications of buildings (for example, Refs. 5 and 6).

Several recent publications have addressed part of the problem. One report (7) provides a simple procedure for estimating energy collection for a hot water preheating system containing no storage. Another (8) provides a computer-generated design tool for predicting energy collection of a parabolic trough array supplying heat to an unfired-boiler system. And a third (9) describes a means for predicting energy collection by an array of parabolic trough or stationary collectors for hot water and unfired-boiler systems in Texas (based on results for three Texas cities).

The design handbook discussed in this paper, Design Approaches for Solar Industrial Process Heat Systems published in September 1982 (10), covers not only energy collection but also provides a means of predicting energy actually delivered to the load. It also describes in detail the other important aspects involved in the design of a solar IPH system. Items covered are suitability assessment, configuration alternatives, energy collection/delivery, energy transport systems (piping, fluids, pumps, valves, heat exchangers, and storage), controls, installation/startup, economics and costing, and safety and environmental concerns.

The arrangement of the handbook allows the designer to first devise a rough conceptual design (choosing a system configuration and collector type and estimating energy collection) to determine feasibility and then create the preliminary design (detailed energy calculations and sizing of subsystem components). This paper summarizes the technical issues addressed in the various sections of the handbook.

SUITABILITY ASSESSMENT

In considering the use of solar energy to supply heat for an industrial process, it is useful to conduct a brief preliminary study to determine whether a solar energy system might be feasible. Environmental factors, such as amount of solar radiation and (to a lesser extent) ambient temperatures, are obvious influences. Not as obvious are the effects of plant effluents and other atmospheric pollutants on collector performance, particularly in the case of concentrators. Exposure testing of sample materials at the potential site is highly recommended.

Process factors relevant to the performance of a solar IPH system include load-return temperature, load schedule, ease of interface, and location of available land. Low-temperature loads that operate seven days per week and have high demand during daylight hours are ideal.

Of course, economics plays a major role. If the fuel currently being used to supply the process heat is expensive or subject to curtailment, a solar energy system will have a higher rate of return. A plant that has already incorporated all possible economical energy conservation measures is more likely to consider the use of solar energy to further reduce costs.

Finally, the individual company will greatly determine the success of the project. An in-house engineering design team could cut design costs, and an available maintenance staff can ensure smooth operation. Above all, management must have a strong interest in the success of the project.

SYSTEM CONFIGURATION

Solar hot water and steam systems can be configured in a variety of ways. Process hot water can flow directly through the collectors or be heated by a heat exchanger. The following freeze-protection systems are possible: closed-loop use of a nonfreezing fluid,

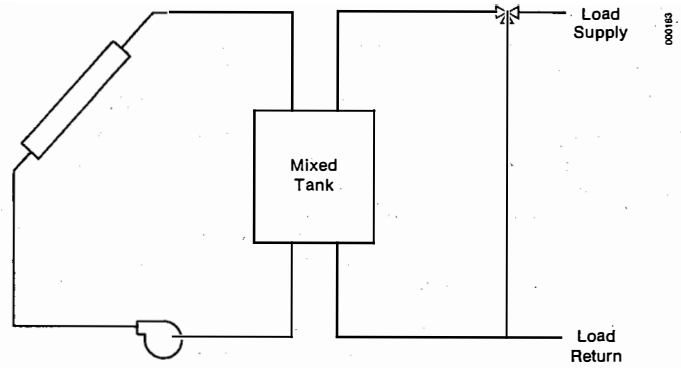

Fig. 1a Four-Pipe Storage Configuration

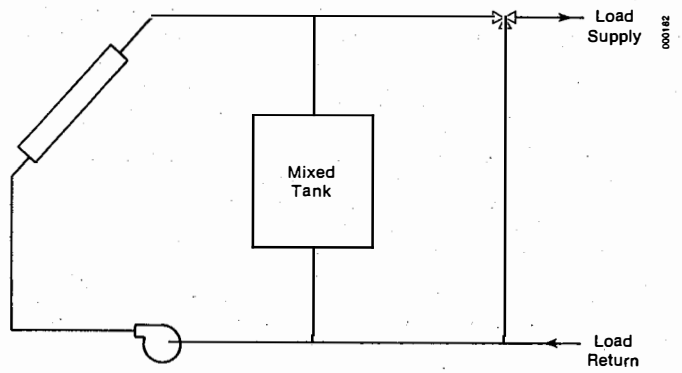

Fig. 1b Two-Pipe Storage Configuration

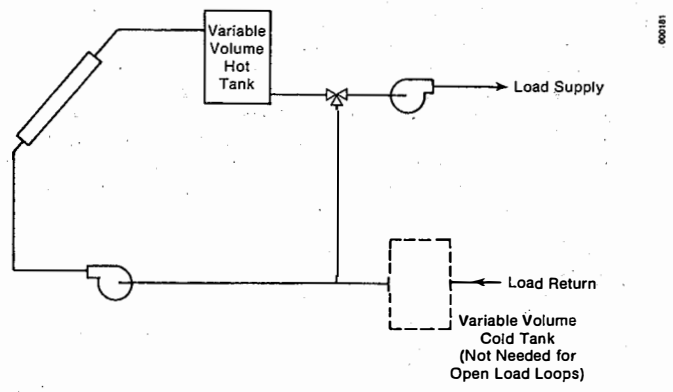

Fig. 1c Variable-Volume Storage Configuration

drain-out (disposal) of fluid if the collectors are pressurized, or drain-back to a solar storage tank or small reservoir. In addition, nighttime circulation can be used in moderate climates.

If storage is used, the typical arrangement of a single tank with two inlets and two outlets is simple to control and is fine for a small load ΔT (see Fig. 1a). The inlet and outlet pipes can be combined into one each allowing for storage to be bypassed as shown in Fig. 1b. This system offers somewhat better performance but requires additional controls to be fully optimized.

Performance can be improved further by maintaining a thermocline in the tank. This can be difficult; however, an alternative is to use a variable-volume tank, as shown in Fig. 1c. Whether or not there is a load demand, load water can flow through the collectors to be heated and stored in the variable-volume tank. This keeps the collector inlet temperature at the absolute minimum, thus maximizing array efficiency. (If the load loop uses recirculating water, a variable-volume tank on the collector inlet side is

needed to store load-return fluid.) In a variable-volume tank design, the proper collector flow rate depends on the load requirement but should be adjusted throughout the year as the hours of daylight change.

Steam systems can be configured with an unfired boiler or a flash tank as shown in Figs. 2a and 2b. In an unfired-boiler configuration, a high-temperature heat transfer fluid is heated in the collectors and heat is transferred to the feedwater in a boiler. In the flash-tank configuration, pressurized water heated in the collectors is passed across a throttling valve, where it drops in pressure and flashes to steam in the flash tank.

If storage is desired for an unfired-boiler system, a combined oil/rock storage is probably best to save on the costs of oil. Simulations of unfired-boiler systems using parabolic troughs with the SOLIPH computer model (11) indicate that the thermocline in such a tank improves performance by only about 5% over that of a mixed tank. This is because the return oil temperature from the unfired boiler is not usually far below the steam saturation temperature, and the efficiency of the troughs is relatively insensitive to the range of temperature that the thermocline would provide. A flash-tank system would not have storage other than the small inventory in the flash tank.

The handbook also discusses how the process and solar system can be interfaced. Using the collectors to preheat the auxiliary boiler maximizes collector efficiency. Because hot water IPH applications typically have constant load-return temperatures, a series configuration (or parallel with bypass) performs better than a parallel system (see Fig. 3). On the other hand, in an unfired-boiler system, where essentially no preheating is done and most heat transfer occurs at the saturated steam temperature, a parallel configuration is ideal.

A frequent concern in the design of solar IPH systems is that the reduced firing rate of the auxiliary boiler in a series configuration will result in reduced efficiency. The handbook authors found, however, that the drop in boiler efficiency at low firing rates is very small. In fact SOLIPH runs show that, in a system containing storage, total fuel

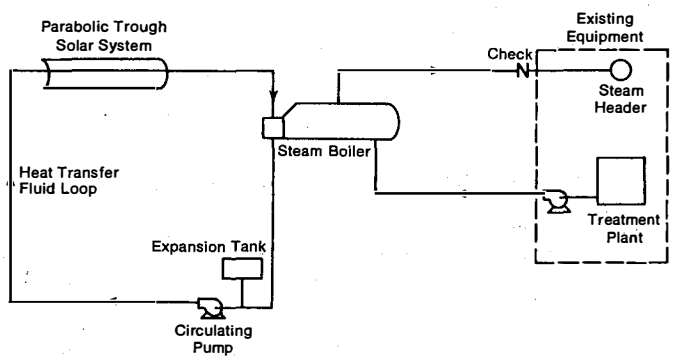

Fig. 2a Unfired-Boiler Steam-Generating System

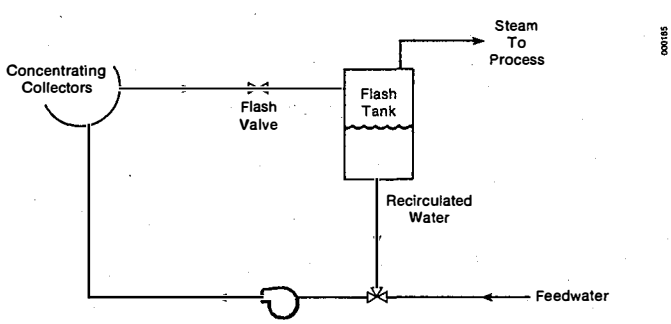

Fig. 2b Flash-Steam Solar System

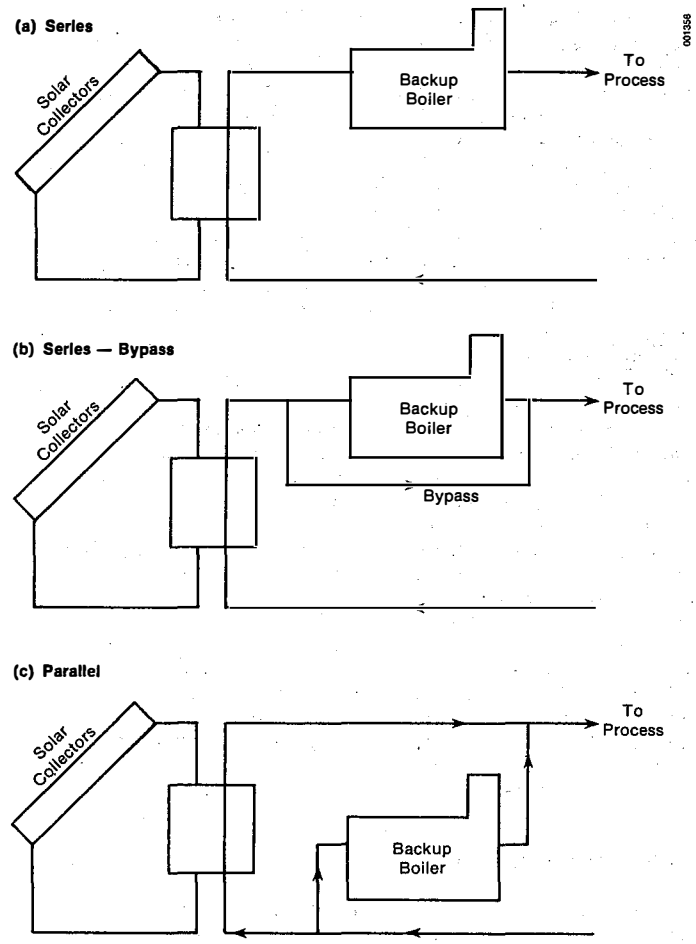

Fig. 3 Configuration of Solar IPH Systems and Backup Boilers

savings actually increase as the minimum boiler firing rate is reduced because this allows the storage temperature to be drawn down lower, thereby increasing collector efficiency. This is shown for several test cases in Fig. 4.

ENERGY COLLECTION/DELIVERY

Detailed descriptions of flat-plate, evacuated-tube, and parabolic trough collectors are given in the handbook. Thousands of runs were made of the hour-by-hour simulation program SOLIPH for 26 TMY (Typical Meteorological Year) sites and a range of collector optical efficiencies and heat-loss coefficients (12). Empirical performance correlations were developed by performing a multivariable regression analysis of the computer output. (Results are shown in Fig. 5.) For a given collector and climate, the user calculates the value of the intensity ratio,

$$\frac{F_R U_L \left(T_{in} - \overline{T}_{ad}\right)}{F_R \eta_o \overline{I}} , \qquad (1)$$

where

$F_R\eta_o$ = collector optical efficiency

$F_R U_L$ = slope of collector efficiency curve (W/m^2-deg C)

$\overline{I}$ = average annual irradiation: total horizontal for flat plates and evacuated tubes, direct normal for troughs (W/m^2)

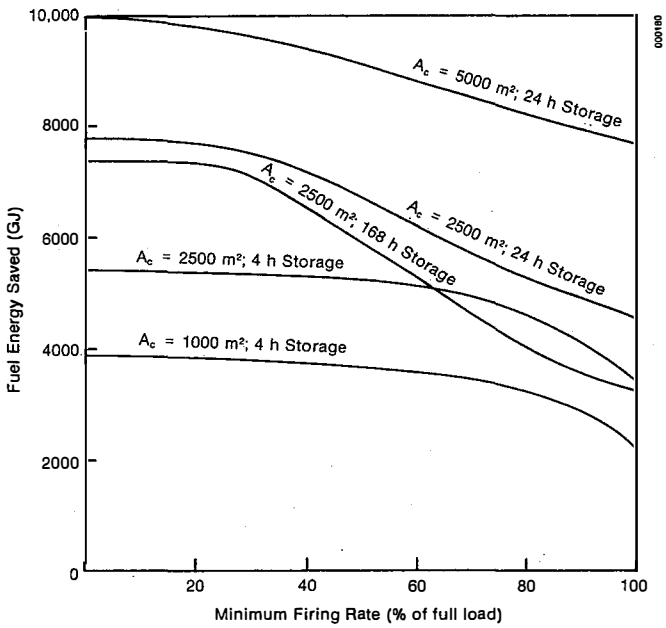

Fig. 4 Effect of Firing Rate of Auxiliary Boiler on Annual Energy Savings for a Mixed-Tank System

T_{in} = load-return temperature (or saturated steam temperature) (deg C)

$\overline{T}_{ad}$ = average annual daytime ambient temperature (deg C).

Using this as the abcissa in the graph, the user then moves vertically to the curve appropriate for the collector type and site latitude. The ordinate is then $\dot{q}_c/F_S F_R \eta_o \overline{I}_h$ for flat plates and evacuated tubes and $\dot{q}_c/F_S F_R \eta_o(\overline{I}_b + 50)$ for troughs, where

$\dot{q}_c$ = average hourly energy collection (during daylight hours) for the year (W/m^2)

F_S = a correction factor which accounts for the presence of a heat exchanger or the particular effects of an unfired-boiler or flash-steam system ($F_S = 1$ for a direct hot water system with no heat exchanger).

Multiplying the ordinate by the denominator gives $\dot{q}_c$. Multiplying $\dot{q}_c$ by 4380 (number of daylight hours in a year) and the collector area gives the annual energy collection of an ideal system (infinite storage or constant collector inlet temperature).

Figure 5 assumes typical incidence angle modifiers for the various collector types, but a means is described in the handbook for correcting the η_o value based on the incidence angle modifier curve of the collector chosen. In addition, a simple modification of the $F_R\eta_o$ and F_RU_L values allows collector array supply and return piping losses and daytime storage losses to be included. Corrections for row-to-row shading losses and parabolic trough end losses are also provided.

A simple method allows the user to calculate the largest collector area possible before storage is needed. Larger collector areas would require energy dumping, and the value of $\dot{q}_c$ would actually be the energy delivered by a system with infinite storage. To account for storage effects, several graphs are provided which cover the three collector types and two load profiles: 8 h/day, 7 days/week and 24 h/day, 7 days/week. (Graphs for a 5-day/week profile are being developed.) An example is shown in Fig. 6.

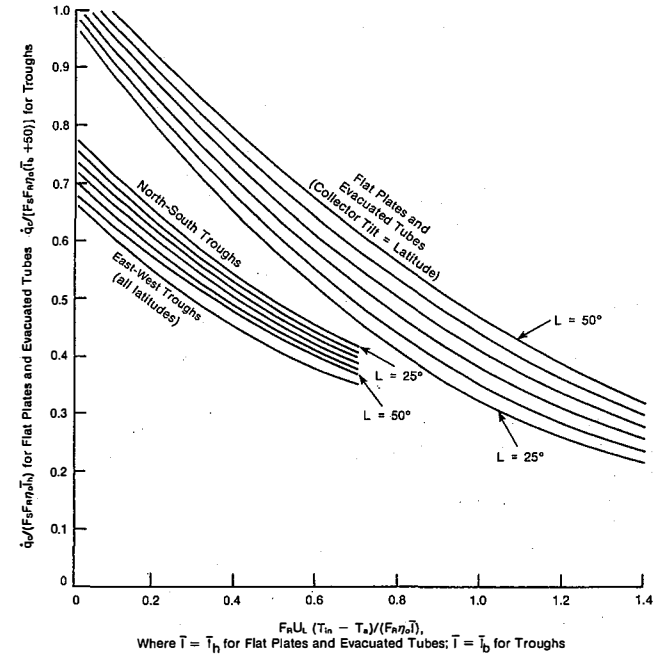

Flat Plates and Evacuated Tubes:

$$\dot{q}_c/(F_S F_R \eta_o \overline{I}_h) = 0.8813 - 1.095 \cdot X + 0.3905 \cdot X^2 + 0.003655 \cdot L + 0.006785 \cdot L \cdot X - 0.004602 \cdot L \cdot X^2$$

East-West Parabolic Troughs:

$$\dot{q}_c/[F_S F_R \eta_o (\overline{I}_b + 50)] = 0.6688 - 0.6745 \cdot X + 0.3166 \cdot X^2$$

North-South Parabolic Troughs:

$$\dot{q}_c/[F_S F_R \eta_o (\overline{I}_b + 50)] = 0.8810 - 0.8117 \cdot X + 0.3130 \cdot X^2 - 0.003919 \cdot L + 0.003864 \cdot L \cdot X - 0.001484 \cdot L \cdot X^2$$

Where L = latitude in degrees
$X = F_R U_L (T_{in} - T_a)/(F_R \eta_o \overline{I})$
Use $\overline{I} = \overline{I}_h$ for Flat Plates and Evacuated Tubes
$\overline{I} = \overline{I}_b$ for Troughs

Fig. 5 Graphical Determination of Yearly Average Energy Collection Rate (W/m^2) During Daylight Hours for Unshaded Flat Plates, Evacuated Tubes, and Parabolic Troughs as a Function of Intensity Ratio

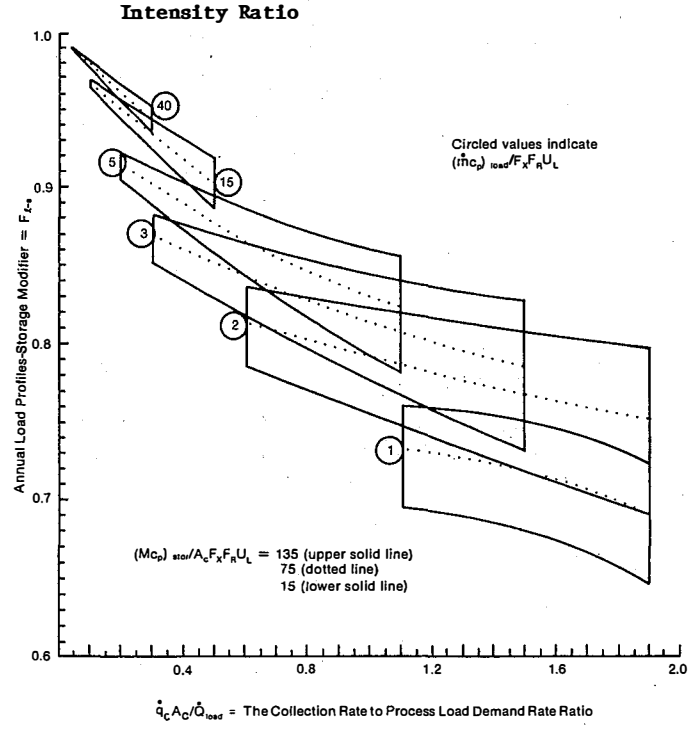

Fig. 6 Annual Recirculation System Storage--Load Modifier for Flat Plates
(Three-shift load profile [24 h/day] operating seven days per week)

The user calculates $\dot{q}_{c,ideal} A_c/\dot{Q}_{load}$, the ratio of the average energy-collection rate by an infinite storage system to the average load-demand rate to get the abcissa. He must also determine two other quantities:

$$\frac{(Mc_p)_{stor}}{A_c F_x F_R U_L} \text{ and } \frac{(\dot{M}c_p)_{load}}{A_c F_x F_R U_L} , \qquad (2)$$

where

$(Mc_p)_{stor}$ = thermal capacitance of storage

$(\dot{M}c_p)_{load}$ = thermal capacitance load flow rate.

The storage size, collector loss coefficient, and the extent to which the load is removing stored energy all affect collector performance.

The corresponding ordinate gives a correction factor that, when multiplied by the energy collection for the infinite storage system, will give the actual energy collection for finite storage. By trying different values of $(Mc_p)_{stor}$ and comparing the resulting energy collected with storage cost, one can iteratively determine an optimum storage size.

Although steady-state piping losses can be included as part of the energy-collection calculation, overnight heat losses and heat losses from a recirculation freeze-protection system must be determined. Studies performed by the handbook authors indicate that in a correctly installed, well-insulated piping system, the pipes will not lose all of their heat overnight. Loss of half of the stored heat is a conservative assumption. Assuming that the collectors will cool down all the way to ambient temperature overnight is conservative for evacuated-tube collectors and realistic for the others. Finally, it is reasonable, though slightly conservative, to assume that a properly insulated storage tank will lose heat overnight at the rate of $U_{stor} A_{stor}(T_{1,r} - T_a)$, where $T_{1,r}$ is the load-return temperature. Thus,

$$\text{overnight heat loss} = \frac{\sum (Mc_p)_{pipe}(T_{1,r} - \overline{T}_{an}) N_{oper}}{2}$$

$$+ \sum (Mc_p)_{coll} (T_{1,r} - \overline{T}_{an}) N_{oper}$$

$$+ U_{stor}A_{stor} (T_{1,r} - T_a) 16 N_d , \qquad (3)$$

where

N_{oper} = number of days of system operation per year (300 is a conservative assumption)

N_d = number of days per year the storage tank will be hot and lose heat (365 is a conservative assumption)

T_{an} = average nighttime ambient temperature.

T_a = average temperature outside storage tank.

The factor 16 in the final term is the average number of nonoperational hours per day that the storage tank loses heat.

For systems using nighttime circulation for freeze protection, the average heat loss rate, when the system is in operation, can be conservatively expressed as:

$$\dot{Q}_L = \frac{(UA_i + U_L A_c + UA_o)(T_i - T_{set})}{\ln(T_i - T_a) - \ln(T_{set} - T_a)} , \qquad (4)$$

where

$\dot{Q}_L$ = heat loss rate (W)

T_a = ambient temperature when freeze protection is used (deg C)

T_i = recirculation fluid temperature (deg C)

UA_i, UA_o = UA values of pipes going to and from collectors (including field pipes) (W/K)

U_L = heat loss coefficient of collectors (W/m^2-K)

A_c = collector area (m^2)

T_{set} = temperature set point for recirculation (deg C)

The value of $\dot{Q}_L$ must be multiplied by the number of hours each year that the freeze-protection system will be used. Since the set point will be above 0 deg C, this will be a little higher than the number of hours of freezing temperatures per year. Since the number of days below freezing is readily available for most sites, a correlation between hours of freezing per year and freezing days was developed to allow the user to estimate the total annual freeze-protection loss.

For all calculations we have assumed that the solar energy will be completely utilized by the process and the collectors will never be down for repairs during sunlight hours. The terms utilization and availability account for deviations from this ideal situation. The handbook shows how to estimate these effects. When one multiplies utilization by availability, one gets the overall system capacity factor. Multiplying the capacity factor by the energy delivered, as calculated above (energy collection minus losses), results in a more realistic estimate.

ENERGY TRANSPORT SYSTEM

Piping

The various field piping layouts shown in Fig. 7 (direct return, reverse return, and center feed) are discussed in the handbook. (Note that in the reverse return system the extra piping is on the cold side to minimize heat losses.) It is recommended that pipes be sized to the erosion-corrosion velocity limit, since economic optimization studies have resulted in velocities greater than this reasonable value. Typical thicknesses of pipe insulation are given as is a means for determining the economically optimum insulation thickness. Tables are supplied that give the UA values for different pipe sizes and insulation thicknesses. These UA values allow the calculation of steady-state and overnight piping losses.

Heat Transfer Fluids

Many IPH system designers have spent a great deal of time evaluating heat transfer fluids. Advantages and disadvantages of the various heat transfer fluids are discussed in the handbook, and heat transfer efficiency factors (HTEF) are given. A complete appendix of fluid properties is included.

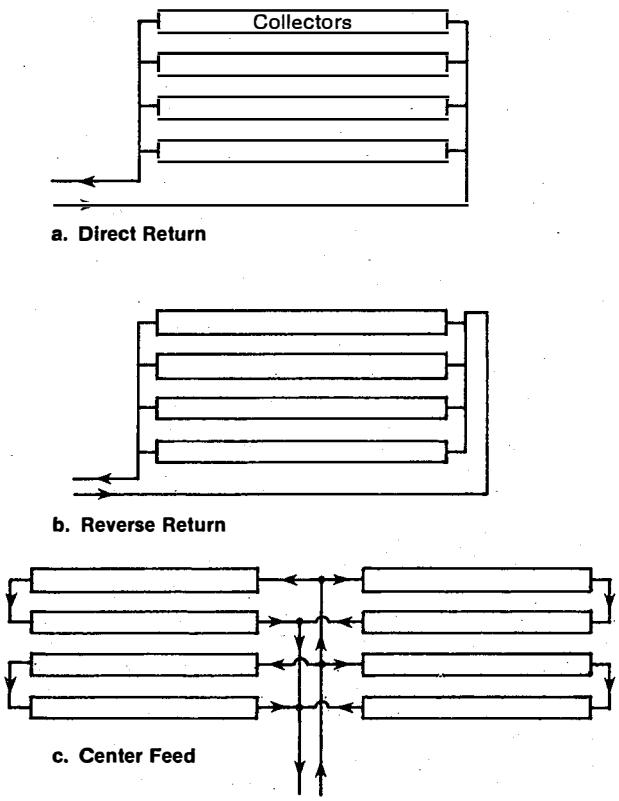

Fig. 7 Solar Collector Field Layouts

Pumps

The various types of centrifugal and positive displacement pumps are discussed. A simple graphical method for sizing the pump is given including a calculation of the net positive suction head requirement. The advantage in parasitic power savings of using a variable-speed pump is discussed. IPH system designers have also been reducing parasitic power by using two pumps in parallel as shown in Fig. 8. By using two differently sized pumps, three speeds are possible; each pump can be operated alone or the two can be operated together. This is ideal for situations in which startup head is significantly different from normal operation head.

Valves

Although valve selection for a solar energy system is similar to that for conventional systems, there are some differences. Early solar IPH systems were quite conservative in terms of valve selection. A large number of isolation and throttling valves were used, increasing the incidence of leakage and resulting in large thermal losses. Since maintenance can be performed at the end of the day, one does not need to be able to isolate each collector row. Eliminating isolation valves also reduces the number of pressure relief valves needed. Another means of reducing thermal losses and cost and improving reliability is to use orifice plates instead of balancing valves.

Heat Exchangers

Most of the handbook discussion is based on the use of shell and tube heat exchangers, although the use of plate heat exchangers for avoiding leakage into the process fluid is also discussed. Two tube passes and a single shell pass are recommended for solar application. The optimum flow capacity ratio (collector side to storage side) is given as 0.5 to 0.6. Which fluid is on the tube side and which is on the shell side depends on the situation. Generally, the fluid that is higher in pressure or temperature, is more subject to scaling, or has better heat transfer properties is placed on the tube side. Since these are not always consistent, engineering judgment must often be made.

When the optimum economical heat exchange area is derived, the result is a formulation of costs, collector area, and collector heat loss coefficient as follows:

$$\frac{A_x}{A_c} = \left(\frac{F_R U_L C_c}{U_o C_x}\right)^{1/2} , \qquad (5)$$

where

A_x = heat exchanger area (m^2)

A_c = collector area (m^2)

$F_R U_L$ = product of collector heat removal factor and loss coefficient (W/m^2-deg C)

U_o = heat exchanger overall heat transfer coefficient based on exterior tube surface (W/m^2-deg C)

C_c = cost of collectors ($\$/m^2$)

C_x = cost of heat exchanger ($\$/m^2$).

The optimum area will often result in a DeWinter heat exchanger factor of $F_x = 0.95$, which multiplies the F_R value; i.e., the heat exchanger will cause a 5% reduction in energy collection.

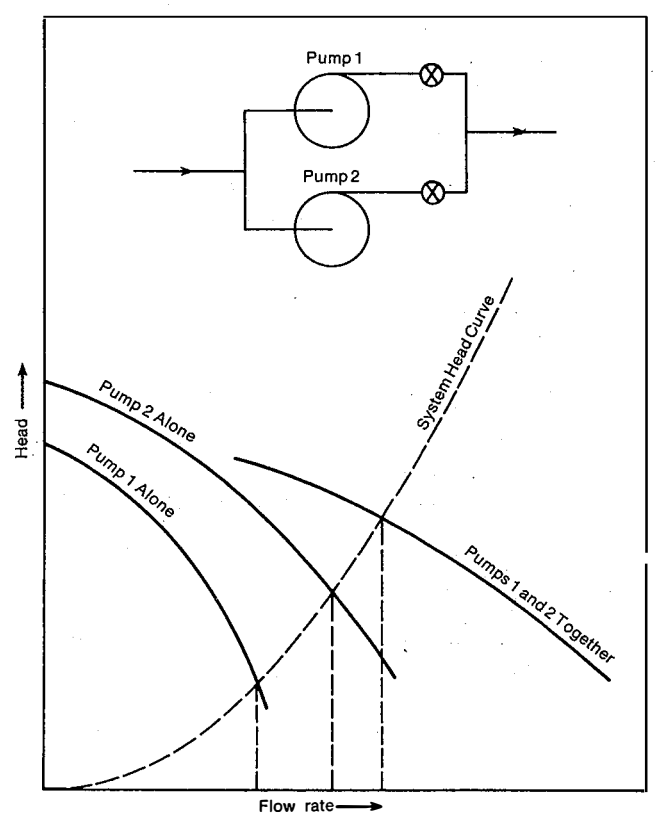

Fig. 8 Head-Flow Curves for Two Centrifugal Pumps in Parallel

Storage

Both sensible and latent heat storage are discussed. The various types of tanks available and suitable storage locations are described. (Actual tank sizing is discussed in the energy collection/delivery section.) Details of a method (13) of determining the optimum amount of tank insulation are described. This is an iterative procedure, which accounts for insulation cost and storage tank temperature.

CONTROLS

The handbook discusses the various types of controllers and control loops. Although constant flow rate is satisfactory for most solar energy applications, the use of variable flow is discussed. Use of a throttling valve with a two-speed pump is the preferred method for controlling outlet temperature. A method is provided for determining the proper controller tuning constants.

Startup/shutdown of collector field tracking or nontracking is discussed. Figure 9 shows a typical tracking control flow chart. Freezing/stagnation protection must also be included in the control capability. To prevent thermal shock damage to evacuated-tube arrays, the control system must lock out pump startup when the collectors have been stagnating in the sun. The control system must be capable of handling emergency conditions, such as low flow, high temperature, or high wind.

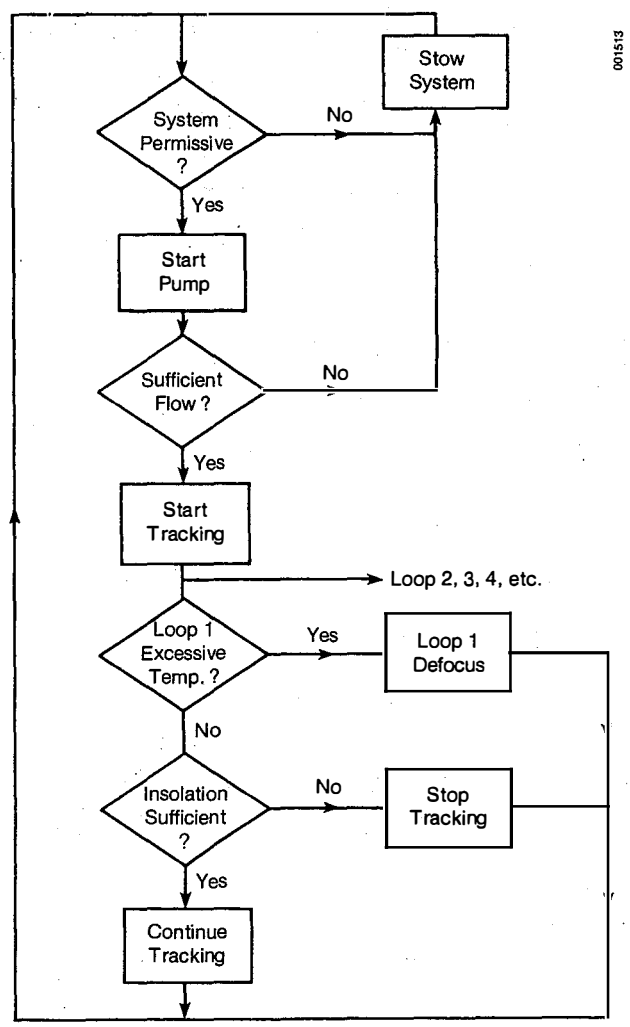

Fig. 9 Typical Tracking Control Flow Chart

Instrumentation and data acquisition are needed to enable the plant owner to assess solar energy system performance. The instruments required to measure flow rate, temperature, pressure, and level are similar to those required for nonsolar systems though longer wire runs are common. To determine solar radiation on the plane of a trough, it is recommended that two pyranometers, one total and one shadow band, be mounted on a trough. The direct radiation is the difference between the two. This system is reliable (provided the row containing the pyranometers is tracking) since the shadow band never needs to be adjusted (as a result of the tracking motion of the collector). Although a pyrheliometer is more accurate, it requires considerably more maintenance.

If the budget permits, a minicomputer is useful for data acquisition since it can instantly provide calculated data, such as collector array efficiency. All equipment should be sheltered from dust, steam, water leaks, vibration, and direct sunlight. Battery backup will maintain memory during power outages.

INSTALLATION AND STARTUP

Considerable attention must be paid to proper installation of the collector array. Flat-plate and evacuated-tube collectors should be covered during installation to prevent stagnation. Allowance for thermal expansion of the piping and provision for adequate slope in drainable systems are important.

Proper installation of line-focus collectors is critical for achieving correct alignment for focusing. The support structure must be very rigid to ensure accurate tracking in windy weather. Flexhoses are a point of weakness, and overflexing and torsional stresses must be avoided.

Solar system piping must have adequate allowance for the thermal expansion associated with wide thermal cycling. Pipe hangers and supports should be isolated from hot pipes to prevent heat loss (see Fig. 10). Valves in an oil system should be installed horizontally so that leaks will not drip into the insulation. Where a leak is possible, a nonwetting insulation such as foamed glass should be employed to reduce the risk of fire.

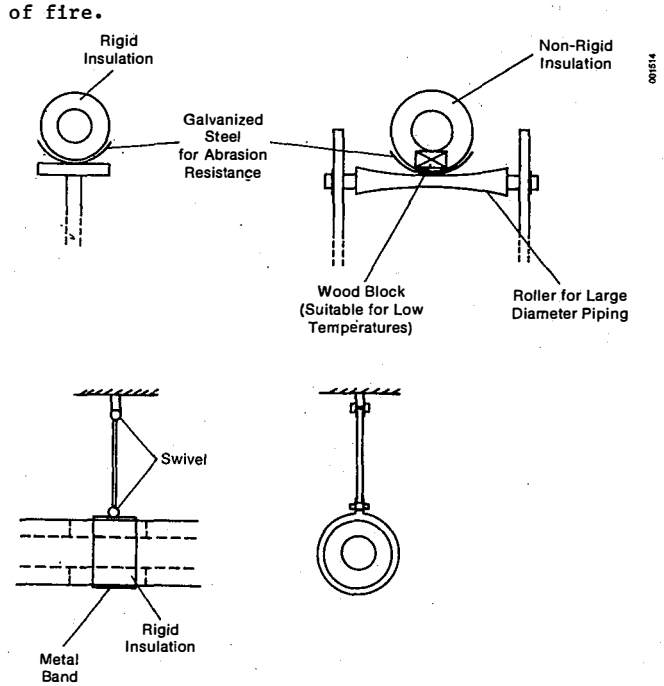

Fig. 10 Examples of Insulation Techniques for Pipe Supports and Hangers

Pumps in solar systems are subjected to severe service due to thermal cycling and daily startup and shutdown. Correct alignment of the pump and motor is critical. Redundant pumps are recommended to protect against system downtime, particularly for high-temperature systems.

Proper checkout and startup procedures are essential to ensure reliable operation. Before initial startup, all lines should be flushed and pumps should be run in. An extra fine screen should be used to protect the pump initially and should be cleaned often. Pressure testing of the system should be performed. Typically, this is done at 150% of system design pressure. A hydrostatic test is preferred over a pneumatic one.

Fluid loading should occur sequentially within zones that can be isolated between valves. Nontracking collectors should be filled during periods of low insolation. If oil is being used, a vacuum should first be pulled on the system or a nitrogen purge should be used.

At the time of startup the system should be carefully checked for leaks, and all instrumentation should be monitored. In the case of trackers, tracking accuracy should be checked and final adjustments made. Simulation of pump failure, overtemperature, power failure, excessive wind speed, insufficient insolation, etc. should be carried out to check for proper system response. When startup is completed, performance testing should be performed during the first days of system operation.

A checkout list is given in the handbook. Proper system checkout should proceed along system lines so that construction logic can be checked. The piping and instrumentation diagram and system specifications should be checked off during inspection.

ECONOMICS AND COSTING

The IPH handbook presents two cost-estimating approaches. The first method uses tabulated results from recent studies of IPH system costs by Mueller Associates, Inc. (14). Table 1 shows typical costs and ranges for various IPH subsystems. Conditions that affect these costs, such as sloped versus flat roof, internal versus external headers, are discussed. Since some economy of scale has been noted in large systems, a graph of correction factor versus collector area is given.

The second method, called modular cost estimating, is based on a computer costing program, ECONMAT, developed at SERI (15). This method calculates total system cost using a number of multiplicative factors applied to the collector cost. One factor accounts for process interface materials, another accounts for engineering design costs, etc.

The method of life-cycle cost analysis described in the handbook was developed by Dickinson and Brown (16). With this method, one first calculates the levelized price of conventional fuel, including fuel escalation and fuel utilization efficiency. The levelized price of solar energy is then calculated based on initial investment, annual energy capacity cost,

Table 1 Conceptual Phase Cost-Estimating Guide
(Includes materials, labor, contractor's overhead and profit in 1981 dollars)

Subsystem	Category	Cost Range	Typical Cost	Units
Collector array	Site-built	65-130	110	$/m^2 collector area
	Liquid flat plate	130-215	160	
	Air flat plate	150-250	195	
	Evacuated tubes	260-325	300	
	Tracking concentrator	215-430	325	
Support structure	Single function	30-160	95	$/m^2 collector area
	Miltiple function	75-270	160	
Energy transport	Hot water	85-185	150	$/m^2 collector area
	Liquid-to-air heat	170-325	235	
	Air heating	55-195	110	
	Steam	110-325	195	
	Heating and cooling	215-540	375	
Storage (liquid)	Unpressurized steel tank	0.20-0.77	0.45	$/liter
	Pressurized steel tank	0.53-1.80	0.77	
	Fiberglass tank	0.45-0.66	0.53	
Storage (air)	Rock bin	110-220	150	$/1000 kg rocks
Electrical and controls	Hot water	20-55	30	$/m^2 collector area
	Liquid-to-air heat	30-95	55	
	Air heating	20-85	45	
	Steam	20-195	130	
	Heating and cooling	45-215	110	
General construction	N/A	0-160	45	$/m^2 collector area

Source: Mueller 1981.

discount rate, O&M costs, and taxes and insurance costs. By equating the levelized prices of conventional fuel and solar energy, the project rate of return can be graphically determined.

Since conventional financing at today's solar energy system prices will often result in a less than favorable rate of return, the handbook briefly discusses alternative financing arrangements. This includes leasing arrangements and limited partnerships. The user is cautioned to consult a qualified tax consultant before pursuing any of these arrangements, however.

SAFETY AND ENVIRONMENTAL ISSUES

Though solar energy systems are generally considered benign, there are certain issues pertinent to this technology that must be addressed. In the area of safety, it should be noted that heat transfer fluids are often highly flammable and, in fact, several fires in IPH systems have occurred. Proper use of insulation and installation of valves are essential.

The fluids can also be highly toxic, and when this is the case care must be taken to prevent contamination of potable water as in a food-process line. Overtemperature and pressure can result in scalding discharge from relief valves, and these should be located or piped in such a way as to safeguard personnel. Physical hazards, such as high-temperature receivers, concentrated sunlight, and ice fall-off from elevated collectors must be addressed.

Potentially damaging environmental impacts of a solar energy system can arise from the use of herbicide to clean a field before collector installation, disruption of the land after installation, and leaks and disposal of heat transfer fluid. A summary of environmental regulations is included in the handbook.

CLOSING REMARKS

This paper merely skims the surface of the design methodology described in the 450-page handbook. Hopefully, this discussion serves as a useful summary for those interested in the design aspects of solar IPH systems, and as a good introduction for those intending to use the handbook.

ACKNOWLEDGMENTS

The author is deeply indebted to his five IPH handbook coauthors: Roger L. Davenport, Douglas A. Dougherty, Randy C. Gee, P. Michael Masterson, and E. Kenneth May. Thanks also to Bill Auer and Jerry Greyerbiehl of the U.S. Department of Energy, who supported this work.

REFERENCES

1. Kutscher, C. F., "Data Acquisition System Guidelines," Memo to SPIPS Contractors, Mar. 1979, Solar Energy Research Institute, Golden, Colo.
2. Kutscher, C. F. and Davenport, R. L., "Monthly Reporting Requirements for Solar Industrial Process Heat Field Tests," SERI/MR-632-714, Sept. 1980, Solar Energy Research Institute, Golden, Colo.
3. Kutscher, C. F. and Davenport, R. L., "Preliminary Operational Results of the Solar Industrial Process Heat Field Tests," SERI/TR-632-385R, June 1981, Solar Energy Research Institute, Golden, Colo.
4. Kutscher, C. F., "Design Considerations for Solar Industrial Process Heat Systems," SERI/TR-632-783, Mar. 1981, Solar Energy Research Institute, Golden, Colo.
5. Hunn, B. D., "ERDA Facilities Solar Design Handbook," ERDA 77-65, Aug. 1977, Los Alamos National Laboratory, Los Alamos, N. Mex.
6. Franta, G. et al., "Solar Design Workbook," SERI/SP-62-308, Aug. 1981, Solar Energy Research Institute, Golden, Colo.
7. Gordon, J. M. and Rabl, A., Design, Analysis, and Optimization of Solar Industrial Process Heat Plants Without Storage, Ben-Gurion University of the Fegen, Israel, 1981.
8. Harrigan, R. W., "Handbook for the Conceptual Design of Parabolic Trough Solar Energy Systems for Process Heat Applications," SAND 81-0763, July 1981, Sandia National Laboratories, Albuquerque, N. Mex.
9. Treat, C. H. et al., "A Design Procedure for Solar Industrial Process Heat Systems in Texas," SWRI Project No. 02-6516, Aug. 1981, Southwest Research Institute, San Antonio, Tex.
10. Kutscher, C. F. et al., "Design Approaches for Solar Industrial Process Heat Systems," SERI/ TR-253-1356, Sept. 1982, Solar Energy Research Institute, Golden, Colo.
11. Kutscher, C. F. et al., "The Development of SOLIPH--A Detailed Computer Model of Solar Industrial Process Heat Systems," SERI/ TP-253-1831, in these proceedings, Solar Energy Research Institute, Golden, Colo.
12. Gee, R., "A Simple Energy Calculation Method for Solar Industrial Process Heat Steam Systems," in these proceedings, Solar Energy Research Institute, Golden, Colo.
13. Cole, R. L. et al., "Design and Installation Manual for Thermal Energy Storage," 2nd ed., ANL-79-15, 1980, Argonne National Laboratory, Argonne, Ill.
14. Mueller Associates, Inc., "The Analysis of Construction Costs of Ten Industrial Process Heat Systems," MAI Report No. 210, MAI Project No. 80-168, 12 Dec. 1980.
15. Stadjuhar, S., "PROSYS/ECONMAT Users' Guide--Solar Industrial Process Heat Feasibility Evaluation," SERI/TR-733-724, Feb. 1982, Solar Energy Research Institute, Golden, Colo.
16. Dickinson, W. C. and Brown, K. C., "Economic Analysis of Solar Industrial Process Heat Systems," UCRL-52814, Rev. 1, 11 Aug. 1981, Lawrence Livermore National Laboratory, Livermore, Calif.