PROPERTY OF
U.S. GOVERNMENT

SERI/TR-631-1283
Volume II
UC Category: 62
DE84000092

SOLAR ENERGY RESEARCH INSTITUTE
Solar Energy Information Center

OCT 16 1984

GOLDEN, COLORADO 80401

Comparative Ranking of Thermal Storage Systems, Volume II

Cost and Performance of Thermal Storage Concepts in Solar Thermal Systems, Phase I

L. J. Dubberly
J. E. Gormely
W. R. Lang
D. J. Liffengren
A. W. McKenzie
R. M. Porter
Stearns-Roger Services, Inc.

November 1983

Prepared under Subcontract No. XP-0-9001-1

Solar Energy Research Institute
A Division of Midwest Research Institute

1617 Cole Boulevard
Golden, Colorado 80401

Prepared for the
U.S. Department of Energy
Contract No. DE-AC02-83CH10093

FOREWORD

This final report was prepared under Subcontract No. XP-0-9001-1 as part of SERI task 1110.00, Systems Analysis of Thermal Storage. The objective of the task is to identify promising thermal storage concepts for solar thermal systems. The approach is to select a specific solar thermal receiver system and applications. The following systems were planned to be evaluated:

- Storage for water/steam cooled collector/receiver.
- Storage for molten salt cooled sensible heat collector/receiver.
- Storage for liquid metal cooled sensible heat collector/receiver.
- Storage for gas cooled sensible heat collector/receiver.
- Storage for organic fluid cooled sensible heat collector/receiver.
- Storage for liquid metal/salt cooled latent heat collector/receiver.

The evaluations were planned to be conducted in three phases as follows:

Phase	Element Number	Receiver Types
1	1	Water/Steam
	4	Gas Cooled
	5	Organic Fluid
2	3	Liquid Metal
3	2	Molten Salt
	6	Liquid Metal/Salt Cooled Latent Heat

Phases 1 and 2 were completed; but due to the federal government policy and funding changes, the planned Phase 3 effort will not be conducted. This report presents part of the data on Phase 1.

These evaluations are the responsibility of SERI. Stearns-Roger Services Inc. (S-R) was sub-contracted to provide part of the data. S-R's responsibility was to provide:

> Consistently calculated cost and performance data on thermal storage concepts integrated into solar thermal systems.

Thus, all concepts are evaluated with the same data base, costing methodology and in the same system applications. The technical differences between the concepts can thus be determined. Because the data are for the cost of concepts yet to be developed, there remains some uncertainty in the data. The relative uncertainty (concept to concept comparison) is less than the absolute cost uncertainty.

After S-R completed their analyses, SERI evaluated the impact on the solar thermal system cost and the sensitivity to various factors. The sensitivity analyses included effects of cost uncertainties, costing methodology, storage use scenarios, operations and maintenance cost uncertainties, economic parameters and comparisons to value. The SERI data are documented separately in:

> Copeland, R. and Ullman, J., "Comparative Ranking of Thermal Storage for Water/Steam, Organic Fluid, and Air/Brayton Solar Thermal Collector-Receiver System" SERI/TR-631-1283.

The report is now in draft form and will be released shortly. The final conclusions and recommendations are in the SERI report; however, that data in general confirms the conclusions of this report and adds other considerations.

Robert James Copeland

Robert James Copeland, Ph.D.
Task Leader, Systems Analysis
of Thermal Storage

Approved for

SOLAR ENERGY RESEARCH INSTITUTE

Frank Kreith

Frank Kreith, Chief
Thermal Research Branch

Barry Butler, Manager
Solar Thermal and Materials Research
Division

SUMMARY

This report describes the work performed by Stearns-Roger Services Inc. and provides cost and performance data on thermal storage concepts in solar thermal systems. The primary objectives of this study are as follows:

- To provide consistently calculated cost data for several thermal storage concepts in several solar thermal systems.
- To provide consistent and realistic performance data for thermal storage concepts integrated into solar thermal systems.
- To provide the above data as projected for a mature technology based upon the state-of-the-art and anticipated improvements in storage technologies.

The scope of this study is limited to the evaluation of thermal storage concepts in the following solar thermal system applications:

- 100 MWe advanced water/steam central receiver solar electric power system.
- Organic fluid receiver for a 400 kWe total energy system, Shenandoah technology.
- 150 MWe closed Brayton cycle solar electric power system.
- Process heat applications using the water/steam and organic fluid receivers specified above, less the power conversion and related equipment.

A concept screening task included a literature review of available data on thermal storage concepts; preliminary screening of potential storage concepts, reducing the total number of concepts to 40; and a final screening review wherein 20 storage concepts were recommended for conceptual design and costing for 1, 6 and 15 hours of storage.

Thermal storage concepts were compared using a present worth of revenue requirements (PWRR)economic method and reflect energy related equipment (tanks, insulation, etc.), power related equipment (pumps, compressors, fans, heat exchangers, etc.), storage media, installation and indirect costs, and first year variable costs, such as O&M, electrical energy and chemical usage.

Water/Steam Receiver (Power)

The PWRR vs. hours of storage for the water/steam receiver (power) application with the storage concepts studied is shown below. As indicated, the reference Caloria/granite-draw salt 2-stage storage concept is most economical below approximately 6 hours storage. Above 6 hours, underground pressurized water (steel-lined cavern) is the best 1st stage choice. Of the latent heat storage systems, the direct contact heat

exchange system with a sensible heat 2nd stage using the phase change media appears attractive. A modified tube intensive heat exchange concept (not shown), utilizing an enhanced heat exchange surface, also appears very cost effective.

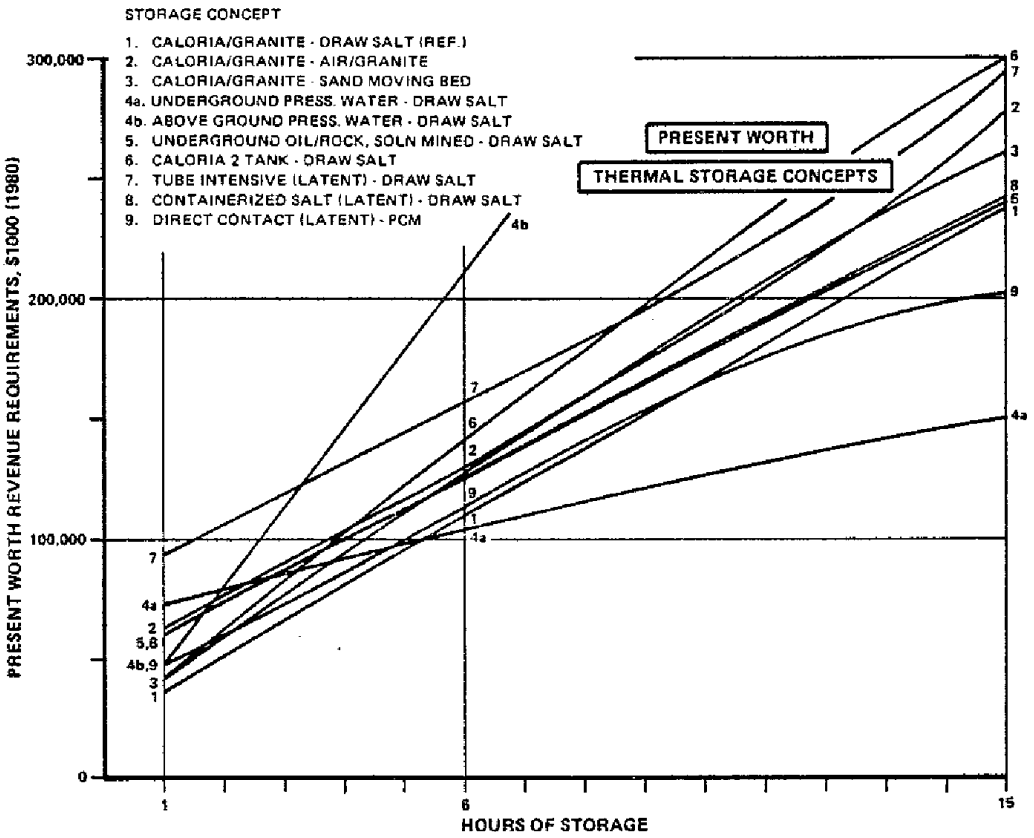

PRESENT WORTH REVENUE REQUIREMENTS, WATER/STEAM RECEIVER (POWER)

Water/Steam Receiver (Process Heat)

For the water/steam receiver process heat cases, supplying 288°C (550°F) saturated steam, the cost summary is shown below. For this specific application, underground pressurized water in a steel-lined cavern is the most economic by a wide margin.

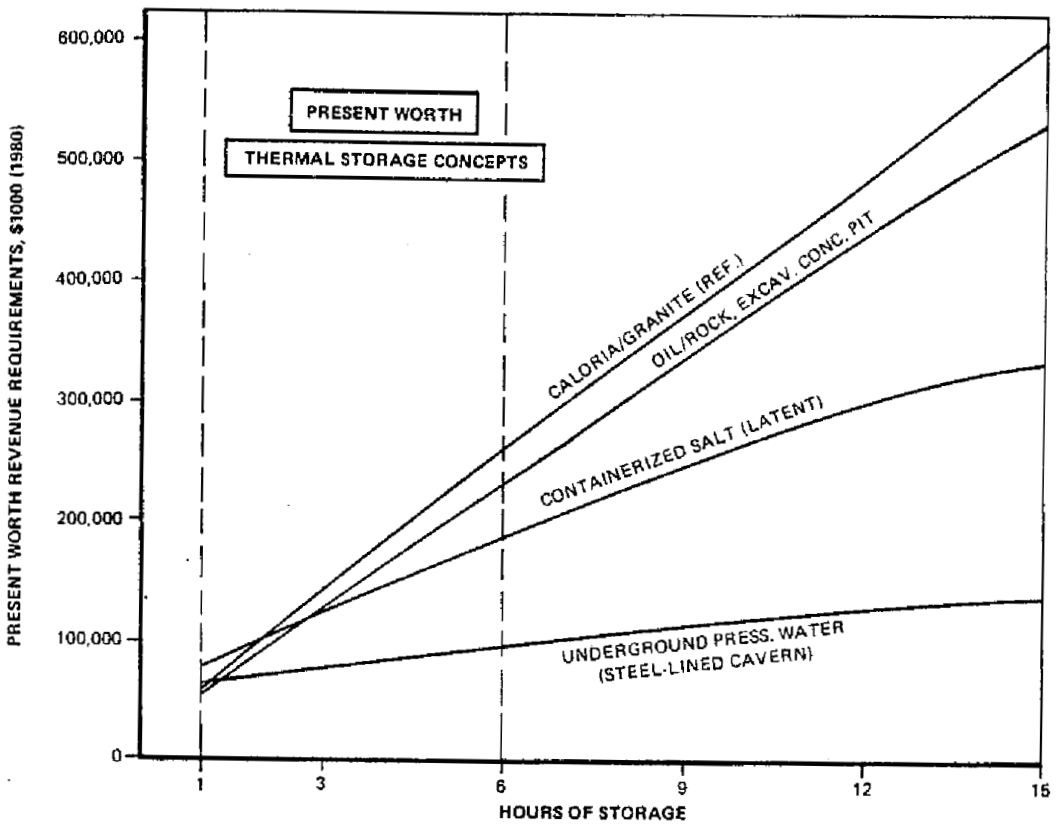

PRESENT WORTH REVENUE REQUIREMENTS,
WATER/STEAM RECEIVER (PROCESS HEAT)

Organic Fluid Receiver

The PWRR for the organic fluid receiver (power) thermal storage concepts are shown below. Below approximately 7 hours, the reference Syltherm/taconite, trickle charge, storage concept is the best choice. Below about 7 hours the Hitec salt (sensible) and direct contact (latent) systems become cost effective, owing primarily to high Syltherm 800 fluid cost and degradation.

For the organic fluid receiver process heat application nothing was identified with more promise than Caloria/granite or Caloria only (2 tank).

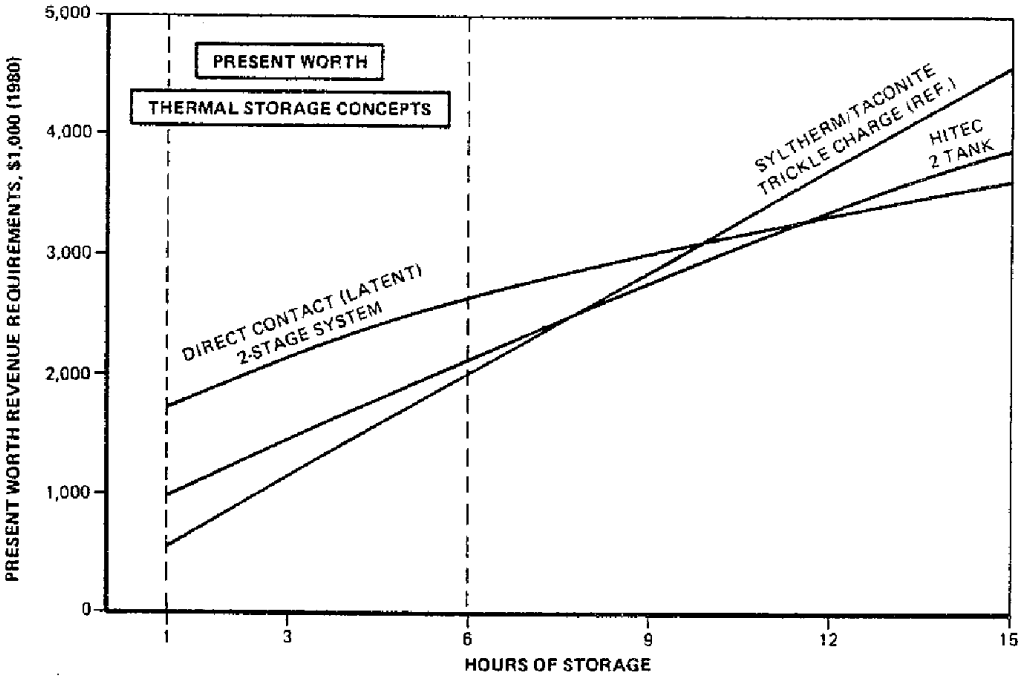

PRESENT WORTH REVENUE REQUIREMENTS, ORGANIC FLUID RECEIVER (POWER)

Closed Air Brayton Receiver (Power)

The PWRR for the thermal storage concepts for the closed air Brayton cycle operating at 816°C (1,500°F) is shown below. Nothing was identified with significantly more promise than the reference air/alumina brick sensible heat storage system. A tube intensive latent heat system (not shown) was investigated and reported however its performance would be relatively poor.

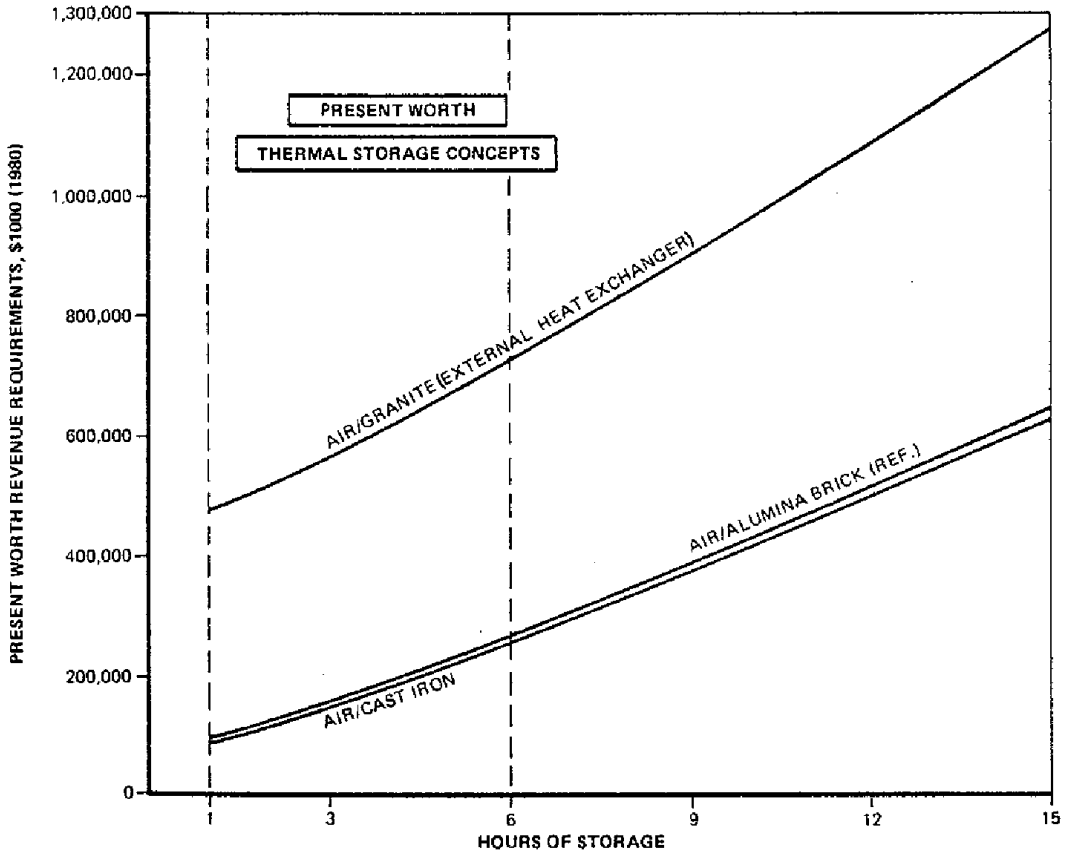

PRESENT WORTH REVENUE REQUIREMENTS,
CLOSED AIR BRAYTON RECEIVER (POWER)

TABLE OF CONTENTS

		Page
1.0	Introduction	1
1.1	Background	1
1.2	Objective	1
1.3	Scope	1
	1.3.1 Reference Systems	2
1.4	Requirements	2
	1.4.1 Thermal Storage Cost Base	2
	1.4.2 Allowable Changes in Reference System	8
	1.4.3 Non-Allowable Changes in Reference System	8
	1.4.4 Site	8
1.5	Approach	9
	1.5.1 Task 1 - Concept Screening	9
	1.5.2 Task 2 - Conceptual Designs	9
	1.5.3 Task 3 - Cost Analysis	10
	1.5.4 Task 4 - Final Report	10
	1.5.5 Task 5 - Management	10
1.6	Organization of Report	10
2.0	Concept Screening	11
2.1	Scope	11
2.2	Approach	11
	2.2.1 Screening Criteria	11
	2.2.2 Literature Review	11
2.3	Storage Concepts Screened - Initial List	12
	2.3.1 Water/Steam Receiver TES Concepts (Power)	12
	2.3.2 Water/Steam Receiver TES Concepts (Process Heat)	16
	2.3.3 Organic Fluid Receiver TES Concepts (Power)	16
	2.3.4 Alternate Organic Fluid Reciever TES Concepts (Power)	16
	2.3.5 Organic Fluid Receiver TES Concepts (Process Heat)	24
	2.3.6 Closed Air Brayton Receiver TES Concepts (Power)	24
2.4	Final Screening	30
	2.4.1 Water/Steam Receiver TES Concepts (Power)	30
	2.4.2 Water/Steam Receiver TES Concepts (Process Heat)	32
	2.4.3 Organic Fluid Receiver TES Concepts Power)	32
	2.4.4 Organic Fluid Receiver TES Concepts (Process Heat)	32
	2.4.5 Closed Air Brayton Receiver TES Concepts	32

TABLE OF CONTENTS (Continued)

		Page
3.0	Conceptual Designs	35
3.1	Scope	35
3.2	Reference Cycle Design Data	35
3.2.1	Reference Cycle Data	35
3.2.2	Water/Steam Receiver TES Design Criteria	35
3.2.3	Organic Fluid Receiver TES Design Criteria	35
3.2.4	Closed Air Brayton Receiver TES Design Criteria	35
3.3	Thermal Storage Media Properties	35
3.4	Water/Steam Receiver (Power)	35
3.4.1	Reference Solar Thermal System	35
3.4.2	Thermal Storage Concepts	44
3.4.3	Caloria/Granite - Draw Salt (2 Tank) (Reference System)	44
3.4.4	Caloria/Granite - Air/Granite	51
3.4.5	Caloria/Granite - Sand Moving Bed	55
3.4.6	Pressurized Water-Draw Salt (2 Tank)	64
3.4.7	Underground Oil/Rock, Solution-Mined-Draw Salt (2 Tank)	73
3.4.8	Caloria (2 Tank) -Draw Salt (2 Tank)	78
3.4.9	Tube Intensive Heat Exchanger-Draw Salt (2 Tank)	78
3.4.10	Containerized Salt-Draw Salt (2 Tank)	84
3.4.11	Direct Contact (Latent)-Phase Change Media (PCM)	95
3.5	Water/Steam Receiver (Process Heat)	111
3.5.1	Reference Solar Thermal System	111
3.5.2	Thermal Storage Concepts	111
3.5.3	Caloria/Granite Thermocline (Reference System)	111
3.5.4	Underground Pressurized Water Storage	118
3.5.5	Caloria/Granite Thermocline in Excavated Concrete Pit	118
3.5.6	Containerized Salt-Boiler Tank	124
3.6	Organic Fluid Receiver (Power)	134
3.6.1	Reference Solar Thermal System	134
3.6.2	Thermal Storage Concepts	134
3.6.3	Syltherm 800/Taconite Trickle Charge (Reference System)	134
3.6.4	Hitec Salt (2 Tank)	142
3.6.5	Direct Contact Phase Change 2-Stage System (Latent and Sensible)	149
3.7	Closed Air Brayton Receiver	159
3.7.1	Reference Solar Thermal System	159
3.7.2	Thermal Storage Concepts	159
3.7.3	Air/Alumina Brick (Reference System)	159
3.7.4	Air/Cast Iron	166
3.7.5	Air/Granite (External Heat Exchanger)	166

TABLE OF CONTENTS (Continued)

		Page
4.0	Cost Analysis	177
4.1	Scope	177
4.2	Methodology	177
4.2.1	Economic Factors	177
4.2.2	Construction Cost Factors	179
4.2.3	Operating and Maintenance Cost (O&M)	179
4.2.4	Economic Method	181
4.2.5	Cost Form	181
4.3	Unit Prices	181
4.4	Fluid Replacement	186
4.4.1	Operating Scenario	186
4.4.2	Yearly Fluid Loss Rates	189
4.5	Thermal Storage Concept Costs	189
4.5.1	Water/Steam Receiver TES Concepts - Power	191
4.5.2	Water/Steam Receiver TES Concepts - Process Heat	195
4.5.3	Organic Fluid Receiver TES Concepts Power	201
4.5.4	Closed Air Brayton Receiver TES Concepts	201
5.0	Supplemental Studies	209
5.1	Latent Heat Storage for Closed Brayton Cycle	209
5.1.1	System Description	209
5.1.2	Thermal Storage Design Data	213
5.1.3	Cost Analysis	213
5.1.4	Discussion	217
5.2	New 399°C (750°F) Oil for Organic Fluid Receiver System	217
5.2.1	Scope of Study	217
5.2.2	Approach	217
5.2.3	Results and Discussion	218
5.3	"600 F" Fluids Cost Sensitivity Analysis	222
5.3.1	Scope of Study	222
5.3.2	Approach	223
5.3.3	Results and Discussion	223
5.4	Modified Tube Intensive HX (Latent) Storage Concept	230
5.4.1	Water/Steam Receiver (Power)	230
5.4.2	Water/Steam Receiver (Process Heat)	235

TABLE OF CONTENTS (Concluded)

		Page
6.0	Conclusions and Recommendations	243
6.1	Conclusions	243
6.1.1	Water/Steam Receiver TES Concepts (Power)	243
6.1.2	Water/Steam Receiver TES Concepts (Power)	243
6.1.3	Organic Fluid Receiver TES Concepts	244
6.1.4	Closed Air Brayton Receiver TES Concepts	244
6.2	Recommendations	244
7.0	References	245
Appendix A.	Literature Review Summary Form	A-1
Appendix B.	Economic Evaluation Form	B-1
Appendix C.	Preliminary Regional Survey of Areas Where Underground Excavation for Hot Water Storage Might Prove Feasible	C-1
Appendix D.	Charging Heater Drain Pump Design Data	D-1

LIST OF FIGURES

		Page
1-1	Reference Water/Steam Power Cycle	3
1-2	Reference Organic Fluid Power Cycle	4
1-3	Reference Closed Air Brayton Cycle	5
1-4	Reference Water/Steam Process Heat Cycle	6
1-5	Reference Organic Fluid Process Heat Cycle	7
3-1	Reference Water/Steam Power Cycle	43
3-2	Thermal Storage System, Caloria/Granite - Draw Salt (2 Tank) (Reference System)	45
3-3	Temperature Profile, Caloria/Granite - Draw Salt (2 Tank) (Reference System)	47
3-4	Thermal Storage System, Caloria/Granite - Air Granite	52
3-5	Air/Rock HX/Fan Module (Typical), Water/Steam Receiver (Power)	53
3-6	Temperature Profile, Caloria/Granite-Air/Granite	54
3-7	Thermal Storage System, Caloria Granite-Sand Moving Bed	59
3-8	Temperature Profile, Caloria/Granite - Sand Moving Bed	60
3-9	Thermal Storage System, Underground Pressurized Water - Draw Salt (2 Tank)	65
3-10	Temperature Profile, Underground Pressurized Water-Draw Salt (2 Tank)	67
3-11	Thermal Storage System, Caloria/Rock, Solution-Mined Cavern-Draw Salt (2 Tank)	74
3-12	Thermal Storage System, Caloria (2 Tank)-Draw Salt (2 Tank)	79
3-13	Thermal Storage System, Latent, Tube Intensive-Draw Salt (2 Tank)	83
3-14	Temperature Profile, Tube Intensive HX-Draw Salt (2 Tank)	85

LIST OF FIGURES (Continued)

		Page
3-15	Thermal Storage System, Latent, Containerized Salt-Draw Salt (2 Tank)	92
3-16	Temperature Profile, Containerized Salt - Draw Salt (2 Tank)	94
3-17	Thermal Storage System, Latent, Direct Contact-PCM (2 Stage)	102
3-18	Temperature Profile, Direct Contact HX-PCM	104
3-19	Reference Water/Steam Process Heat Cycle	112
3-20	Thermal Storage System, Caloria/Granite (Reference System)	113
3-21	Temperature Profile, Caloria/Granite Thermocline (Reference System)	114
3-22	Thermal Storage System, Underground Pressurized Water	119
3-23	Thermal Storage System, Caloria/Granite, Concrete-Lined Pit	123
3-24	Thermal Storage System, Latent, Containerized Salt	128
3-25	Temperature Profile, Containerized Salt	130
3-26	Reference Organic Fluid Power Cycle	135
3-27	Thermal Storage System, Syltherm/Taconite (Trickle Charge) (Reference System)	136
3-28	Temperature Profile, Syltherm/Taconite (Reference System)	138
3-29	Thermal Storage System, HITEC (2 Tank)	143
3-30	Temperature Profile, HITEC (2 Tank)	145
3-31	Thermal Storage System, Latent, Direct Contact - PCM (2 Stage)	150
3-32	Temperature Profile, Latent, Direct Contact - PCM (2 Stage)	152

LIST OF FIGURES (Continued)

		Page
3-33	Reference Closed Air Brayton Cycle (Two 75 MWe Gross Modules)	160
3-34	Thermal Storage System, Air/Alumina Brick (Reference System)	161
3-35	Thermal Storage System, Air/Granite (External Heat Exchanger)	170
3-36	Air/Rock HX/Fan Module, Closed Air Brayton Cycle	171
3-37	Temperature Profile, Air/Granite (External Heat Exchanger)	172
4-1	Assumed Charging/Discharging Profiles For 1, 6 and 15 Hours Storage	188
4-2	Fluid Loss Rate vs. Thermal Storage Capacity	190
4-3	Unit Capital Investment, Water/Steam Receiver (Power)	196
4-4	Present Worth Revenue Requirements, Water/Steam Receiver (Power)	197
4-5	Unit Capital Investment, Water/Steam Receiver (Process Heat)	199
4-6	Present Worth Revenue Requirements, Water/Steam Receiver (Process Heat)	200
4-7	Unit Capital Investment, Organic (Syltherm 800) Fluid Receiver (Power)	203
4-8	Present Worth Revenue Requirements, Organic Fluid Receiver (Power)	204
4-9	Unit Capital Investment, Closed Air Brayton Receiver (Power)	206
4-10	Present Worth Revenue Requirements, Closed Air Brayton Receiver (Power)	207
5-1	Thermal Storage System Latent Heat Tube Intensive Heat Exchanger, Closed Helium Brayton Cycle	210

LIST OF FIGURES (Concluded)

		Page
5-2a	Estimated Transient Thermal Performance, Latent Heat Tube Intensive HX Thermal Storage System (Charging Cycle)	212
5-2b	Estimated Transient Thermal Performance, Latent Heat Tube Intensive HX Thermal Storage System (Discharging Cycle)	214
5-3	Flow Diagrams Using Syltherm 800 and MCS 1980 Receiver Fluids, Organic Fluid Receiver (Power)	221
5-4	Fluid Sensitivity Cost Curves, Water/Steam Receiver (Power), 1st Stage: Oil/Rock, 2nd Stage: Draw Salt (2 Tank)	224
5-5	Fluid Sensitivity Cost Curves, Water/Steam Receiver (Power), 1st Stage: Oil (2 Tank), 2nd Stage: Draw Salt (2 Tank)	225
5-6	Fluid Sensitivity Cost Curves Water/Steam Receiver (Process Heat) Oil/Rock	226
5-7	Thermal Storage System, Modified Tube Intensive HX (Latent) - Draw Salt (2 Tank)	231
5-8	Modified Tube Intensive HX Concept	232
5-9	Temperature Profile - Modified Tube Intensive HX	233
5-10	Thermal Storage System, Modified Tube Intensive HX (Latent) - Process Heat	238
5-11	Temperature Profile - Modified Tube Intensive HX (Latent) - Process Heat	239

LIST OF TABLES

		Page
2-1	Water/Steam Receiver (Power), Sensible Heat Storage Media Candidates, Initial Screening.....	13
2-2	Water/Steam Receiver (Power), Latent Heat Storage Media Candidates, Initial Screening.....	14
2-3	Latent Heat Storage, Heat Exchanger Concepts Being Developed.....	15
2-4	Water/Steam Receiver (Power), Sensible Heat Storage Media Candidates, Initial Screening.....	17
2-5	Water/Steam Receiver (Process), Sensible Heat Storage Media Candidates, Initial Screening.....	18
2-6	Water/Steam Receiver (Process), Latent Heat Storage Media Candidates, Initial Screening.....	19
2-7	Organic Fluid Receiver (Power), Sensible Heat Storage Media Candidates, Initial Screening.....	20
2-8	Organic Fluid Receiver (Power), Latent Heat Storage Media Candidates, Initial Screening.....	21
2-9	Alternate Organic Fluid Receiver (Power), Sensible Heat Storage Media Candidates, Initial Screening.	22
2-10	Alternate Organic Fluid Receiver (Power), Latent Heat Storage Media Candidates, Initial Screening.....	23
2-11	Organic Fluid Receiver (Process), Sensible Heat Storage Media Candidates, Initial Screening.....	25
2-12	Organic Fluid Receiver (Process), Latent Heat Storage Media Candidates, Initial Screening.....	26
2-13	Closed Air Brayton Receiver (Power), Sensible Heat Storage Media Candidates, Initial Screening.....	27
2-14	Closed Air Brayton Receiver (Power), Latent Heat Storage Media Candidates, Initial Screening.....	28
2-15	Thermal Storage Concepts, Water/Steam Receiver - Power.....	31
2-16	Thermal Storage Concepts, Water/Steam Receiver - Process Heat.....	31
2-17	Thermal Storage Concepts, Organic Fluid Receiver.....	33
2-18	Thermal Storage Concepts, Closed Air Brayton Receiver - Power.....	33

LIST OF TABLES (Continued)

		Page
3-1	Reference Cycle Data	36
3-2	Thermal Storage Concept Design Criteria, Receiver Type: Water/Steam	37
3-3	Thermal Storage Concept Design Criteria, Receiver Type: Organic	38
3-4	Thermal Storage Concept Design Criteria, Receiver Type: Closed Brayton	39
3-5	Solid Storage Media Properties	40
3-6	Fluid Storage Media Properties	41
3-7	Selected Phase Change Media Properties	42
3-8	Thermal Storage Design Data, Water/Steam Receiver Power, Caloria/Granite-Draw Salt (Reference System), 1-Hour	48
3-9	Thermal Storage Design Data, Water/Steam Receiver Power, Caloria/Granite-Draw Salt (Reference System), 6-Hours	49
3-10	Thermal Storage Design Data, Water/Steam Receiver Power, Caloria/Granite-Draw Salt (Reference System), 15-Hours	50
3-11	Thermal Storage Design Data, Water/Steam Receiver-Power, Caloria/Granite-Air/Granite, 1-Hour	56
3-12	Thermal Storage Design Data, Water/Steam Receiver-Power, Caloria/Granite-Air/Granite, 6-Hours	57
3-13	Thermal Storage Design Data, Water/Steam Receiver-Power, Caloria/Granite-Air/Granite, 15-Hours	58
3-14	Thermal Storage Design Data, Water/Steam Receiver-Power, Caloria/Granite-Sand Moving Bed, 1-Hour	61
3-15	Thermal Storage Design Data, Water/Steam Receiver-Power, Caloria/Granite-Sand Moving Bed, 6-Hours	62
3-16	Thermal Storage Design Data, Water/Steam Receiver-Power, Caloria/Granite-Sand Moving Bed, 15-Hours	63
3-17	Thermal Storage Design Data, Water/Steam Receiver-Draw Salt (2 Tank), 1-Hour	68

LIST OF TABLES (Continued)

		Page
3-18	Thermal Storage Design Data, Water/Steam Receiver-Power, Draw Salt (2 Tank), 6-Hours	69
3-19	Thermal Storage Design Data, Water/Steam Receiver-Power, Draw Salt (2 Tank), 15-Hours	70
3-20	Thermal Storage Design Data, Water/Steam Receiver-Power, Above Ground Pressurized Water-Draw Salt (2 Tank), 1-Hour	71
3-21	Thermal Storage Design Data, Water/Steam Receiver-Power, Above Ground Pressurized Water-Draw Salt (2 Tank), 6-Hours	72
3-22	Thermal Storage Design Data, Water/Steam Receiver-Power, Underground Solution-Mined Cavern-Draw Salt (2 Tank), 1-Hour	75
3-23	Thermal Storage Design Data, Water/Steam Receiver-Power, Underground Solution-Mined Cavern-Draw Salt (2 Tank), 6-Hours	76
3-24	Thermal Storage Design Data, Water/Steam Receiver-Power, Underground Solution-Mined Cavern-Draw Salt (2 Tank), 15-Hours	77
3-25	Thermal Storage Design Data, Water/Steam Receiver-Power, Caloria (2 Tank) - Draw Salt (2 Tank), 1-Hour	80
3-26	Thermal Storage Design Data, Water/Steam Receiver-Power, Caloria (2 Tank) - Draw Salt (2 Tank), 6-Hours	81
3-27	Thermal Storage Design Data, Water/Steam Receiver-Power, Caloria (2 Tank) - Draw Salt (2 Tank), 15-Hours	82
3-28	Thermal Storage Design Data, Water/Steam Receiver-Power, Tube Intensive HX-Draw Salt (2 Tank), 1-Hour	86
3-29	Thermal Storage Design Data, Water/Steam Receiver-Power, Tube Intensive HX-Draw Salt (2 Tank), 6-Hours	88

LIST OF TABLES (Continued)

		Page
3-30	Thermal Storage Design Data, Water/Steam Receiver-Power, Tube Intensive HX-Draw Salt (2 Tank), 15-Hours	90
3-31	Thermal Storage Design Data, Water/Steam Receiver-Power, Containerized Salt - Draw Salt (2 Tank), 1-Hour	96
3-32	Thermal Storage Design Data, Water/Steam Receiver-Power, Containerized Salt - Draw Salt (2 Tank), 6-Hours	98
3-33	Thermal Storage Design Data, Water/Steam Receiver-Power, Containerized Salt - Draw Salt (2 Tank), 15-Hours	100
3-34	Thermal Storage Design Data, Water/Steam Receiver-Power, Direct Contact HX-PCM, 1-Hour	105
3-35	Thermal Storage Design Data, Water/Steam Receiver-Power, Direct Contact HX-PCM, 6-Hours	107
3-36	Thermal Storage Design Data, Water/Steam Receiver-Power, Direct Contact HX-PCM, 15-Hours	109
3-37	Thermal Storage Design Data, Water/Steam Receiver-Process Heat, Caloria/Granite Thermocline (Reference System), 1-Hour	115
3-38	Thermal Storage Design Data, Water/Steam Receiver-Process Heat, Caloria/Granite Thermocline (Reference System), 6-Hours	116
3-39	Thermal Storage Design Data, Water/Steam Receiver-Process Heat, Caloria/Granite Thermocline (Reference System), 15-Hours	117
3-40	Thermal Storage Design Data, Water/Steam Receiver-Process Heat, Underground Pressurized Water, 1-Hour	120
3-41	Thermal Storage Design Data, Water/Steam Receiver-Process Heat, Underground Pressurized Water, 6-Hours	121
3-42	Thermal Storage Design Data, Water/Steam Receiver-Process Heat, Underground Pressurized Water, 15-Hours	122

LIST OF TABLES (Continued)

Page

3-43 Thermal Storage Design Data, Water/Steam Receiver-Process Heat, Caloria/Granite Thermocline-Concrete Pit, 1-Hour..... 125

3-44 Thermal Storage Design Data, Water/Steam Receiver-Process Heat, Caloria/Granite Thermocline-Concrete Pit, 6-Hours..... 126

3-45 Thermal Storage Design Data, Water/Steam Receiver-Process Heat, Caloria/Granite Thermocline-Concrete Pit, 15-Hours..... 127

3-46 Thermal Storage Design Data, Water/Steam Receiver-Process Heat, Containerized Salt (Latent, Boiler Tank), 1-Hour..... 131

3-47 Thermal Storage Design Data, Water/Steam Receiver-Process Heat, Containerized Salt (Latent, Boiler Tank), 6-Hours..... 132

3-48 Thermal Storage Design Data, Water/Steam Receiver-Process Heat, Containerized Salt (Latent, Boiler Tank), 15-Hours..... 133

3-49 Thermal Storage Data, Organic Fluid Receiver-Power, Syltherm/Taconite Trickle-Charge (Reference System), 1-Hour..... 139

3-50 Thermal Storage Data, Organic Fluid Receiver-Power, Syltherm/Taconite Trickle-Charge (Reference System), 6-Hours..... 140

3-51 Thermal Storage Data, Organic Fluid Receiver-Power, Syltherm/Taconite Trickle-Charge (Reference System), 15-Hours..... 141

3-52 Thermal Storage Design Data, Organic Fluid Receiver-Power, HITEC (2 Tank), 1-Hour..... 146

3-53 Thermal Storage Design Data, Organic Fluid Receiver-Power, HITEC (2 Tank), 6-Hours..... 147

3-54 Thermal Storage Design Data, Organic Fluid Receiver-Power, HITEC (2 Tank), 15-Hours..... 148

3-55 Thermal Storage Design Data, Organic Fluid Receiver-Power, Direct Contact Phase Change, 1-Hour..... 153

3-56 Thermal Storage Design Data, Organic Fluid Receiver-Power, Direct Contact Phase Change, 6-Hours..... 155

LIST OF TABLES (Continued)

		Page
3-57	Thermal Storage Design Data, Organic Fluid Receiver-Power, Direct Contact Phase Change, 15-Hours	157
3-58	Thermal Storage Design Data, Closed Air Brayton Receiver, Air/Alumina Brick (Reference System), 1-Hour	163
3-59	Thermal Storage Design Data, Closed Air Brayton Receiver, Air/Alumina Brick (Reference System), 6-Hours	164
3-60	Thermal Storage Design Data, Closed Air Brayton Receiver, Air/Alumina Brick (Reference System), 15-Hours	165
3-61	Thermal Storage Design Data, Closed Air Brayton Receiver, Air/Cast Iron, 1-Hour	167
3-62	Thermal Storage Design Data, Closed Air Brayton Receiver, Air/Cast Iron, 6-Hours	168
3-63	Thermal Storage Design Data, Closed Air Brayton Receiver, Air/Cast Iron, 15-Hours	169
3-64	Thermal Storage Design Data, Closed Air Brayton Receiver, Air/Granite (External Heat Exchanger), 1-Hour	174
3-65	Thermal Storage Design Data, Closed Air Brayton Receiver, Air/Granite (External Heat Exchanger), 6-Hours	175
3-66	Thermal Storage Design Data, Closed Air Brayton Receiver, Air/Granite (External Heat Exchanger), 15-Hours	176
4-1	Economic Factors	178
4-2	O&M Cost	180
4-3	Material Unit Prices (June 1980)	182
4-4	Chemical Unit Prices (June 1980)	183
4-5	Solid Storage Media Unit Prices (June 1980)	184
4-6	Fluid Storage Media Unit Prices (June 1980)	185

LIST OF TABLES (Continued)

		Page
4-7	Fluid Loss Rates	187
4-8	Thermal Storage Economic Evaluation, Water/Steam Receiver (Power), (1 Hour Storage)	192
4-9	Thermal Storage Economic Evaluation, Water/Steam Receiver (Power), (6 Hour Storage)	193
4-10	Thermal Storage Economic Evaluation, Water/Steam Receiver (Power), (15 Hour Storage)	194
4-11	Thermal Storage Economic Evaluation, Water/Steam Receiver (Process Heat)	198
4-12	Thermal Storage Economic Evaluation, Organic (Syltherm 800) Fluid Receiver	202
4-13	Thermal Storage Economic Evaluation, Closed Air Brayton Receiver (Power)	205
5-1	Thermal Storage Design Data, Closed Helium Brayton Receiver, Latent Heat, Tube Intensive	215
5-2	Thermal Storage Economic Evaluation, Closed Brayton Receiver, Sensible vs. Latent Energy Storage Systems	216
5-3	Syltherm 800 and MCS 1980 Fluid Characteristics	219
5-4	Cost Comparison Using Syltherm 800 and MCS 1980 Receiver Fluids, Organic Fluid Receiver (Power), HITEC (2 Tank) Thermal Storage System	220
5-5	Fluid Sensitivity Cost Summary, Water/Steam Receiver (Power), 1st Stage: Oil/Rock, 2nd Stage: Draw Salt	227
5-6	Fluid Sensitivity Cost Summary, Water/Steam Receiver (Power), 1st Stage: Oil (2 Tank), 2nd Stage: Draw Salt (2 Tank)	228
5-7	Fluid Sensitivity Cost Summary, Water/Steam Receiver (Process Heat), Oil/Rock	229
5-8	Thermal Storage Design Data, Water/Steam Receiver (Power), Modified Tube Intensive (Latent)- Draw Salt (2 Tank)	234
5-9	Thermal Storage Economic Evaluation, Water/Steam Receiver (Power)	236

LIST OF TABLES (Concluded)

Page

5-10 Thermal Storage Design Data, Water/Steam Receiver (Process Heat), Modified Tube Intensive (Latent)..... 240

5-11 Thermal Storage Economic Evaluation, Water/Steam (Process Heat), 6 Hour Storage..... 241

SECTION 1.0

INTRODUCTION

1.1 BACKGROUND

The commercial applications of solar thermal power systems will require thermal storage. Thermal storage will satisfy the needs to supply near continuous operation, to extend operation of the solar thermal system into non-daylight hours, and to buffer potentially harmful transients induced by rapid insolation changes. The Department of Energy (DOE) has recognized these needs and has prepared a draft plan to develop appropriate thermal storage technology. The Solar Energy Research Institute (SERI) is supporting the implementation of that plan with a systems analysis of storage coupled solar thermal systems. SERI's role includes identification of requirements and promising thermal storage concepts.

This report describes work performed by Stearns-Roger Services Inc. (S-R) and provides cost and performance data on thermal storage concepts in solar thermal applications under SERI Subcontract Number XP-0-9001-1. The period of performance for this subcontract was March 1, 1980 to March 31, 1981.

1.2 OBJECTIVE

The objectives of this study are as follows:

- To provide consistently calculated cost data for several thermal storage concepts in several solar thermal systems.
- To provide consistent and realistic performance data for thermal storage concepts integrated into solar thermal systems.
- To provide the above data as projected for a mature technology based upon the state-of-the-art and anticipated improvements in storage technologies.

1.3 SCOPE

The scope of this subcontract is limited to the evaluation of thermal storage concepts in the following solar thermal systems applications:

- Water/steam central receiver for an electric power plant (Diurnal storage for stand alone solar thermal plants).
- Organic fluid receiver for a dish receiver total energy application.
- Gas receiver for a closed cycle Brayton electric power plant.
- Process Heat
  - Water/steam receiver
  - Organic fluid receiver

1.3.1 Reference Systems

This study provides cost and performance data for alternative thermal storage concepts in each of the following reference solar thermal systems:

1) 100 MWe advanced water/steam central receiver [1]. Figure 1-1.

2) Organic fluid receiver for 400 kWe total energy system, Shenandoah Technology [2]. Figure 1-2.

3) 150 MWe closed cycle Brayton [3]. Figure 1-3.

4) For process heat the reference systems are 1) and 2) above less the power conversion and related equipment. Both process heat solar thermal systems shall deliver dry saturated steam in all operating modes. For the advanced water/steam technology, Figure 1-4, the steam shall be at 288°C (550°F); for the organic fluid receiver, Figure 1-5, the steam shall be at 172°C (341°F). Furthermore, both shall deliver only process heat.

1.4 REQUIREMENTS

1.4.1 Thermal Storage Cost Base

The cost and performance data was determined with the following conditions:

- The rates of charging thermal storage are the same as the reference system.
- The rates of discharging thermal storage are the same as the reference system.
- The capacity to store thermal energy is the same as the reference system. Note: because the efficiency may be different, the electrical storage ratings may be different.
- One hour of thermal energy storage is defined as the ability to store the thermal energy from the receiver which would have operated the plant for one hour at its name-plate rating (electrical for power generation) if the thermal energy had not been stored.

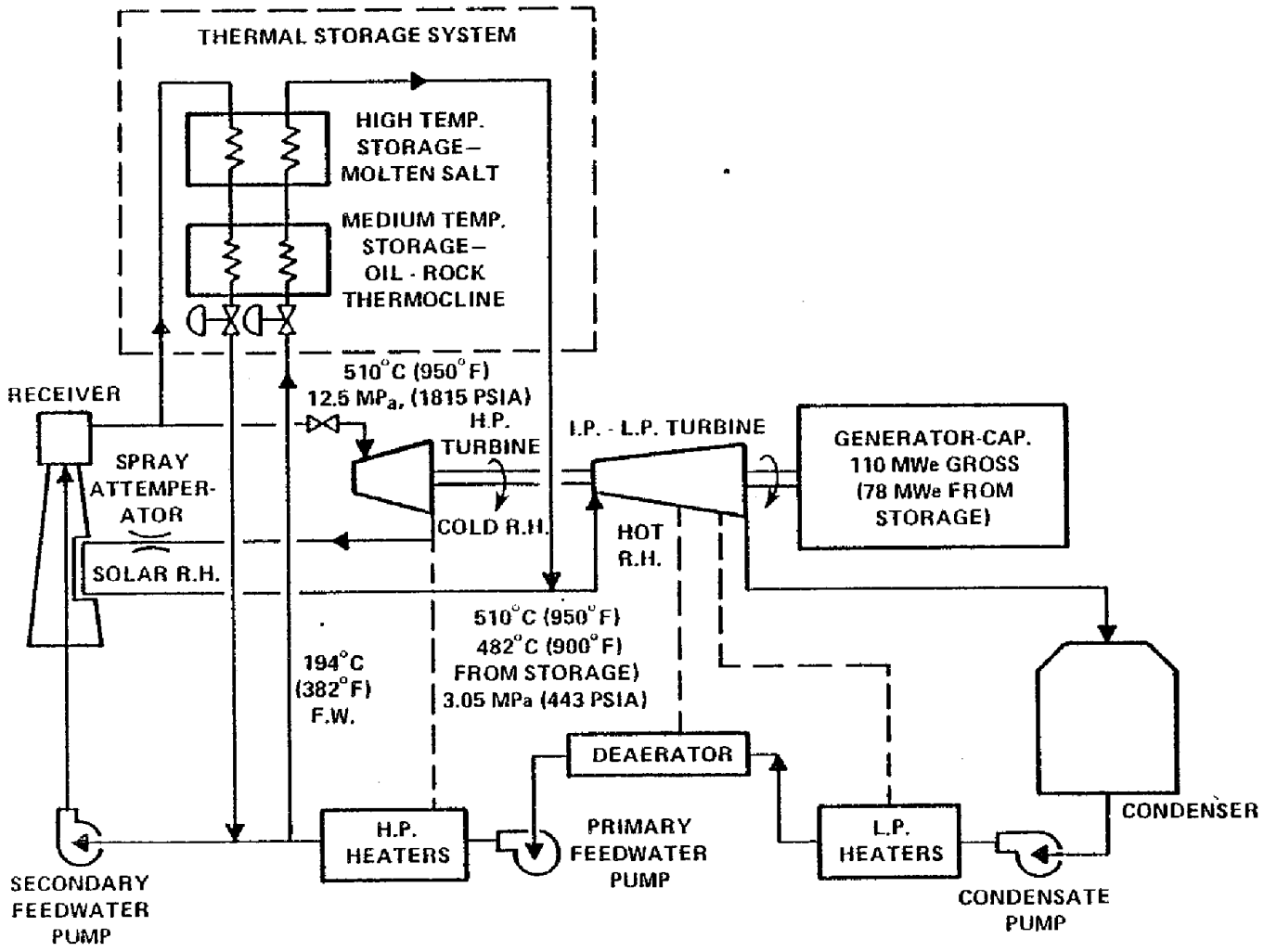

Figure 1–1. REFERENCE WATER/STEAM POWER CYCLE

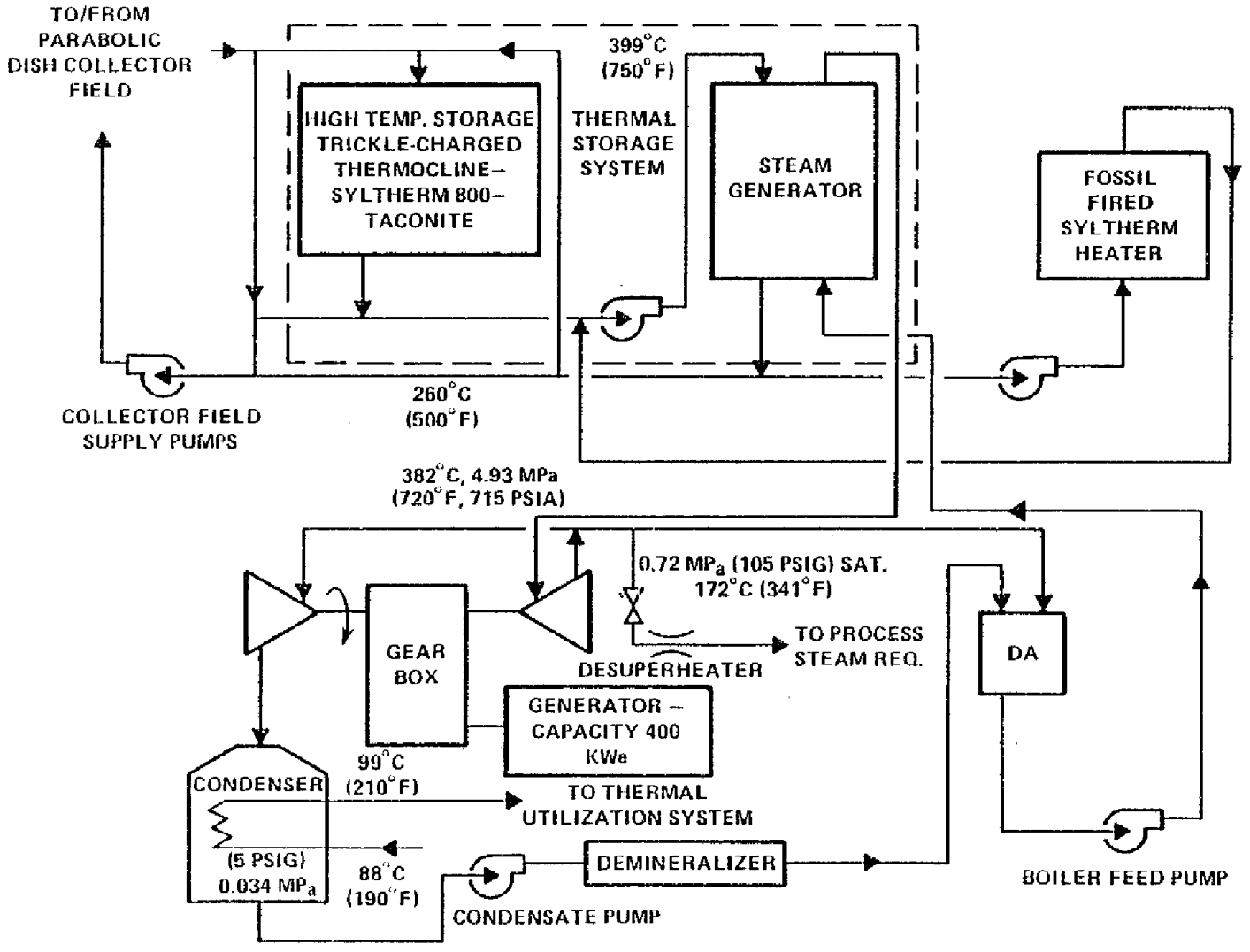

Figure 1–2. REFERENCE ORGANIC FLUID POWER CYCLE

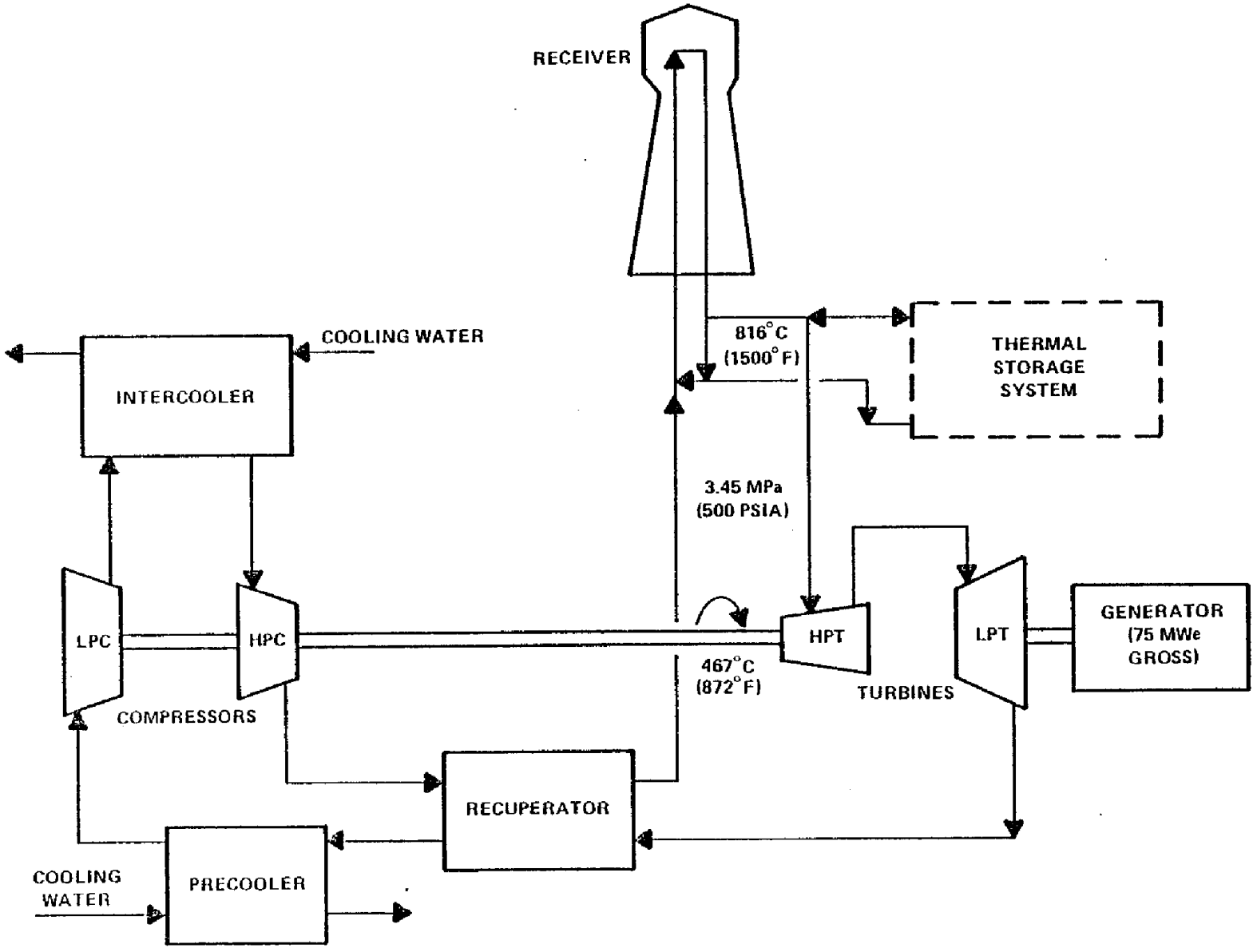

Figure 1–3. REFERENCE CLOSED AIR BRAYTON CYCLE (TWO-75 MWe GROSS MODULES)

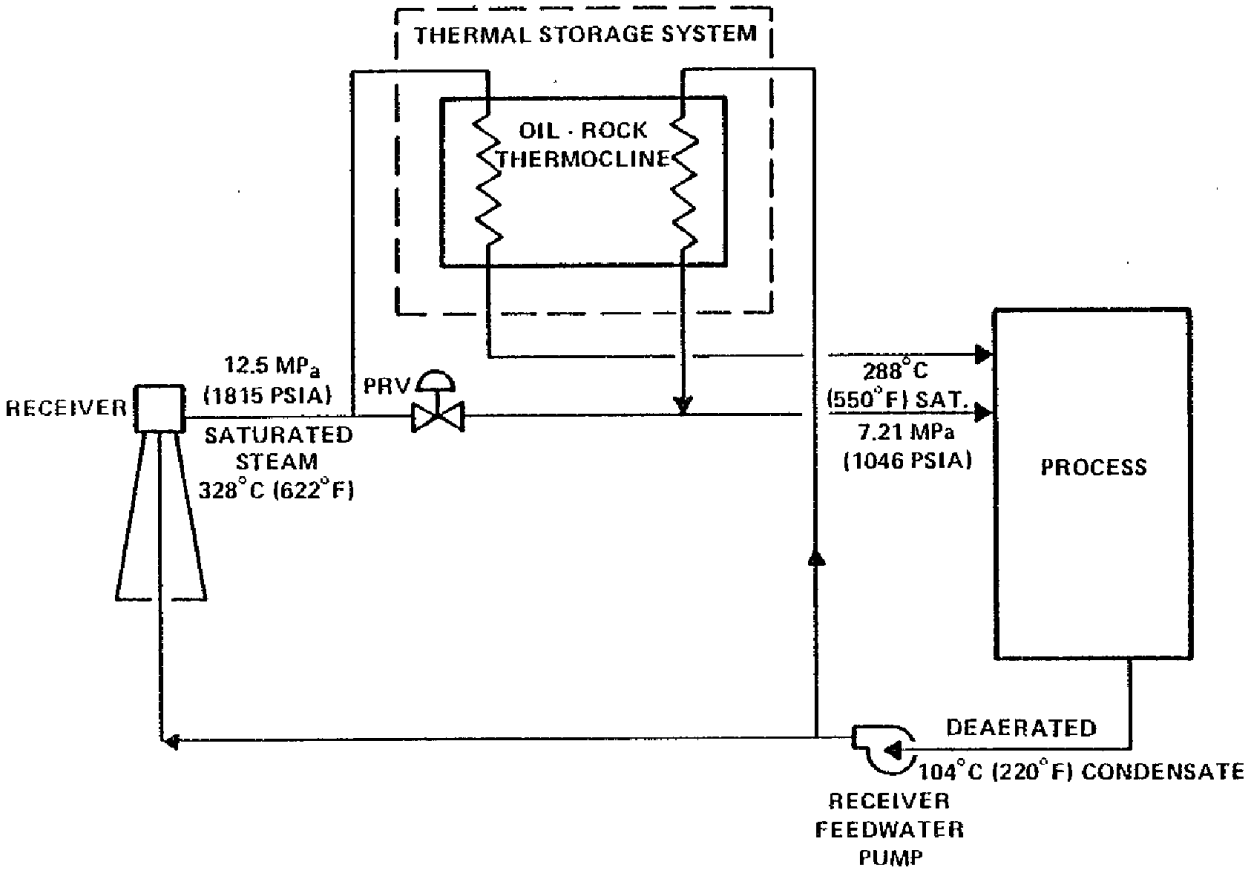

Figure 1–4. REFERENCE WATER/STEAM PROCESS HEAT CYCLE

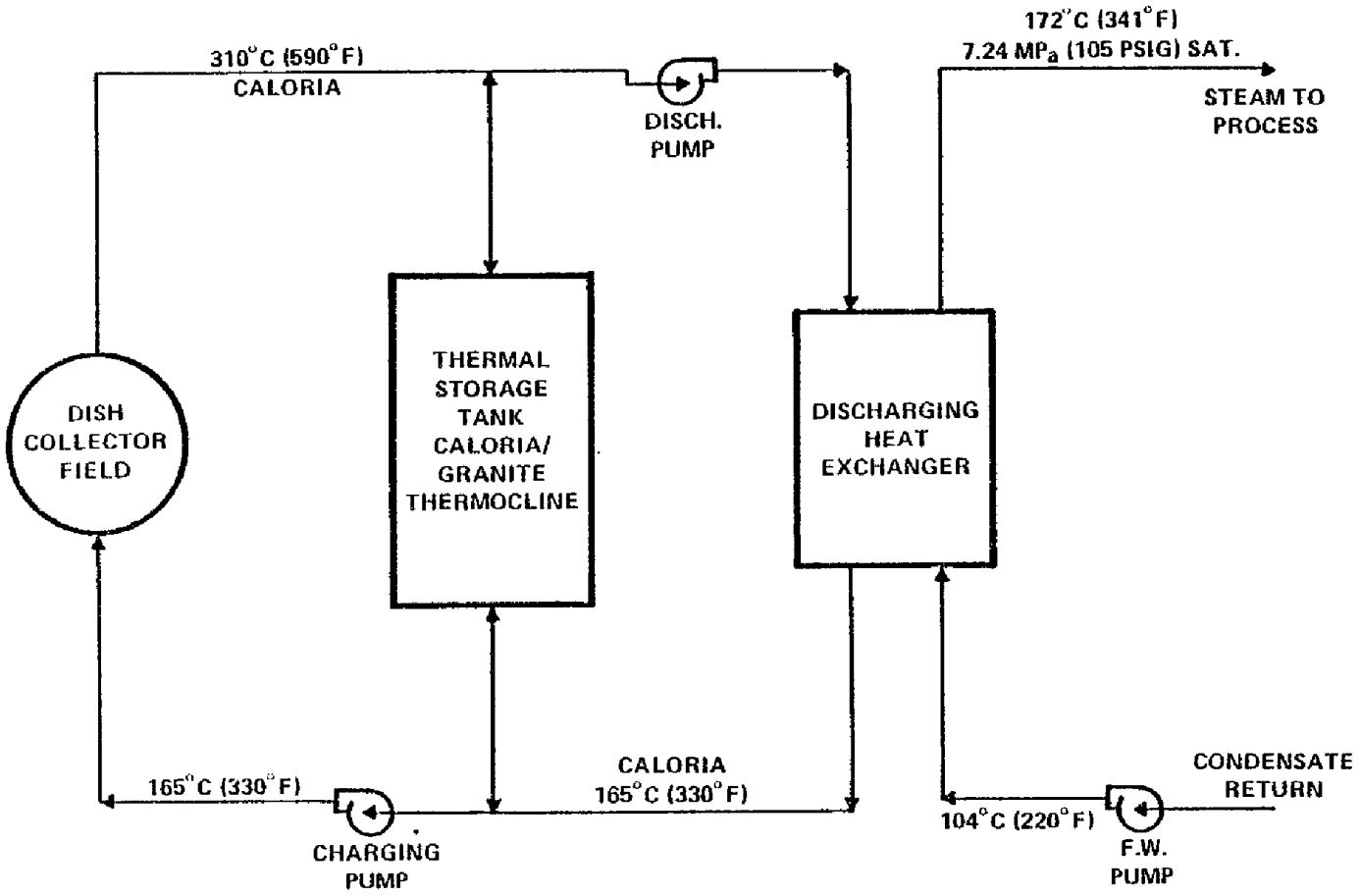

Figure 1–5. REFERENCE ORGANIC FLUID PROCESS HEAT CYCLE

- The name-plate rating in each case shall be the same as the reference system.
- The collector area shall be the same as the reference system.
- All items not affected by thermal storage shall be the same as the reference system.

1.4.2 Allowable Changes in Reference Systems

The integration of alternative storage systems will require changes to the reference systems. Any change which does not affect the primary non-storage equipment is allowable. The following is a partial list of allowable changes.

- Conversion cycle temperatures and pressures.
- Receiver temperature and pressure.
- Dual admission turbine changed to single admission or a change in design point admission conditions.
- Any item associated with the thermal storage subsystem.

1.4.3 Non-Allowable Changes in Reference Systems

Any change which modifies the receiver or power conversion cycle is not allowed. The following is a partial list of non-allowable changes.

- Change of power conversion cycle (e.g., from reheat steam cycle to a non-reheat cycle).
- Receiver transport fluid with the exception of organic fluid receiver where at least two organic transport fluids shall be investigated.
- Receiver design (e.g., from an external surface to a cavity).
- Plant name-plate rating including process heat delivery rate and quality.

1.4.4 Site

The assumed site for this study is Albuquerque, New Mexico. The assumed environmental design conditions are as follows:

- Design Wind (including gusts) 45 m/s (100 mph).
- Seismic UBC Zone 2.
- Soil Bearing 192 kPa (4000 psf).

Certain underground storage concepts investigated, namely solution - mined caverns for oil/rock storage which require natural salt deposits, and underground caverns for pressurized water storage which must be founded in solid rock formations, may not be specifically applicable to Albuquerque but represent viable storage concepts.

1.5 APPROACH

This study follows a work breakdown structure which includes five tasks; the scope of each task is described below:

1.5.1 Task 1 - Concept Screening

The Concept Screening task was divided into three subtasks, namely:

Task 1.1 Review and Accumulation of Available Data - The available storage system data shall be accumulated from the existing published literature and from contacts with SERI, national laboratories and contractors developing thermal storage.

Task 1.2 Preliminary Screening - The best available data on each identified thermal storage concept shall be used to generate a system schematic, concept description and preliminary cost. The data shall be reported for each thermal storage concept in each reference system for which the thermal storage concept has been proposed. A minimum of 40 thermal storage concepts will be identified.

Task 1.3 Screening Design Review - A screening design review shall be conducted and the data presented. A minimum of 20 thermal storage concepts will be recommended for additional study. Within two weeks following the review, SERI will provide a final list.

1.5.2 Task 2 - Conceptual Designs

Conceptual designs for each thermal storage concept shall be prepared. Initial performance estimates, revised cost data and design data lists shall be generated on each and reported at a Conceptual Design Review. Within two weeks following the conceptual design review SERI will identify recommended changes in the conceptual designs. Performance data shall be generated and reported for the final conceptual designs.

1.5.3 Task 3 - Cost Analysis

For each thermal storage concept selected following the conceptual design review, Stearns-Roger shall prepare detailed cost data. The cost data shall include both costs associated with the thermal storage subsystem and equipment changes in the reference system. The cost data shall include both power related costs and energy related costs for the range of 1.0 hours to 15.0 hours of thermal storage for each case. Stearns-Roger shall conduct a final briefing on the study results. Within one week following the briefing the SERI technical monitor will identify recommended changes. Stearns-Roger shall modify the cost and performance data to the extent deemed appropriate by Stearns-Roger.

1.5.4 Task 4 - Final Report

Stearns-Roger shall prepare a final report documenting all aspects of the study. The report shall document the final data on cost and performance and include system schematics, etc., for all thermal storage concepts studied in detail. Conceptual descriptions of all thermal storage concepts considered shall also be documented. A draft of the final report shall be prepared and submitted to SERI for review.

1.5.5 Task 5 - Management

Stearns-Roger shall provide the day-to-day management to control this study and deliver the required documentation including review presentation data, monthly status reports and final report.

1.6 ORGANIZATION OF REPORT

The organization of this report follows the three tasks (Tasks 1, 2 and 3) previously described (Sections 2.0 thru 4.0). Section 5.0 reports on several supplemental studies including latent heat storage for a closed Brayton cycle, new 399°C (750°F) oil for the organic fluid receiver, a "600°F" fluids cost sensitivity analysis, and a modified tube intensive latent heat storage utilizing a steam-to-salt heat exchanger. The conclusions and recommendations of this study are in Section 6.0. Section 7.0 contains the references cited in this report. Finally an Appendices is included in the back of the report.

SECTION 2.0

CONCEPT SCREENING

2.1 SCOPE

The Concept Screening task included the following steps:

- Literature Review - A review of available data on thermal storage concepts.
- Preliminary Screening - A listing of potential storage concepts applicable to each reference solar thermal system. Reduction in the total number of storage concepts to 40.
- Screening Design Review - A concept screening review wherein 20 thermal storage concepts are recommended for additional study in Task 3, Conceptual Design.

2.2 APPROACH

2.2.1 Screening Criteria

The following screening criteria were used during the initial thermal storage concept screening task.

- Safety - Can the system be operated safely in accordance with current industrial practices and standards?
- Technological Feasibility
  - Can the system be developed sufficiently to be practically applicable in the mid-1990's?

  -Has there been a module test?

  -Is the system simple enough to be brought on line and operated reliably?

  -Are special materials available in sufficient supply?
- Economics - Does the cost of a significant major component in one system far exceed the cost in another system without providing significant improvement?

2.2.2 Literature Review

The purpose of the literature review was to accumulate available storage system data from existing published literature, including contacts with SERI, national laboratories and contractors developing thermal storage. A form was developed (see Appendix A for typical example) to summarize

each reference with respect to thermal storage type, media used, operating temperature range, applicability to reference systems, availability of costing information and general summary and recommendations. A total of approximately 95 technical papers were reviewed during the concept screening phase.

2.3 STORAGE CONCEPTS SCREENED - INITIAL LIST

The following storage concepts and/or thermal storage media applicable to each of the reference solar thermal systems, i.e., water/steam receiver, organic fluid receiver and closed air Brayton receiver, were considered during the initial screening task. Both sensible heat and latent heat storage concepts were included. The initial screening judgments represent the "first cut" to reduce the number of concepts considered from approximately 120 to approximately 46.

2.3.1 Water/Steam Receiver TES Concepts (Power)

The thermal storage media condidates for the water/steam receiver (power) solar thermal system along with the rationale used for either continuing or discontinuing a concept is shown in Tables 2-1, 2-2 and 2-4, for first stage sensible heat, first stage latent heat and second stage sensible heat concepts, respectively. No latent heat second stage storage concepts were identified for the water/steam (power) application.

Table 2-1 identifies 18 first stage sensible heat storage media candidates applicable to the reference water/steam receiver power cycle. Of the initial 18 candidates, ten were selected for further study.

Table 2-2 shows the latent heat storage media candidates applicable to the reference first stage water/steam receiver power cycle. Only the hydroxide salts are suitable phase change media for this application. Both NaOH, Na_2CO_3 eutectic and NaOH, $NaNO_3$, MnO_2 ("Thermkeep") are suitable salts with approximately the same heat of fusion and cost.

Four latent heat storage heat exchanger concepts are currently under development as indicated in Table 2-3. The tube intensive design under development by Comstock and Wescott [4] utilizes passive, tube intensive heat exchangers in contact with the phase change media (NaOH, $NaNO_3$, MnO_2 - "Thermkeep"). Grumman Aerospace [5] is currently developing the direct contact heat exchanger which utilizes a secondary heat transport loop containing a liquid metal eutectic, lead-bismuth, which comes into direct contact with molten eutectic salt (NaCl, KCl, $MgCl_2$). A second Grumman test module concept, called the Rotating Drum Scrapper, has been fabricated. However, work has been delayed pending completion of the direct contact HX tests. The fourth latent heat storage heat exchanger concept being developed by the Naval Research Laboratory [6] utilizes containerized salt (Nacl, KCl, $MgCl_2$ eutectic) in a pressurized boiler tank. M-terphenyl is used as the heat transfer fluid.

Table 2-1. WATER/STEAM RECEIVER (POWER) SENSIBLE HEAT STORAGE MEDIA CANDIDATES INITIAL SCREENING

[Receiver Steam: 12.5 MPa (1815 psia); 510°C (950°F)]

1ST STAGE CANDIDATES	RATIONALE
1. Caloria/Granite (Reference)	• Continue Study - Reference System
2. Therminol-55/Taconite	Discontinue Study - Higher Cost Fluid, High Cost Solid Media
3. Therminol-66/Taconite	Discontinue Study - High Cost Fluid, High Cost Solid Media
4. Caloria (2 Tank)	• Continue Study - High Fluid Cost, Higher Tank Cost, but Lower Fluid Degradation
5. Draw Salt/Taconite	Discontinue Study - High Freeze Temp. Not Suitable for 1st Stage.
6. HITEC/Taconite	+ Continue Study - High Cost Alternate to Organic Fluid
7. HITEC (2 Tank)	Discontinue Study - High Fluid Cost
8. Caloria/Glass	Discontinue Study - Higher Solid Media Cost, Lower Storage Density than Rock.
9. HITEC/Glass	+ Continue Study - Lower Cost Solid Media
10. Pressurized Water	• Continue Study - Low Cost Media
11. Tube-In-Sand HX (JPL)	Discontinue Study - High HX Cost
12. Sand Moving Bed (B&W)	+ Continue Study - Low Cost Media
13. Fluidized Bed (Sand) (MRI)	Discontinue Study - Similar to Sand Moving Bed
14. Caloria/Slag	+ Continue Study - Low Cost Solid Media
15. Therminol-55/Slag	Discontinue Study - Similar to Caloria/Slag
16. Therminol-66/Slag	+ Continue Study - High Fluid Cost but Possible Lower Degradation
17. Air/Granite	+ Continue Study - Low Cost Media
18. Underground Oil/Rock, Solution - Mined	• Continue Study - Lower Cost Containment in Large Capacities

NOTE: •Designates Concept Carried Thru Final Screening
+Designates Concept Dropped in Final Screening

Table 2-2. WATER/STEAM RECEIVER (POWER) LATENT HEAT STORAGE MEDIA CANDIDATES INITIAL SCREENING

[Receiver Steam: 12.5 MPa (1815 psia); 510°C (950°F)]

1ST STAGE CANDIDATES	RATIONALE
1. Hydroxides	
a. $NaOH$, Na_2CO_3 [M.P.=287°C(550°F)]	• Continue Study - Recommended by Developer (NRI)
b. $NaOH$, $NaNO_3$, MnO_2 ("Thermkeep") [M.P.=292°C (558°F)]	• Continue Study - Recommended by Developer (C&W)
c. $NaOH$ [M.P.= 318°C (604°F)]	Discontinue Study - M.P. Too High, Higher Cost Media
d. KOH [M.P. = 360°C (680°F)]	Discontinue Study - M.P. Too High
2. Nitrates	
a. $NaNO_3$ [M.P.= 307°C (585°F)	Discontinue Study - $NaNO_3$, $NaOH$ Preferred
b. $NaNO_3$, $NaOH$ [M.P.= 310°C (590°F)]	Discontinue Study - M.P. Too High
3. Chlorides	
a. KCl, $NaCl$, $MgCl_2$ [M.P. 385°C (725°F)]	Discontinue Study - M.P. Too High
4. Carbonates	
a. $(Li\text{-}Na\text{-}K)_2CO_3$ [M.P. = 397°C(747°F)]	Discontinue Study - M.P. Too High

NOTE: •Designates Concept Carried Thru Final Screening

Table 2-3. LATENT HEAT STORAGE HEAT EXCHANGER CONCEPTS BEING DEVELOPED

CONCEPTS	DEVELOPER	STATUS
Tube Intensive	Comstock & Wescott	In Progress
Direct Contact	Grumman Aerospace	In Progress
Rotating Drum Scrapper	Grumman Aerospace	Delayed
Containerized Salt	Naval Research Lab.	In Progress

All of the latent heat storage heat exchanger concepts, except for the rotating drum scrapper, were retained through the final screening and are discussed in detail in Section 3.0.

Table 2-4 indicates the sensible heat storage media candidates for the second stage water/steam receiver power system. Of the ten concepts identified, five were selected for further study.

2.3.2 Water/Steam Receiver TES Concepts (Process Heat)

For the water/steam receiver process heat system the sensible heat storage media candidates are the same as those identified for the first stage power case with the exception that a concrete pit is used in lieu of the underground solution - mined cavern for the alternate oil/rock containment. Six sensible heat storage media candiates were considered for further study following the initial screening as shown in Table 2-5.

The latent heat storage media candidates for the water/steam receiver process heat system is shown in Table 2-6. A nitrate salt developed by Honeywell [7], $NaNO_3$, NaOH, has been selected for use in the latent heat storage concept.

2.3.3 Organic Fluid Receiver TES Concepts (Power)

The sensible heat storage media candidates for the organic fluid receiver used in the reference total energy system are shown in Table 2-7. The reference thermal energy storage concept is a Syltherm/taconite trickle charge thermocline. A total of nine TES candidates were considered with six retained for additional study.

Table 2-8 shows the latent TES concepts applicable to the organic fluid power system. In each case a two-stage system is required to reach the required 382°C (720°F) discharge steam temperature. For the salt mixtures considered, a latent heat first stage followed by a draw salt (2 tank) sensible heat second stage was used.

2.3.4 Alternate Organic Fluid Receiver TES Concepts (Power)

The alternate organic fluid receiver (power) TES media candidates are shown in Table 2-9. The organic fluid temperature from the receiver is 310°C (590°F). The reference TES concept is a single stage Caloria/granite thermocline. As alternates to the reference concept a Caloria (2 tank) system and two dual media storage concepts using glass and slag as the low cost media with Caloria were considered. All four concepts were continued thru the initial screening stage.

The latent heat TES media candidates for the alternate organic fluid power system are shown in Table 2-10. Only Na_2SO_4 used as both sensible and solid-to-solid phase change media was identified for continued study.

Table 2-4. WATER/STEAM RECEIVER (POWER)
SENSIBLE HEAT STORAGE MEDIA CANDIDATES
INITIAL SCREENING

[Receiver Steam: 12.5 MPa (1815 psia); 510°C (950°F)]

2ND STAGE CANDIDATES	RATIONALE
1. Draw Salt (2 Tank)	• Continue Study - Reference System
2. HITEC (2 Tank)	Discontinue Study - High Fluid Cost
3. Draw Salt/Taconite	+ Continue Study - Low Cost Solid Media
4. HITEC/Taconite	Discontinue Study - High Fluid Cost
5. Sodium (2 Tank)	Discontinue Study - High Fluid Cost, Lower Storage Density
6. Air/Granite	• Continue Study - Low Cost Media
7. Air/Refractory Brick	Discontinue Study - High Cost Media
8. Sand Moving Bed (B&W)	• Continue Study - Low Cost Media
9. Fluidized Bed (Sand)(MRI)	Discontinue Study - Similar to Sand Moving Bed
10. Phase Change Media (NaOH, $NaNO_3$, MnO_2	• Continue Study - Unique Application - Use with 1st Stage Direct Contact HX.

NOTE: •Designates Concept Carried Thru Final Screening
+Designates Concept Dropped in Final Screening

Table 2-5. WATER/STEAM RECEIVER (PROCESS) SENSIBLE HEAT STORAGE MEDIA CANDIDATES INITIAL SCREENING

[Receiver Steam: 12.5 MPa (1815 psia); 328°C (622°F) Sat.]
[Process Steam: 7.2 MPa (1045 psia), 288°C (550°F) Sat.]

CANDIDATES	RATIONALE
1. Caloria/Granite (Reference)	• Continue Study - Reference System
2. Therminol - 55/Taconite	Discontinue Study - High Solid Media Cost, Fluid Similar to Caloria
3. Therminol - 66/Taconite	Discontinue Study - High Fluid Cost
4. Caloria (2 Tank)	Discontinue Study - High Fluid Cost
5. Draw Salt/Taconite	Discontinue Study - Freezing Point too High
6. HITEC/Taconite	+ Continue Study - Alternate Fluid Media
7. HITEC (2 Tank)	Discontinue Study - High Fluid Cost
8. Caloria/Glass	Discontinue Study - Higher Solid Media Cost, Lower Storage Density
9. Pressurized Water	• Continue Study - Low Cost Media
10. Tube-In-Sand (JPL)	Discontinue Study - High Heat Exch. Cost
11. Sand Moving Bed (B&W)	+ Continue Study - Low Cost Media
12. Fluidized Bed (Sand) (MRI)	Discontinue Study - Similar to Sand Moving Bed
13. Caloria/Slag	+ Continue Study - Low Cost Solid Media
14. Therminol - 66/Slag	Discontinue Study - High Fluid Cost
15. Air/Granite	+ Continue Study - Low Cost Media
16. Caloria/Granite, Concrete Pit	• Continue Study - Lower Cost Containment

NOTE: •Designates Concept Carried Thru Final Screening
+Designates Concept Dropped in Final Screening

Table 2-6. WATER/STEAM RECEIVER (PROCESS)
LATENT HEAT STORAGE MEDIA CANDIDATES
INITIAL SCREENING

[Receiver Steam: 12.5 MPa (1815 psia); 328°C (622°F) Sat.]
[Process Steam: 7.2 MPa (1045 psia), 288°C (550°F) Sat.]

CANDIDATES	RATIONALE
1. Hydroxides	
a. $NaOH$, $NaNO_3$, MnO_2 ("Thermkeep") [M.P. = 292°C (558°F)]	Discontinue Study - M.P. Too Low
b. $NaOH$, Na_2CO_3 [M.P. = 287°C (550°F)]	Discontinue Study - M.P. Too Low
2. Nitrates	
a. $NaNO_3$ [M.P. = 307°C (585°F)]	Discontinue Study - Similar to $NaNO_3$, $NaOH$
b. $NaNO_3$, $NaOH$ [M.P. = 310°C (590°F)]	• Continue Study - Preferred Nitrate Phase Change Media

NOTE: •Designates Concept Carried Thru Final Screening

Table 2.7. ORGANIC FLUID RECEIVER (POWER)
SENSIBLE HEAT STORAGE MEDIA CANDIDATES
INITIAL SCREENING

[Receiver Fluid Temperature 399°C (750°F)]

CANDIDATES	RATIONALE
1. Syltherm/Taconite (Reference) (Trickle Charge)	• Continue Study - Reference System
2. Draw Salt (2 Tank)	Discontinue Study - Freezing Problem in Preheater HX
3. HITEC (2 Tank)	• Continue Study - Does Not Require Oil/Solid Media Contact
4. HITEC/Taconite	+ Continue Study - Low Cost Solid Media
5. HITEC/Glass	+ Continue Study - Low Cost Solid Media
6. Sand Moving Bed (B&W)	Discontinue Study - Application Too Small
7. Air/Granite	Discontinue Study - Costly HX, Large Fan Power
8. Syltherm/Glass	+ Continue Study - Low Cost Solid Media
9. Syltherm/Slag	+ Continue Study - Low Cost Solid Media

NOTE: •Designates Concept Carried Thru Final Screening
+Designates Concept Dropped in Final Screening

Table 2-8. ORGANIC FLUID RECEIVER (POWER)
LATENT HEAT STORAGE MEDIA CANDIDATES
INITIAL SCREENING

[Receiver Fluid Temperature 399°C (750°F)]

CANDIDATES	RATIONALE
1. Hydroxides	
a. KOH (M.P. = 360°C (680°F))	Discontinue Study - Expensive Media
b. NaOH + Molten Salt (2-Stage) [M.P. (NaOH) = 318°C (604°F)]	Discontinue Study · Similar to "Thermkeep"
c. NaOH, $NaNO_3$, MnO_2 ("Thermkeep") + Molten Salt (2-Stage) [M.P. (Thermkeep) = 292°C (558°F)]	+ Continue Study - Representative Hydroxide Phase Change Media
d. NaOH, Na_2CO_3 + Molten Salt (2 Stage) [M.P. (NaOH, Na_2CO_3) = 287°C (550°F)]	Discontinue Study - Similar to "Thermkeep"
2. Nitrates	
a. $NaNO_3$ + Molten Salt (2-Stage) [M.P. ($NaNO_3$) = 307°C (585°F)]	Discontinue Study - Similar to $NaNO_3$, NaOH
b. $NaNO_3$, NaOH + Molten Salt (2-Stage) [M.P. ($NaNO_3$, NaOH) = 310°C (590°F)]	• Continue Study - Preferred Nitrate Phase Change Media
3. Carbonates	
a. $(Li\text{-}Na\text{-}K)_2\ CO_3$ [M.P. = 397°C (747°F)]	Discontinue Study - M.P. Too High
4. Chlorides	
a. KCl, NaCl, MgCl [M.P. = 385°C (725°F)]	Discontinue Study - M.P. Too High

NOTE: •Designates Concept Carried Thru Final Screening
+Designates Concept Dropped in Final Screening

Table 2-9. ALTERNATE ORGANIC FLUID RECEIVER (POWER) SENSIBLE HEAT STORAGE MEDIA CANDIDATES INITIAL SCREENING

[Receiver Fluid Temperature 310°C (590°F)]

CANDIDATES	RATIONALE
1. Caloria/Granite (Reference)	• Continue Study - Reference System
2. Caloria (2 Tank)	• Continue Study · Alternate to Dual Media
3. Caloria/Glass	+ Continue Study - Alternate Low Cost Media
4. Caloria/Slag	+ Continue Study - Alternate Low Cost Media

NOTE: •Designates Concept Carried Thru Final Screening
+Designates Concept Dropped in Final Screening

Table 2-10. ALTERNATE ORGANIC FLUID RECEIVER (POWER) LATENT HEAT STORAGE MEDIA CANDIDATES INITIAL SCREENING

[Receiver Fluid Temperature 310°C (590°F)]

CANDIDATES	RATIONALE
1. Hydroxides	
a. $NaOH$, $NaNO_3$, MnO_2 ("Thermkeep") (M.P. = 292°C (558°F))	Discontinue Study - M.P. Too High
b. $NaOH$, Na_2CO_3 (M.P. = 287°C (550°F))	Discontinue Study - M.P. Too High
2. Nitrates	
a. $NaNO_3$ (M.P. = 307°C (585°F))	Discontinue Study - M.P. Too High
b. $NaNO_3$, $NaOH$ (M.P. - 310°C (590°F))	Discontinue Study - M.P. Too High
3. Sulfates	
a. Na_2SO_4 (Phase Change @ 240°C (465°F))	+ Continue Study - Solid-to-Solid Phase Change Media

NOTE: +Designates Concept Dropped in Final Screening

2.3.5 Organic Fluid Receiver TES Concepts (Process Heat)

For the organic fluid receiver process heat system 11 storage media candidates were considered and only four concepts were continued thru the initial screening as shown in Table 2-11.

Table 2-12 shows the latent heat storage media candidates considered, however, all were eleminated.

2.3.6 Closed Air Brayton Receiver TES Concepts (Power)

The reference closed air Brayton cycle utilizes a sensible heat air/alumina (Al_2O_3) brick TES system operating at a maximum temperature of 816°C (1500°F) at 3.4 MPa (500 psia). Internally insulated, carbon steel pressure vessels are used for containment. As indicated in Table 2-13, alternate solid media, e.g., MgO brick, cast iron (actually Meehanite), slag, glass and sand, were considered in place of alumina.

The air/granite TES utilizes external finned-tube heat exchangers and a low pressure air/rock bed with reversible air circulation fans. This storage concept was retained through the final screening.

The latent heat storage media candidates considered for the closed air Brayton cycle are shown in Table 2-14. Only the carbonate salt $(Li\text{-}Na\text{-}K)_2\ CO_3$ was carried through initial screening based on testing performed by the Institute of Gas Technology [8]; however, the latent heat storage concept for the Brayton cycle was discontinued for technical reasons.

Table 2-11. ORGANIC FLUID RECEIVER (PROCESS) SENSIBLE HEAT STORAGE MEDIA CANDIDATES INITIAL SCREENING

[Receiver Fluid Temperature 310°C (590°F)]
[Process Steam Temperature 172°C (341°F) Sat.]

CANDIDATES	RATIONALE
1. Caloria/Granite (Reference)	• Continue Study - Reference System
2. Molten Salts (Draw Salt & HITEC)	Discontinue Study - Salt Freezing Problems, High Fluid Cost
3. Caloria/Glass	+ Continue Study - Alternate Low Cost Solid Media
4. Tube-In-Sand (JPL)	Discontinue Study - High Cost Heat Exchanger
5. Sand Moving Bed (B&W)	Discontinue Study - High Heat Exch. Cost, Complex System
6. Fluidized Bed (Sand) (MRI)	Discontinue Study - Similar to Sand Moving Bed
7. Therminol-55/Taconite	Discontinue Study - High Media Cost
8. Therminol-55/Granite	Discontinue Study - Similar to Caloria/Granite
9. Caloria (2 Tank)	• Continue Study - Lower Fluid Degradation Than Dual Media
10. Pressurized Water	+ Continue Study - Low Cost Media
11. Air/Granite	Discontinue Study - High Heat Exch. Cost & Fan Power

NOTE: •Designates Concept Carried Thru Final Screening
+Designates Concept Dropped in Final Screening

Table 2-12. ORGANIC FLUID RECEIVER (PROCESS)
LATENT HEAT STORAGE MEDIA CANDIDATES
INITIAL SCREENING

[Receiver Fluid Temperature 310°C (590°F)]
[Process Steam Temperature 172°C (341°F) Sat.]

CANDIDATES	RATIONALE
1. Hydroxides	
a. $NaOH$, Na_2CO_3 (M.P. = 287°C (549°F))	Discontinue Study - M.P. Too High
b. $NaOH$, $NaNO_3$ MnO_2 ("Thermkeep") (M.P. = 292°C (558°F))	Discontinue Study - M.P. Too High
2. Nitrates	
a. $NaNO_3$, $NaOH$ (M.P. = 310°C (590°F))	Discontinue Study - M.P. Too High
b. $NaNO_3$ (M.P. = 307°C, (585°F))	Discontinue Study - M.P. Too High.

Table 2-13. CLOSED AIR BRAYTON RECEIVER (POWER) SENSIBLE HEAT STORAGE MEDIA CANDIDATES INITIAL SCREENING

[Receiver Air Temperature 816°C (1500°F)]

CANDIDATES	RATIONALE
1. Air/Alumina (Al_2O_3) Brick (Reference)	• Continue Study - Reference System
2. Air/Magnesite (MgO) Brick	+ Continue Study - Lower Cost Media
3. Air/Cast Iron	• Continue Study - Lower Cost Media
4. Air/Sand (SiO_2)	
a. Direct Contact	Discontinue Study - Large Volume, High Pressure Drop
b. Indirect (Tube-in-Sand)	Discontinue Study - High Heat Exch. Cost
c. Moving Bed (B&W)	Discontinue Study - Lack of Information at High Temperature
d. Fluidized Bed (MRI)	Discontinue Study - Lack of Information at High Temperature
5. Air/Granite (External Heat Exch.)	+ Continue Study - Low Cost Media, External Heat Exchanger
6. Air/Slag	Discontinue Study - Slag Softening and High Pressure Dorp
7. Air/Glass	Discontinue Study - Glass Softening and Low Storage Density

NOTE: •Designates Concept Carried Thru Final Screening
+Designates Concept Dropped in Final Screening

Table 2-14. CLOSED AIR BRAYTON RECEIVER (POWER) LATENT HEAT STORAGE MEDIA CANDIDATES INITIAL SCREENING

[Receiver Fluid Temperature 816°C (1500°F)]

CANDIDATES	RATIONALE
1. Carbonates	
a. Li_2CO_3 [M.P. = 723°C (1333°F)]	Discontinue Study - High Media Cost, Low Availability (Ref: IGT)
b. $(Li\text{-}Na\text{-}K)_2\ CO_3$ [M.P. = 706°C (1303°F)]	+ Continue Study - IGT Test Data, Good Conductivity, (Ref: IGT)
c. Li_2CO_3, $CaCO_3$ [M.P. = 662°C (1224°F)]	Discontinue Study - High Media Cost, Poor Conductivity, (Ref: IGT)
e. Na_2CO_3, $BaCO_3$ [M.P. = 686°C (1267°F)]	Discontinue Study - Lack of Data (Ref: IGT)
2. Chlorides	
a. $CaCl_2$ [M.P. = 772°C (1422°F)]	Discontinue Study - Highly Corrosive If Not Dry, (Ref: IGT)
b. KCl [M.P. = 776°C (1429°F)]	Discontinue Study - High Cost, Large Volume Change, Lower Ht. of Fusion (Ref: Grumman)
c. NaCl [M.P. = 801°C (1474°F)]	Discontinue Study - 25% Volume Change, Corrosive (Ref: IGT)
d. $CaCl_2$, NaCl Eutectic (M.P. = 500°C (932°F))	Discontinue Study - M.P. Too Low (Ref: NRL)
e. $NaCl_2$, Na_2CO_3 Eutectic (M.P. = 638°C (1180°F))	Discontinue Study - M.P. Too Low (Ref: NRL)
f. KCl, NaCl, $MgCl_2$ (M.P.= 385°C (725°F))	Discontinue Study - M.P. Too Low (Ref: NRL)

NOTE: +Designates Concept Dropped in Final Screening

Table 2-14. CLOSED AIR BRAYTON RECEIVER (POWER) (Continued)

LATENT HEAT STORAGE MEDIA CANDIDATES
INITIAL SCREENING

[Receiver Fluid Temperature 816°C (1500°F)]

CANDIDATES	RATIONALE
3. Florides	
a. KF, NaF (M.P. = 721°C (1330°F))	Discontinue Study - High Cost, Very Corrosive (Ref: IGT)
b. CaF_2m, KF, NaF Eutectic (M.P. = 682°C 1260°F))	Discontinue Study - Material Compatability Problems (Ref. Boeing)
4. Metal Alloys	
a. Metal Eutectics	Discontinue Study - High Cost Media, Lack of Data (Ref: Univ. of Deleware)

2.4 FINAL SCREENING

Following the intial screening of potential thermal storage concepts, a list of 20 final storage concepts was developed for the preparation of conceptual designs in Task 2.

The list of the final 20 thermal storage concepts was a result of Stearns-Roger's preliminary concept screening and a Concept Screening review. SERI had the responsibility of the providing a final list of the concepts to study in greater detail in the conceptual design task.

The following presents a final selection of thermal storage concepts by receiver type and the rationale used in the selection.

2.4.1 Water/Steam Receiver TES Concepts (Power)

The thermal storage concepts for the water/steam receiver (power) TES system is shown in Table 2-15.

Of the ten first stage storage concepts selected in the initial screening, six were discontinued during the final screening analyses. The storage concepts dropped include:

- HITEC/taconite - High media cost, potential salt freezing problems during startup and shutdown.
- HITEC/glass - Same as above.
- Sand Moving Bed (B&W) - High capital investment, high energy cost, technical uncertainties.
- Caloria/slag (Therminol/slag) - Lack of consistent physical data on slag, no previous experience.
- Air/granite - High power related costs, high energy cost.

An experiment of latent heat storage heat exchange methods was performed for the water/steam power first stage latent heat storage concepts. For this experiment the same phase change media, NaOH, $NaNO_3$, MnO_2 ("Thermkeep"), was used for the four heat exchange concepts, i.e., tube intensive, direct contact, rotating drum scrapper and containerized salt. A preliminary cost evaluation indicated that the tube intensive concept had the highest evaluated system cost, followed by the rotating drum scrapper HX, direct contact HX and containerized salt. Due to insufficient test data on the rotating drum scrapper HX this concept was discontinued in the final screening process. Work continued on the tube intensive HX, direct contact HX and containerized salt concepts through conceptual design and cost analysis.

Of the second stage storage concepts continued through the initial screening, all except the draw salt/taconite thermo cline were retained. The draw salt/taconite concept does not provide sufficient cost advantage over the reference draw salt (2 tank) system and has greater technical risk. The air/rock and sand moving bed storage concepts in this case, were retained along with the reference second stage concept as an experiment on second stage concepts.

Table 2-15. THERMAL STORAGE CONCEPTS
WATER/STEAM RECEIVER-POWER

	1st Stage	2nd Stage	Rationale
1.	Caloria/Granite	Draw Salt (2 Tank)	
2.	Caloria/Granite	Air/Rock	Experiment on
3.	Caloria/Granite	Sand, Moving Bed	2nd Stage Concepts
4.	Pressurized Water a. Underground b. Above Ground	Draw Salt (2 Tank)	
5.	Underground Oil/Rock,	Draw Salt (2 Tank)	Experiment on
6.	Caloria (2 Tank)	Draw Salt (2 Tank)	1st Stage Concepts
7.	Tube Intensive HX	Draw Salt (2 Tank)	
8.	Containerized Salt	Draw Salt (2 Tank)	
9.	Direct Contact HX Phase Change	The Phase Change Media	Experiment, Unique Capability

Table 2-16. THERMAL STORAGE CONCEPTS
WATER/STEAM RECEIVER-PROCESS HEAT

	Concept	Comments
1.	Caloria/Granite	Reference System
2.	Underground Pressurized Water	Low Cost Media
3.	Oil/Rock - Excavated Concrete Pit	Test of Alternate Containment of Oil/Rock System (Most Favorable Condition For Alternate Containment, (i.e. Largest Quantity of Oil and Rock and Thus Largest Tank)
4.	Containerized Salt	Representative of Phase Change Systems

2.4.2 Water/Steam Receiver TES Concepts (Process Heat)

Table 2-16 shows the selected thermal storage concepts for the water/steam receiver process heat application.

The rationale used in the selection of the final sensible heat storage concepts for continued study for the water/steam receiver process heat system follows that used for the first stage power generation case. As for latent heat concepts the containerized salt storage concept was selected as being representative of phase change systems in this specific application.

2.4.3 Organic Fluid Receiver TES Concepts (Power)

The selected thermal storage concepts for the reference total energy system is shown in Table 2-17.

Storage concepts that were dropped in the final screening included HITEC/taconite, HITEC/glass and Syltherm/slag. The HITEC/taconite and HITEC/glass concepts were dropped in favor of the HITEC (2 tank) concept. Syltherm/glass and Syltherm/slag were dropped due to lack of fluid compatibility data or user's experience.

Also as indicated in Table 2-17 for the low organic fluid temperature total energy system case, nothing was identified with more promise than Caloria/granite or Caloria (2 tank).

2.4.4 Organic Fluid Receiver TES Concepts (Process Heat)

As in the low organic fluid temperature power case, nothing was identified with more promise than Caloria/granite or Caloria (2 tank) for the organic fluid process heat system.

2.4.5 Closed Air Brayton Receiver TES Concepts

The storage concepts selected for the closed air Brayton cycle are shown in Table 2-18. The concepts include two sensible heat internal heat transfer experiments, air/alumina brick (reference concept) and air/cast iron (Meehanite). The alternate of air/MgO brick was considered to be similar to the reference concept subsequently dropped.

The air/granite storage concept was retained as a test of external heat exchange systems.

The test of a phase change storage concept for the closed air Brayton cycle could not be accomplished due to technical problems and the time required to identify a suitable phase change media. Consequently no conceptual design work was done on a latent heat storage concept for the closed air Brayton cycle. Further investigation of a latent heat concept for the closed Brayton cycle was included as a supplemental study and is reported in Section 5.1.

Table 2-17. THERMAL STORAGE CONCEPTS
ORGANIC FLUID RECEIVER

Concept	Rationale
Syltherm Receiver	Total Energy System
1. Syltherm 800/Taconite	Reference System
2. Molten Salt	Does Not Require Oil to Rock Contact
3. Direct Contact Phase Change as Two Stage System (Latent and Sensible)	Representative of Phase Change Systems (Sensible Heat Stored in Melted Phase Change Media)
Caloria Receiver	
None	Nothing Identified With More Promise Than Caloria/Granite or Caloria Only (2 Tank)
Process Heat Only	
None	Nothing Identified With More Promise Than Caloria/Granite or Caloria Only (2 Tank)

Table 2-18. THERMAL STORAGE CONCEPTS
CLOSED AIR BRAYTON RECEIVER-POWER

Concept	Rationale
1. Air/Al_2O_3 Brick (Internal Heat Transfer)	Reference System
2. Air/Cast Iron (Meehanite) (Internal Heat Transfer)	More Effective Media
3. Air/Granite (External Heat Exchanger)	Test of External Heat Exchange Storage Systems

SECTION 3.0

CONCEPTUAL DESIGNS

3.1 SCOPE

This section presents the conceptual design data prepared for each of the alternate thermal storage systems. Included are the reference system design criteria, thermal storage media properties used, performance data, flow diagrams, design data and discussion for each of the final thermal storage concepts considered.

3.2 REFERENCE CYCLE DESIGN DATA

3.2.1 Reference Cycle Data

The reference cycle data applicable to the three receiver types included in this study for both power generation and process heat are shown in Table 3-1.

3.2.2 Water/Steam Receiver TES Design Criteria

The thermal storage concept design criteria for the water/steam receiver power and process heat applications are shown in Table 3-2.

3.2.3 Organic Fluid Receiver TES Design Criteria

The thermal storage concept design criteria for the organic fluid receiver total energy system and process heat system are shown in Table 3-3.

3.2.4 Closed Air Brayton Receiver TES Design Criteria

The TES design criteria for the closed air Brayton receiver are shown in Table 3-4. The values shown are for two 75 MWe modules or 150 MWe total gross generation.

3.3 THERMAL STORAGE MEDIA PROPERTIES

The physical and thermal properties of the various thermal storage media used in the storage concept study are shown in the following tables. Table 3-5 shows the solid media properties and the void fraction used in the study. Fluid media properties are shown in Table 3-6. The properties of some selected phase change media are shown in Table 3-7.

3.4 WATER/STEAM RECEIVER (POWER)

3.4.1 Reference Solar Thermal System

The reference solar thermal system for the water/steam receiver power application is shown in Figure 3-1. The reference cycle is based on the Conceptual Design of a Solar Advanced Water/Steam Receiver by Babcock & Wilcox Company [1]. The steam cycle is for a nominal 100 MWe reheat

Table 3-1. REFERENCE CYCLE DATA

		RECEIVER TYPE				
		WATER/STEAM		ORGANIC FLUID		AIR BRAYTON
		POWER	PROCESS	TOTAL ENERGY	PROCESS	POWER
1. Generator Rating	kWe	110,000 (78,000 kWe from Storage)	N/A	400	N/A	2 - 75,000
2. Receiver Temp.	°C(°F)	510(950)	328(622) (Sat.Stm.)	399(750)	310(590)	816(1500)
3. Turbine Inlet Pres.	MPa (Psia)	12.5(1815)	N/A	379(750)	N/A	260(500)
4. Turbine Inlet Pres.	°C(°F)	510 (950)	N/A	382(720)	N/A	816(1500)
5. Turbine Reheat Temp.	°C(°F)	510(950)	N/A	N/A	N/A	N/A
6. Process Steam Temp.	°C(°F)	N/A	288(550) (Sat.)	172(341) (Sat.)	172(341) (Sat.)	N/A

Table 3-2. THERMAL STORAGE CONCEPT DESIGN CRITERIA
RECEIVER TYPE: WATER/STEAM

	UNITS	STORAGE TIME		
		1 HR.	6 HR.	15 HR.
Receiver Size	MW_t	306.5	519	739.2
Solar Multiple	-	1.16	1.96	2.80
EPGS (110 MWe)	MW_t	264	264	264
Charge Rate	MW_t	42.5	255	475.2
Discharge Rate	MW_t	224	224	224
Storage Capacity	$MW_t h$	224	1344	3360
Charge Time	h	6.27	5.27	7.07

Table 3-3. THERMAL STORAGE CONCEPT DESIGN CRITERIA
RECEIVER TYPE: ORGANIC

	UNITS	STORAGE TIME		
		1 HR.	6 HR.	15 HR.
Receiver Size	MW_t	2.54	4.69	6.75
Solar Multiple	-	1.20	2.22	3.20
EPGS (300 kWe)	MW_t	2.11	2.11	2.11
Charge Rate	MW_t	2.11	2.11	2.11
Discharge Rate	MW_t	2.11	12.66	31.65
Storage Capacity	$MW_t h$	224	1344	3360
Charge Time	h	4.91	4.91	6.82

Table 3-4. THERMAL STORAGE CONCEPT DESIGN CRITERIA
RECEIVER TYPE: CLOSED BRAYTON

	UNITS	STORAGE TIME		
		1 HR.	6 HR.	15 HR.
Receiver Size	MW_t	420	720	1008
Solar Multiple	-	1.17	2.00	2.80
EPGS (150 MWe)	MW_t	360	360	660
Charge Rate	MW_t	60	360	648
Discharge Rate	MW_t	360	360	360
Storage Capacity	$MW_t h$	360	2160	5400
Charge Time	h	6.0	6.0	8.3

Table 3-5. SOLID STORAGE MEDIA PROPERTIES

Material Temp. Swing °C (°F)	Solid Density kg/m^3 (lb/ft^3)	Average Specific Heat kJ/kg°C (BTU/lb°F)	Solid Storage Density kJ/m^3°C (BTU/ft^3°F)	Void Fraction Used
River Rock 400-816 (750-1500)	2643 (165)	1.088 (0.26)	2877 (42.9)	0.32
Crushed Granite 400-816 (750-1500)	2643 (165)	1.088 (0.26)	2877 (42.9)	0.32
Glass 232-510 (450-950)	2723 (170)	0.84 (0.20)	2280 (34.0)	0.32
Cast Iron (Gray) 400-816 (750-1500)	7192 (449)	0.67 (0.16)	4815 (71.8)	0.095
Sand (SiO_2) 232-816 (450-1500)	2595 (162)	1.00 (0.24)	2608 (38.9)	0.38
MgO Brick (95.5%) 400-816 (750-1500)	2867 (179)	1.21 (0.292)	3507 (52.3)	0.095
Al_2O_3 Brick (95.1%) 400-816 (750-1500)	3035 (189.5)	1.21 (0.286)	3635 (54.2)	0.095
Taconite 232-510 (450-950)	3620 (226)	0.92 (0.22)	3333 (49.7)	0.36
Meehanite (Type HR) 400-816 (750-1500)	7192 (449)	0.79 (0.19)	5721 (85.3)	0.095

Table 3-6. FLUID STORAGE MEDIA PROPERTIES

Fluid Temp. Swing °C (°F)	Bulk Density kg/m^3(lb/ft.^{3})	Avg. Specific Heat kJ/kg°C (BTU/lb°F)	Avg. Storage Density kJ/m^3°C (BTU/ft.^{3}°F)
Caloria HT 43[a] 232-316 (450-600)	689 (43.0)	2.76 (0.66)	1905 (28.4)
Therminol 55[b] 232-316 (450-600)	711 (44.4)	2.81 (0.67)	1992 (29.7)
Therminol 66[b] 232-316 (450-600)	827 (51.6)	2.47 (0.59)	2039 (30.4)
Syltherm 800[c] 260-400 (500-750)	660 (41.2)	2.09 (0.50)	1882 (20.6)
Demin. Water 121-343 (250-650)	827 (51.6)	4.69 (1.12)	3876 (57.8)
Sodium 260-510 (500-950)	961 (60.0)	1.26 (0.30)	1207 (18.0)
HITEC[d] 260-510 (500-950)	1778 (111.0)	1.55 (0.37)	2756 (41.1)
Draw Salt 260-510 (500-950)	1842 (115.0)	1.55 (0.37)	2857 (42.6)

[a] Caloria HT 43 is a product of Exxon Corporation.
[b] Therminol 55 and Therminol 66 are products of Monsanto Industrial Chemicals Co.
[c] Syltherm 800 is a product of Dow Corning.
[d] HITEC is a DuPont trademark.

Table 3-7. SELECTED PHASE CHANGE MEDIA PROPERTIES

CHEMICAL	MELTING POINT °C	°F	HEAT OF FUSION kJ/kg	BTU/lb
$NaOH, Na_2CO_3$ 81.5%, 18.5% Wt.	287	549	309	133
$NaOH, NaNO_3, MnO_2$ 91.8%, 8%, 0.2% Wt.	292	558	316	136
NaOH	318	604	316	136
$NaNO_3$	307	585	182	78
$NaNO_3$, NaOH 99%, 1% Wt.	310	590	182	78
$(Li-Na-K)_2\ CO_3$ 32%, 33%, 35%, Wt.	397	747	277	119
$(Li-Na-K)_2\ CO_3$ 1.21%, 49.95%, 48.84% Wt.	706	1,303	163	70
$Na_2\ CO_3$, $Ba\ CO_3$ 47.8%, 52.2% Wt.	686	1,267	172	74
$Mg\ Cl_2$, NaCl, KCL 55%, 24.5%, 20.5% Wt.	385	725	293	126
$CaCl_2$	772	1,422	256	110
KCl	776	1,429	315	135
NaCl	801	1,474	481	207
KF, NaF 67.5%, 32.5% Wt.	721	1,330	586	252
KOH	360	680	134	58
Li_2CO_3	723	1,333	607	261
Li_2CO_3, $CaCO_3$ 55.7%, 44.3% Wt.	662	1,224	274	118
$CaCl_2$, NaCl 68%, 32% Wt.	500	932	281	121

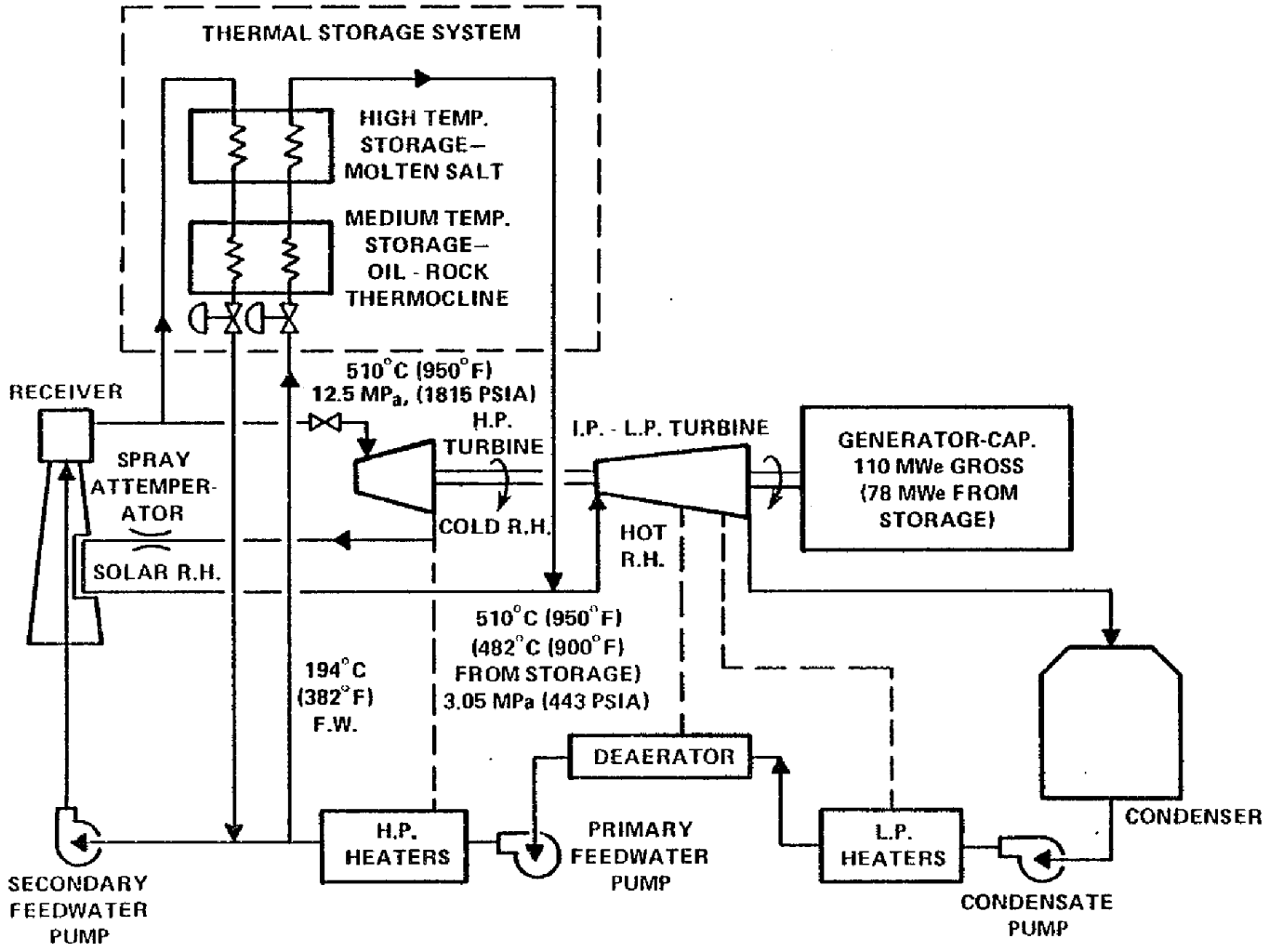

Figure 3–1. REFERENCE WATER/STEAM POWER CYCLE

turbine, with initial steam conditions of 12.5 MPa (1815 psia) and 510°C (950°F) with reheat to 510°C (950°F). Storage steam is admitted at the I.P./L.P. turbine inlet at 3.05 MPa (443 psia) and 482°C (900°F). When operating from storage the gross generation is 78 MWe.

3.4.2 Thermal Storage Concepts

The final thermal storage concepts considered for the water/steam receiver (power) conceptual designs include the following:

	1st Stage	2nd Stage
•	Caloria/Granite (Reference System)	Draw Salt (2 tank) (Reference System)
•	Caloria/Granite	Air/Granite
•	Caloria/Granite	Sand Moving Bed
•	Pressurized Water -Underground -Above ground	Draw Salt (2 tank)
•	Underground Oil/Rock, Solution-Mined	Draw Salt (2 tank)
•	Caloria (2 tank)	Draw Salt (2 tank)
•	Latent - Tube Intensive HX	Draw Salt (2 tank)
•	Latent - Containerized Salt	Draw Salt (2 tank)
•	Latent - Direct Contact HX	The Phase Change Media

3.4.3 Caloria/Granite - Draw Salt (2 Tank) - (Reference System)

3.4.3.1 System Description

A schematic showing the reference thermal storage system is shown in Figure 3-2. The first stage is a Caloria and rock thermocline operating between 246°C (475°F) and 316°C (600°F). During the charging mode, cold fluid is pumped from the thermal storage tank at 246°C (475°F) through the charging heat exchanger (condenser) where it is heated to 316°C (600°F) and then returned to the top of the tank. During the discharge mode fluid is pumped from the top of the tank at 316°C (600°F) through the discharge heat exchanger (boiler) and back to the bottom of the tank at 246°C (475°F).

Condensate formed in the first stage charging heat exchanger (condenser) is pumped back to the receiver by the charging heater drain pumps at 260°C (500°F).

A-8.80.022

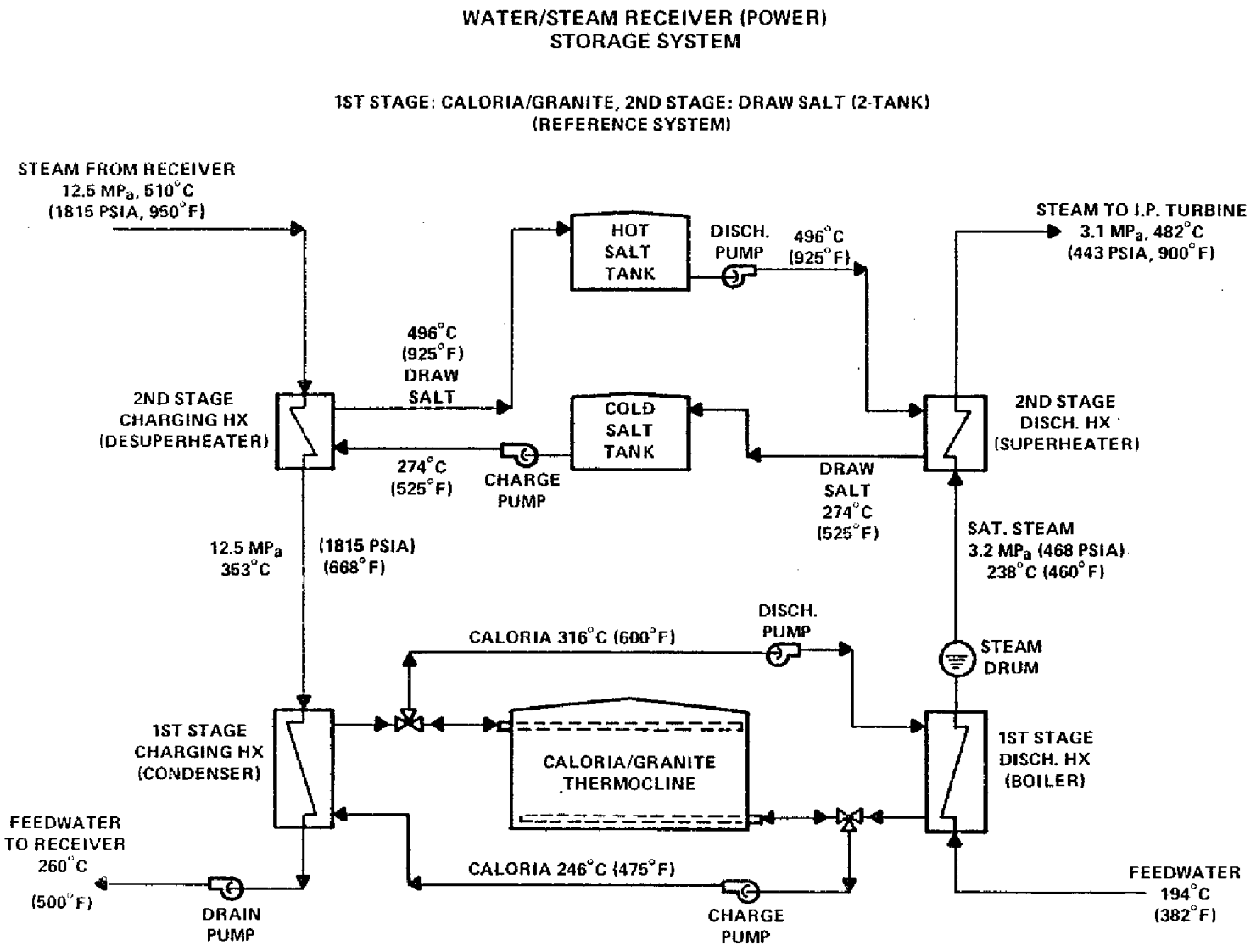

Figure 3–2. THERMAL STORAGE SYSTEM
CALORIA/GRANITE - DRAW SALT (2-TANK) (REFERENCE SYSTEM)

The reference second stage storage concept is of the two-tank type utilizing draw salt (60% $NaNo_3$, 40% KNO_3) heat transfer salts, operating between 274°C (575°F) and 496°C (925°F). During charging, draw salt at 274°C (525°F) is pumped from the cold tank through the 2nd stage charging heat exchanger (desuperheater) where it is heated to 496°C (925°F) before returning to the hot tank. During discharging the process is reversed, with the hot fluid pumped from the hot tank through the 2nd stage discharge heat exchanger (superheater) and returned to the cold tank. Storage discharge steam leaves the 2nd stage heat exchanger at 3.05 MPa (443 psia) and 482°C (900°F).

The temperature profile for the 2-stage reference storage system is shown in Figure 3-3.

3.4.3.2 Thermal Storage Design Data

The conceptual design data for the reference Caloria/granite - draw salt (2 tank) storage system for 1, 6 and 15 hours of storage is shown in Tables 3-8, 3-9, and 3-10, respectively.

3.4.3.3 Discussion

The Caloria/granite thermocline storage concept utilizes a low cost solid media (rock) and a relatively inexpensive fluid (Caloria) to provide an economical storage concept. However, some problem areas have been identified in dual-media systems namely: 1) fluid degradation, 2) thermocline instability, 3) heat exchanger fouling, and 4) increase in tank stresses due thermal cycling ("ratcheting").

Results of fluid loss rate tests by Sandia Laboratories [9] indicates that fluid losses can be very significant, particularly when operating at elevated temperatures while in contact with rock and sand mixtures or taconite. However, these tests were laboratory type static bench tests and different results most likely can be expected from operating systems, e.g., Barstow. Fluid loss rates used in the study are discussed in Section 4.4. A fluid cost sensitivity study for "600°F" organic fluids is presented in Section 5.3.

Thermocline stability in large dual-media storage systems still must be demonstrated. For the purpose of this study, we have assumed 10% of the bed height is unusable due to the combined effects of 2.4%/24 hours heat loss (fully charged), mounting of the low temperature manifold above the floor of the tank, and absence of a perfect thermocline.

Heat exchanger fouling can be a problem with organic fluids particularly when operating near the upper end of the fluids allowable operating temperature range. We have accounted for this by assuming a higher O&M cost for storage concepts utilizing intermediate heat exchangers and organic heat transfer fluids.

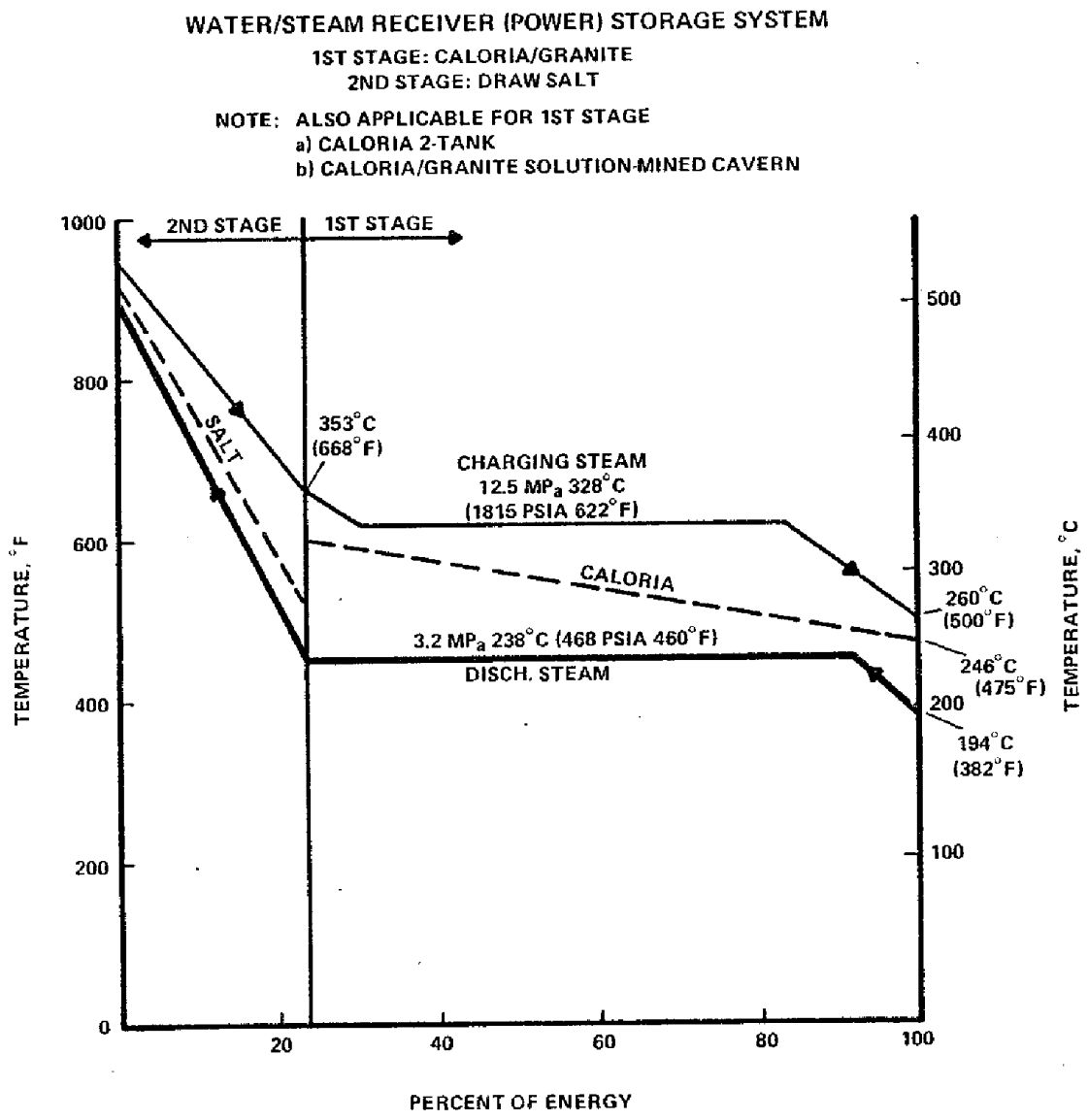

Figure 3–3. TEMPERATURE PROFILE - CALORIA/GRANITE - DRAW SALT (2-TANK) - (REFERENCE SYSTEM)

Table 3-8. THERMAL STORAGE DESIGN DATA
WATER/STEAM RECEIVER - POWER
CALORIA/GRANITE - DRAW SALT (REFERENCE SYSTEM)

HOURS OF STORAGE: One (1)

		1st STAGE		2nd STAGE	
		Caloria/Granite		Draw Salt (2 Tank)	
STORAGE MEDIA					
1. Operating Temperature					
a. Hot	°C (°F)	316 (600)		496 (925)	
b. Cold	°C (°F)	246 (475)		274 (525)	
2. Quantity (Total)					
a. Oil, Caloria	kg (ton)	1.0×10^6 (1,107)			
b. Granite	kg (ton)	7.3×10^6 (8,040)			
c. Draw Salt	kg (ton)			0.56×10^6 (621)	
ENERGY RELATED EQUIPMENT					
1. Storage Capacity	MW_{th}	171		52	
2. Storage Tanks			Hot Tank	Cold Tank	
a. Quantity		Two (2)	One (1)	One (1)	
b. Size, each (Dia.xHt.)	m(ft)	16.8 (55) x 10.7 (35)	9.1 (30)x5.5(18)	9.1 (30)x5.5(18)	
c. Material		Carbon Steel	304 SS	Carbon Steel	
d. Weight, each	kg (ton)	92,895 (103.5)	22,587 (26)	22,587 (26)	
3. Tank Insulation					
a. Type		Mineral Fiber w/Al. Lag.	Mineral Fiber w/Al. Lag.		
b. Thickness	m (ft)	0.15 (0.5)	0.253 (0.833)	0.13 (0.417)	
4. Tank Foundation					
a. Type		Concrete Mat	Concrete Mat	Concrete Mat	
b. Thickness	m (ft)	0.61(2) Insul. +1.52(5) Struct.	1.22(4)Insul. +1.22(4)Struct.	0.61(2)Insul. +1.22(4)Struct.	
c. Quantity, Total	$m^3(yd^3)$	942 (1,232)	161 (210)	122 (160)	

		Charging	Discharging	Charging	Discharging
POWER RELATED EQUIPMENT					
1. Steam					
a. Flow, Total	kg/s (lb/hr)	19(151,000)	86.65(687,700)	19(151,000)	86.65(687,700)
b. Pressure	MPa (psia)	12.5 (1,815)	3.2 (468)	12.5 (1,815)	3.1 (443)
c. Temperature	°C (°F)	353 (668)	238 (460)	510 (950)	482 (900)
2. Storage Fluid		Caloria	Caloria	Draw Salt	Draw Salt
a. Flow, Total	kg/s (lb/hr)	166 (1.27×10^6)	878 (6.97×10^6)	29 (0.23×10^6)	155 (1.23×10^6)
b. Pressure (Tank)	MPa (psia)	Atmospheric	Atmospheric	Atmospheric	Atmospheric
c. Temperature (Pump)	°C (°F)	246 (475)	316 (600)	274 (525)	496 (925)
3. Pumps					
a. Quantity		2-50%	2-50%	2-50%	2-50%
b. Type		Horiz. Centrif.	Horiz. Centrif.	Vert. Cantilever	Vert. Cantilever
c. Material		Carbon Steel	Carbon Steel	Carbon Steel	316 SS
d. Fluid		Caloria	Caloria	Draw Salt	Draw Salt
e. Capacity, each	m^3/s (gpm)	0.12 (1890)	0.67 (10,710)	0.008 (122)	0.045 (710)
f. Head	m (ft)	30.5 (100)	41.1 (135)	41.1 (135)	46.3 (152)
g. Power (Shaft), each	kWe (hp)	34 (45)	236 (316)	7.8 (10.5)	47 (63)
h. Motor size	kWe (hp)	37 (50)	261 (350)	14.9 (20)	56 (75)
4. Heat Exchangers					
a. Quantity		1-100%	2-50%	1-50%	2-50%
b. Type		Shell & Tube	Drum Type	Shell & Tube	Shell & Tube
c. Material		Carbon Steel	Carbon Steel	304 SS	304 SS
d. Surface Area, Total	$m^2(ft^2)$	867 (9,333)	6,224 (67,000)	303 (3,263)	2,614 (28,140)
e. Duty, Total	MW_t	32.5	171	10	53
ANNUAL ENERGY					
1. Electrical Energy	10^6kWeh	0.4275[a]	0.191	0.0335	0.0380
2. Electrical Energy(Per Stg)	10^6kWeh	0.6285[a]		0.0715	
3. Heat Loss (Per Stg)	10^9J(10^9BTU)	4,245 (4.024)		1,705 (1.616)	

Notes:
[a]Annual Electrical Energy (Charging) Includes Charging Heater Drain Pump Power (1st Stage). See Appendix D for Charging Heater Drain Pump Design Data.

Table 3-9. THERMAL STORAGE DESIGN DATA
WATER/STEAM RECEIVER - POWER
CALORIA/GRANITE - DRAW SALT (REFERENCE SYSTEM)

HOURS OF STORAGE: Six (6)

		1st STAGE		2nd STAGE	
		Caloria/Granite		Draw Salt (2 Tank)	
STORAGE MEDIA					
1. Operating Temperature					
a. Hot	°C (°F)	316 (600)		496 (925)	
b. Cold	°C (°F)	246 (475)		274 (525)	
2. Quantity, Total					
a. Oil, Caloria	kg (ton)	6.0×10^6 (6,614)			
b. Granite	kg (ton)	43.7×10^6 (48,198)			
c. Draw Salt	kg (ton)			3.4×10^6 (2,726)	
ENERGY RELATED EQUIPMENT					
1. Storage Capacity	MW_th	1,026		218	
2. Storage Tanks				Hot Tank	Cold Tank
a. Quantity		Two (2)		One (1)	One (1)
b. Size, each (Dia. x Ht.)	m(ft)	40.5(133)x10.7(35)		16.8(55)x9.1(30)	16.8(55)x9.1(30)
c. Material		Carbon Steel		304 SS	Carbon Steel
d. Weight, each	kg (ton)	638,215 (703.5)		89,359 (98.5)	90,720 (100)
3. Tank Insulation					
a. Type		Mineral Fiber w/Al. Lag.		Mineral Fiber w/Al. Lag.	
b. Thickness	m (ft)	0.13 (0.417)		0.25 (0.83)	0.13 (0.417)
4. Tank Foundation					
a. Type		Concrete Mat		Concrete Mat	Concrete Mat
b. Thickness	m (ft)	0.61(2) Insul.+1.52(5)Struct.		1.22(4)Insul. +1.52(5)Struc.	0.61(2)Insul. +1.52(5)Struc.
c. Quantity,Total	$m^3(yd^3)$	5,508 (7,204)		608 (795)	474 (620)
		Charging	Discharging	Charging	Discharging
POWER RELATED EQUIPMENT					
1. Steam					
a. Flow, Total	kg/s (lb/hr)	114 (905,500)	86.65(687,700)	114 (905,500)	86.65 (687,700)
b. Pressure	MPa (psia)	12.5 (1,815)	3.2 (468)	12.5 (1,815)	3.1 (442)
c. Temperature	°C (°F)	353 (668)	238 (460)	510 (950)	482 (900)
2. Storage Fluid		Caloria	Caloria	Draw Salt	Draw Salt
a. Flow, Total	kg/s (lb/hr)	$1000(7.94 \times 10^6)$	$878(6.97 \times 10^6)$	$174 (1.38 \times 10^6)$	$155 (1.22 \times 10^6)$
b. Pressure (Tank)	MPa (psia)	Atmospheric	Atmospheric	Atmospheric	Atmospheric
c. Temperature (Pump)	°C (°F)	246 (475)	316 (600)	274 (525)	496 (925)
3. Pumps					
a. Quantity		2 - 50%	2 - 50%	2 - 50%	2 - 50%
b. Type		Horiz. Centrif	Horiz. Centrif	Vert. Cantilever	Vert. Cantilever
c. Material		Carbon Steel	Carbon Steel	Carbon Steel	316 S.S.
d. Fluid		Caloria	Caloria	Draw Salt	Draw Salt
e. Capacity, each	m^3/s (gpm)	0.72 (11,340)	0.67 (10,710)	0.046 (730)	0.045 (710)
f. Head	m (ft)	41.1 (135)	41.1 (125)	46.3 (152)	46.3 (152)
g. Power, each	kWe (hp)	269 (361)	236 (316)	53 (71)	47 (63)
h. Motor size	kWe (hp)	298 (400)	261 (350)	75 (100)	56 (75)
4. Heat Exchangers					
a. Quantity		2 - 50%	2 - 50%	2 - 50%	2 - 50%
b. Type		Shell & Tube	Drum Type	Shell & Tube	Shell & Tube
c. Material		Carbon Steel	Carbon Steel	304 S.S.	304 S.S.
d. Surface Area, Total	$m^2(ft^2)$	5,202 (56,000)	6,224 (67,000)	1,819 (19,580)	2,614 (28,140)
e. Duty, Total	MW_t	195	171	60	53
ANNUAL ENERGY					
1. Electrical Energy	10^6kWeh	3.08[a]	1.148	0.225	0.228
2. Electrical Energy (Per/Stg)	10^6kWeh	4.228[a]		0.453	
3. Heat Loss (Per Stg)	10^9J(BTU)	18,462 (17.5)		5,191 (4.92)	

Notes:
[a]Annual Electrical Energy (Charging) Includes Charging Heater Drain Pump Power (1st Stage). See Appendix D for Charging Heater Drain Pump Design Data.

Table 3-10. THERMAL STORAGE DESIGN DATA
WATER/STEAM RECEIVER - POWER
CALORIA/GRANITE - DRAW SALT (REFERENCE SYSTEM)

HOURS OF STORAGE: Fifteen (15)

		1st STAGE	2nd STAGE	
		Caloria/Granite	Draw Salt (2 Tank)	
STORAGE MEDIA				
1. Operating Temperature				
a. Hot	°C (°F)	316 (600)	496 (925)	
b. Cold	°C (°F)	246 (475)	274 (525)	
2. Quantity, Total				
a. Oil, Caloria	kg (ton)	15×10^6 (16,583)		
b. Granite	kg (ton)	1.09×10^8 (120,600)		
c. Draw Salt	kg (ton)		8.5×10^6 (9,324)	
ENERGY RELATED EQUIPMENT				
1. Storage Capacity	$MW_t h$	2565	795	
2. Storage Tanks			Hot Tank	Cold Tank
a. Quantity		Six (6)	Two (2)	Two (2)
b. Size, each (Dia.xHt.)	m(ft)	37.2 (122)x10.7(35)	18.9(62)x9.1(30)	18.9(62)x9.1(30)
c. Material		Carbon Steel	304 SS	Carbon Steel
d. Weight, each	kg (ton)	0.4×10^6 (446)	0.11×10^6 (117)	0.12×10^6(134.5)
3. Tank Insulation				
a. Type		Mineral Fiber w/Al Lag.	Mineral Fiber w/Al. Lag.	
b. Thickness	m (ft)	0.13 (0.417)	0.253 (0.833)	0.13 (0.417)
4. Tank Foundation				
a. Type		Concrete Mat	Concrete Mat	Concrete Mat
b. Thickness	m (ft)	0.61(2) Insul. + 1.52(5) Struct.	1.22(4)Insul. +1.52(5) Struct.	0.61(2)Insul. +1.52(5) Struct.
c. Quantity, Total	$m^3(yd^3)$	13,916 (18,200)	1,539 (2,012)	1,197 (1,566)

		Charging	Discharging	Charging	Discharging
POWER RELATED EQUIPMENT					
1. Steam					
a. Flow, Total	kg/s (lb/hr)	213 (1.69×10^6)	86.65(687,700)	213(1.69×10^6)	86.65(687,700)
b. Pressure	MPa (psia)	12.5 (1,815)	3.2 (468)	12.5 (1,815)	3.1 (443)
c. Temperature	°C (°F)	353 (668)	238 (460)	510 (950)	482 (900)
2. Storage Fluid		Caloria	Caloria	Draw Salt	Draw Salt
a. Flow, Total	kg/s (lb/hr)	1,860(14.76×10^6)	878 (6.97×10^6)	324 (2.57×10^6)	155(1.22×10^6)
b. Pressure (Tank)	MPa (psia)	Atmospheric	Atmospheric	Atmospheric	Atmospheric
c. Temperature (Pump)	°C (°F)	246 (475)	316 (600)	274 (525)	496 (925)
3. Pumps					
a. Quantity		4-25%	2-50%	2-50%	2-50%
b. Type		Horiz. Centrif.	Horiz. Centrif	Vert. Cantilever	Vert. Cantilever
c. Material		Carbon Steel	Carbon Steel	Carbon Steel	316 SS
d. Fluid		Caloria	Caloria	Draw Salt	Draw Salt
e. Capacity, each	m^3/s (gpm)	0.66 (10,540)	0.67 (10,710)	0.086 (1,361)	0.045 (710)
f. Head	m (ft)	41.1 (135)	41.1 (135)	46.3 (152)	46.3 (152)
g. Power (Shaft), each	kWe (hp)	250 (335)	236 (316)	99 (132)	47 (63)
h. Motor size	kWe (hp)	222 (400)	261 (350)	149 (200)	56 (75)
4. Heat Exchangers					
a. Quantity		4-25%	2-50%	4-25%	2-50%
b. Type		Shell & Tube	Drum Type	Shell & Tube	Shell & Tube
c. Material		Carbon Steel	Carbon Steel	304 SS	304 SS
d. Surface Area, Total	$m^2(ft^2)$	9,697 (104,380)	6,224 (67,000)	3,286 (26,450)	2,614 (28,140)
e. Duty, Total	MW_t	262.4	171	111.8	53
ANNUAL ENERGY					
1. Electrical Energy	10^6kWeh	8.04[a]	2.87	0.565	0.5705
2. Electrical Energy(Per Stg)	10^6kWeh	10.91[a]		1.136	
3. Heat Loss (Per Stg)	10^9J(10^9BTU)	49,870 (47.27)		12,270 (11.63)	

Notes:
[a]Annual Electrical Energy (Charging) Includes Charging Heater Drain Pump Power (1st Stage). See Appendix D for Charging Heater Drain Pump Design Data.

The potential problem of storage tank stress magnification due to the combined effects of thermal cycling and bed settlement in dual-media storage tanks, called "ratcheting effect", is beyond the scope of this study and has not been considered.

The draw salt 2-tank sensible heat storage concept utilized in the 2nd stage is the most cost effective 2nd stage concept considered. Molten salt systems have been used in many industrial applications; however, the experience in large systems at the proposed operating temperatures is minimal. Questions relative to long-term decomposition, material compatibility and high temperature storage tank design, i.e., tank configuration, method of insulating, thermal cycling, and type of foundation, must still be answered.

3.4.4 Caloria/Granite - Air/Granite

3.4.4.1 System Description

This is an experiment in 2nd stage storage concepts with the air/rock concept replacing the reference draw salt (2 tank) concept as shown in Figure 3-4. Except for a small increase in first stage storage capacity requirements due to less storage capacity in the air/rock 2nd stage, the first stage Caloria/rock system is the same as the reference case.

The air/rock thermocline storage concept has been proposed by Rockwell International [10] for use in their Advanced Central Receiver Power System Sodium - Cooled Receiver Concept. The air/rock storage system, shown schematically in Figure 3-5, employs a large rock bed, finned-tube heat exchangers, reversible, variable speed air circulating fans and air distribution ducts in a modular design. Unlike the draw salt (2 tank) storage concept, the same heat exchangers and fans are used for charging and discharging, thus simultaneous charging and discharging at the 100% design rating cannot be accomplished. Separate charging and discharging heat exchangers and fans were considered however the cost was prohibitive.

During the charging mode, air is circulated from the bottom of the rock bed at 288°C (550°F) through a heat exchanger (condenser) where it is heated to 482°C (900°F) before returning to the top of the rock bed. During discharging the fans are reversed and air is circulated from the top of the rock bed at 482°C (900°F) through the heat exchanger (superheater), leaving at 288°C (550°F) and returned to the bottom of the rock bed. The temperature of the discharge steam leaving the 2nd stage heat exchanger is 454°C (850°F) rather than 482°C (900°F) as in the reference case, thus a reduction in electrical generation will be realized. The storage system temperature profile is shown in Figure 3-6.

A 20% utilization was used in sizing the rock bed as determined by analytical studies by Rockwell. The fans used are vertical shaft, axial flow type, reversible, with hydraulic coupling type variable speed drives direct-connected to electric motors. The heat exchangers are of the finned-tube type with chrome-moly steel construction.

A-9.80.024

WATER/STEAM RECEIVER (POWER)
STORAGE SYSTEM

1ST STAGE: CALORIA/GRANITE, 2ND STAGE: AIR/GRANITE

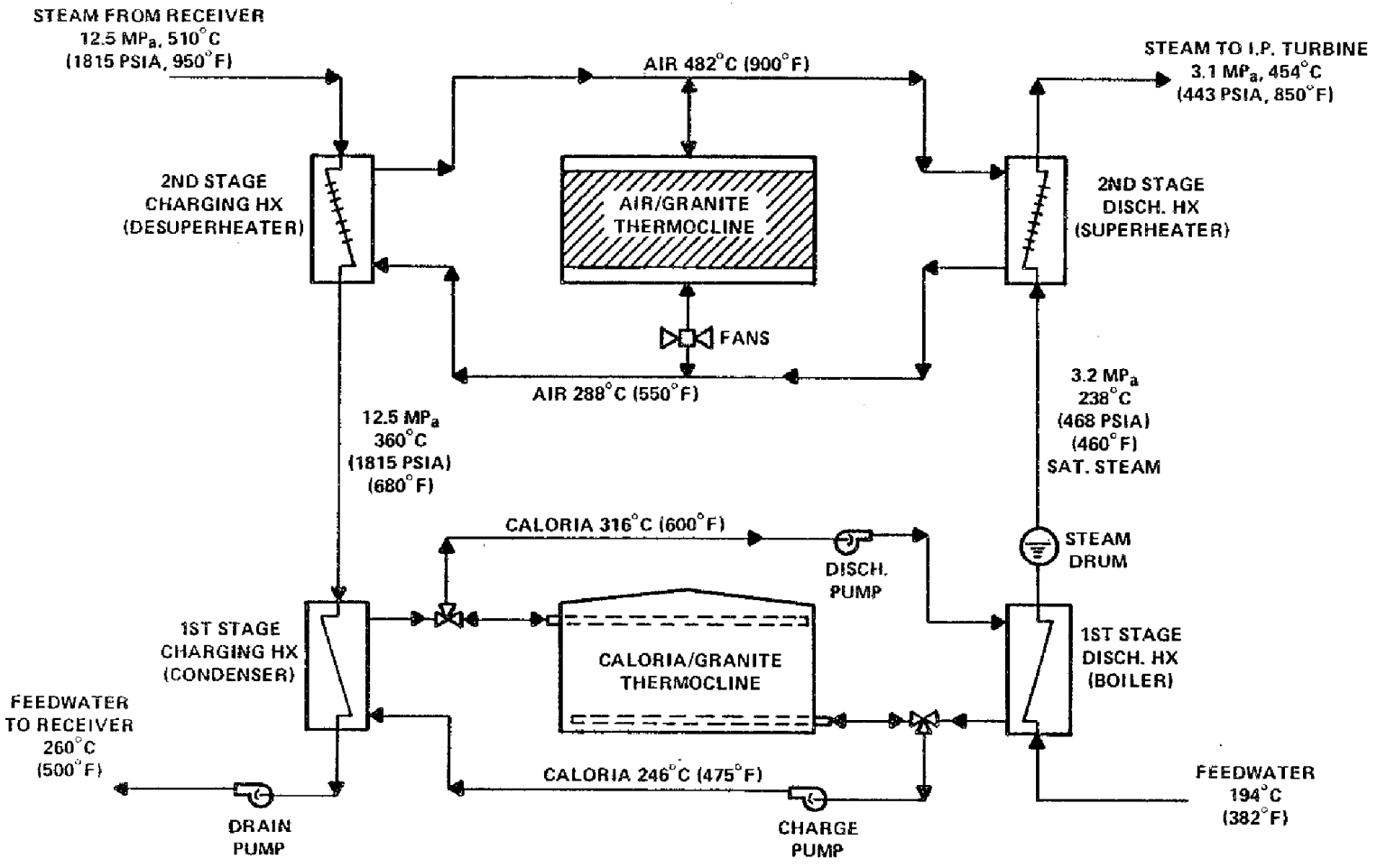

Figure 3–4. THERMAL STORAGE SYSTEM
CALORIA/GRANITE - AIR/GRANITE

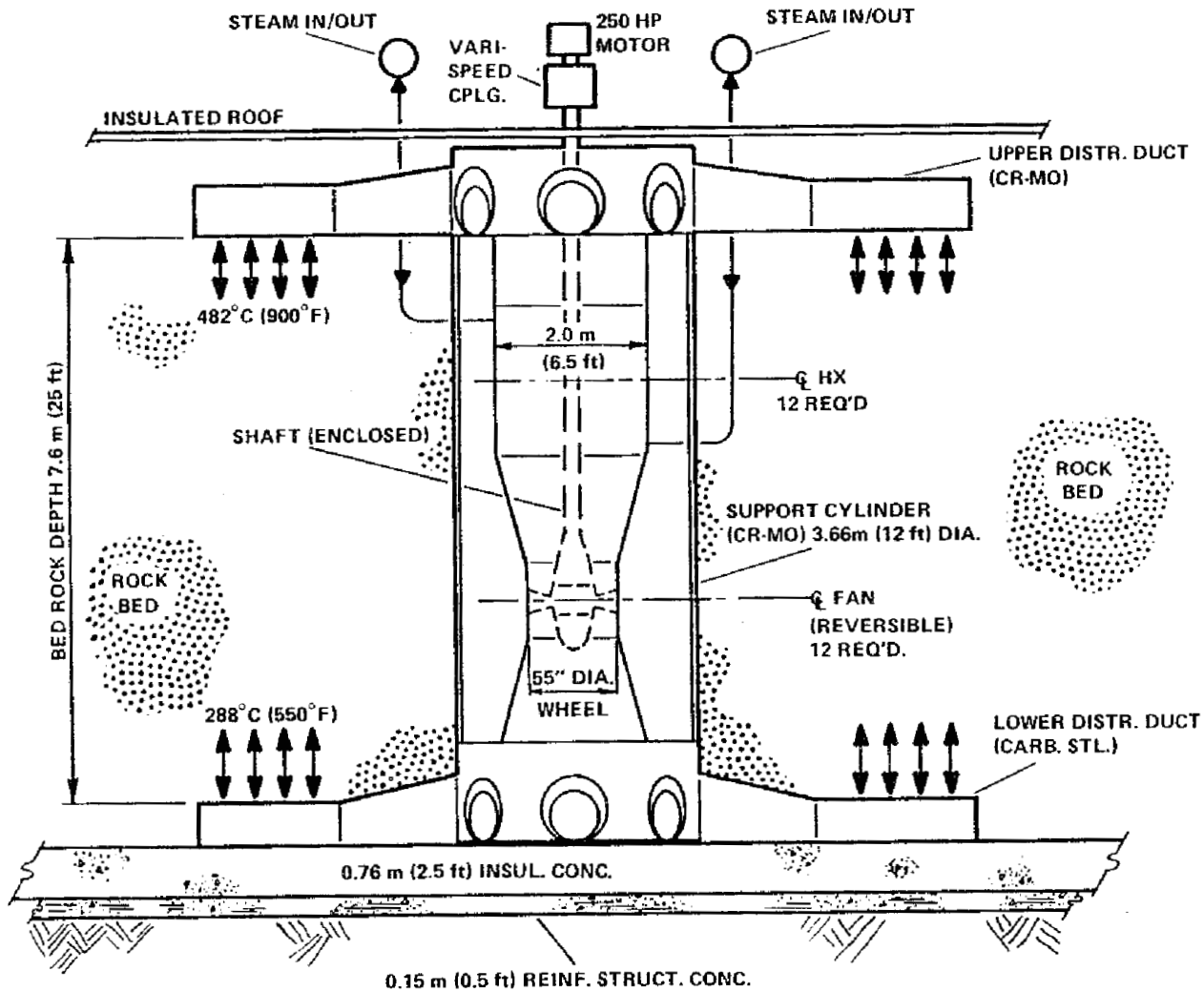

Figure 3–5. AIR/ROCK HX/FAN MODULE (TYPICAL) WATER/STEAM RECEIVER (POWER)

WATER/STEAM (POWER) STORAGE SYSTEM
1ST STAGE: CALORIA/ROCK
2ND STAGE: AIR/GRANITE

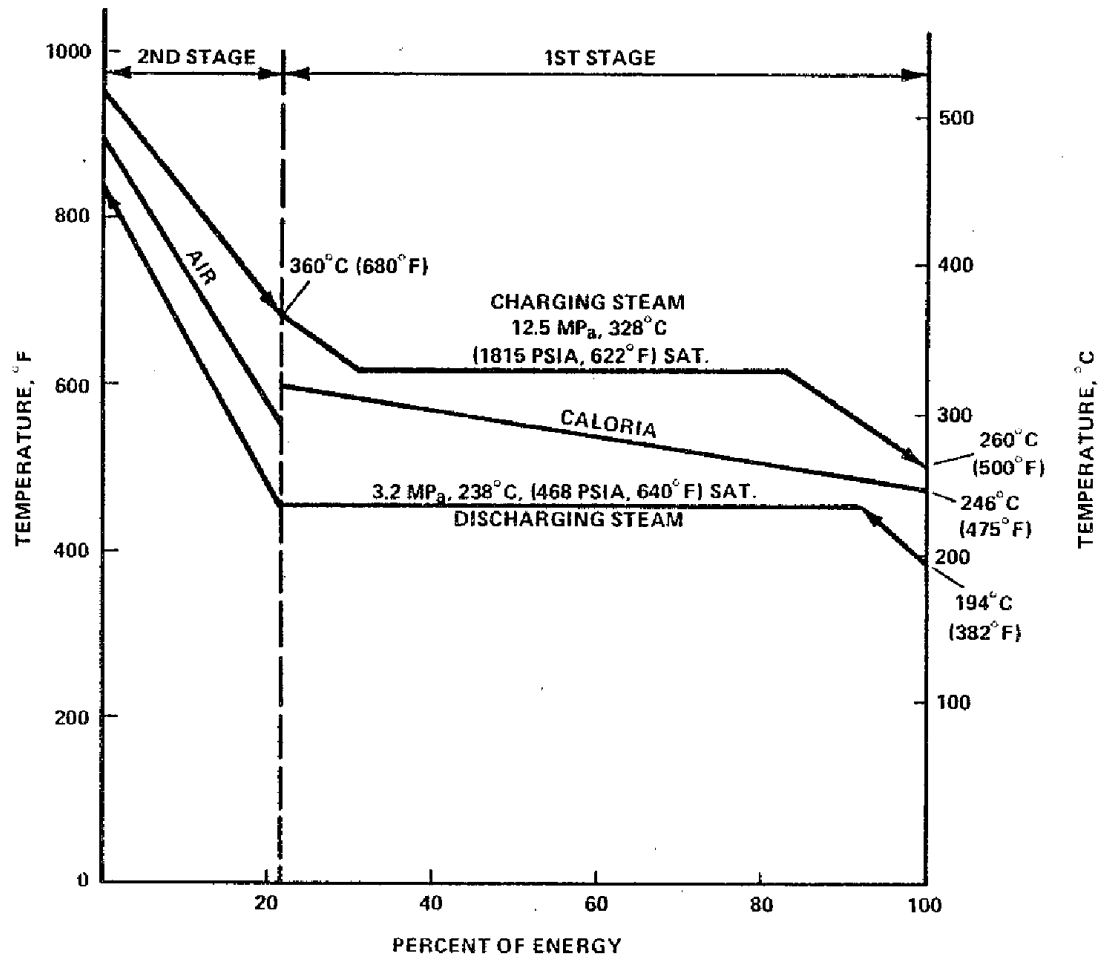

Figure 3–6. TEMPERATURE PROFILE
CALORIA/GRANITE - AIR/GRANITE

3.4.4.2 Thermal Storage Design Data

The conceptual design data for the Caloria/granite - air/granite storage system for 1, 6 and 15 hours of storage is shown in Tables 3-11, 3-12, and 3-13, respectively.

3.4.4.3 Discussion

The air/rock storage concept as designed in this study does not appear economically attractive. Although its low cost media is an advantage, the power related equipment cost, i.e., fans and heat exchangers, and energy cost (fan power) are high, thus penalizing this concept. As with other storage concepts we have studied, an optimization study may reduce this cost; however, it is unlikely that a significant cost reduction could be realized.

3.4.5 Caloria/Granite - Sand Moving Bed

3.4.5.1 System Description

Figure 3-7 shows the application of a sand moving bed storage concept as a second stage, using the baseline Caloria/rock concept in the first stage. The sand moving bed concept shown was proposed by Babcock & Wilcox [11] and is currently under study by D.O.E.

As indicated in Figure 3-7 pulverized sand (SiO_2) is used as the heat transport and storage media in a 2-tank sensible heat storage configuration. The system operates in the same manner as the 2-tank draw salt system previously described. As indicated in Figure 3-8, the 2nd stage storage temperature swing is from 316°C (600°F) to 496°C (925°F).

The sand conveyors used have been proposed by B&W as Archimedes lifts with triple screws. The heat exchanger is a proprietary design currently under development by B&W. A staggered bare tube arrangement is used. The storage tanks are of carbon steel construction, with the hot tank being refractory lined. Both tanks, hot and cold, are provided with external insulation and lagging.

3.4.5.2 Thermal Storage Design Data

Tables 3-14, 3-15, and 3-16 show the conceptual design data for the 2-stage Caloria/rock - sand moving bed system for 1, 6 and 15 hours, respectively.

3.4.5.3 Discussion

The sand moving bed thermal storage concept proposed by B&W is utilized in this study as an experiment on second stage concepts. Because the sand moving bed concept is in its early stages of development there are some technical uncertainties that make sizing and costing of the system difficult. For example, insufficient data is available on Archimedes type lifts in the capacity and inclination angle required. Attempts to get budget Archimedes lift prices from commercial material handling suppliers

Table 3-11. THERMAL STORAGE DESIGN DATA
WATER/STEAM RECEIVER - POWER
CALORIA/GRANITE - AIR/GRANITE

HOURS OF STORAGE: One (1)

		1st STAGE	2nd STAGE
		Caloria/Granite	Air/Granite
STORAGE MEDIA			
1. Operating Temperature			
a. Hot	°C (°F)	316 (600)	482 (900)
b. Cold	°C (°F)	246 (475)	288 (550)
2. Quantity (Total)			
a. Oil, Caloria	kg (ton)	1.03×10^6 (1,131)	
b. Granite	kg (ton)	7.45×10^6 (8,214)	8.69×10^6 (9,580)
ENERGY RELATED EQUIPMENT			
1. Storage Capacity	MW_th	175.1	48.9
2. Storage Tanks			
a. Quantity		Two (2)	Two (2)
b. Size, each (Dia.xHt.)	m(ft)	16.9 (55.6) x 10.7 (35)	15.5(51)x21.3(70)x4.6(15)Bed
c. Material		Carbon Steel	Concrete-Lined Excavation
d. Weight, each	kg (ton)	95,260 (105)	N/A
3. Tank Insulation			
a. Type		Mineral Fiber w/Al.Lag.	Insul.Conc.(Flr.&Walls.) Perlite (Roof)
b. Thickness	m (ft)	0.15 (0.5)	0.91 (3) 0.91 (3)
4. Tank Foundation			
a. Type		Concrete Mat	N/A
b. Thickness	m (ft)	0.61(2)Insul. +1.52(5)Struct.	
c. Quantity, Total	$m^3(yd^3)$	962 (1,258)	

		Charging	Discharging	Charging	Discharging
POWER RELATED EQUIPMENT					
1. Steam					
a. Flow, Total	kg/s (lb/hr)	19(151,000)	89(704,165)	19(151,000)	89(704,165)
b. Pressure	MPa (psia)	12.5 (1,815)	3.2 (468)	12.5 (1,815)	3.1 (443)
c. Temperature	°C (°F)	360 (680)	238 (460)	510 (950)	454 (850)
2. Storage Fluid					
a. Flow, Total	kg/s (lb/hr)	170 (1.35×10^6)	897 (7.12×10^6)	46 (0.36×10^6)	241 (1.91×10^6)
b. Pressure (Tank)	MPa (psia)	Atmospheric	Atmospheric	Atmospheric	Atmospheric
c. Temperature (Pump)	°C (°F)	246 (475)	316 (600)	288 (550)	288 (550)
3. Pumps/Fans[b]					(Governs Fan Design)
		Pumps	Pumps	Fans	Fans
a. Quantity		2-50%	2-50%	2 Oper.	12 Oper.
b. Type		Horiz. Centrif.	Horiz. Centrif.		Axial Reversible
c. Material		Carbon Steel	Carbon Steel		Carbon Steel
d. Fluid		Caloria	Caloria	Air	Air
e. Capacity, each	m^3/s (gpm)	0.12 (1930)	0.69 (10,940)	37(78,000ACFM)	32(68,345ACFM)
f. Head	m (ft)	30.5 (100)	41.1 (135)	0.309 (1.01)W.G.	0.693(2.275)WG
g. Power (Shaft), each	kWe (hp)	34 (46)	241 (323)	142 (191)	280 (376)
h. Motor size	kWe (hp)	37 (50)	261 (350)		236 (450)
4. Heat Exchangers[b]					(Governs HX Design)
a. Quantity		1-100%	2-50%	2 Oper.	12 Oper.
b. Type		Shell & Tube	Drum Type		Fin-Tube
c. Material		Carbon Steel	Carbon Steel		Cr-Mo
d. Surface Area, Total	$m^2(ft^2)$	886 (9,535)	6,359 (68,450)		22,830(245,800)Air Side
e. Duty, Total	MW_t	33.2	175.1	9.3	48.9
ANNUAL ENERGY					
1. Electrical Energy	10^6kWeh	0.447[a]	0.195	0.012	1.360
2. Electrical Energy(Per Stg)	10^6kWeh	0.642[a]		1.972	
3. Heat Loss (Per Stg)	10^9J(10^9BTU)	4,309 (4.084)		2,906 (2.752)	

Notes:
[a]Annual Electrical Energy (Charging) Includes Charging Heater Drain Pump Power (1st Stage). See Appendix D for Charging Heater Drain Pump Design Data.
[b]Same Heat Exchangers and Fans Used for Charging and Discharging on 2nd Stage.

Table 3-12. THERMAL STORAGE DESIGN DATA
WATER/STEAM RECEIVER - POWER
CALORIA/GRANITE - AIR/GRANITE

HOURS OF STORAGE: Six (6)

		1st STAGE		2nd STAGE	
		Caloria/Granite		Air/Granite	
STORAGE MEDIA					
1. Operating Temperature					
a. Hot	°C (°F)	316 (600)		482 (900)	
b. Cold	°C (°F)	246 (475)		288 (550)	
2. Quantity, Total					
a. Oil, Caloria	kg (ton)	6.12×10^6 (6,757)			
b. Granite	kg (ton)	44.67×10^6 (49,240)		43.8×10^6 (48,280)	
ENERGY RELATED EQUIPMENT					
1. Storage Capacity	$MW_t h$	1,050.6		293.4	
2. Storage Tanks					
a. Quantity		Two (2)		Two (2)	
b. Size, each (Dia. x Ht.)	m(ft)	41.0(134.4)x10.7(35)		26.8(23)x28.1(125)x7.6(25)Bed	
c. Material		Carbon Steel		Concrete-lined Excavation	
d. Weight, each	kg (ton)	482,630 (532)		N/A	
3. Tank Insulation					
a. Type		Mineral Fiber w/Al. Lag.		Insul.Conc.(Flr&Walls)Perlite (Roof)	
b. Thickness	m (ft)	0.12 (0.42)		0.76 (2.5)	0.61 (2)
4. Tank Foundation					
a. Type		Concrete Mat		N/A	
b. Thickness	m (ft)	0.61(2) +1.52(5)Struct.			
c. Quantity,Total	$m^3(yd^3)$	5,628 (7,260)			
		Charging	Discharging	Charging	Discharging
POWER RELATED EQUIPMENT					
1. Steam					
a. Flow, Total	kg/s (lb/hr)	114 (905,500)	89(704,165)	114 (905,500)	89 (704,165)
b. Pressure	MPa (psia)	12.5 (1,815)	3.2 (468)	12.5 (1,815)	3.1 (443)
c. Temperature	°C (°F)	360 (680)	238 (460)	510 (950)	454 (850)
2. Storage Fluid					
a. Flow, Total	kg/s (lb/hr)	1022(8.11×10^6)	897(7.12×10^6)	273 (2.17×10^6)	241 (1.91×10^6)
b. Pressure (Tank)	MPa (psia)	Atmospheric	Atmospheric	Atmospheric	Atmospheric
c. Temperature (Pump)	°C (°F)	246 (475)	316 (600)	288 (550)	288 (550)
3. Pumps/Fans[b]		Pumps	Pumps	(Governs Fan Design) Fans	Fans
a. Quantity		2 - 50%	2 - 50%	12 Oper.	12 Oper.
b. Type		Horiz. Centrif	Horiz. Centrif	Axial,Reversible	
c. Material		Carbon Steel	Carbon Steel	Carbon Steel	
d. Fluid		Caloria	Caloria	Air	Air
e. Capacity, each	m^3/s (gpm)	0.73 (11,580)	0.69 (10,940)	37 (77,760 ACFM)	32(68,245ACFM)
f. Head	m (ft)	41.1 (135)	41.1 (135)	0.34 (1.12)WC	0.27(0.875)WC
g. Power, each	kWe (hp)	275 (369)	241 (323)	157 (211)	112 (150)
h. Motor size	kWe (hp)	298 (400)	261 (350)	186 (250)	
4. Heat Exchangers[b]					(Governs HX Design)
a. Quantity		2 - 50%	2 - 50%	12 Oper.	12 Oper.
b. Type		Shell & Tube	Drum Type		Fin-Tube
c. Material		Carbon Steel	Carbon Steel		Cr. Mo.
d. Surface Area, Total	$m^2(ft^2)$	5,314 (57,200)	6,359 (68,450)		22,840 (245,860)Air Side
e. Duty, Total	MW_t	199.4	175.1	55.6	48.9
ANNUAL ENERGY					
1. Electrical Energy	10^6kWeh	3.15[a]	1.18	4.04	3.15
2. Electrical Energy (Total/Stg)	10^6kWeh	4.33[a]		7.19	
3. Heat Loss (Per Stg.)	10^9J(10^9 BTU)	18,727 (17.76)		14,103 (13.37)	

Notes:
[a]Annual Electrical Energy (Charging) Includes Charging Heater Drain Pump Power (1st Stage). See Appendix D for Charging Heater Drain Pump Design Data.
[b]Same Heat Exchangers and Fans Used for Charging and Discharging on 2nd Stage.

Table 3-13. THERMAL STORAGE DESIGN DATA
WATER/STEAM RECEIVER - POWER
CALORIA/GRANITE - AIR/GRANITE

HOURS OF STORAGE: Fifteen (15)

		1st STAGE Caloria/Granite	2nd STAGE Air/Granite
STORAGE MEDIA			
1. Operating Temperature			
a. Hot	°C (°F)	316 (600)	482 (900)
b. Cold	°C (°F)	246 (475)	288 (550)
2. Quantity, Total			
a. Oil, Caloria	kg (ton)	15.35×10^6 (16,920)	
b. Granite	kg (ton)	111.77×10^6 (122,200)	99.48×10^6 (109,655)
ENERGY RELATED EQUIPMENT			
1. Storage Capacity	$MW_t h$	2,626.5	733.5
2. Storage Tanks			
a. Quantity		Six (6)	Three (3)
b. Size, each (Dia.xHt.)	m(ft)	37.6 (123.33)x10.7(35)	28.9(95)x58.5(192)x7.6(25) Bed
c. Material		Carbon Steel	Concrete-Lined Excavation
d. Weight, each	kg (ton)	410,960 (452)	N/A
3. Tank Insulation			
a. Type		Mineral Fiber w/Al Lag.	Insul.Conc.(Flr&Walls) Perlite (Roof)
b. Thickness	m (ft)	0.13 (0.417)	0.76 (2.5) 0.61 (2)
4. Tank Foundation			
a. Type		Concrete Mat	N/A
b. Thickness	m (ft)	0.61(2) Insul. + 1.52(5) Struct.	
c. Quantity, Total	$m^3(yd^3)$	14,210 (18,582)	

		Charging	Discharging	Charging	Discharging
POWER RELATED EQUIPMENT					
1. Steam					
a. Flow, Total	kg/s (lb/hr)	213 (1.69×10^6)	89(704,165)	213(1.69×10^6)	89(704,165)
b. Pressure	MPa (psia)	12.5 (1,815)	3.2 (468)	12.5 (1,815)	3.1 (442)
c. Temperature	°C (°F)	260 (680)	238 (460)	510 (950)	454 (850)
2. Storage Fluid					
a. Flow, Total	kg/s (lb/hr)	1,900(15.08×10^6)	897 (7.12×10^6)	509 (4.04×10^6)	241(1.91×10^6)
b. Pressure (Tank)	MPa (psia)	Atmospheric	Atmospheric	Atmospheric	Atomospheric
c. Temperature (Pump)	°C (°F)	246 (475)	316 (600)	288 (550)	288 (550)
3. Pumps/Fans[b]	Pumps	Pumps	Pumps	(Governs Fan Design) Fans	Fans
a. Quantity		4-25%	2-50%	18 Oper.	10 Oper.
b. Type		Horiz. Centrif.	Horiz. Centrif	Axial, Reversible	
c. Material		Carbon Steel	Carbon Steel	Carbon Steel	
d. Fluid		Caloria	Caloria	Air	Air
e. Capacity, each	m^3/s (gpm)	0.68 (10,770)	0.69 (10,940)	46(96,535ACFM)	39(82,015ACFM)
f. Head	m (ft)	41.1 (135)	41.1 (135)	0.41(1.34)WG	0.47(1.55)WG
g. Power (Shaft), each	kWe (hp)	255 (342)	241 (323)	233 (323)	229 (307)
h. Motor size	kWe (hp)	222 (400)	261 (350)	261 (350)	
4. Heat Exchangers[b]				(Governs HX Design)	
a. Quantity		4-25%	2-50%	18 Oper.	10 Oper.
b. Type		Shell & Tube	Drum Type	Fin-Tube	
c. Material		Carbon Steel	Carbon Steel	Cr. Mo	
d. Surface Area, Total	$m^2(ft^2)$	9,906 (106,630)	6,359 (68,450)	39,630 (426,600)	Air Side
e. Duty, Total	MW_t	371.6	175.1	103.6	48.9
ANNUAL ENERGY					
1. Electrical Energy	10^9kWeh	9.21[a]	2.93	9.63	7.51
2. Electrical Energy(Per Stg)	10^6kWeh	11.14[a]		17.14	
3. Heat Loss (Per Stg)	10^9J(10^9BTU)	50,619 (47.98)		30,869 (29.26)	

Notes:
[a]Annual Electrical Energy (Charging) Includes Charging Heater Drain Pump Power (1st Stage). See Appendix D for Charging Heater Drain Pump Design Data.

A-8.80.026

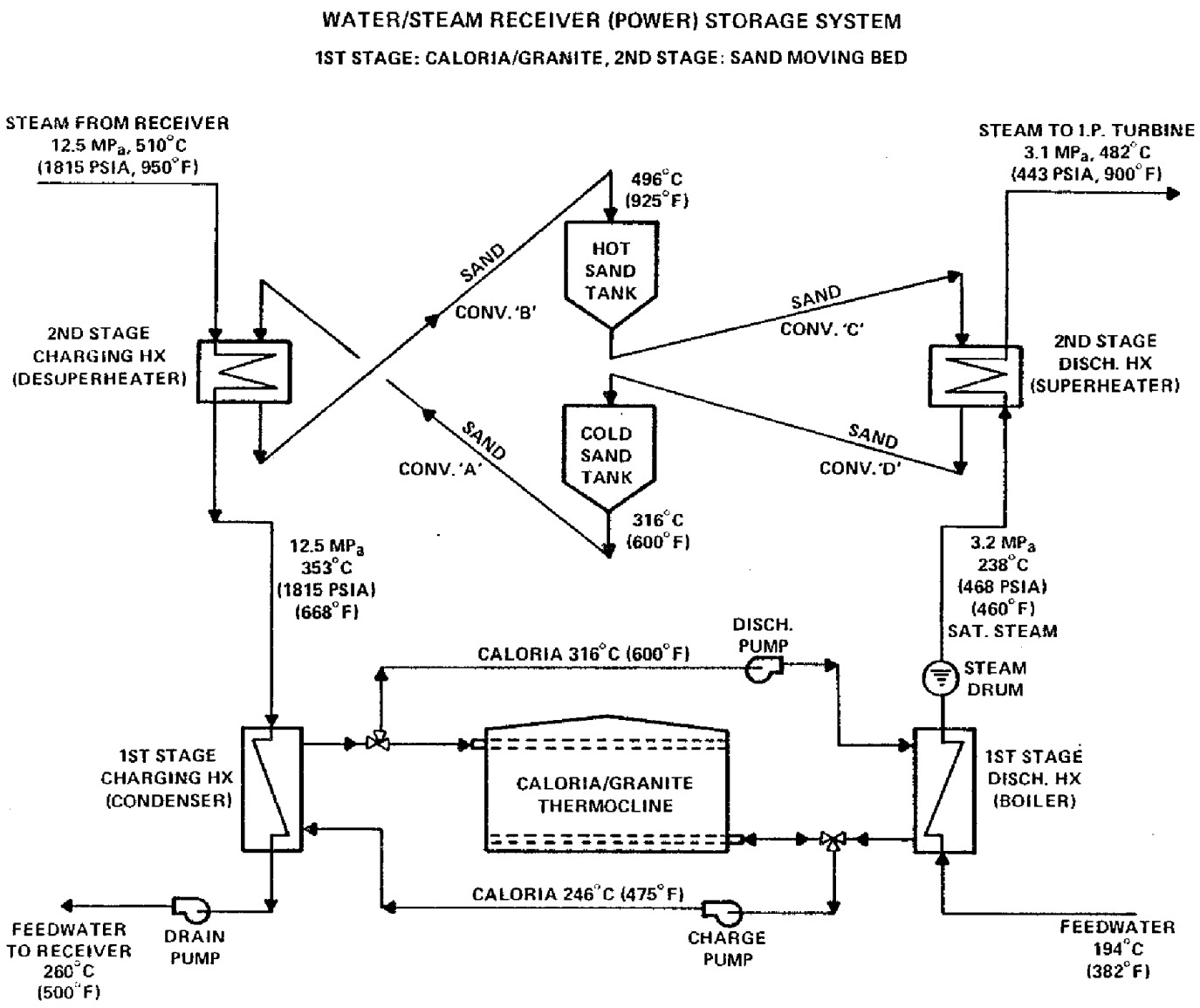

Figure 3–7. THERMAL STORAGE SYSTEM CALORIA/GRANITE - SAND MOVING BED

WATER/STEAM (POWER)
1ST STAGE: CALORIA/GRANITE
2ND STAGE: SAND MOVING BED (B&W)

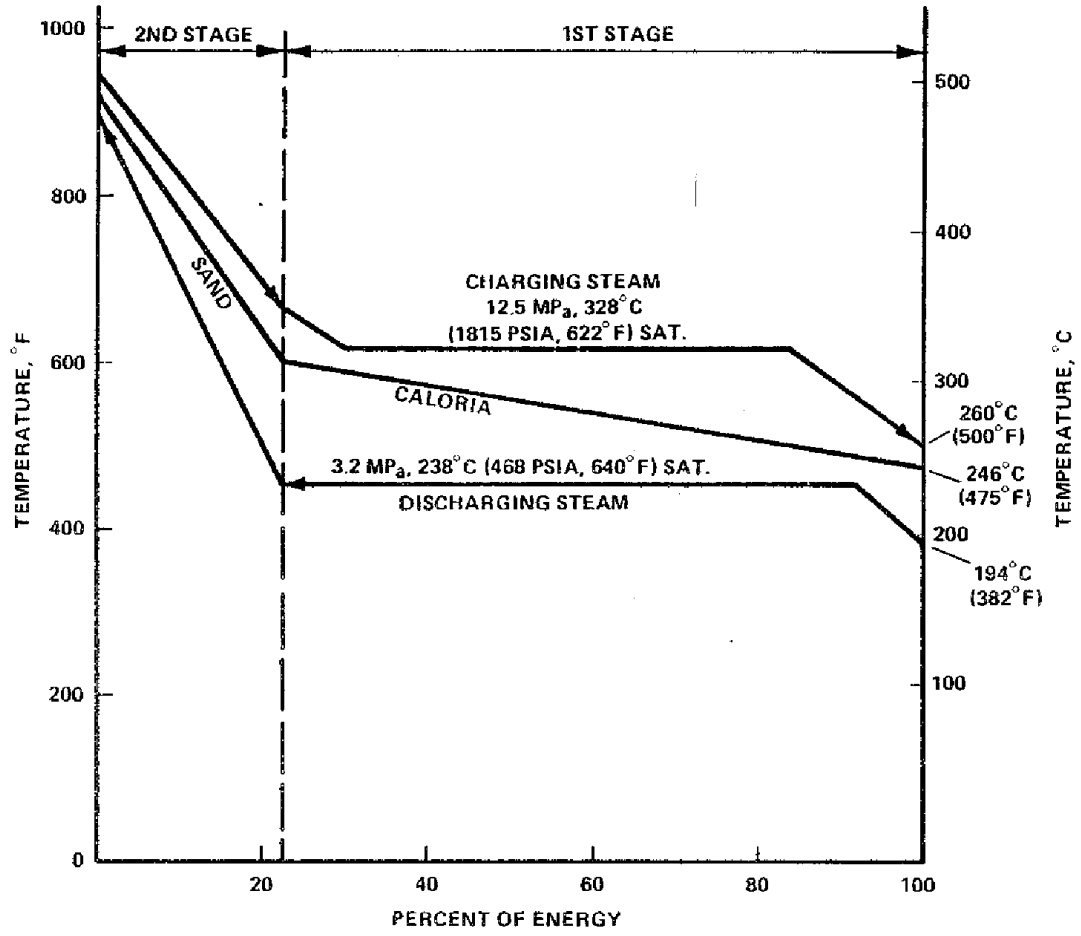

Figure 3–8. THERMPERATURE PROFILE
CALORIA/GRANITE - SAND MOVING BED

Table 3-14. THERMAL STORAGE DESIGN DATA
WATER/STEAM RECEIVER - POWER
CALORIA/GRANITE - SAND MOVING BED

HOURS OF STORAGE: One (1)

		1st STAGE Caloria/Granite		2nd STAGE Sand Moving Bed	
STORAGE MEDIA					
1. Operating Temperature					
a. Hot	°C (°F)	316 (600)		496 (925)	
b. Cold	°C (°F)	246 (475)		316 (600)	
2. Quantity (Total)					
a. Oil, Caloria	kg (ton)	1.0×10^6 (1,107)			
b. Granite	kg (ton)	7.3×10^6 (8,040)			
c. Sand (Pulv.)	kg (ton)			1.05×10^6 (1,160)	
ENERGY RELATED EQUIPMENT					
1. Storage Capacity	$MW_t h$	171		53	
2. Storage Tanks				Hot Tank	Cold Tank
a. Quantity		Two (2)		One (1)	One (1)
b. Size, each (Dia.xHt.)	m(ft)	16.8 (55) x 10.7 (35)		12.2(40)x6.1(20)	12.2(40)x6.1(20)
c. Material		Carbon Steel		Carbon Steel	Carbon Steel
d. Weight, each	kg (ton)	93,895 (103.5)		49,000 (54)	49,000 (54)
3. Tank Insulation					
a. Type		Mineral Fiber w/Al. Lag.	Insul. Brick (Interior)	Min. Fiber (Exterior)	Min. Fiber (Exterior)
b. Thickness	m (ft)	0.15 (0.5)	0.23(0.75)	0.20(0.67)	0.15 (0.5)
4. Tank Foundation					
a. Type		Concrete Mat		Concrete Mat	Concrete Mat
b. Thickness	m (ft)	0.61(2) Insul. +1.52(5) Struct.		2.44(8)	2.44(8)
c. Quantity, Total	$m^3(yd^3)$	942 (1,232)		445 (582)	445 (582)

		Charging	Discharging	Charging	Discharging
POWER RELATED EQUIPMENT					
1. Steam					
a. Flow, Total	kg/s (lb/hr)	19(151,000)	86.65(687,700)	19(151,000)	86.65(687,700)
b. Pressure	MPa (psia)	12.5 (1,815)	3.2 (468)	12.5 (1,815)	3.1 (443)
c. Temperature	°C (°F)	353 (668)	238 (460)	510 (950)	482 (900)
2. Storage Fluid		Caloria	Caloria	Pulv. Sand	Pulv. Sand
a. Flow, Total	kg/s (lb/hr)	166 (1.37×10^6)	878 (6.97×10^6)	55.4(440,000)	292 (2.32×10^6)
b. Pressure (Tank)	MPa (psia)	Atmospheric	Atmospheric	Atmospheric	Atmospheric
c. Temperature (Pump)	°C (°F)	246 (475)	316 (600)	316 (600)	496 (925)
3. Pumps/Lifts		Pumps	Pumps	------Archimedes Lifts------	
a. Quantity		2-50%	2-50%	Two (2)	Two (2)
b. Type		Horiz. Centrif.	Horiz. Centrif.	Screw Conv.	Screw Conv.
c. Material		Carbon Steel	Carbon Steel	Carbon Steel	Cr.-Mo.
d. Fluid		Caloria	Caloria	Pulv. Sand	Pulv. Sand
e. Capacity, each	m^3/s (gpm)	0.12 (1890)	0.67 (10,710)	55 kg/s(220tph)	292kg/s(1160tph)
f. Head (Lift)	m (ft)	30.5 (100)	41.1 (135)	1@10(33)1@12.2(40)	1@14.6(48)1@20.7(68)
g. Power (Shaft), each	kWe (hp)	34 (45)	236 (316)	1@22(30)1@27(36)	1@171(229)1@434(324)
h. Motor size	kWe (hp)	37 (50)	261 (350)	1@22(30),1@30(40)	1@186(250)1@261(350)
4. Heat Exchangers					
a. Quantity		1-100%	2-50%	One (1)	One (1)
b. Type		Shell & Tube	Drum Type	Staggered Tube	Staggered Tube
c. Material		Carbon Steel	Carbon Steel	Cr-Mo	Cr-Mo
d. Surface Area, Total	$m^2(ft^2)$	867 (9,333)	6,224 (67,000)	247 (2,660)	1,368 (14,728)
e. Duty, Total	MW_t	32.5	171	10	53
ANNUAL ENERGY					
1. Electrical Energy	10^6kWeh	0.4375[a]	0.191	0.106	0.169
2. Electrical Energy(Per Stg)	10^6kWeh	0.6285[a]		0.275	
3. Heat Loss (Per Stg)	10^9J(10^9BTU)	4,245 (4.024)		3,693 (3.500)	

Notes:
[a]Annual Electrical Energy (Charging) Includes Charging Heater Drain Pump Power (1st Stage). See Appendix D for Charging Heater Drain Pump Design Data.

Table 3-15. THERMAL STORAGE DESIGN DATA
WATER/STEAM RECEIVER - POWER
CALORIA/GRANITE - SAND MOVING BED

HOURS OF STORAGE: Six (6)

		1st STAGE Caloria/Granite		2nd STAGE Sand Moving Bed	
STORAGE MEDIA					
1. Operating Temperature					
a. Hot	°C (°F)	316 (600)		496 (925)	
b. Cold	°C (°F)	246 (475)		316 (600)	
2. Quantity, Total					
a. Oil, Caloria	kg (ton)	6.0×10^6 (6,614)			
b. Granite	kg (ton)	43.7×10^6 (48,198)			
c. Sand (Pulv.)	kg (ton)			6.3×10^6 (6960)	
ENERGY RELATED EQUIPMENT					
1. Storage Capacity	MW_th	1,026		318	
2. Storage Tanks				Hot Tank	Cold Tank
a. Quantity		Two (2)		Eight (8)	Eight (8)
b. Size, each (Dia. x Ht.)	m(ft)	40.5(133)x10.7(35)		10.7(35)x5.5(18)	10.7(35)x5.5(18)
c. Material		Carbon Steel		Carbon Steel	Carbon Steel
d. Weight, each	kg (ton)	638,215 (703.5)		37,000(40.75)	37,650(41.5)
3. Tank Insulation					
a. Type		Mineral Fiber w/Al. Lag.	Insul.Brick (Interior)	Min. Fiber (Exterior)	Min. Fiber (Exterior)
b. Thickness	m (ft)	0.13 (0.417)	0.23(0.75)	0.15(0.5)	0.13(0.42)
4. Tank Foundation					
a. Type		Concrete Mat		Conc. Mat	Conc. Mat
b. Thickness	m (ft)	0.61(2)Insul.+1.52(5)Struct.		2.44 (8)	2.44 (8)
c. Quantity,Total	$m^3(yd^3)$	5,508 (7,204)		2887 (3776)	2887 (3776)
		Charging	Discharging	Charging	Discharging
POWER RELATED EQUIPMENT					
1. Steam					
a. Flow, Total	kg/s (lb/hr)	114 (905,500)	86.65(687,700)	114 (905,500)	86.65 (687,700)
b. Pressure	MPa (psia)	12.5 (1,815)	3.2 (468)	12.5 (1,815)	3.1 (443)
c. Temperature	°C (°F)	353 (668)	238 (460)	510 (950)	482 (900)
2. Storage Fluid		Caloria	Caloria	Pulv. Sand	Pulv. Sand
a. Flow, Total	kg/s (lb/hr)	1000(7.94×10^6)	878(6.97×10^6)	333 (2.64×10^6)	292 (2.3×10^6)
b. Pressure (Tank)	MPa (psia)	Atmospheric	Atmospheric	Atmospheric	Atmospheric
c. Temperature (Pump)	°C (°F)	246 (475)	316 (600)	316 (600)	496 (925)
3. Pumps/Lifts		Pumps	Pumps	-------Archimedes Lifts-------	
a. Quantity		2 - 50%	2 - 50%	Sixteen (16)	Sixteen (16)
b. Type		Horiz. Centrif	Horiz. Centrif	Screw Conv.	Screw Conv.
c. Material		Carbon Steel	Carbon Steel	Carbon Steel	Cr-Mo
d. Fluid		Caloria	Caloria	Pulv. Sand	Pulv. Sand
e. Capacity, each	m^3/s (gpm)	0.72 (11,340)	0.67 (10,710)	42kg/s(165tph)	37kg/s(145tph)
f. Head	m (ft)	41.1 (135)	41.1 (135)	8@8.2(27)8@10.7(35)	8@8.2(27)8@10.7(35)
g. Power, each	kWe (hp)	269 (361)	236 (315)	8@17(23)8@22(30)	8@15(20),8@19(26)
h. Motor size	kWe (hp)	298 (400)	261 (350)	8@19(25),8@22(30)	8@19(25),8@22(30)
4. Heat Exchangers					
a. Quantity		2 - 50%	2 - 50%	Eight (8)	Eight (8)
b. Type		Shell & Tube	Drum Type	Staggered Tube	Staggered Tube
c. Material		Carbon Steel	Carbon Steel	Cr-Mo	Cr-Mo
d. Surface Area, Total	$m^2(ft^2)$	5,202 (56,000)	6,224 (67,000)	1481 (15,946))	1368 (14,728)
e. Duty, Total	MW_t	195	171	60	53
ANNUAL ENERGY					
1. Electrical Energy	10^6kWeh	3.080[a]	1.148	0.529	0.534
2. Electrical Energy (Total/Stg)	10^6kWeh	4.228[a]		1.063	
3. Heat Loss	10^9J(BTU)	18,462 (17.50)		27,958 (26.50)	

Notes:
[a]Annual Electrical Energy (Charging) Includes Charging Heater Drain Pump Power (1st Stage). See Appendix D for Charging Heater Drain Pump Design Data.

Table 3-16. THERMAL STORAGE DESIGN DATA
WATER/STEAM RECEIVER - POWER
CALORIA/GRANITE - SAND MOVING BED

HOURS OF STORAGE: Fifteen (15)

		1st STAGE	2nd STAGE
		Caloria/Granite	Sand Moving Bed
STORAGE MEDIA			
1. Operating Temperature			
a. Hot	°C (°F)	316 (600)	496 (925)
b. Cold	°C (°F)	246 (475)	316 (600)
2. Quantity, Total			
a. Oil, Caloria	kg (ton)	15.0×10^6 (16,583)	
b. Granite	kg (ton)	1.09×10^8 (120,600)	15.8×10^6 (17,400)
c. Sand (Pulv.)	kg (ton)		

ENERGY RELATED EQUIPMENT				
1. Storage Capacity	$MW_t h$	2,565	795	
2. Storage Tanks			Hot Tank	Cold Tank
a. Quantity		Six (6)	Four (4)	Four (4)
b. Size, each (Dia.xHt.)	m(ft)	37.2 (122)x10.7(35)	19.8(65)x8.5(28)	19.8(65)x8.5(28)
c. Material		Carbon Steel	Carbon Steel	Carbon Steel
d. Weight, each	kg (ton)	0.4×10^6 (446)	147,000 (162)	147,000 (162)
3. Tank Insulation				
a. Type		Mineral Fiber w/Al Lag.	Insul.Brick (Interior)	Min.Fiber (Exterior) / Min.Fiber (Exterior)
b. Thickness	m (ft)	0.13 (0.417)	0.22 (0.75) 0.15 (0.5)	0.13 (0.42)
4. Tank Foundation				
a. Type		Concrete Mat	Conc. Mat.	Conc. Mat.
b. Thickness	m (ft)	0.61(2) Insul. + 1.52(5) Struct.	2.44 (8)	2.44 (8)
c. Quantity, Total	$m^3(yd^3)$	12,916 (18,200)	4014 (5250)	4014 (5250)

		Charging	Discharging	Charging	Discharging
POWER RELATED EQUIPMENT					
1. Steam					
a. Flow, Total	kg/s (lb/hr)	213 (1.69×10^6)	86.65(687,700)	213(1.69×10^6)	86.65(687,700)
b. Pressure	MPa (psia)	12.5 (1,815)	2.2 (468)	12.5 (1,815)	3.1 (443)
c. Temperature	°C (°F)	353 (668)	238 (460)	510 (950)	482 (900)
2. Storage Fluid		Caloria	Caloria	Pulv. Sand	Pulv. Sand
a. Flow, Total	kg/s (lb/hr)	1,860(14.76×10^6)	878 (6.97×10^6)	620 (4.92×10^6)	292(2.32×10^6)
b. Pressure (Tank)	MPa (psia)	Atmospheric	Atmospheric	Atmospheric	Atomospheric
c. Temperature (Pump)	°C (°F)	246 (475)	316 (600)	316 (600)	496 (925)
3. Pumps/Fans		Pumps	Pumps	------Archimedes Lifts------	
a. Quantity		4-25%	2-50%	Eight (8)	Eight (8)
b. Type		Horiz. Centrif.	Horiz. Centrif	Screw Conv.	Screw Conv.
c. Material		Carbon Steel	Carbon Steel	Carbon Steel	Cr-Mo
d. Fluid		Caloria	Caloria	Pulv. Sand	Pulv. Sand
e. Capacity, each	m^3/s (gpm)	0.66 (10,540)	0.67 (10,710)	155kg/s(615tph)	73kg/s(290tph)
f. Head	m (ft)	41.1 (135)	41.1 (135)	4@15.2(50)4@21.3(70)	4@12.2(40)4@18.3(60)
g. Power (Shaft), each	kWe (hp)	250 (335)	236 (316)	4@94(126)4@132(177)	4@36(48)4@53(71)
h. Motor size	kWe (hp)	223 (400)	261 (350)	4@112(150)4@150(200)	4@56(75)4@75(100)
4. Heat Exchangers					
a. Quantity		4-25%	2-50%	Four (4)	Four (4)
b. Type		Shell & Tube	Drum Type	Staggered Tube	Staggered Tube
c. Material		Carbon Steel	Carbon Steel	Cr-Mo	Cr-Mo
d. Surface Area, Total	$m^2(ft^2)$	9,697 (104,380)	6,224 (67,000)	2,758 (29,686)	1,368 (14,728)
e. Duty, Total	MW_t	363.4	171	111.7	53
ANNUAL ENERGY					
1. Electrical Energy	10^6kWeh	8.04[a]	2.87	2.60	2.16
2. Electrical Energy(Per Stg)	10^6kWeh	10.91[a]		4.76	
3. Heat Loss (Per Stg)	10^9J(10^9BTU)	49,870(47.27)		45,017 (42.67)	

Notes:
[a]Annual Electrical Energy (Charging) Includes Charging Heater Drain Pump Power (1st Stage). See Appendix D for Charging Heater Drain Pump Design Data.

were unsuccessful. Consequently the Archimedes lift cost used was twice the cost of a bucket elevator for the same capacity and lift, as recommended verbally by B&W. The conveyor power requirements were based on a lift efficiency of 26.6%, also B&W, and a combined gear and motor efficiency of 85%. Another area of concern is the heat exchanger, which could be a major development item. The heat transfer surface areas used in the study were provided by B&W.

3.4.6 Pressurized Water - Draw Salt (2 tank)

3.4.6.1 System Description

Both above ground and underground pressurized water storage systems were considered as an experiment on first stage concepts.

A two-stage thermal storage system using an underground pressurized water storage first stage and draw salt (2 tank) second stage is shown in Figure 3-9.

A principal proponent of underground pressurized water storage in steel-lined cavities is James L. Dooley of R&D Associates [12]. Also a thermal energy storage conceptual design study by General Electric Company [13] has identified several underground pressurized water concepts applicable to near term electric utility applications. This study deals primarily with pressurized water storage in both underground steel-lined cavities and above ground steel pressure vessels.

The underground pressurized water storage concept proposed for the water/steam receiver power application utilizes an underground steel-lined cavity as shown in Figure 3-9. The cavity would be located approximately 549m (1800 ft.) below grade in a solid rock formation. Demineralized water is used as the storage media.

As indicated in Figure 3-9 receiver steam is supplied during charging directly into the underground water containment where it is condensed, thereby increasing the pressure and temperature of the water. During discharging, steam is admitted through a pressure control valve which maintains 3.2 MPa (468 psia) pressure at the inlet of the 2nd stage superheater. As steam is removed from storage the pressure in the cavity decreases as more water is flashed to steam. The pressure in the cavity ranges from 11.9 MPa (1725 psia) fully charged to 4.1 MPa (600 psia) fully discharged, with a corresponding temperature range of 324°C (615°F) to 252°C (486°F), or 72°C (129°F). For the six hour storage case, approximately 44% of the total water inventory is flashed to steam. Although not shown on the diagram, it is necessary to add a small amount of feedwater to storage during the charging mode in order to achieve a mass and enthalpy balance between charging and discharging.

Storage steam condensed in the turbine cycle during the discharge mode is stored as deaerated condensate for use as receiver feedwater during the charging mode.

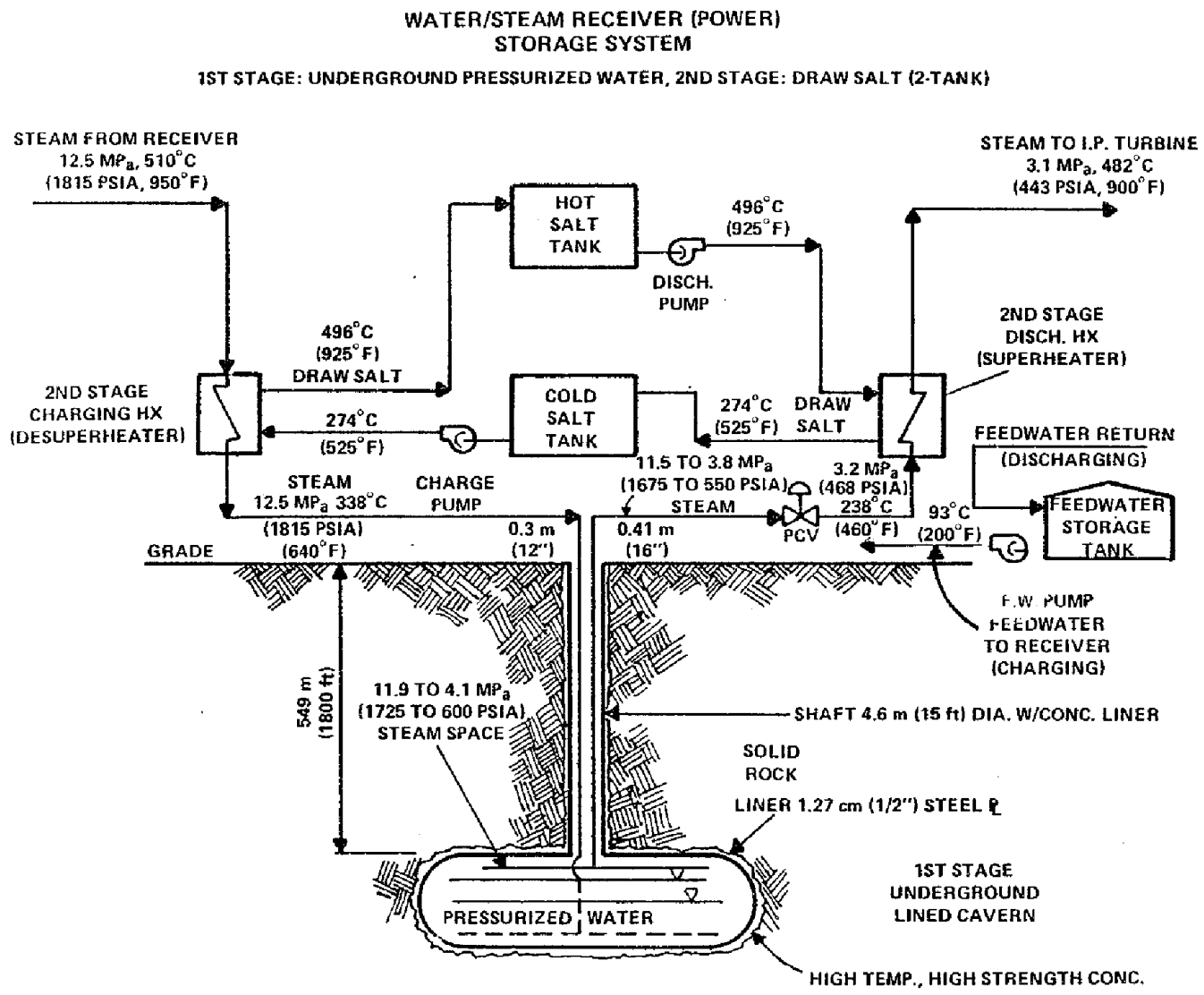

Figure 3–9. THERMAL STORAGE SYSTEM
UNDERGROUND PRESSURIZED WATER - DRAW SALT (2-TANK)

The temperature profile for the 2-stage underground pressurized water-draw salt (2 tank) storage system is shown in Figure 3-10.

Above ground pressurized water storage was also investigated for the one and 6 hour cases. The containment in this case is welded steel pressure vessels, otherwise the pressurized water storage concepts are basically identical. The storage tanks required for above ground storage were designed for 13.0 MPa (1890 psig) and 343°C (650°F), using ASTM A516-70 carbon steel plate and ASME B&PV Code-Section VIII. Each vessel (there are ten for 1-hour storage) is 1.8 m (6 ft.) inside diameter by 44.8m (147 ft.) shell length. Wall thickness is 0.106m (0.349 ft.) nominal. As expected, above ground pressurized water storage proved to be more economical than below ground for the 1-hour storage case; however, the results are reversed for the 6-hour storage case. Consequently further study of above ground pressurized water storage was discontinued.

The 2-tank draw salt second stage storage concept is essentially the same as the reference concept previously described.

3.4.6.2 Thermal Storage Design Data

The conceptual design data for the underground pressurized water - draw salt (2 tank) combination is shown in Tables 3-17, 3-18, and 3-19 for 1, 6 and 15 hours storage, respectively. The design data for the above ground pressurized water cases for 1 and 6 hours of storage is shown in Tables 3-20 and 3-21, respectively.

3.4.6.3 Discussion

Underground pressurized water storage in steel-lined cavities appears to offer the lowest cost of all the first stage storage concepts investigated above approximately six hours of storage. However, there are many technical uncertainties associated with this concept. The underground cavity must be located in competent hard rock, thus potential sites are limited. A listing of potential sites contained in the Dooley report [12] are included in Appendix C of this report. The behavior of large steel-lined cavities when subjected to thermal and pressure cycling has not been demonstrated. Underground construction, in general, poses uncertainties relative to construction methods and costs which may not be reflected in this study.

As previously mentioned, above ground pressurized water storage is more economical than underground storage in small storage capacities. However, even in small storage capacities, above ground pressurized water storage does not compare favorably against the reference dual-media sensible heat storage concept.

WATER/STEAM RECEIVER (POWER) STORAGE SYSTEM
1ST STAGE: PRESSURIZED WATER (UNDERGROUND LINED CAVERN)
2ND STAGE: DRAW SALT 2-TANK

NOTE: ALSO APPLICABLE FOR PRESSURIZED WATER (ABOVE GROUND)

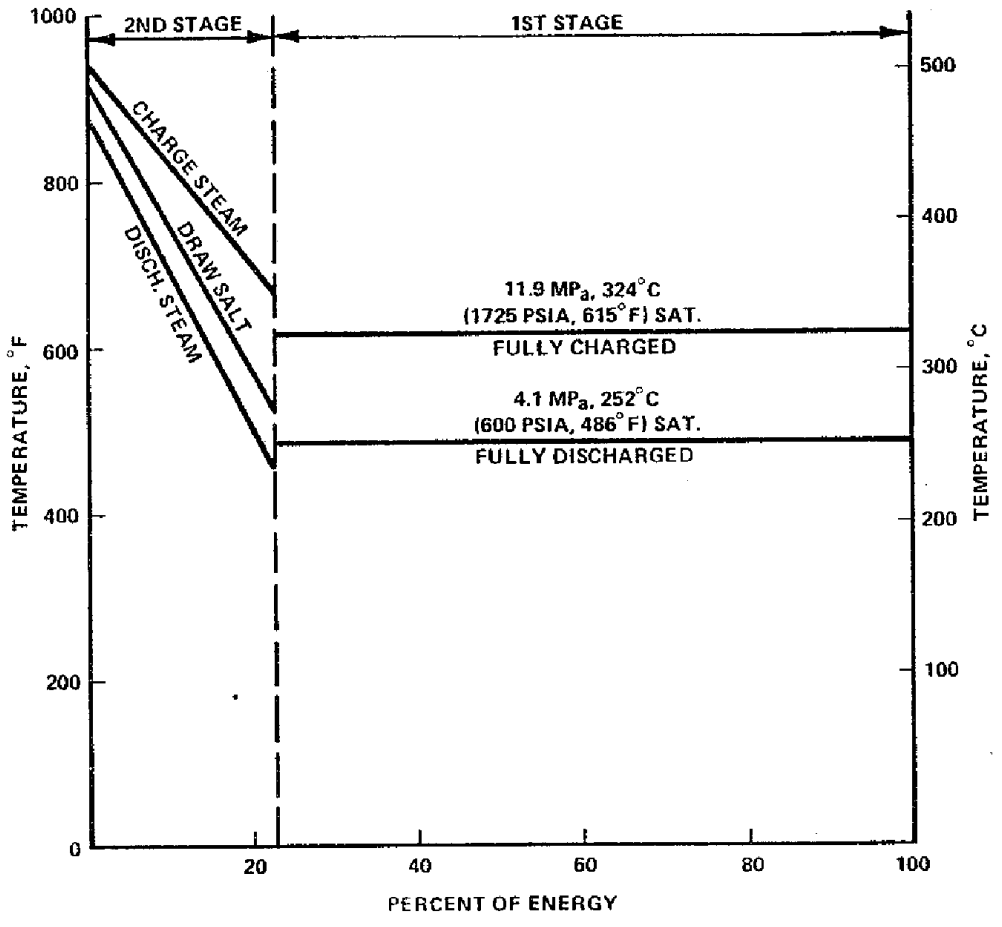

Figure 3–10. TEMPERATURE PROFILE
UNDERGROUND PRESSURIZED WATER - DRAW SALT (2-TANK)

Table 3-17. THERMAL STORAGE DESIGN DATA
WATER/STEAM RECEIVER - POWER
UNDERGROUND PRESSURIZED WATER - DRAW SALT (2 TANK)

HOURS OF STORAGE: One (1)

		1st STAGE	2nd STAGE
		Underground Pressurized Water	Draw Salt (2 Tank)
STORAGE MEDIA			
1. Operating Temperature			
a. Hot	°C (°F)	324 (615)	496 (925)
b. Cold	°C (°F)	252 (486)	274 (525)
2. Quantity (Total)			
a. Water	kg (ton)	703,480 (775.5)	
b. Draw Salt	kg (ton)		0.56×10^6 (621)

ENERGY RELATED EQUIPMENT

1. Storage Capacity	$MW_t h$	171			
53					
2. Storage Tanks		Underground Cavern	Condensate Storage Tank	Hot Tank	Cold Tank
a. Quantity		One (1)	One (1)	One (1)	One (1)
b. Size, each (Dia.xHt.)	m(ft)	12.8(42)x9.1(30)	9.8(32)x5.5(18)	9.1 (30)x5.5(18)	9.1 (30)x5.5(18)
c. Material		Excav. Rock,	Carbon Steel	30,455	Carbon Steel
d. Weight, each	kg (ton)	Steel-Lined	25,401 (28)	23,587 (26)	23,587 (26)
3. Tank Insulation					
a. Type					
b. Thickness	m (ft)	None	None	Mineral Fiber w/Al. Lag.	
4. Tank Foundation					
a. Type		None	Not Included	Concrete Mat	Concrete Mat
b. Thickness	m (ft)			1.22(4)Insul +1.22(4)Struct	0.61(2)Insul +1.22(4)Struct
c. Quantity, Total	$m^3(yd^3)$			161 (210)	122 (160)

		Charging	Discharging	Charging	Discharging
POWER RELATED EQUIPMENT					
1. Steam					
a. Flow, Total	kg/s (lb/hr)	16.4(129,940)	86.65(687,700)	19(151,000)	86.65(687,700)
b. Pressure	MPa (psia)	12.5 (1,815)	3.2 (468)	12.5 (1,815)	3.1 (443)
c. Temperature	°C (°F)	338 (640)	238 (460)	510 (950)	482 (900)
2. Storage Fluid				Draw Salt	Draw Salt
a. Flow, Total	kg/s (lb/hr)	16.4(129,940)	86.65(687,700)	29 (0.23×10^6)	155 (1.23×10^6)
b. Pressure (Tank)	MPa (psia)	11.9 (1,725)	4.1 (600)	Atmospheric	Atmospheric
c. Temperature (Pump)	°C (°F)	324 (615)	254 (486)	274 (525)	496 (925)
3. Pumps					
a. Quantity		1-100%	None	2-50%	2-50%
b. Type		Barrel Type		Vert. Cantilever	Vert. Cantilever
c. Material		Carbon Steel		Carbon Steel	316 SS
d. Fluid		Condensate		Draw Salt	Draw Salt
e. Capacity, each	m^3/s (gpm)	0.017 (270)		0.008 (122)	0.045 (710)
f. Head	m (ft)	1,716 (5,630)		41.1 (135)	46.3 (152)
g. Power (Shaft), each	kWe (hp)	423 (567)		7.8 (10.5)	47 (63)
h. Motor size	kWe (hp)	448 (600)		14.9 (20)	56 (75)
4. Heat Exchangers					
a. Quantity		None	None	1-50%	2-50%
b. Type				Shell & Tube	Shell & Tube
c. Material				304 SS	304 SS
d. Surface Area, Total	$m^2(ft^2)$			347 (3,730)	2614 (28,140)
e. Duty, Total	MW_t			10	53
ANNUAL ENERGY					
1. Electrical Energy	10^6kWeh	0.9041	0	0.0325	0.0380
2. Electrical Energy(Per Stg)	10^6kWeh	0.9041		0.0715	
3. Heat Loss (Per Stg)	10^9J(10^9BTU)	900 (0.853)		1,705 (1.616)	

TABLE 3-18. THERMAL STORAGE DESIGN DATA
WATER/STEAM RECEIVER - POWER
UNDERGROUND PRESSURIZED WATER - DRAW SALT (2 TANK)

HOURS OF STORAGE: Six (6)

		1st STAGE		2nd STAGE	
		Underground Pressurized Water		Draw Salt (2 Tank)	
STORAGE MEDIA					
1. Operating Temperature					
a. Hot	°C (°F)	324 (615)		496 (925)	
b. Cold	°C (°F)	252 (486)		274 (525)	
2. Quantity, Total					
a. Water	kg (ton)	4.22×10^6 (4,650)			
b. Draw Salt	kg (ton)			2.4×10^6 (2,726)	
ENERGY RELATED EQUIPMENT					
1. Storage Capacity	$MW_t h$	1,026		318	
2. Storage Tanks		Underground Condensate Cavern	Storage Tank	Hot Tank	Cold Tank
a. Quantity		One (1)	One (1)	One (1)	One (1)
b. Size, each (Dia. x Ht.)	m(ft)	31.4(103)x9.1(30)	18.3(60)x8.5(28)	16.8(55)x9.1(30)	16.8(55)x9.1(30)
c. Material		Excav. Rock	Carbon Steel	304 SS	Carbon Steel
d. Weight, each	kg (ton)	Steel Lined	75,297 (83)	89,359 (98.5)	90,720 (100)
3. Tank Insulation					
a. Type		None	None	Mineral Fiber w/Al. Lag.	
b. Thickness	m (ft)			0.25 (0.83)	0.13 (0.417)
4. Tank Foundation					
a. Type		None	Not Included	Concrete Mat	Concrete Mat
b. Thickness	m (ft)			1.22(4)Insul. +1.52(5)Struct.	0.61(2)Insul. +1.52(5)Struct.
c. Quantity, Total	$m^3(yd^3)$			608 (795)	474 (620)
		Charging	Discharging	Charging	Discharging
POWER RELATED EQUIPMENT					
1. Steam					
a. Flow, Total	kg/s (lb/hr)	98.4(781,100)	86.65(687,700)	114 (905,500)	86.65 (687,700)
b. Pressure	MPa (psia)	12.5 (1,815)	3.2 (468)	12.5 (1,815)	3.1 (443)
c. Temperature	°C (°F)	338 (640)	238 (460)	510 (950)	482 (900)
2. Storage Fluid				Draw Salt	Draw Salt
a. Flow, Total	kg/s (lb/hr)	98.4(781,100)	86.65(687,700)	174 (1.38×10^6)	155 (1.23×10^6)
b. Pressure (Tank)	MPa (psia)	11.9 (1725)	4.1 (600)	Atmospheric	Atmospheric
c. Temperature (Pump)	°C (°F)	324 (615)	252 (486)	274 (525)	496 (925)
3. Pumps					
a. Quantity		2 - 50%	None	2 - 50%	2 - 50%
b. Type		Barrel Type		Vert. Cantilever	Vert. Cantilever
c. Material		Carbon Steel		Carbon Steel	316 S.S.
d. Fluid		Condensate		Draw Salt	Draw Salt
e. Capacity, each	m^3/s (gpm)	0.05 (800)		0.046 (720)	0.045 (710)
f. Head	m (ft)	1,798 (5,900)		46.3 (152)	46.3 (152)
g. Power, each	kWe (hp)	1,206 (1,617)		53 (71)	47 (63)
h. Motor size	kWe (hp)	1,206 (1750)		75 (100)	56 (75)
4. Heat Exchangers					
a. Quantity		None	None	2 - 50%	2 - 50%
b. Type				Shell & Tube	Shell & Tube
c. Material				304 S.S.	304 S.S.
d. Surface Area, Total	$m^2(ft^2)$			1,819 (19,580)	2,614 (28,140)
e. Duty, Total	MW_t			60	53
ANNUAL ENERGY					
1. Electrical Energy	10^6kWeh	5.16	0	0.225	0.228
2. Electrical Energy (Total/Stg)	10^6kWeh	5.16		0.453	
3. Heat Loss	10^9J(BTU)	2,690 (2.55)		5,191 (4.92)	

Table 3-19. THERMAL STORAGE DESIGN DATA
WATER/STEAM RECEIVER - POWER
UNDERGROUND PRESSURIZED WATER - DRAW SALT (2 TANK)

HOURS OF STORAGE: Fifteen (15)

		1st STAGE		2nd STAGE	
		Underground Pressurized Water		Draw Salt (2 Tank)	
STORAGE MEDIA					
1. Operating Temperature					
a. Hot	°C (°F)	324 (615)		496 (925)	
b. Cold	°C (°F)	252 (486)		274 (525)	
2. Quantity, Total					
a. Water	kg (ton)	10.55×10^6 (11,630)			
b. Draw Salt	kg (ton)			8.5×10^6 (9,324)	
ENERGY RELATED EQUIPMENT					
1. Storage Capacity	MW_th	2565		795	
2. Storage Tanks		Underground Cavern	Condensate Storage Tank	Hot Tank	Cold Tank
a. Quantity		One (1)	Two (2)	Two (2)	Two (2)
b. Size, each (Dia.xHt.)	m(ft) 45.7	(150)x10.7(25)	18.3 (60)x9.1(30)	18.9(62)x9.1(30)	18.9(62)x9.1(30)
c. Material		Excav. Rock,	Carbon Steel	304 SS	Carbon Steel
d. Weight, each	kg (ton)	Steel Lined	82,555 (91)	0.11×10^6 (117)	0.12×10^6(134.5)
3. Tank Insulation					
a. Type		None	None	Mineral Fiber w/Al Lag.	
b. Thickness	m (ft)			0.253 (0.833)	0.13 (0.417)
4. Tank Foundation					
a. Type		None	Not Included	Concrete Mat	Concrete Mat
b. Thickness	m (ft)			1.22(4) Insul. +1.52(5) Struct.	0.61(2) Insul. +1.52(5) Struct.
c. Quantity, Total	$m^3(yd^3)$			1,539 (2,012)	1,197 (1,566)

		Charging	Discharging	Charging	Discharging
POWER RELATED EQUIPMENT					
1. Steam					
a. Flow, Total	kg/s (lb/hr)	195.4(1.55×10^6)	86.65(687,700)	213(1.69×10^6)	86.65(687,700)
b. Pressure	MPa (psia)	12.5 (1,815)	3.2 (468)	12.5 (1,815)	3.1 (443)
c. Temperature	°C (°F)	338 (640)	238 (460)	510 (950)	482 (900)
2. Storage Fluid				Draw Salt	Draw Salt
a. Flow, Total	kg/s (lb/hr)	195.4(1.55×10^6)	86.65(687,700)	324 (2.57×10^6)	155(1.23×10^6)
b. Pressure (Tank)	MPa (psia)	11.9 (1,725)	4.1 (600)	Atmospheric	Atmospheric
c. Temperature (Pump)	°C (°F)	324 (615)	252 (486)	274 (525)	496 (925)
3. Pumps					
a. Quantity		2-50%	None	2-50%	2-50%
b. Type		Barrel Type		Vert. Cantilever	Vert. Cantilever
c. Material		Carbon Steel		Carbon Steel	316 SS
d. Fluid		Condensate		Draw Salt	Draw Salt
e. Capacity, each	m^3/s (gpm)	0.096 (1,520)		0.086 (1,361)	0.045 (710)
f. Head	m (ft)	1,823 (5,980)		46.3 (152)	46.3 (152)
g. Power (Shaft), each	kWe (hp)	2,193 (2,940)		99 (132)	47 (63)
h. Motor size	kWe (hp)	264 (3,500)		149 (200)	56 (75)
4. Heat Exchangers					
a. Quantity		None	None	4-25%	2-50%
b. Type				Shell & Tube	Shell & Tube
c. Material				304 SS	304 SS
d. Surface Area, Total	$m^2(ft^2)$			3,286 (36,450)	2,614 (28,140)
e. Duty, Total	MW_t			111.8	53
ANNUAL ENERGY					
1. Electrical Energy	10^6kWeh	12.58	0	0.565	0.5705
2. Electrical Energy(Per Stg)	10^6kWeh	12.58		1.136	
3. Heat Loss (Per Stg)	10^9J(10^9BTU)	5,075(4.81)		12,270 (11.63)	

Table 3-20. THERMAL STORAGE DESIGN DATA
WATER/STEAM RECEIVER - POWER
ABOVE GROUND PRESSURIZED WATER - DRAW SALT (2 TANK)

HOURS OF STORAGE: One (1)

		1st STAGE	2nd STAGE
		Above Ground Press. Water	Draw Salt (2 Tank)
STORAGE MEDIA			
1. Operating Temperature			
a. Hot	°C (°F)	324 (615)	496 (925)
b. Cold	°C (°F)	252 (486)	274 (525)
2. Quantity (Total)			
a. Water	kg (ton)	703,400 (775.5)	
b. Draw Salt	kg (ton)		0.56×10^6 (621)
ENERGY RELATED EQUIPMENT			
1. Storage Capacity	MW_th	171	53

		Pressurized Tanks	Condensate Storage Tanks	Hot Tank	Cold Tank
2. Storage Tanks					
a. Quantity		Ten (10)	One (1)	One (1)	One (1)
b. Size, each (Dia.xHt.)	m(ft)	1.83 (6) x 44.8 (147)	9.8 (32)x5.5(18)	9.1 (30)x5.5(18)	
c. Material		A516-70 C.S.	Carbon Steel	304 SS	Carbon Steel
d. Weight, each	kg (ton)	226,800 (250)	25,401 (28)	23,587 (26)	23,587 (26)
3. Tank Insulation					
a. Type		Cal-Sil. w/Al. Lag.	None	Mineral Fiber w/Al. Lag.	
b. Thickness	m (ft)	0.25 (0.833)		0.253 (0.833)	0.13 (0.417)
4. Tank Foundation					
a. Type		Reif. Concrete Mat	Not Included	Concrete Mat	Concrete Mat
b. Thickness	m (ft)	1.22 (4)		1.22 (4) Insul. +1.22(4)Struct.	0.61(2)Insul +1.22 (4) Struct.
c. Quantity, Total	$m^3(yd^3)$	726 (950)		161 (210)	122 (160)

		Charging	Discharging	Charging	Discharging
POWER RELATED EQUIPMENT					
1. Steam					
a. Flow, Total	kg/s (lb/hr)	16.4(129,940)	86.65(687,700)	19(151,000)	86.65(687,700)
b. Pressure	MPa (psia)	12.5 (1,815)	3.2 (468)	12.5 (1,815)	3.1 (443)
c. Temperature	°C (°F)	338 (640)	238 (460)	510 (950)	482 (900)
2. Storage Fluid		Water	Water	Draw Salt	Draw Salt
a. Flow, Total	kg/s (lb/hr)	16.4 (129,940)	86.65 (687,700)	29 (0.23×10^6)	155 (1.23×10^6)
b. Pressure (Tank)	MPa (psia)	11.9 (1,725)	4.1 (600)	Atmospheric	Atmospheric
c. Temperature	°C (°F)	324 (615)	252 (486)	274 (525)	496 (925)
3. Pumps					
a. Quantity		1-100%	None	2-50%	2-50%
b. Type		Barrel Type		Vert. Cantilever	Vert. Cantilever
c. Material		Carbon Steel		Carbon Steel	316 SS
d. Fluid		Condensate		Draw Salt	Draw Salt
e. Capacity, each	m^3/s (gpm)	0.017 (270)		0.008 (122)	0.045 (710)
f. Head	m (ft)	1,716 (5,630)		41.1 (135)	46.3 (152)
g. Power (Shaft), each	kWe (hp)	423 (567)		7.8 (10.5)	47 (63)
h. Motor size	kWe (hp)	448 (600)		14.9 (20)	56 (75)
4. Heat Exchangers					
a. Quantity		None	None	1-50%	2-50%
b. Type				Shell & Tube	Shell & Tube
c. Material				304 SS	304 SS
d. Surface Area, Total	$m^2(ft^2)$			347 (3,730)	2614 (28,140)
e. Duty, Total	MW_t			10	53
ANNUAL ENERGY					
1. Electrical Energy	10^6kWeh	0.9041	0	0.0235	0.0380
2. Electrical Energy(Per Stg)	10^6kWeh	0.9041		0.0715	
3. Heat Loss (Per Stg)	10^9J(10^9BTU)	900 (0.853)		1,705 (1.616)	

Table 3-21. THERMAL STORAGE DESIGN DATA
WATER/STEAM RECEIVER - POWER
ABOVE GROUND PRESSURIZED WATER - DRAW SALT (2 TANK)

HOURS OF STORAGE: Six (6)

		1st STAGE		2nd STAGE	
		Above Ground Press. Water		Draw Salt (2 Tank)	
STORAGE MEDIA					
1. Operating Temperature					
a. Hot	°C (°F)	324 (615)		496 (925)	
b. Cold	°C (°F)	252 (486)		274 (525)	
2. Quantity, Total					
a. Water	kg (ton)	4.22×10^6 (4,650)			
b. Draw Salt	kg (ton)			3.4×10^6 (3,726)	
ENERGY RELATED EQUIPMENT					
1. Storage Capacity	$MW_t h$	1,026		318	
2. Storage Tanks		Pressurized Tanks	Condensate Storage Tanks	Hot Tank	Cold Tank
a. Quantity		Sixty (60)	One (1)	One (1)	One (1)
b. Size, each (Dia. x Ht.)	m(ft)	1.83(6)x44.8(147)	18.3(60)x8.5(28)	16.8(55)x9.1(30)	16.8(55)x9.1(30)
c. Material		A516-70 C.S.	Carbon Steel	304 SS	Carbon Steel
d. Weight, each	kg (ton)	226,800(250)	75,297 (83)	89,359 (98.5)	90,720 (100)
3. Tank Insulation					
a. Type		Cal-Sil. w/Al. Lag.	None	Mineral Fiber w/Al. Lag.	
b. Thickness	m (ft)	0.25 (0.833)		0.25 (0.83)	0.13 (0.417)
4. Tank Foundation					
a. Type		Rein.Conc.Mat	Not Included	Concrete Mat	Concrete Mat
b. Thickness	m (ft)	1.22 (4)		1.22(4)Insul. +1.52(5)Struc.	0.61(2)Insul. +1.52(5)Struc.
c. Quantity,Total	$m^3(yd^3)$	4,356 (5,700)		608 (795)	474 (620)
		Charging	Discharging	Charging	Discharging
POWER RELATED EQUIPMENT					
1. Steam					
a. Flow, Total	kg/s (lb/hr)	98.4 (781,100)	86.65(687,700)	114 (905,500)	86.65 (687,700)
b. Pressure	MPa (psia)	12.5 (1,815)	3.2 (468)	12.5 (1,815)	3.1 (443)
c. Temperature	°C (°F)	338 (640)	238 (460)	510 (950)	482 (900)
2. Storage Fluid		Water	Water	Draw Salt	Draw Salt
a. Flow, Total	kg/s (lb/hr)	98.4(781,100)	86.65(687,700)	174 (1.38×10^6)	155 (1.23×10^6)
b. Pressure (Tank)	MPa (psia)	11.9 (1,725)	4.1 (600)	Atmospheric	Atmospheric
c. Temperature (Pump)	°C (°F)	324 (615)	252 (486)	274 (525)	496 (925)
3. Pumps					
a. Quantity		2 - 50%	None	2 - 50%	2 - 50%
b. Type		Barrel Type		Vert. Cantilever	Vert. Cantilever
c. Material		Carbon Steel		Carbon Steel	316 S.S.
d. Fluid		Condensate		Draw Salt	Draw Salt
e. Capacity, each	m^3/s (gpm)	0.05 (800)		0.046 (730)	0.045 (710)
f. Head	m (ft)	1,798 (5,900)		46.3 (152)	46.3 (152)
g. Power, each	kWe (hp)	1,206 (1,617)		53 (71)	47 (63)
h. Motor size	kWe (hp)	1,306 (1,750)		75 (100)	56 (75)
4. Heat Exchangers					
a. Quantity		None	None	2 - 50%	2 - 50%
b. Type				Shell & Tube	Shell & Tube
c. Material				304 S.S.	304 S.S.
d. Surface Area, Total	$m^2(ft^2)$			2,079 (22,378)	2,614 (28,140)
e. Duty, Total	MW_t			60	53
ANNUAL ENERGY					
1. Electrical Energy	10^6kWeh	5.16	0	0.225	0.228
2. Electrical Energy (Total/Stg)	10^6kWeh	5.16		0.453	
3. Heat Loss	10^9J(BTU)	2,690 (2.55)		5,191 (4.92)	

3.4.7 Underground Oil/Rock, Solution Mined - Draw Salt (2 Tank)

3.4.7.1 System Description

Thermal storage in underground solution - mined caverns has been investigated and reported by R. E. Collins [14]. Collins' studies were concerned with gravel and heat transfer oil dual-media thermoclines, thus are applicable to this study. The underground solution - mined dual-media storage concept for this study is shown in Figure 3-11.

Except for the containment method, this concept is identical to the reference Caloria/granite sensible heat thermocline storage case.

To utilize solution mining, the cavern must be located in natural salt domes. The cavern is formed by the injection of fresh water into the salt and removal of the resultant brine. The pipes or wells used for carrying the water and brine during the constuction of cavern are used for transporting the heat transfer fluid to and from storage. The required charging and discharging heat exchangers in addition to the charging and discharging pumps are located at grade elevation.

3.4.7.2 Thermal Storage Design Data

The design data for the underground solution-mined, oil/rock storage concept with a draw salt (2 tank) 2nd stage is shown in Tables 3-22, 3-23, and 3-24 for 1, 6 and 15 hours storage, respectively.

3.4.7.3 Discussion

Based on cavern excavation costs alone ($1.50/bbl used in study) a very low cost containment can be provided by solution mining. However, the major cost item is the Caloria wells. Based on well cost provided by Collins [15], the cost of the required number of wells represents about 90% of the total cost, including cavern excavation, Caloria wells and brine disposal. Also brine disposal cost could exceed the cavern excavation cost. Comparing the solution-mined oil/rock storage concept against the reference above ground oil/rock concept, it appears that solution mining is not competetive for storage capacities below approximately 15 hours. In addition to high cost, the solution mining concepts are very site dependent. Collins has identified areas of the continental United States having salt deposits suitable for construction of solution-mined caverns for thermal energy storage. Major salt deposits in areas of high insolation appear to be in the Permian Basin of Texas, New Mexico and Kansas, and the Gulf Interior Basin of Texas and Louisiana.

The thermal losses from underground salt caverns is estimated by Collins to be less than 1% of the heat input per cycle after equilibrium is reached. For the purpose of this study it was assumed that the percent heat loss per day would range from 0.7% to 0.2% for 1 to 15 hour storage respectively. This corresponds to a heat flux of approximately 31.5 W/m^2 (10 BTU/hr. ft^2) to 25.2 W/m^2 (8 BTU/hr. $ft.^2$) for steady state operation.

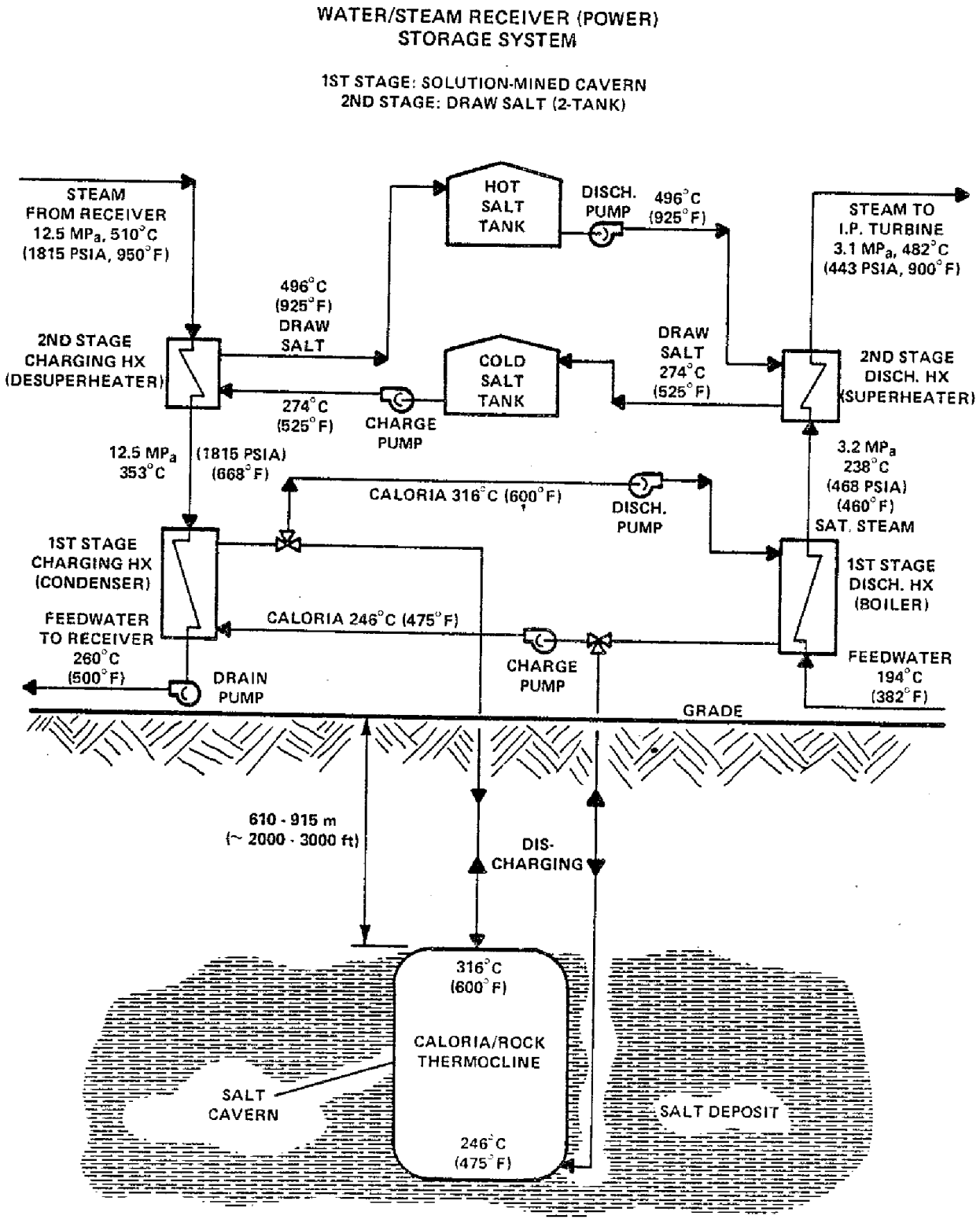

Figure 3–11. THERMAL STORAGE SYSTEM
CALORIA/ROCK, SOLUTION-MINED CAVERN - DRAW SALT (2-TANK)

Table 3-22. THERMAL STORAGE DESIGN DATA
WATER/STEAM RECEIVER - POWER
UNDERGROUND SOLUTION-MINED CAVERN - DRAW SALT (2-TANK)

HOURS OF STORAGE: One (1)

		1st STAGE			2nd STAGE	
		Underground Solution-Mined Cavern			Draw Salt (2 Tank)	
STORAGE MEDIA						
1. Operating Temperature						
a. Hot	°C (°F)	316 (600)			496 (925)	
b. Cold	°C (°F)	246 (475)			274 (525)	
2. Quantity (Total)						
a. Oil, Caloria	kg (ton)	1.49×10^6 (1,646)				
b. Granite	kg (ton)	7.28×10^6 (8,026)				
c. Draw Salt	kg (ton)				0.56×10^6 (621)	
ENERGY RELATED EQUIPMENT						
1. Storage Capacity	$MW_t h$	171			53	
2. Storage Tanks		Underground Salt Cavern		Hot Tank		Cold Tank
a. Quantity		One (1)		One (1)		One (1)
b. Size, each (Dia.xHt.)	m(ft)	17.3 (56.7)x17.3(56.7)		9.1 (30)x5.5(18)		9.1 (30)x5.5(18)
c. Material		Natural Salt Dome		304 SS		Carbon Steel
d. Weight, each	kg (ton)			23,587 (26)		23,587 (26)
3. Tank Insulation						
a. Type		None		Mineral Fiber w/Al. Lag.		
b. Thickness	m (ft)			0.253 (0.833)		0.13 (0.417)
4. Tank Foundation						
a. Type		None		Concrete Mat		Concrete Mat
b. Thickness	m (ft)			1.22 (4) Insul. +1.22(4)Struct.		0.61(2)Insul. +1.22(4)Struct.
c. Quantity, Total	$m^3(yd^3)$			161 (210)		122 (160)
POWER RELATED EQUIPMENT		Charging	Discharging		Charging	Discharging
1. Steam						
a. Flow, Total	kg/s (lb/hr)	19(151,000)	86.65(687,700)		19(151,000)	86.65(687,700)
b. Pressure	MPa (psia)	12.5 (1,815)	3.2 (468)		12.5 (1,815)	3.1 (443)
c. Temperature	°C (°F)	353 (668)	238 (460)		510 (950)	482 (900)
2. Storage Fluid		Caloria	Caloria		Draw Salt	Draw Salt
a. Flow, Total	kg/s (lb/hr)	166 (1.32×10^6)	878 (6.97×10^6)		29 (0.23×10^6)	155 (1.23×10^6)
b. Pressure (Tank)	MPa (psia)	5.8 (840)	6.3 (910		Atmospheric	Atmospheric
c. Temperature (Pump)	°C (°F)	246 (475)	316 (600)		274 (525)	496 (925)
3. Pumps						
a. Quantity		2-50%	4-25%		2-50%	2-50%
b. Type		Horiz. Centrif.	Horiz. Centrif.		Vert. Cantilever	Vert. Cantilever
c. Material		Carbon Steel	Carbon Steel		Carbon Steel	316 SS
d. Fluid		Caloria	Caloria		Draw Salt	Draw Salt
e. Capacity, each	m^3/s (gpm)	0.12 (1,966)	0.32 (5,000)		0.008 (122)	0.045 (710)
f. Head	m (ft)	61 (200)	61 (200)		41.1 (135)	46.3 (152)
g. Power (Shaft), each	kWe (hp)	66 (89)	175 (235)		7.8 (10.5)	47 (63)
h. Motor size	kWe (hp)	75 (100)	187 (250)		14.9 (20)	56 (75)
4. Heat Exchangers						
a. Quantity		1-100%	2-50%		1-50%	2-50%
b. Type		Shell & Tube	Drum Type		Shell & Tube	Shell & Tube
c. Material		Carbon Steel	Carbon Steel		304 SS	304 SS
d. Surface Area, Total	$m^2(ft^2)$	867 (9,333)	6,224 (67,000)		303 (3,263)	2,61[illegible] (28,140)
e. Duty, Total	MW_t	32.5	171		10	33
ANNUAL ENERGY						
1. Electrical Energy	10^6kWeh	0.579[a]	0.285		0.0325	0.0380
2. Electrical Energy(Per Stg)	10^6kWeh	0.864[a]			0.715	
3. Heat Loss (Per Stg)	10^9J(10^9BTU)	1,582 (1.5)			1,705 (1.616)	

Notes:
[a]Annual Electrical Energy (Charging) Includes Charging Heater Drain Pump Power (1st Stage). See Appendix D for Charging Heater Drain Pump Design Data.

Table 3-23. THERMAL STORAGE DESIGN DATA
WATER/STEAM RECEIVER - POWER
UNDERGROUND SOLUTION-MINED CAVERN - DRAW SALT (2 TANK)

HOURS OF STORAGE: Six (6)

		1st STAGE	2nd STAGE
		Underground Solution-Mined Cavern	Draw Salt (2 Tank)
STORAGE MEDIA			
1. Operating Temperature			
a. Hot	°C (°F)	316 (600)	496 (925)
b. Cold	°C (°F)	246 (475)	274 (525)
2. Quantity, Total			
a. Oil, Caloria	kg (ton)	5.9×10^6 (6,499)	
b. Granite	kg (ton)	43.7×10^6 (48,158)	
c. Draw Salt	kg (ton)		3.4×10^6 (3,726)

ENERGY RELATED EQUIPMENT					
1. Storage Capacity	$MW_t h$	1,026		218	
2. Storage Tanks		Underground Salt Cavern		Hot Tank	Cold Tank
a. Quantity		One (1)		One (1)	One (1)
b. Size, each (Dia. x Ht.)	m(ft)	31.4(103)x31.4(103)		16.8(55)x9.1(30)	16.8(55)x9.1(30)
c. Material		Natural Salt Dome		304 SS	Carbon Steel
d. Weight, each	kg (ton)			89,359 (98.5)	90,720 (100)
3. Tank Insulation					
a. Type		None		Mineral Fiber w/Al. Lag.	
b. Thickness	m (ft)			0.25 (0.83)	0.13 (0.417)
4. Tank Foundation					
a. Type		None		Concrete Mat	Concrete Mat
b. Thickness	m (ft)			1.22(4)Insul. +1.52(5)Struc.	0.61(2)Insul. +1.52(5)Struc.
c. Quantity, Total	$m^3(yd^3)$			608 (795)	474 (620)
		Charging	Discharging	Charging	Discharging
POWER RELATED EQUIPMENT					
1. Steam					
a. Flow, Total	kg/s (lb/hr)	114 (905,500)	86.65(687,700)	114 (905,500)	86.65 (687,700)
b. Pressure	MPa (psia)	12.5 (1,815)	3.2 (468)	12.5 (1,815)	3.1 (443)
c. Temperature	°C (°F)	353 (668)	238 (460)	510 (950)	482 (900)
2. Storage Fluid		Caloria	Caloria	Draw Salt	Draw Salt
a. Flow, Total	kg/s (lb/hr)	1000(7.94×10^6)	878(6.97×10^6)	174 (1.38×10^6)	155 (1.23×10^6)
b. Pressure (Cavern)	MPa (psia)	5.8 (840)	6.3 (910)	Atmospheric	Atmospheric
c. Temperature (Pump)	°C (°F)	246 (475)	316 (600)	274 (525)	496 (925)
3. Pumps					
a. Quantity		5 - 20%	4 - 25%	2 - 50%	2 - 50%
b. Type		Horiz. Centrif.	Horiz. Centrif.	Vert. Cantilever	Vert. Cantilever
c. Material		Carbon Steel	Carbon Steel	Carbon Steel	316 S.S.
d. Fluid		Caloria	Caloria	Draw Salt	Draw Salt
e. Capacity, each	m^3/s (gpm)	0.32 (5,000)	0.32 (5,000)	0.046 (720)	0.045 (710)
f. Head	m (ft)	61 (200)	61 (200)	46.3 (152)	46.3 (152)
g. Power, each	kWe (hp)	160 (214)	175 (235)	53 (71)	47 (63)
h. Motor size	kWe (hp)	187 (250)	187 (250)	75 (100)	56 (75)
4. Heat Exchangers					
a. Quantity		2 - 50%	2 - 50%	2 - 50%	2 - 50%
b. Type		Shell & Tube	Drum Type	Shell & Tube	Shell & Tube
c. Material		Carbon Steel	Carbon Steel	304 S.S.	304 S.S.
d. Surface Area, Total	$m^2(ft^2)$	5,202 (56,000)	6,224 (67,000)	1,819 (19,580)	2,614 (28,140)
e. Duty, Total	MW_t	195	171	60	53
ANNUAL ENERGY					
1. Electrical Energy	10^6kWeh	3.634[a]	1.708	0.225	0.228
2. Electrical Energy (Total/Stg)	10^6kWeh	5.342[a]		0.453	
3. Heat Loss	10^9J(BTU)	4,051 (3.84)		5,191 (4.92)	

Notes:
[a]Annual Electrical Energy (Charging) Includes Charging Heater Drain Pump Power (1st Stage). See Appendix D for Charging Heater Drain Pump Design Data.

Table 3-24. THERMAL STORAGE DESIGN DATA
WATER/STEAM RECEIVER - POWER
UNDERGROUND SOLUTION-MINED CAVERN - DRAW SALT (2 TANK)

HOURS OF STORAGE: Fifteen (15)

		1st STAGE	2nd STAGE
		Underground Solution Mined Cavern	Draw Salt (2 Tank)
STORAGE MEDIA			
1. Operating Temperature			
a. Hot	°C (°F)	316 (600)	496 (925)
b. Cold	°C (°F)	246 (475)	274 (525)
2. Quantity, Total			
a. Oil, Caloria	kg (ton)	14.08×10^6 (15,525)	
b. Granite	kg (ton)	109.2×10^6 (120,391)	
c. Draw Salt	kg (ton)		8.5×10^6 (9,324)

ENERGY RELATED EQUIPMENT				
1. Storage Capacity	MW_th	2565	795	
2. Storage Tanks		Underground Salt Cavern	Hot Tank	Cold Tank
a. Quantity		One (1)	Two (2)	Two (2)
b. Size, each (Dia.xHt.)	m(ft)	42.6(139.8)x42.6(139.8)	18.9(62)x9.1(30)	18.9(62)x9.1(30)
c. Material		Natural Salt Dome	304 SS	Carbon Steel
d. Weight, each	kg (ton)		0.11×10^6 (117)	0.12×10^6(134.5)
3. Tank Insulation				
a. Type		None	Mineral Fiber w/Al. Lag.	
b. Thickness	m (ft)		0.253 (0.833)	0.13 (0.417)
4. Tank Foundation				
a. Type		None	Concrete Mat	Concrete Mat
b. Thickness	m (ft)		1.22(4)Insul. +1.52(5) Struct.	0.61(2)Insul. +1.52(5) Struct.
c. Quantity, Total	$m^3(yd^3)$		1,539 (2,012)	1,197 (1,566)

		Charging	Discharging	Charging	Discharging
POWER RELATED EQUIPMENT					
1. Steam					
a. Flow, Total	kg/s (lb/hr)	213(1.69×10^6)	86.65(687,700)	213(1.69×10^6)	86.65(687,700)
b. Pressure (Cavern)	MPa (psia)	12.5 (1,815)	3.2 (468)	12.5 (1,815)	3.1 (443)
c. Temperature	°C (°F)	353 (668)	228 (460)	510 (950)	482 (900)
2. Storage Fluid		Caloria	Caloria	Draw Salt	Draw Salt
a. Flow, Total	kg/s (lb/hr)	1,860(14.76×10^6)	878 (6.97×10^6)	324 (2.57×10^6)	155(1.23×10^6)
b. Pressure (Cavern)	MPa (psia)	5.8 (840)	6.3 (910)	Atmospheric	Atmospheric
c. Temperature (Pump)	°C (°F)	246 (475)	316 (600)	274 (525)	496 (925)
3. Pumps					
a. Quantity		9-11.1%	4-25%	2-50%	2-50%
b. Type		Horiz. Centrif.	Horiz. Centrif	Vert. Cantilever	Vert. Cantilever
c. Material		Carbon Steel	Carbon Steel	Carbon Steel	316 SS
d. Fluid		Caloria	Caloria	Draw Salt	Draw Salt
e. Capacity, each	m^3/s (gpm)	0.32 (5,000)	0.32 (5,000)	0.086 (1,361)	0.045 (710)
f. Head	m (ft)	61 (200)	61 (200)	46.3 (152)	46.3 (152)
g. Power (Shaft), each	kWe (hp)	166 (222)	175 (235)	99 (122)	47 (63)
h. Motor size	kWe (hp)	187 (250)	187 (250)	149 (200)	56 (75)
4. Heat Exchangers					
a. Quantity		4-25%	2-50%	4-25%	2-50%
b. Type		Shell & Tube	Drum Type	Shell & Tube	Shell & Tube
c. Material		Carbon Steel	Carbon Steel	304 SS	304 SS
d. Surface Area, Total	$m^2(ft^2)$	9,697 (104,380)	6,224 (67,000)	3,386 (36,450)	2,614 (28,140)
e. Duty, Total	MW_t	263.4	171	111.8	53
ANNUAL ENERGY					
1. Electrical Energy	10^6kWeh	9.445[a]	4.271	0.563	0.5705
2. Electrical Energy(Per Stg)	10^6kWeh	13.716[a]		1.136	
3. Heat Loss (Per Stg)	10^9J(10^9BTU)	6,794 (6.44)		12,270 (11.63)	

Notes:
[a]Annual Electrical Energy (Charging) Includes Charging Heater Drain Pump Power (1st Stage). See Appendix D for Charging Heater Drain Pump Design Data.

3.4.8 Caloria (2 tank) - Draw Salt (2 tank)

3.4.8.1 System Description

A storage system utilizing a Caloria (2 tank) first stage and draw salt (2 tank) second stage is shown in Figure 3-12. The operating conditions are the same as for reference storage system, i.e. oil/rock thermocline first stage and draw salt (2 tank) second stage. The two tank storage concept separates the storage media into hot and cold tanks rather than combining the two in a single dual-media thermocline tank.

3.4.8.2 Thermal Storage Design Data

The design data for the Caloria (2 tank) - draw salt (2 tank) storage system is shown in Tables 3-25, 3-26, and 3-27 for 1, 6 and 15 hours, respectively.

3.4.8.3 Discussion

The Caloria (2 tank) storage concept offers the advantages of simplicity and no oil/rock contact which has been shown to be detrimental to fluid life. Also the operational uncertainties associated with dual-media thermoclines are avoided. The main disadvantages are more fluid inventory (higher fluid cost) and greater tank cost than dual-media storage systems.

The economic evaluation indicates that the Caloria (2 tank) - draw salt (2 tank) storage concept is a poor choice for storage capacities above about three hours.

3.4.9 Tube Intensive Heat Exchanger - Draw Salt (2 Tank)

3.4.9.1 System Description

This is an experiment in latent storage concepts with the tube intensive heat exchanger concept replacing the reference first stage Caloria/granite thermocline concept as shown in Figure 3-13. The 2nd stage draw salt (2 tank) system is essentially the same as the reference case except that the charging desuperheater heat exchanger heat transfer area is approximately 9% smaller due to the increased delta-T (lmtd) for the 2nd stage.

The tube intensive heat exchanger concept has been developed by Comstock & Wescott (C&W) [4] for use with a phase-change (i.e. latent) thermal storage system in contrast to the reference system which utilizes only the sensible heat capacity of the storage media. The tube intensive heat exchanger storage system, shown schematically in Figure 3-13, is somewhat similar to the reference Caloria/granite thermocline except that the heat transfer oil (i.e. Therminol 66) does not directly contact the storage media ("Thermkeep" salt). The energy is transmitted to the salt through a passive heat exchanger (i.e., tube intensive design) comprised of many coils of small tubing with the oil flowing inside the tubing. This passive design uses a large heat transfer area. Since the melting point of the

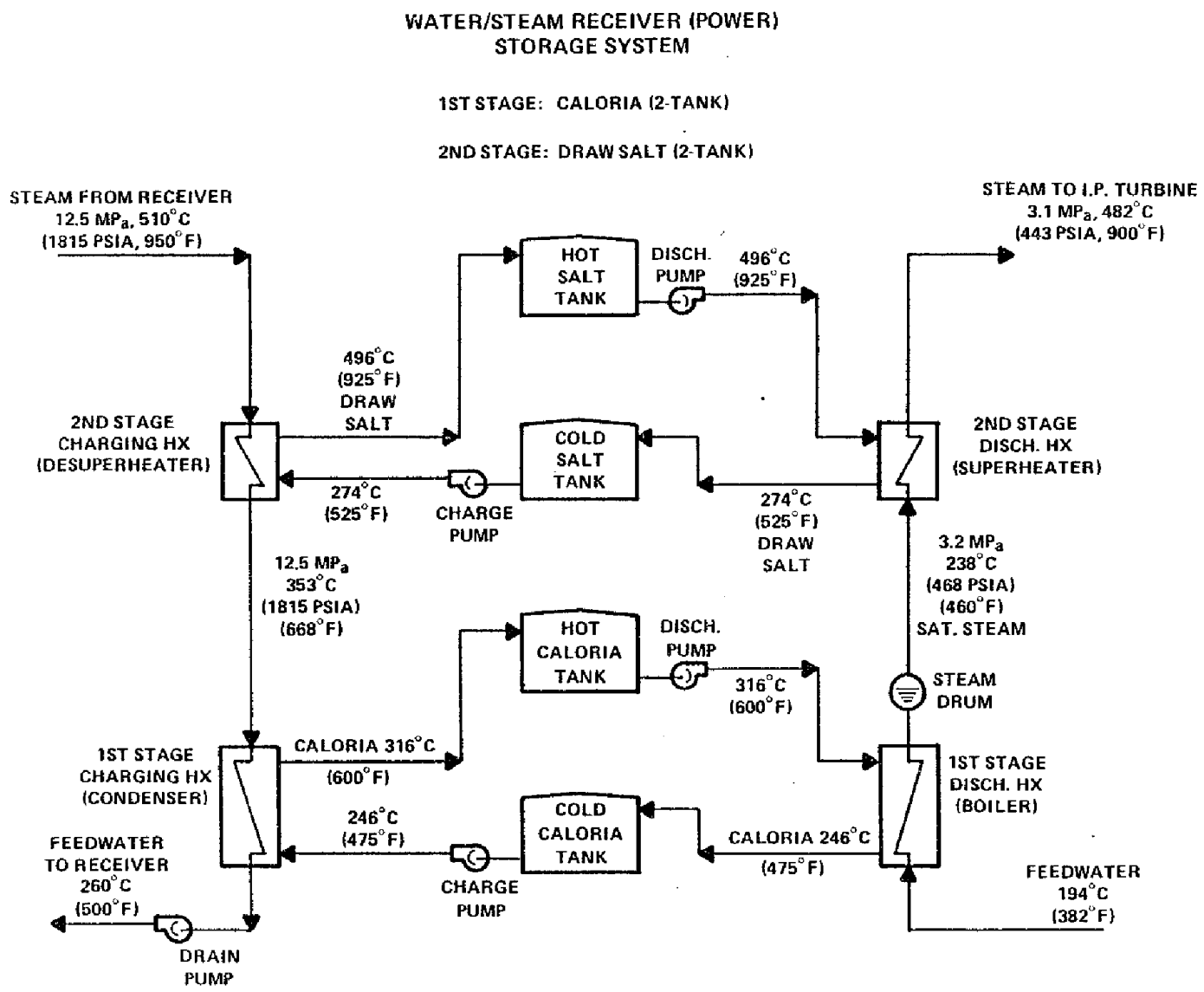

Figure 3–12. THERMAL STORAGE SYSTEM
CALORIA (2-TANK) - DRAW SALT (2-TANK)

Table 3-25. THERMAL STORAGE DESIGN DATA
WATER/STEAM RECEIVER - POWER
CALORIA (2 TANK)- DRAW SALT (2 TANK)

HOURS OF STORAGE: One (1)

		1st STAGE Caloria (2 Tank)		2nd STAGE Draw Salt (2 Tank)	
STORAGE MEDIA					
1. Operating Temperature					
a. Hot	°C (°F)	316 (600)		496 (925)	
b. Cold	°C (°F)	246 (475)		274 (525)	
2. Quantity (Total)					
a. Oil, Caloria	kg (ton)	3.24×10^6 (3,572)			
b. Draw Salt	kg (ton)			0.56×10^6 (621)	
ENERGY RELATED EQUIPMENT					
1. Storage Capacity	$MW_t h$	171		53	
2. Storage Tanks		Hot Tank	Cold Tank	Hot Tank	Cold Tank
a. Quantity		One (1)	One (1)	One (1)	One (1)
b. Size, each (Dia.xHt.)	m(ft)	23.2(75)x12.8(42)	23.2(76)x12.8(42)	9.1 (30)x5.5(18)	9.1 (30)x5.5(18)
c. Material		Carbon Steel		304 SS	Carbon Steel
d. Weight, each	kg (ton)	139,707 (154)	139,707(154)	23,587 (26)	23,587 (26)
3. Tank Insulation					
a. Type		Mineral Fiber w/Al. Lag.		Mineral Fiber w/Al. Lag.	
b. Thickness	m (ft)	0.28(0.917)	0.23(0.75)	0.253 (0.833)	0.13 (0.417)
4. Tank Foundation					
a. Type		Concrete Mat		Concrete Mat	
b. Thickness	m (ft)	0.61(2)Insul. +1.22(4)Struct.		1.22(4)Insul. +1.22(4)Struct.	0.61(2)Insul. +1.22(4)Struct.
c. Quantity, Total	$m^3(yd^3)$	772 (1,010)	772 (1,010)	161 (210)	122 (160)

		Charging	Discharging	Charging	Discharging
POWER RELATED EQUIPMENT					
1. Steam					
a. Flow, Total	kg/s (lb/hr)	19(151,000)	86.65(687,700)	19(151,000)	86.65(687,700)
b. Pressure	MPa (psia)	12.5 (1,815)	3.2 (468)	12.5 (1,815)	3.1 (443)
c. Temperature	°C (°F)	353 (668)	238 (460)	510 (950)	482 (900)
2. Storage Fluid		Caloria	Caloria	Draw Salt	Draw Salt
a. Flow, Total	kg/s (lb/hr)	166 (1.37×10^6)	878 (6.97×10^6)	29 (0.23×10^6)	155 (1.23×10^6)
b. Pressure (Tank)	MPa (psia)	Atmospheric	Atmospheric	Atmospheric	Atmospheric
c. Temperature (Pump)	°C (°F)	246 (475)	316 (600)	274 (525)	496 (925)
3. Pumps					
a. Quantity		2-50%	2-50%	2-50%	2-50%
b. Type		Horiz. Centrif.	Horiz. Centrif.	Vert. Cantilever	Vert. Cantilever
c. Material		Carbon Steel	Carbon Steel	Carbon Steel	316 SS
d. Fluid		Caloria	Caloria	Draw Salt	Draw Salt
e. Capacity, each	m^3/s (gpm)	0.12 (1890)	0.67 (10,710)	0.008 (122)	0.045 (710)
f. Head	m (ft)	30.5 (100)	41.1 (135)	41.1 (135)	46.3 (152)
g. Power (Shaft), each	kWe (hp)	34 (45)	236 (316)	7.8 (10.5)	47 (63)
h. Motor size	kWe (hp)	37 (50)	261 (350)	14.9 (20)	56 (75)
4. Heat Exchangers					
a. Quantity		1-100%	2-50%	1-50%	2-50%
b. Type		Shell & Tube	Drum Type	Shell & Tube	Shell & Tube
c. Material		Carbon Steel	Carbon Steel	304 SS	304 SS
d. Surface Area, Total	$m^2(ft^2)$	867 (9,333)	6,224 (67,000)	303 (3,263)	2,614 (28,130)
e. Duty, Total	MW_t	32.5	171	10	53
ANNUAL ENERGY					
1. Electrical Energy	10^6kWeh	0.4375[a]	0.191	0.0335	0.0380
2. Electrical Energy(Per Stg)	10^6kWeh	0.6285[a]		0.0715	
3. Heat Loss (Per Stg)	10^9J(10^9BTU)	5,020 (4.758)		1,705 (1.616)	

Notes:
[a]Annual Electrical Energy (Charging) Includes Charging Heater Drain Pump Power (1st Stage). See Appendix D for Charging Heater Drain Pump Design Data.

Table 3-26. THERMAL STORAGE DESIGN DATA
WATER/STEAM RECEIVER - POWER
CALORIA (2 TANK) - DRAW SALT (2 TANK)

HOURS OF STORAGE: Six (6)

		1st STAGE		2nd STAGE	
		Caloria (2 Tank)		Draw Salt (2 Tank)	
STORAGE MEDIA					
1. Operating Temperature					
a. Hot	°C (°F)	316 (600)		496 (925)	
b. Cold	°C (°F)	246 (475)		274 (525)	
2. Quantity, Total					
a. Oil, Caloria	kg (ton)	19.4×10^6 (21,420)			
b. Draw Salt	kg (ton)			3.4×10^6 (3,726)	
ENERGY RELATED EQUIPMENT					
1. Storage Capacity	$MW_t h$	1,026		318	
2. Storage Tanks		Hot Tank	Cold Tank	Hot Tank	Cold Tank
a. Quantity		Four (4)	Four (4)	One (1)	One (1)
b. Size, each (Dia. x Ht.)	m(ft)	28.7(94)x12.8(42)	28.7(94)x128(42)	16.8(55)x9.1(30)	16.8(55)x9.1(30)
c. Material		Carbon Steel		304 SS	Carbon Steel
d. Weight, each	kg (ton)	206,840(228)	206,840 (228)	89,359 (98.5)	90,720 (100)
3. Tank Insulation					
a. Type		Mineral Fiber w/Al. Lag.		Mineral Fiber w/Al. Lag.	
Lag.					
b. Thickness	m (ft)	0.23(0.75)	0.20(0.67)	0.25 (0.83)	0.13 (0.417)
4. Tank Foundation					
a. Type		Concrete Mat		Concrete Mat	
b. Thickness	m (ft)	0.61(2) Insul.+1.22(4)Struct		1.22(4)Insul. +1.52(5)Struc.	0.61(2)Insul. +1.52(5)Struc.
c. Quantity,Total	$m^3(yd^3)$	4,716(6,168)	4,716 (6,168)	608 (795)	474 (620)
POWER RELATED EQUIPMENT		Charging	Discharging	Charging	Discharging
1. Steam					
a. Flow, Total	kg/s (lb/hr)	114 (905,500)	86.65(687,700)	114 (905,500)	86.65 (687,700)
b. Pressure	MPa (psia)	12.5 (1,815)	3.2 (468)	12.5 (1,815)	3.1 (443)
c. Temperature	°C (°F)	353 (668)	238 (460)	510 (950)	482 (900)
2. Storage Fluid		Caloria	Caloria	Draw Salt	Draw Salt
a. Flow, Total	kg/s (lb/hr)	$1000(7.94 \times 10^6)$	$878(6.97 \times 10^6)$	$174\ (1.38 \times 10^6)$	$155\ (1.23 \times 10^6)$
b. Pressure (Tank)	MPa (psia)	Atmospheric	Atmospheric	Atmospheric	Atmospheric
c. Temperature (Pump)	°C (°F)	246 (475)	316 (600)	274 (525)	496 (925)
3. Pumps					
a. Quantity		2 - 50%	2 - 50%	2 - 50%	2 - 50%
b. Type		Horiz. Centrif	Horiz. Centrif	Vert. Cantilever	Vert. Cantilever
c. Material		Carbon Steel	Carbon Steel	Carbon Steel	316 S.S.
d. Fluid		Caloria	Caloria	Draw Salt	Draw Salt
e. Capacity, each	m^3/s (gpm)	0.72 (11,340)	0.67 (10,710)	0.046 (730)	0.045 (710)
f. Head	m (ft)	41.1 (135)	41.1 (135)	46.3 (152)	46.3 (152)
g. Power, each	kWe (hp)	269 (361)	236 (316)	53 (71)	47 (63)
h. Motor size	kWe (hp)	298 (400)	261 (350)	75 (100)	56 (75)
4. Heat Exchangers					
a. Quantity		2 - 50%	2 - 50%	2 - 50%	2 - 50%
b. Type		Shell & Tube	Drum Type	Shell & Tube	Shell & Tube
c. Material		Carbon Steel	Carbon Steel	304 S.S.	304 S.S.
d. Surface Area, Total	$m^2(ft^2)$	5,202 (56,000)	6,224 (67,000)	1,819 (19,580)	2,614 (28,140)
e. Duty, Total	MW_t	195	171	60	53
ANNUAL ENERGY					
1. Electrical Energy	10^6kWeh	3.08[a]	1.148	0.225	0.228
2. Electrical Energy (Total/Stg)	10^6kWeh	4.228[a]		0.453	
3. Heat Loss	10^9J(BTU)	30,822 (29.215)		5,191 (4.92)	

Notes:
[a]Annual Electrical Energy (Charging) Includes Charging Heater Drain Pump Power (1st Stage). See Appendix D for Charging Heater Drain Pump Design Data.

Table 3-27. THERMAL STORAGE DESIGN DATA
WATER/STEAM RECEIVER - POWER
CALORIA (2 TANK) - DRAW SALT (2 TANK)

HOURS OF STORAGE: Fifteen (15)

		1st STAGE		2nd STAGE	
		Caloria (2 Tank)		Draw Salt (2 Tank)	
STORAGE MEDIA					
1. Operating Temperature					
a. Hot	°C (°F)	316 (600)		496 (925)	
b. Cold	°C (°F)	246 (475)		274 (525)	
2. Quantity, Total					
a. Oil, Caloria	kg (ton)	48.6×10^6 (53,550)			
b. Draw Salt	kg (ton)			8.5×10^6 (9,224)	
ENERGY RELATED EQUIPMENT					
1. Storage Capacity	$MW_t h$	2565		795	
2. Storage Tanks		Hot Tank	Cold Tank	Hot Tank	Cold Tank
a. Quantity		Four (4)	Four (4)	Two (2)	Two (2)
b. Size, each (Dia.xHt.)	m(ft)	42.1(138)x14.6(48)	42.1(138)x14.6(48)	18.9(62)x9.1(30)	18.9(62)x9.1(30)
c. Material		Carbon Steel		304 SS	Carbon Steel
d. Weight, each	kg (ton)	473,560 (522)	473,560 (522)	0.11×10^6 (117)	0.12×10^6(134.5)
3. Tank Insulation					
a. Type		Mineral Fiber w/Al Lag.		Mineral Fiber w/Al. Lag.	
b. Thickness	m (ft)	0.18(0.58)	0.18 (0.58)	0.253 (0.833)	0.12 (0.417)
4. Tank Foundation					
a. Type		Concrete Mat		Concrete Mat	Concrete Mat
b. Thickness	m (ft)	0.61(2) Insul. + 1.22(4) Struct.		1.22(4)Insul. +1.52(5) Struct.	0.61(2)Insul. +1.52(5) Struct.
c. Quantity, Total	$m^3(yd^3)$	10,170 (13,300)	10,170 (13,300)	1,539 (2,012)	1,197 (1,566)
POWER RELATED EQUIPMENT		Charging	Discharging	Charging	Discharging
1. Steam					
a. Flow, Total	kg/s (lb/hr)	213 (1.69×10^6)	86.65(687,700)	213(1.69×10^6)	86.65(687,700)
b. Pressure	MPa (psia)	12.5 (1,815)	3.2 (468)	12.5 (1,815)	3.1 (443)
c. Temperature	°C (°F)	352 (668)	238 (460)	510 (950)	482 (900)
2. Storage Fluid		Caloria	Caloria	Draw Salt	Draw Salt
a. Flow, Total	kg/s (lb/hr)	1,860(14.76×10^6)	878 (6.97×10^6)	324 (2.57×10^6)	155(1.23×10^6)
b. Pressure (Tank)	MPa (psia)	Atmospheric	Atmospheric	Atmospheric	Atmospheric
c. Temperature (Pump)	°C (°F)	246 (475)	316 (600)	274 (525)	496 (925)
3. Pumps					
a. Quantity		4-25%	2-50%	2-50%	2-50%
b. Type		Horiz. Centrif.	Horiz. Centrif	Vert. Cantilever	Vert. Cantilever
c. Material		Carbon Steel	Carbon Steel	Carbon Steel	316 SS
d. Fluid		Caloria	Caloria	Draw Salt	Draw Salt
e. Capacity, each	m^3/s (gpm)	0.66 (10,540)	0.67 (10,710)	0.086 (1,361)	0.045 (710)
f. Head	m (ft)	41.1 (135)	41.1 (135)	46.3 (152)	46.3 (152)
g. Power (Shaft), each	kWe (hp)	250 (335)	236 (316)	99 (132)	47 (62)
h. Motor size	kWe (hp)	223 (400)	261 (350)	149 (200)	56 (75)
4. Heat Exchangers					
a. Quantity		4-25%	2-50%	4-25%	2-50%
b. Type		Shell & Tube	Drum Type	Shell & Tube	Shell & Tube
c. Material		Carbon Steel	Carbon Steel	304 SS	304 SS
d. Surface Area, Total	$m^2(ft^2)$	9,697 (104,380)	6,224 (67,000)	3,386 (36,450)	2,614 (28,140)
e. Duty, Total	MW_t	263.4	171	111.8	52
ANNUAL ENERGY					
1. Electrical Energy	10^6kWeh	8.04[a]	2.87	0.565	0.5705
2. Electrical Energy(Per Stg)	10^6kWeh	10.91[a]		1.136	
3. Heat Loss (Per Stg)	10^9J(10^9BTU)	71,445 (67.72)		12,270 (11.63)	

Notes:
[a]Annual Electrical Energy (Charging) Includes Charging Heater Drain Pump Power (1st Stage). See Appendix 3 for Charging Heater Drain Pump Design Data.

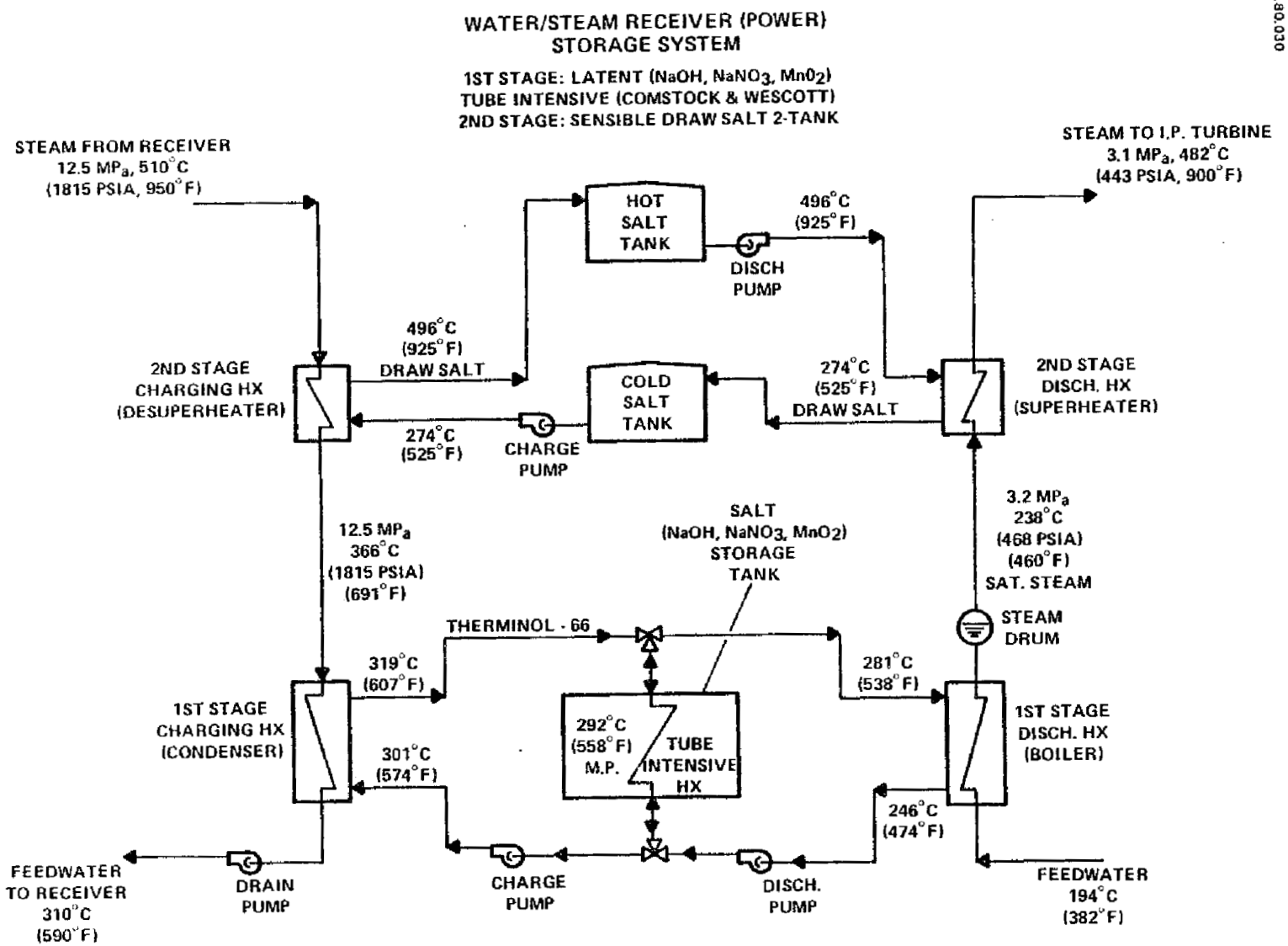

Figure 3–13. THERMAL STORAGE SYSTEM
LATENT, TUBE INTENSIVE - DRAW SALT (2-TANK)

"Thermkeep" salt is approximately 292°C (558°F), the water/steam receiver drain temperature was increased from 260°C (500°F) for the reference system to 310°C (590°F) as shown on the schematic, Figure 3-13. In order to maintain the same charging energy rate to the storage system as the reference, the charging heater drain pump flow rate was increased approximately 13 1/2% over the reference system. The discharging feedwater flow rate, temperatures and pressures are identical to the reference system.

During the charging mode of the first stage Therminol-66 is circulated from the latent storage system at 301°C (574°F) through the charging (condenser) heat exchanger where it is heated to 319°C (607°F) before returning to the top of the tube intensive heat exchanger coils. The energy transferred through the coils melts the "Thermkeep" salt at 558°F thereby utilizing the latent heat storage property of the salt at the melting temperature. During the discharging mode of the first stage the flow through the heat exchanger coils is reversed (i.e. entering at the bottom). The Therminol 66 oil leaving the tube intensive heat exchanger is heated to 281°C (538°F). The "T-66" is then circulated through the discharging heat exchanger (preheater, boiler), where it is cooled to 246°C (474°F) and directed back to the bottom of the tube intensive heat exchanger. The second stage system operates exactly the same as the reference system. The 2-stage storage system temperature profile is shown on Figure 3-14.

3.4.9.2 Thermal Storage Design Data

The conceptual design data for tube intensive heat exchanger - draw salt 2-tank storage system for 1, 6 and 15 hours of storage is shown in Tables 3-28, 3-29, and 3-30, respectively.

3.4.9.3 Discussion

The tube intensive heat exchanger thermal storage concept as designed in this study is not economically attractive for any of the three storage times (i.e., 1, 6 and 15 hours). However, an add-on study using a modified steam-to-salt tube intensive HX concept currently under design by Comstock & Wescott and Combustion Engineering [16] has been included in this report. For that revised system the capital investment should be significantly reduced since both the charging (steam/water-to-oil) heat exchangers and the discharging (oil-to-water/steam) heat exchangers and the Therminol 66 heat transport loop are eliminated. See Section 5.4 for the conceptual design and cost analysis of this modified tube intensive heat exchanger storage system.

3.4.10 Containerized Salt - Draw Salt (2 Tank)

3.4.10.1 System Description

This is an experiment in latent storage concepts with the containerized salt concept replacing the reference 1st stage Caloria/granite thermocline concept as shown in Figure 3-15. The 2nd stage draw salt (2 tank) system is essentially the same as the reference except that the charging desuperheater heat exchanger heat transfer area is approximately 13% smaller due to the increased delta-T (lmtd) for the 2nd stage.

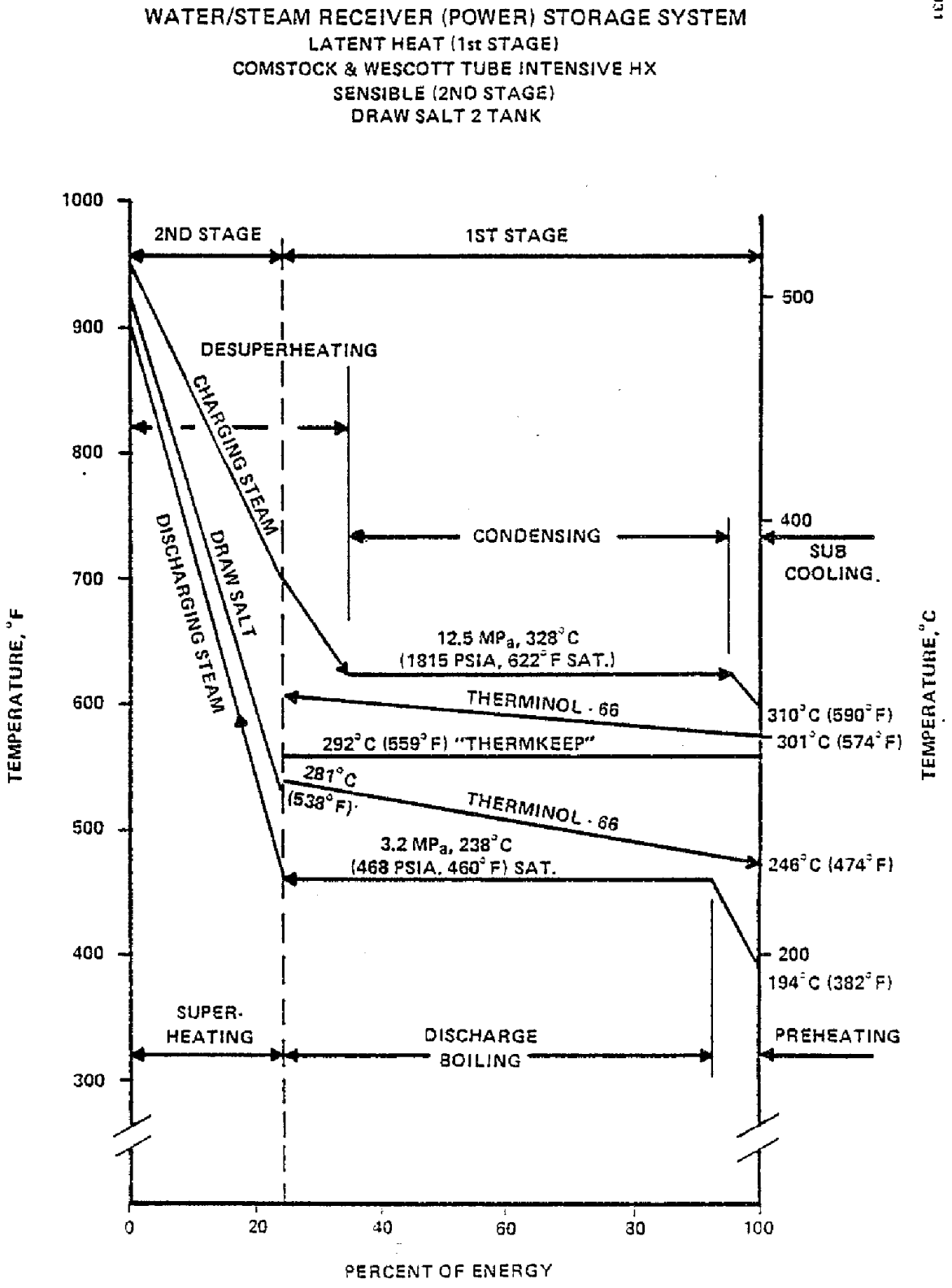

Figure 3—14. TEMPERATURE PROFILE
TUBE INTENSIVE HX - DRAW SALT (2-TANK)

Table 3-28. THERMAL STORAGE DESIGN DATA
WATER/STEAM RECEIVER - POWER
TUBE INTENSIVE HX - DRAW SALT (2 TANK)

HOURS OF STORAGE: One (1)

		Stage 1 OF 2
		Tube Intensive HX (Latent)
STORAGE MEDIA		
1. Operating Temperature		
a. Hot	°C (°F)	292 (558)
b. Cold	°C (°F)	292 (558)
2. Quantity (Total)		
a. Oil, Therminol 66	kg (ton)	0.28×10^6 (309)
b. Thermkeep Salt	kg (ton)	5.64×10^6 (6,204)
ENERGY RELATED EQUIPMENT		
1. Storage Capacity	$MW_t h$	171
2. Storage Tanks		
a. Quantity		Two (2)
b. Size, each (Dia.xHt.)	m(ft)	32 (105) x 2.44 (8)
c. Material		Carbon Steel
d. Weight, each	kg (ton)	94,773 (104.25)
3. Tank Insulation		
a. Type		Mineral Fiber w/Al Lagging
b. Thickness	m (ft)	0.23 (0.75)
4. Tank Foundation		
a. Type		Concrete Mat
b. Thickness	m (ft)	0.61 (2) Insul + 1.52 (5) Struct.
c. Quantity, Total	$m^3(yd^3)$	3,424 (4,478)

		Charging		Discharging
POWER RELATED EQUIPMENT				
1. Steam				
a. Flow, Total	kg/s (lb/hr)	21.6 (171,170)		86.7 (687,700)
b. Pressure	MPa (psia)	12.5 (1815)		3.2 (468)
c. Temperature	°C (°F)	353 (668)		238 (460)
2. Storage Fluid		Therminol 66		Therminol 66
a. Flow, Total	kg/s (lb/hr)	678 (5.38×10^6)		974 (7.73×10^6)
b. Pressure (Storage Tank)	MPa (psia)	Atmospheric		Atmospheric
c. Temperature (Pump)	°C (°F)	301 (574)		246 (474)
3. Pumps				
a. Quantity		2 - 50%		8 - 12-1/2%
b. Type		Horiz Centrif.		Horiz Centrif
c. Material		Carbon Steel		Carbon Steel
d. Fluid		Therminol 66		Therminol 66
e. Capacity, each	m^3/s (gpm)	0.41 (6600)		0.29 (4,537)
f. Head	m (ft)	50.3 (165)		41.1 (135)
g. Power (Shaft), each	kWe (hp)	223 (299)		141 (188.5)
h. Motor size	kWe (hp)	261 (350)		149 (200)
4. Heat Exchangers			HX Module[b]	
a. Quantity		2 - 50%	2 - 50%	2 - 50%
b. Type		Shell & Tube	Tube Coils	Drum Type
c. Material		Carbon Steel	Carbon Steel	Carbon Steel
d. Surface Area, Total	$m^2(ft^2)$	2,323 (25,000)	96,616 (1.04×10^6)	9,104 (98,000)
e. Duty, Total	MW_t	32.5		171
ANNUAL ENERGY				
1. Electrical Energy	10^6kWeh		1.278[a]	0.456
2. Electrical Energy(Per Stg)	10^6kWeh		1.734[a]	
3. Heat Loss (Per Stg)	10^9J(10^9BTU)		5,117 (4.85)	

Notes:
[a]Annual Electrical Energy (Charging) Includes Charging Heater Drain Pump Power (1st Stage). See Appendix D for Charging Heater Drain Pump Design Data.
[b]Same Heat Exchanger Modules Used for Charging and Discharging.

Table 3-28. THERMAL STORAGE DESIGN DATA (Continued) Sheet 2 of 2
WATER/STEAM RECEIVER - POWER
TUBE INTENSIVE HX - DRAW SALT (2 TANK)

HOURS OF STORAGE: One (1)

		Stage 2 OF 2 Draw Salt (2 Tank)	
STORAGE MEDIA			
1. Operating Temperature			
a. Hot	°C (°F)	496 (925)	
b. Cold	°C (°F)	274 (525)	
2. Quantity (Total)			
a. Draw Salt	kg (ton)	0.56×10^6 (621)	
ENERGY RELATED EQUIPMENT			
1. Storage Capacity	$MW_t h$	53	
2. Storage Tanks		Hot Tank	Cold Tank
a. Quantity		One (1)	One (1)
b. Size, each (Dia.xHt.)	m(ft)	9.1 (30)x5.5(18)	9.1 (30)x5.5(18)
c. Material		304 SS	Carbon Steel
d. Weight, each	kg (ton)	23,587 (26)	23,587 (26)
3. Tank Insulation			
a. Type		Mineral Fiber w/Al. Lag.	
b. Thickness	m (ft)	0.253 (0.833)	0.13 (0.417)
4. Tank Foundation			
a. Type		Concrete Mat	Concrete Mat
b. Thickness	m (ft)	1.22(4)Insul. +1.22(4)Struct.	0.61(2)Insul. +1.22(4)Struct.
c. Quantity, Total	$m^3(yd^3)$	161 (210)	122 (160)

		Charging	Discharging
POWER RELATED EQUIPMENT			
1. Steam			
a. Flow, Total	kg/s (lb/hr)	21.6(171,170)	86.65(687,700)
b. Pressure	MPa (psia)	12.5 (1,815)	3.1 (443)
c. Temperature	°C (°F)	510 (950)	482 (900)
2. Storage Fluid		Draw Salt	Draw Salt
a. Flow, Total	kg/s (lb/hr)	29 (0.23×10^6)	155 (1.23×10^6)
b. Pressure (Tank)	MPa (psia)	Atmospheric	Atmospheric
c. Temperature (Pump)	°C (°F)	274 (525)	496 (925)
3. Pumps			
a. Quantity		1-50%	2-50%
b. Type		Vert. Cantilever	Vert. Cantilever
c. Material		Carbon Steel	316 SS
d. Fluid		Draw Salt	Draw Salt
e. Capacity, each	m^3/s (gpm)	0.008 (122)	0.045 (710)
f. Head	m (ft)	41.1 (135)	46.3 (152)
g. Power (Shaft), each	kWe (hp)	7.8 (10.5)	47 (63)
h. Motor size	kWe (hp)	14.9 (20)	56 (75)
4. Heat Exchangers			
a. Quantity		1-50%	2-50%
b. Type		Shell & Tube	Shell & Tube
c. Material		304 SS	304 SS
d. Surface Area, Total	$m^2(ft^2)$	276 (2,967)	2,614 (28,140)
e. Duty, Total	MW_t	10	53
ANNUAL ENERGY			
1. Electrical Energy	10^6kWeh	0.0335[a]	0.0380
2. Electrical Energy(Per Stg)	10^6kWeh	0.0715	
3. Heat Loss (Per Stg)	10^9J(10^9BTU)	1,705 (1.616)	

Table 3-29. THERMAL STORAGE DESIGN DATA
WATER/STEAM RECEIVER - POWER
TUBE INTENSIVE HX - DRAW SALT (2 TANK)

HOURS OF STORAGE: Six (6)

		Stage 1 OF 2 Tube Intensive HX (Latent)
STORAGE MEDIA		
1. Operating Temperature		
a. Hot	°C (°F)	292 (558)
b. Cold	°C (°F)	292 (558)
2. Quantity (Total)		
a. Oil, Therminol 66	kg (ton)	232,364 (255.6)
b. Thermkeep Salt	kg (ton)	12.87 x 10^6 (14,152)
ENERGY RELATED EQUIPMENT		
1. Storage Capacity	$MW_t h$	1,026
2. Storage Tanks		
a. Quantity		Four (4)
b. Size, each (Dia.xHt.)	m(ft)	32 (105) x 2.44 (8)
c. Material		Carbon Steel
d. Weight, each	kg (ton)	94,773 (104.25)
3. Tank Insulation		
a. Type		Mineral Fiber w/Al Lagging
b. Thickness	m (ft)	0.102 (0.333)
4. Tank Foundation		
a. Type		Concrete Mat
b. Thickness	m (ft)	0.61 (2) Insul + 1.52 (5) Struct
c. Quantity, Total	$m^3(yd^3)$	6,848 (8956)

		Charging		Discharging
POWER RELATED EQUIPMENT				
1. Steam				
a. Flow, Total	kg/s (lb/hr)	129 (1.027 x 10^6)		86.7 (687,700)
b. Pressure	MPa (psia)	12.5 (1815)		3.2 (468)
c. Temperature	°C (°F)	353 (668)		238(460)
2. Storage Fluid		Therminol 66		Therminol 66
a. Flow, Total	kg/s (lb/hr)	4070 (32.3 x 10^6)		474 (7.73 x 10^6)
b. Pressure (Storage Tank)	MPa (psia)	Atmospheric		Atmospheric
c. Temperature (Pump)	°C (°F)	301 (574)		246 (474)
3. Pumps				
a. Quantity		12 - 8-1/3%		8 - 12-1/2%
b. Type		Horiz. Centrif.		Horiz. Centrif.
c. Material		Carbon Steel		Carbon Steel
d. Fluid		Therminol 66		Therminol 66
e. Capacity, each	m^3/s (gpm)	0.41 (6600)		0.29 (4537)
f. Head	m (ft)	50.3 (165)		41.1 (135)
g. Power (Shaft), each	kWe (hp)	223 (299)		141 (188.5)
h. Motor size	kWe (hp)	261 (350)		149 (200)
4. Heat Exchangers			HX Module[b]	
a. Quantity		2 - 50%	4 - 25%	2 - 50%
b. Type		Shell & Tube	Tube Coils	Drum Type
c. Material		Carbon Steel	Carbon Steel	Carbon Steel
d. Surface Area, Total	$m^2(ft^2)$	13,935(150,000)	48,308 (520,000)	9,104 (98,000)
e. Duty, Total	MW_t	195		171
ANNUAL ENERGY				
1. Electrical Energy	10^6kWeh	7.848[a]		2.738
2. Electrical Energy(Per Stg)	10^6kWeh		10.586[a]	
3. Heat Loss (Per Stg)	10^9J(10^9BTU)		18,811 (17.83)	

Notes:
[a]Annual Electrical Energy (Charging) Includes Charging Heater Drain Pump Power (1st Stage). See Appendix D for Charging Heater Drain Pump Design Data.
[b]Same Heat Exchanger Modules Used for Charging and Discharging.

Table 3-29. THERMAL STORAGE DESIGN DATA (Continued) Sheet 2 of 2
WATER/STEAM RECEIVER - POWER
TUBE INTENSIVE HX - DRAW SALT (2 TANK)

HOURS OF STORAGE: Six (6)

		Stage 2 OF 2	
		Draw Salt (2 Tank)	
STORAGE MEDIA			
1. Operating Temperature			
a. Hot	°C (°F)	496 (925)	
b. Cold	°C (°F)	274 (525)	
2. Quantity, Total			
a. Draw Salt	kg (ton)	3.4×10^6 (3,726)	
ENERGY RELATED EQUIPMENT			
1. Storage Capacity	$MW_t h$	318	
2. Storage Tanks		Hot Tank	Cold Tank
a. Quantity		One (1)	One (1)
b. Size, each (Dia. x Ht.)	m(ft)	16.8(55)x9.1(30)	16.8(55)x9.1(30)
c. Material		304 SS	Carbon Steel
d. Weight, each	kg (ton)	89,359 (98.5)	90,720 (100)
3. Tank Insulation			
a. Type		Mineral Fiber w/Al. Lag.	
b. Thickness	m (ft)	0.25 (0.83)	0.13 (0.417)
4. Tank Foundation			
a. Type		Concrete Mat	Concrete Mat
b. Thickness	m (ft)	1.22(4)Insul. +1.52(5)Struc.	0.61(2)Insul. +1.52(5)Struc.
c. Quantity,Total	$m^3(yd^3)$	608 (795)	474 (620)
		Charging	Discharging
POWER RELATED EQUIPMENT			
1. Steam			
a. Flow, Total	kg/s (lb/hr)	129 (1.027×10^6)	86.65 (687,700)
b. Pressure	MPa (psia)	12.5 (1,815)	3.1 (443)
c. Temperature	°C (°F)	510 (950)	482 (900)
2. Storage Fluid		Draw Salt	Draw Salt
a. Flow, Total	kg/s (lb/hr)	174 (1.38×10^6)	155 (1.23×10^6)
b. Pressure (Tank)	MPa (psia)	Atmospheric	Atmospheric
c. Temperature (Pump)	°C (°F)	274 (525)	496 (925)
3. Pumps			
a. Quantity		2 - 50%	2 - 50%
b. Type		Vert. Cantilever	Vert. Cantilever
c. Material		Carbon Steel	316 S.S.
d. Fluid		Draw Salt	Draw Salt
e. Capacity, each	m^3/s (gpm)	0.046 (730)	0.045 (710)
f. Head	m (ft)	46.3 (152)	46.3 (152)
g. Power, each	kWe (hp)	53 (71)	47 (63)
h. Motor size	kWe (hp)	75 (100)	56 (75)
4. Heat Exchangers			
a. Quantity		2 - 50%	2 - 50%
b. Type		Shell & Tube	Shell & Tube
c. Material		304 S.S.	304 S.S.
d. Surface Area, Total	$m^2(ft^2)$)	1,654 (17,800)	2,614 (28,140)
e. Duty, Total	MW_t	60	53
ANNUAL ENERGY			
1. Electrical Energy	10^6kWeh	0.225	0.228
2. Electrical Energy (Total/Stg)	10^6kWeh	0.453	
3. Heat Loss (Per Stg.)	10^9J(BTU)	5,191 (4.92)	

Table 3-30. THERMAL STORAGE DESIGN DATA
WATER/STEAM RECEIVER - POWER
TUBE INTENSIVE HX - DRAW SALT (2 TANK)

HOURS OF STORAGE: Fifteen (15)

		Stage 1 OF 2 Tube Intensive HX (Latent)
STORAGE MEDIA		
1. Operating Temperature		
a. Hot	°C (°F)	292 (558)
b. Cold	°C (°F)	292 (558)
2. Quantity (Total)		
a. Oil, Therminol 66	kg (ton)	0.42×10^6 (461)
b. Thermkeep Salt	kg (ton)	32.2×10^6 (35,375)
ENERGY RELATED EQUIPMENT		
1. Storage Capacity	MW_th	2565
2. Storage Tanks		
a. Quantity		Four (4)
b. Size, each (Dia.xHt.)	m(ft)	50.6 (166) x 2.44 (8)
c. Material		Carbon Steel
d. Weight, each	kg (ton)	229,727 (252.7)
3. Tank Insulation		
a. Type		Mineral Fiber w/Al Lagging
b. Thickness	m (ft)	0.102 (0.333)
4. Tank Foundation		
a. Type		Concrete Mat
b. Thickness	m (ft)	0.61 (2) Insul. + 1.52 (5) Struct.
c. Quantity, Total	$m^3(yd^3)$	17,159 (22,440)

		Charging	Discharging
POWER RELATED EQUIPMENT			
1. Steam			
a. Flow, Total	kg/s (lb/hr)	241.2 (1.914×10^6)	86.7 (687,700)
b. Pressure	MPa (psia)	12.5 (1815)	3.2 (468)
c. Temperature	°C (°F)	353 (668)	238 (460)
2. Storage Fluid		Therminol 66	Therminol 66
a. Flow, Total	kg/s (lb/hr)	7,585 (60.2×10^6)	974 (7.73×10^6)
b. Pressure (Storage Tank)	MPa (psia)	Atmospheric	Atomspheric
c. Temperature (Pump)	°C (°F)	301 (574)	246 (474)
3. Pumps			
a. Quantity		24 - 4-1/6%	8 - 12-1/2%
b. Type		Horiz. Centrif.	Horiz. Centrif.
c. Material		Carbon Steel	Carbon Steel
d. Fluid		Therminol 66	Therminol 66
e. Capacity, each	m^3/s (gpm)	0.39 (6,150)	0.29 (4537)
f. Head	m (ft)	50.3 (165)	41.1 (135)
g. Power (Shaft), each	kWe (hp)	208 (278.8)	141 (188.5)
h. Motor size	kWe (hp)	224 (300)	149 (200)

		HX Module[b]		
4. Heat Exchangers				
a. Quantity		4 - 25%	4 - 25%	2 - 50%
b. Type		Shell Tube	Tube Coil	Drum Type
c. Material		Carbon Steel	Carbon Steel	Carbon Steel
d. Surface Area, Total	$m^2(ft^2)$	25,969(279,540)	0.18×10^6(1.934×10^6)	9,104(98,000)
e. Duty, Total	MW_t	363.4	363.4	171

ANNUAL ENERGY				
1. Electrical Energy	10^6kWeh	19.989[a]		6.844
2. Electrical Energy(Per Stg)	10^6kWeh	26.833[a]		
3. Heat Loss (Per Stg)	10^9J(10^9BTU)	40.755 (38.63)		

Notes:
[a] Annual Electrical Energy (Charging) Includes Charging Heater Drain Pump Power (1st Stage). See Appendix D For Charging Heater Drain Pump Design Data.
[b]Same Heat Exchanger Modules Used for Charging and Discharging.

Table 3-30. THERMAL STORAGE DESIGN DATA (Continued
WATER/STEAM RECEIVER - POWER
TUBE INTENSIVE HX - DRAW SALT (2 TANK)

Sheet 2 of 2

HOURS OF STORAGE: Fifteen (15)

		Stage 2 OF 2 Draw Salt (2 Tank)	
STORAGE MEDIA			
1. Operating Temperature			
a. Hot	°C (°F)	496 (925)	
b. Cold	°C (°F)	274 (525)	
2. Quantity, Total			
a. Draw Salt	kg (ton)	8.5×10^6 (9,324)	
ENERGY RELATED EQUIPMENT			
1. Storage Capacity	$MW_t h$	795	
2. Storage Tanks		Hot Tank	Cold Tank
a. Quantity		Two (2)	Two (2)
b. Size, each (Dia.xHt.)	m(ft)	18.9(62)x9.1(30)	18.9(62)x9.1(30)
c. Material		304 SS	Carbon Steel
d. Weight, each	kg (ton)	0.11×10^6 (117)	0.12×10^6(134.5)
3. Tank Insulation			
a. Type		Mineral Fiber w/Al. Lag.	
b. Thickness	m (ft)	0.253 (0.833)	0.13 (0.417)
4. Tank Foundation			
a. Type		Concrete Mat	Concrete Mat
b. Thickness	m (ft)	1.22(4)Insul. +1.52(5) Struct.	0.61(2)Insul. +1.52(5) Struct.
c. Quantity, Total	$m^3(yd^3)$	1,539 (2,012)	1,197 (1,566)

		Charging	Discharging
POWER RELATED EQUIPMENT			
1. Steam			
a. Flow, Total	kg/s (lb/hr)	241(1.91×10^6)	86.65(687,700)
b. Pressure	MPa (psia)	12.5 (1,815)	3.1 (443)
c. Temperature	°C (°F)	510 (950)	482 (900)
2. Storage Fluid		Draw Salt	Draw Salt
a. Flow, Total	kg/s (lb/hr)	324 (2.57×10^6)	155(1.23×10^6)
b. Pressure (Tank)	MPa (psia)	Atmospheric	Atmospheric
c. Temperature (Pump)	°C (°F)	274 (525)	496 (925)
3. Pumps			
a. Quantity		2-50%	2-50%
b. Type		Vert. Cantilever	Vert. Cantilever
c. Material		Carbon Steel	316 SS
d. Fluid		Draw Salt	Draw Salt
e. Capacity, each	m^3/s (gpm)	0.086 (1,361)	0.045 (710)
f. Head	m (ft)	46.3 (152)	46.3 (152)
g. Power (Shaft), each	kWe (hp)	99 (132)	47 (63)
h. Motor size	kWe (hp)	149 (200)	56 (75)
4. Heat Exchangers			
a. Quantity		4-25%	2-50%
b. Type		Shell & Tube	Shell & Tube
c. Material		304 SS	304 SS
d. Surface Area, Total	$m^2(ft^2)$	3,081 (33,168)	2,614 (28,140)
e. Duty, Total	MW_t	111.8	53
ANNUAL ENERGY			
1. Electrical Energy	10^6kWeh	0.565	0.5705
2. Electrical Energy(Per Stg)	10^6kWeh	1.136	
3. Heat Loss (Per Stg)	10^9J(10^9BTU)	12,270 (11.63)	

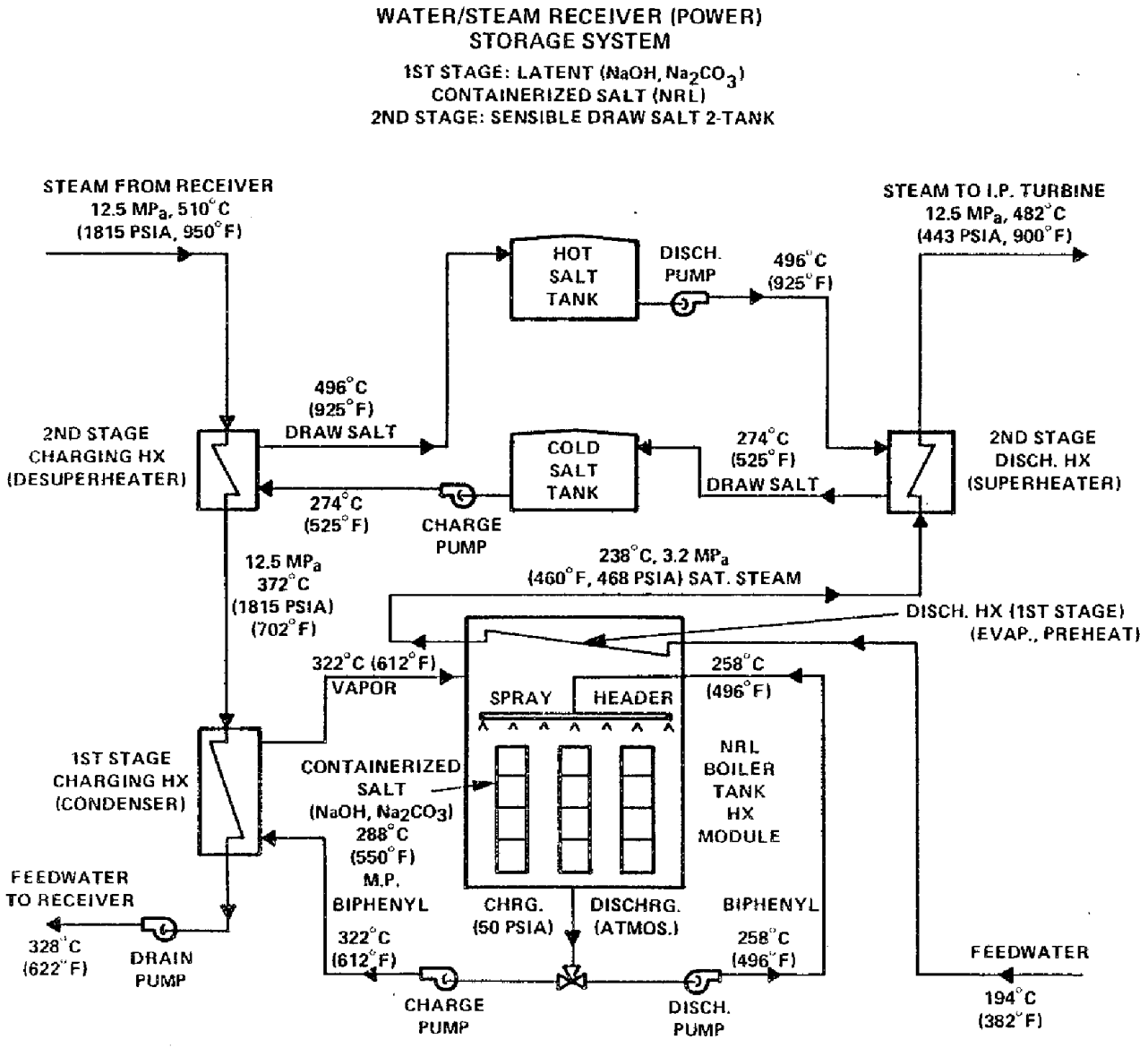

Figure 3–15. THERMAL STORAGE SYSTEM
LATENT, CONTAINERIZED SALT - DRAW SALT (2-TANK)

The boiler tank containerized salt thermal storage concept has been developed by the Naval Research Laboratory [6] for use as a phase-change (i.e., latent) thermal storage system in contrast to the reference system which utilizes only the sensible heat capacity of the storage media.

The Naval Research Laboratory reference 2 MWt boiler tank design [6] uses a salt eutectic ($MgCl_2$,NaCl, KCl) and m-terphenyl as a heat transfer fluid. However, the melting point of the chloride salt is 385°C (725°F) which is above the saturation temperature 328°C (622°F) of the charging steam. Therefore an alternate salt (NaOH, Na_2CO_3) was used as recommended by NRL. Furthermore an alternate heat transfer fluid "biphenyl" was used as recommended by Dr. Chubb, NRL[17]. The salt is encapsulated in mild steel cans similar to that used in the food industry. The can diameter is 0.102 m (0.33 ft.) and the can height is 0.462 m (1.52 ft.). The cans have screw-on lids with a punched vent hole to allow pressure differential relief. Thousands of cans are placed in rows and stacked several cans high within the boiler tank. The thermal energy is transmitted to the salt through the surface heat transfer area of the salt containers. In order to utilize the subject salt (melting point = 288°C (550°F)) the reference drain temperature was increased from 260°C (500°F) to saturated water at 328°C (622°F) as shown on the schematic, Figure 3-15. In order to maintain the same charging energy rate to the storage system as the reference, the charging heater drain pump flow rate was increased approximately 20% over the reference system. The discharging steam flow rate, temperatures and pressures are identical to the reference system. However, the question was raised on why not deliver the steam at a higher pressure. Basically this would involve a parametric optimization study not just on pressure but the effect on heat exchanger sizing, turbine reheat pressure, pumping requirements, and staging thermal storage distribution. It particularly is more complicated with a two stage thermal storage system. Although a thorough optimization study could result in a potentially less expensive containerized salt storage system the study would be complicated.

During the charging mode of the first stage liquid biphenyl oil is circulated at 322°C (612°F) from the bottom of the latent storage system (boiler tank) through the condensing heat exchanger where it is heated to saturated vapor at 322°C (612°F). The biphenyl vapor is then directed to the top of the pressurized (50 psia) boiler tank where it is condensed on the surface of the containerized salt. The thermal energy is subsequently transferred by conduction through the can walls and into the salt by conduction and natural convection thereby melting the salt and utilizing the latent heat capacity of the salt for energy storage. During the discharging mode of the first stage the biphenyl liquid is pumped from the bottom of the boiler tank at 258°C (496°F) thru a distribution sparger at the top of the boiler tank. The biphenyl is vaporized as it flows over the hot containerized salt cans. The vaporized biphenyl is subsequently condensed within the approximately atmospheric pressure boiler tank on the preheater/boiler heat exchange tubes thereby heating the feedwater from 194°C (382°F) to saturated steam at 238°C (460°F). The condensed biphenyl then falls to the bottom of the boiler tank for recirculation. The second stage operates exactly like the reference system. The 2-stage storage system temperature profile is shown on Figure 3-16.

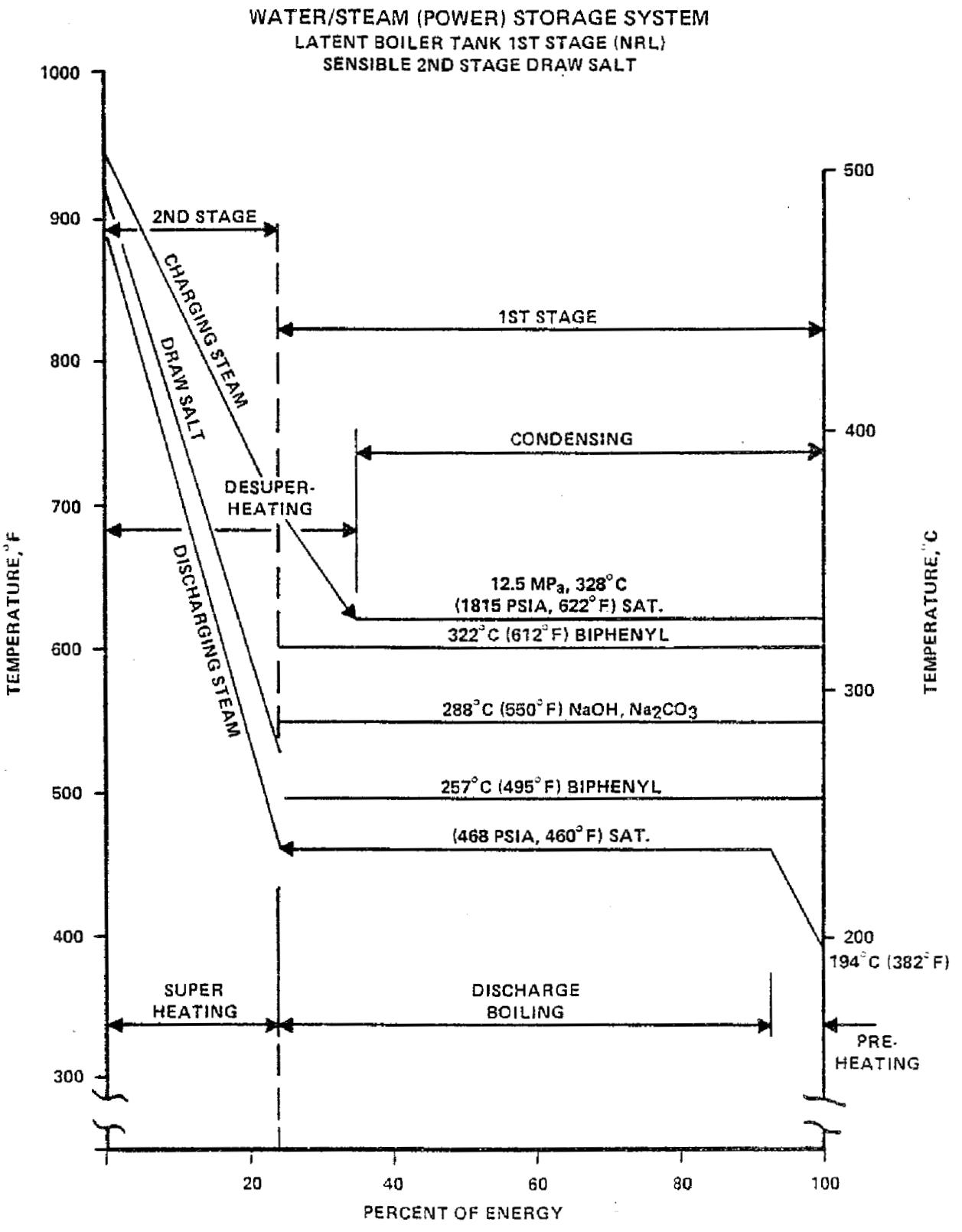

Figure 3–16. TEMPERATURE PROFILE
CONTAINERIZED SALT - DRAW SALT (2-TANK)

3.4.10.2 Thermal Storage Design Data

The conceptual design data for the containerized salt boiler tank - draw salt 2-tank storage system for 1, 6 and 15 hours of storage is shown in Tables 3-31, 3-32, and 3-33, respectively.

3.4.10.3 Discussion

The containerized salt - boiler tank thermal storage concept as designed in this study becomes more economically feasible for longer durations of storage time (i.e. 15 hours) as compared to the reference case. However, it is still not the cheapest thermal storage system on an evaluated basis. Three main technical areas have been identified by the Naval Research Laboratory [6] in energy storage units using containerized salts as the energy storing media. These include the problem of transferring heat from the input surfaces during charging. This problem is somewhat eliminated by the using a forced flow tube and shell heat exchanger to heat the biphenyl. Furthermore the second problem of distributing the heat uniformly is also somewhat eliminated by the biphenyl vapor being injected into the boiler tank and condensing on the colder salt cans. This condensation is somewhat compensating due to the hot vapor seeking the cooler surfaces. The third problem involves the removing of heat from the salt cans and delivering it to the boiler tubes. This area is potentially the target technical problem and involves distribution spray headers, vapor flow paths, free flow area, etc. Other potential pitfalls include the area of corrosion; namely the possibility that the salt will attack the salt containers during their life. The laboratory studies at NRL indicate that corrosion is not a problem if the storage salts are thoroughly dried. However, the salt used in this application has not been tested by NRL. In addition the full scale 2 MW_t boiler tank containerized salt experiment has not been completed to verify if the concept is feasible on other than a small lab scale.

3.4.11 Direct Contact (Latent) - Phase Change Media (PCM)

3.4.11.1 System Description

This is an experiment in latent storage concepts with the direct contact (latent) heat exchanger concept replacing the first stage reference Caloria/granite thermocline system. This active heat exchanger concept is in contrast to the passive heat exchanger used in Comstock-Wescott tube intensive heat exchanger design. The reference second stage draw salt 2-tank has been replaced with a one hot tank containing the first stage phase change media (PCM) and with the cold tank (PCM) being part of the first stage system, thereby eliminating the cold tank part of the second stage. The direct contact - PCM thermal storage system schematic is given in Figure 3-17.

The direct contact heat exchanger concept utilized here has developed by Grumman Aerospace Corporation [5] and modified by John Wright (SERI) and Joe Alario (Grumman) to include an external (to the storage tank) forced convection charging heat exchanger instead of the original internal natural convection charging heat exchanger.

Table 3-31. THERMAL STORAGE DESIGN DATA
WATER/STEAM RECEIVER - POWER
CONTAINERIZED SALT - DRAW SALT (2 TANK)

Sheet 1 of 2

HOURS OF STORAGE: One (1)

		STAGE 1 OF 2
		Containerized Salt (Latent)
STORAGE MEDIA		
1. Operating Temperature		
a. Hot	°C (°F)	288 (550)
b. Cold	°C (°F)	288 (550)
2. Quantity (Total)		
a. Oil, Biphenyl	kg (ton)	0.27×10^6 (296.7)
b. NaOH, Na_2CO_3 Salt	kg (ton)	4.65×10^6 (5,116)
ENERGY RELATED EQUIPMENT		
1. Storage Capacity	MW_th	171
2. Storage Tanks		
a. Quantity		Two (2)
b. Size, each (Dia.xHt.)	m(ft)	20.4 (67) x 12.2 (40)
c. Material		SA-516 Carbon Steel
d. Weight, each	kg (ton)	0.27×10^6 (295.4)
3. Tank Insulation		
a. Type		Mineral Fiber w/Al Lagging
b. Thickness	m (ft)	0.23 (0.75)
4. Tank Foundation		
a. Type		Concrete Mat
b. Thickness	m (ft)	0.61 (2) Insul + 1.52 (5) Struct.
c. Quantity, Total	$m^3(yd^3)$	1,398 (1,828)

		Charging		Discharging
POWER RELATED EQUIPMENT				
1. Steam				
a. Flow, Total	kg/s (lb/hr)	22.9 (0.182×10^6)		86.7 (687,700)
b. Pressure	MPa (psia)	12.5 (1815)		3.2 (468)
c. Temperature	°C (°F)	372 (702)		238 (460)
2. Storage Fluid		Biphenyl		Biphenyl
a. Flow, Total	kg/s (lb/hr)	36.85 (0.584×10^6)		193.8 (3.07×10^6)
b. Pressure (Storage Tank)	MPa (psia)	0.34 (50)		Atmospheric
c. Temperature (Pump)	°C (°F)	322 (612)		258 (496)
3. Pumps				
a. Quantity		2 - 50%		2 - 50%
b. Type		Horiz. Centrif.		Horiz. Centrif
c. Material		Carbon Steel		Carbon Steel
d. Fluid		Biphenyl		Biphenyl
e. Capacity, each	m^3/s (gpm)	0.047 (750)		0.23 (3668)
f. Head	m (ft)	30.5 (100)		25.6 (84)
g. Power (Shaft), each	kWe (hp)	14.7 (19.7)		64.8 (86.9)
h. Motor size	kWe (hp)	14.9 (20)		75 (100)
4. Heat Exchangers				
a. Quantity		2 - 50%	0.679×10^6cans	2 - 50%
b. Type		Shell & Tube	Containers	Tube-in-Boiler Tank
c. Material		Carbon Steel	Carbon Steel	Carbon Steel
d. Surface Area, Total	$m^2(ft^2)$	2,137 (23,000)	100,330 (1.08×10^6)	10,498 (113,000)
e. Duty, Total	MW_t	32.5		171
ANNUAL ENERGY				
1. Electrical Energy	10^6kWeh	0.393[a]		0.0576
2. Electrical Energy(Per Stg)	10^6kWeh		0.4436[a]	
3. Heat Loss (Per Stg)	10^9J(10^9BTU)		4,558 (4.32)	

Notes:
[a]Annual Electrical Energy (Charging) Includes Charging Heater Drain Pump Power (1st Stage). See Appendix D for Charging Heater Drain Pump Design Data.

Table 3-31. THERMAL STORAGE DESIGN DATA (Continued) Sheet 2 of 2
WATER/STEAM RECEIVER - POWER
CONTAINERIZED SALT - DRAW SALT (2 TANK)

HOURS OF STORAGE: One (1)

		STAGE 2 OF 2 Draw Salt (2 Tank)	
STORAGE MEDIA			
1. Operating Temperature			
a. Hot	°C (°F)	496 (925)	
b. Cold	°C (°F)	274 (525)	
2. Quantity (Total)			
a. Draw Salt	kg (ton)	0.56×10^6 (621)	
ENERGY RELATED EQUIPMENT			
1. Storage Capacity	$MW_t h$	53	
2. Storage Tanks		Hot Tank	Cold Tank
a. Quantity		One (1)	One (1)
b. Size, each (Dia.xHt.)	m(ft)	9.1(30x5.5(18)	9.1(30)x5.5(18)
c. Material		304 SS	Carbon Steel
d. Weight, each	kg (ton)	23,587 (26)	23,587 (26)
3. Tank Insulation			
a. Type		Mineral Fiber w/Al Lagging	
b. Thickness	m (ft)	0.253(0.833)	0.13(0.417)
4. Tank Foundation			
a. Type		Concrete Mat	Concrete Mat
b. Thickness	m (ft)	1.22 (4) Insul. + 1.22 (4) Struct.	0.61 (2) Insul. +1.22 (4) Struct.
c. Quantity, Total	$m^3(yd^3)$	161 (210)	122 (160)

		Charging	Discharging
POWER RELATED EQUIPMENT			
1. Steam			
a. Flow, Total	kg/s (lb/hr)	22.9 (0.182×10^6)	86.65 (687,700)
b. Pressure	MPa (psia)	12.5 (1,815)	3.1 (443)
c. Temperature	°C (°F)	510 (950)	482 (900)
2. Storage Fluid		Draw Salt	Draw Salt
a. Flow, Total	kg/s (lb/hr)	29 (0.23×10^6)	155 (1.23×10^6)
b. Pressure (Storage Tank)	MPa (psia)	Atmospheric	Atmospheric
c. Temperature (Pump)	°C (°F)	274 (525)	496 (925)
3. Pumps			
a. Quantity		2 - 50%	2 - 50%
b. Type		Vert. Cantilever	Vert. Cantilever
c. Material		Carbon Steel	316 SS
d. Fluid		Draw Salt	Draw Salt
e. Capacity, each	m^3/s (gpm)	0.008 (122)	0.045 (710)
f. Head	m (ft)	41.1 (135)	46.3 (152)
g. Power (Shaft), each	kWe (hp)	7.8 (10.5)	47 (63)
h. Motor size	kWe (hp)	14.9 (20)	56 (75)
4. Heat Exchangers			
a. Quantity		1 - 50%	2 - 50%
b. Type		Shell & Tube	Shell & Tube
c. Material		304 SS	304 SS
d. Surface Area, Total	$m^2(ft^2)$	264 (2,843)	2,614 (28,140)
e. Duty, Total	MW_t	10	53
ANNUAL ENERGY			
1. Electrical Energy	10^6kWeh	0.0335a	0.0380
2. Electrical Energy(Per Stg)	10^6kWeh	0.0715a	
3. Heat Loss (Per Stg)	10^9J(10^9BTU)	1.705 (1.616)	

Table 3-32. THERMAL STORAGE DESIGN DATA
WATER/STEAM RECEIVER - POWER
CONTAINERIZED SALT - DRAW SALT (2 TANK)

Sheet 1 of 2

HOURS OF STORAGE: Six (6)

		STAGE 1 OF 2
		Containerized Salt (Latent)
STORAGE MEDIA		
1. Operating Temperature		
a. Hot	°C (°F)	288 (550)
b. Cold	°C (°F)	288 (550)
2. Quantity (Total)		
a. Oil, Biphenyl	kg (ton)	0.87×10^6 (956)
b. NaOH, Na_2CO_3 Salt	kg (ton)	15.0×10^6 (16,485)
ENERGY RELATED EQUIPMENT		
1. Storage Capacity	MW_th	1,026
2. Storage Tanks		Eight (8)
a. Quantity		18.3 (60) x 11 (36)
b. Size, each (Dia.xHt.)	m(ft)	SA-516 Carbon Steel
c. Material		0.206×10^6 (226.4)
d. Weight, each	kg (ton)	
3. Tank Insulation		Mineral Fiber w/Al Lagging
a. Type		0.13 (0.42)
B. Thickness	m (ft)	
4. Tank Foundation		Concrete Mat
a. Type		0.61 (2) Insul. + 1.52 (5) Struct.
b. Thickness	m (ft)	4,484 (5,864)
c. Quantity, Total	$m^3(yd^3)$	

		Charging	Discharging
POWER RELATED EQUIPMENT			
1. Steam		137.3 (1.09×10^6)	86.7 (687,700)
a. Flow, Total	kg/s (lb/hr)	12.5 (1,815)	3.2 (468)
b. Pressure	MPa (psia)	372 (702)	238 (460)
c. Temperature	°C (°F)		
2. Storage Fluid		Biphenyl	Biphenyl
a. Flow, Total	kg/s (lb/hr)	221.1 (3.505×10^6)	193.8 (3.07×10^6)
b. Pressure (Storage Tank)	MPa (psia)	0.34 (50)	Atmospheric
c. Temperature (Pump)	°C (°F)	322 (612)	258 (496)
3. Pumps			
a. Quantity		8 - 12-1/2%	8 - 12-1/2%
b. Type		Horiz. Centrif.	Horiz. Centrif.
c. Material		Carbon Steel	Carbon Steel
d. Fluid		Biphenyl	Biphenyl
e. Capacity, each	m^3/s (gpm)	0.07 (1,125)	0.06 (917)
f. Head	m (ft)	30.5 (100)	24.4 (80)
g. Power (Shaft), each	kWe (hp)	22 (29.5)	15.4 (20.7)
h. Motor size	kWe (hp)	22.4 (30)	18.7 (25)

4. Heat Exchangers				
a. Quantity		8 - 12-1/2%	2.189×10^6cans	8 - 12-1/2%
b. Type		Shell & Tube	Containerized	Tubes-in-Boiler Tank
c. Material		Carbon Steel	Carbon Steel	Carbon Steel
d. Surface Area, Total	$m^2(ft^2)$	12,802 (137,800)	323,290 (3.48×10^6)	10,498 (113,000)
e. Duty, Total	MW_t	195	195	171

ANNUAL ENERGY			
1. Electrical Energy	10^6kWeh	2.545[a]	0.3
2. Electrical Energy(Per Stg)	10^6kWeh	2.845[a]	
3. Heat Loss (Per Stg)	10^9J/(10^9BTU)	25,689 (24.35)	

Notes:
[a]Annual Electrical Energy (Charging) Includes Charging Heater Drain Pump Power (1st Stage). See Appendix B for Charging Heater Drain Pump Design Data.

Table 3-32. THERMAL STORAGE DESIGN DATA (Continued) Sheet 2 of 2
WATER/STEAM RECEIVER - POWER
CONTAINERIZED SALT - DRAW SALT (2 TANK)

HOURS OF STORAGE: Six (6)

		STAGE 2 OF 2 Draw Salt (2 Tank)	
STORAGE MEDIA			
1. Operating Temperature			
a. Hot	°C (°F)	496 (925)	
b. Cold	°C (°F)	274 (525)	
2. Quantity (Total)			
a. Draw Salt	kg (ton)	3.4×10^6 (3,726)	
ENERGY RELATED EQUIPMENT			
1. Storage Capacity	$MW_t h$	318	
2. Storage Tanks		Hot Tank	Cold Tank
a. Quantity		One (1)	One (1)
b. Size, each (Dia.xHt.)	m(ft)	16.8 x 9.1(30)	16.8 (55) x 9.1(30)
c. Material		304 SS	Carbon Steel
d. Weight, each	kg (ton)	89,359 (98.5)	90,720 (100)
3. Tank Insulation			
a. Type		Mineral Fiber w/Al Lagging	
b. Thickness	m (ft)	0.25 (0.83)	0.13(0.417)
4. Tank Foundation			
a. Type		Concrete Mat	Concrete Mat
b. Thickness	m (ft)	1.22 (4) Insul. + 1.52 (5) Struct.	0.61 (2) Insul. +1.52 (5) Struct.
c. Quantity, Total	$m^3(yd^3)$	608 (795)	474 (620)

		Charging	Discharging
POWER RELATED EQUIPMENT			
1. Steam			
a. Flow, Total	kg/s (lb/hr)	137.3 (1.09×10^6)	86.65 (687,700)
b. Pressure	MPa (psia)	12.5 (1,815)	3.1 (443)
c. Temperature	°C (°F)	510 (950)	482 (900)
2. Storage Fluid		Draw Salt	Draw Salt
a. Flow, Total	kg/s (lb/hr)	174(1.38×10^6)	155 (1.23×10^6)
b. Pressure (Storage Tank)	MPa (psia)	Atmospheric	Atmospheric
c. Temperature (Pump)	°C (°F)	274 (525)	496 (925)
3. Pumps			
a. Quantity		2 - 50%	2 - 50%
b. Type		Vert. Cantilever	Vert. Cantilever
c. Material		Carbon Steel	316 SS
d. Fluid		Draw Salt	Draw Salt
e. Capacity, each	m^3/s (gpm)	0.046 (730)	0.045 (710)
f. Head	m (ft)	46.3 (152)	46.3 (152)
g. Power (Shaft), each	kWe (hp)	53 (71)	47 (63)
h. Motor size	kWe (hp)	75 (100)	56 (75)
4. Heat Exchangers			
a. Quantity		2 - 50%	2 - 50%
b. Type		Shell & Tube	Shell & Tube
c. Material		304 SS	304 SS
d. Surface Area, Total		1,585 (17,058)	2,614 (28,140)
e. Duty, Total	MW_t	60	53
ANNUAL ENERGY			
1. Electrical Energy	10^6kWeh	0.225	0.228
2. Electrical Energy(Per Stg)	10^6kWeh	0.453	
3. Heat Loss (Per Stg)	10^9J(10^9BTU)	5,191 (4.92)	

Table 3-33. THERMAL STORAGE DESIGN DATA
WATER/STEAM RECEIVER - POWER
CONTAINERIZED SALT - DRAW SALT (2 TANK)

Sheet 1 of 2

HOURS OF STORAGE: Fifteen (15)

		STAGE 1 OF 2
		Containerized Salt (Latent)
STORAGE MEDIA		
1. Operating Temperature		
a. Hot	°C (°F)	288 (550)
b. Cold	°C (°F)	288 (550)
2. Quantity (Total)		
a. Oil, Biphenyl	kg (ton)	1.91×10^6 (2099)
b. NaOH, Na_2CO_3 Salt	kg (ton)	32.91×10^6 (36,200)
ENERGY RELATED EQUIPMENT		
1. Storage Capacity	$MW_t h$	2,565
2. Storage Tanks		
a. Quantity		Eighteen (18)
b. Size, each (Dia.xHt.)	m(ft)	18.3 (60) x 11 (36)
c. Material		SA-516 Carbon Steel
d. Weight, each	kg (ton)	205,450 (226)
3. Tank Insulation		
a. Type		Mineral Fiber w/Al Lagging
b. Thickness	m (ft)	0.102 (0.333)
4. Tank Foundation		
a. Type		Concrete Mat
b. Thickness	m (ft)	0.61 (2) Insul. + 1.52 (5) Struct.
c. Quantity, Total	$m^3(yd^3)$	10,089 (13,194)

		Charging		Discharging
POWER RELATED EQUIPMENT				
1. Steam				
a. Flow, Total	kg/s (lb/hr)	256 (2.03×10^6)		86.7 (687,700)
b. Pressure	MPa (psia)	12.5 (1,815)		3.2 (468)
c. Temperature	°C (°F)	372 (702)		238 (460)
2. Storage Fluid		Biphenyl		Biphenyl
a. Flow, Total	kg/s (lb/hr)	412.1 (6.53×10^6)		193.8 (3.07×10^6)
b. Pressure (Storage Tank)	MPa (psia)	0.34 (50)		Atmospheric
c. Temperature (Pump)	°C (°F)	322 (612)		258 (496)
3. Pumps				
a. Quantity		18 - 5-1/2%		18 - 5-1/2%
b. Type		Horiz Centrif.		Horiz Centrif.
c. Material		Carbon Steel		Carbon Steel
d. Fluid		Biphenyl		Biphenyl
e. Capacity, each	m^3/s (gpm)	0.06 (932)		0.026 (407.6)
f. Head	m (ft)	30.5 (100)		24.4 (80)
g. Power (Shaft), each	kWe (hp)	18.2 (24.4)		6.9 (9.2)
h. Motor size	kWe (hp)	18.7 (25)		7.5 (10)
4. Heat Exchangers				
a. Quantity		18 - 5-1/2%	4.807×10^6 cans	18 - 5-1/2%
b. Type		Shell & Tube	Containerized	Tubes-in-Boiler Tank
c. Material		Carbon Steel	Mild Steel	Carbon Steel
d. Surface Area, Total	$m^2(ft^2)$	23,857(256,800)	709,760 (7.64×10^6)	10,498 (113,000)
e. Duty, Total	MW_t	363.4		171
ANNUAL ENERGY				
1. Electrical Energy	10^6kWeh	6.739[a]		0.751
2. Electrical Energy(Per Stg)	10^6kWeh		7.49[a]	
3. Heat Loss (Per Stg)	10^9J(10^9BTU)		68,997 (65.4)	

Notes:
[a]Annual Electrical Energy (Charging) Includes Charging Heater Drain Pump Power (1st Stage). See Appendix D for Charging Heater Drain Pump Design Data.

Table 3-33. THERMAL STORAGE DESIGN DATA (Continued) Sheet 2 of 2
WATER/STEAM RECEIVER - POWER
CONTAINERIZED SALT - DRAW SALT (2 TANK)

HOURS OF STORAGE: Fifteen (15)

		STAGE 2 OF 2 Draw Salt (2 Tank)	
STORAGE MEDIA			
1. Operating Temperature			
a. Hot	°C (°F)	496 (925)	
b. Cold	°C (°F)	274 (525)	
2. Quantity (Total)			
a. Draw Salt	kg (ton)	8.5×10^6 (9,324)	
ENERGY RELATED EQUIPMENT			
1. Storage Capacity	$MW_t h$	795	
2. Storage Tanks		Hot Tank	Cold Tank
a. Quantity		Two (2)	Two (2)
b. Size, each (Dia.xHt.)	m(ft)	18.9(62) x 9.1 (30)	18.9(62)x9.1(30)
c. Material		304 SS	Carbon Steel
d. Weight, each	kg (ton)	0.11×10^6 (117))	0.12×10^6 (134.5)
3. Tank Insulation			
a. Type		Mineral Fiber w/AL Lagging	
b. Thickness	m (ft)	0.253(0.833)	0.13(0.417)
4. Tank Foundation			
a. Type		Concrete Mat	Concrete Mat
b. Thickness	m (ft)	1.22 (4) Insul. + 1.52 (5) Struct.	0.61 (2) Insul. +1.52 (5) Struct.
c. Quantity, Total	m^3 (yd^3)	1,539 (2,012)	1,197 (1,566)

		Charging	Discharging
POWER RELATED EQUIPMENT			
1. Steam			
a. Flow, Total	kg/s (lb/hr)	256 (2.03×10^6)	86.65 (687,700)
b. Pressure	MPa (psia)	12.5 (1,815)	3.1 (443)
c. Temperature	°C (°F)	510 (950)	482 (900)
2. Storage Fluid		Draw Salt	Draw Salt
a. Flow, Total	kg/s (lb/hr)	342(2.57×10^6)	155 (1.23×10^6)
b. Pressure (Storage Tank)	MPa (psia)	Atmospheric	Atmospheric
c. Temperature (Pump)	°C (°F)	274 (525)	496 (925)
3. Pumps			
a. Quantity		2 - 50%	2 - 50%
b. Type		Vert. Cantilever	Vert. Cantilever
c. Material		Carbon Steel	316 SS
d. Fluid		Draw Salt	Draw Salt
e. Capacity, each	m^3/s (gpm)	0.086 (1,361)	0.045 (710)
f. Head	m (ft)	46.3 (152)	46.3 (152)
g. Power (Shaft), each	kWe (hp)	99 (132)	47 (63)
h. Motor size	kWe (hp)	149 (200)	56 (75)
4. Heat Exchangers			
a. Quantity		4 - 25%	2 - 50%
b. Type		Shell & Tube	Shell & Tube
c. Material		304 SS	304 SS
d. Surface Area, Total	m^2(ft^2)	2,961 (31,876)	2,614 (28,140)
e. Duty, Total	MW_t	111.8	53
ANNUAL ENERGY			
1. Electrical Energy	10^6kWeh	0.565	0.5705
2. Electrical Energy(Per Stg)	10^6kWeh	1.136	
3. Heat Loss (Per Stg)	10^9J(10^9BTU)	12,270 (11.63)	

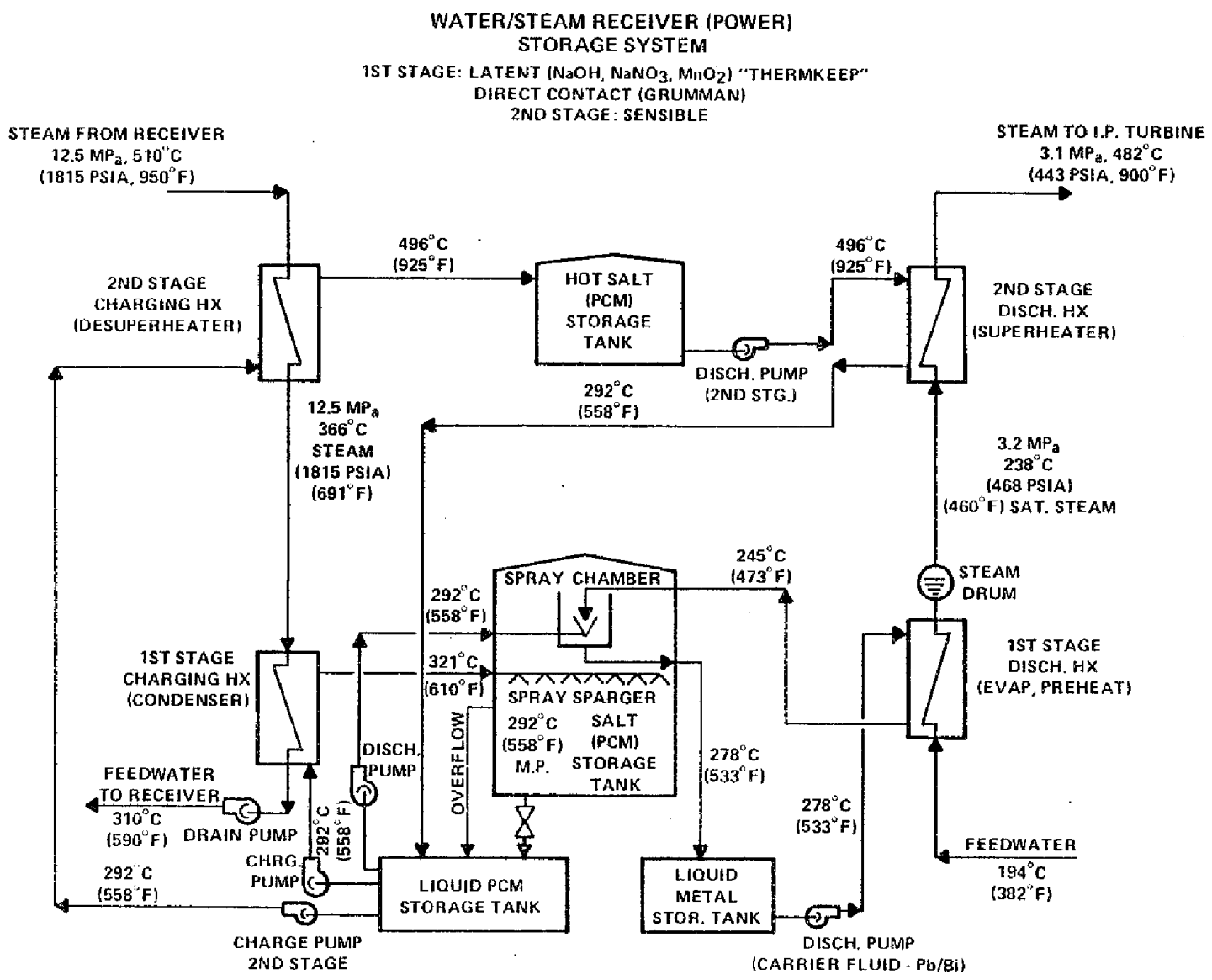

Figure 3–17. THERMAL STORAGE SYSTEM
LATENT, DIRECT CONTACT - PCM (2-STAGE)

The direct contact feature of this storage method is only utilized during the discharging mode of operation. Since the melting temperature of the "Thermkeep" salt (NaOH, $NaNO_3$, MnO_2) is approximately 292°C (558°F), the water/steam receiver drain temperature was increased from 260°C (500°F) for the reference system to 310°C (590°F) as shown on the schematic, Figure 3-17. In order to maintain the same charging energy rate to the storage system the charging heater drain pump flow rate was increased approximately 13 1/2% over the reference system. The discharging steam flow rate, temperatures and pressures are identical to the reference system.

During the charging mode of the second stage molten "Thermkeep" salt at 292°C (558°F) is circulated from the first stage liquid PCM priming storage tank through the second stage charging heat exchanger (desuperheater), heated to 496°C (925°F) and directed to the second stage hot salt (PCM) storage tank. During the charging mode of the first stage molten "Thermkeep" salt at 292°C (558°F) is circulated from the first stage liquid PCM storage tank through the first stage charging heat exchanger (condenser), heated to 321°C (610°F) and directed to the first stage salt storage tank where the hot liquid salt melts the stored salt solid granules. During the discharging mode of the second stage hot molten salt at 496°C (925°F) is circulated through the discharging heat exchanger, cooled to 292°C (558°F) and directed to the first stage liquid PCM priming storage tank. During the discharging mode of the first stage liquid salt at 292°C (558°F) is directed to the spray chamber within the large 1st stage salt (PCM) storage tank. At the same time liquid metal, Pb/Bi, a heat transfer carrier fluid, is circulated from the liquid metal storage tank at 278°C (533°F) to the first stage discharging heat exchanger (preheater/boiler), cooled to 245°C (473°F) and directed to the spray chamber within the first stage large salt (PCM) storage tank. Within the spray chamber the liquid metal, Pb/Bi, is directed downward while the liquid salt is directed upward. The difference in density as well as the respective flow rates results in the salt being solidified and eventually being transported out of the spray chamber into the main tank. The liquid metal, Pb/Bi, is heated from 245°C (473°F) to 278°C (533°F) and flows back to the liquid metal storage tank. The 2-stage storage system temperature profile is shown on Figure 3-18.

3.4.11.2 Thermal Storage Design Data

The conceptual design data for the direct contact (latent) heat exchanger - PCM 2-stage storage system for 1, 6 and 15 hours of storage is shown in Tables 3-34, 3-35, and 3-36, respectively.

3.4.11.3 Discussion

The direct contact heat exchanger concept is economically feasible at long durations of storage (i.e., greater than 12 hours) At the 15 hour storage time of the storage systems investigated, only the underground pressurized water concept was less expensive on an evaluated basis.

A-8,80,037

WATER/STEAM RECEIVER (POWER) STORAGE SYSTEM
GRUMMAN DIRECT CONTACT HX
LATENT SALT ("THERMKEEP") 1ST STAGE
SENSIBLE ("THERMKEEP") 2ND STAGE

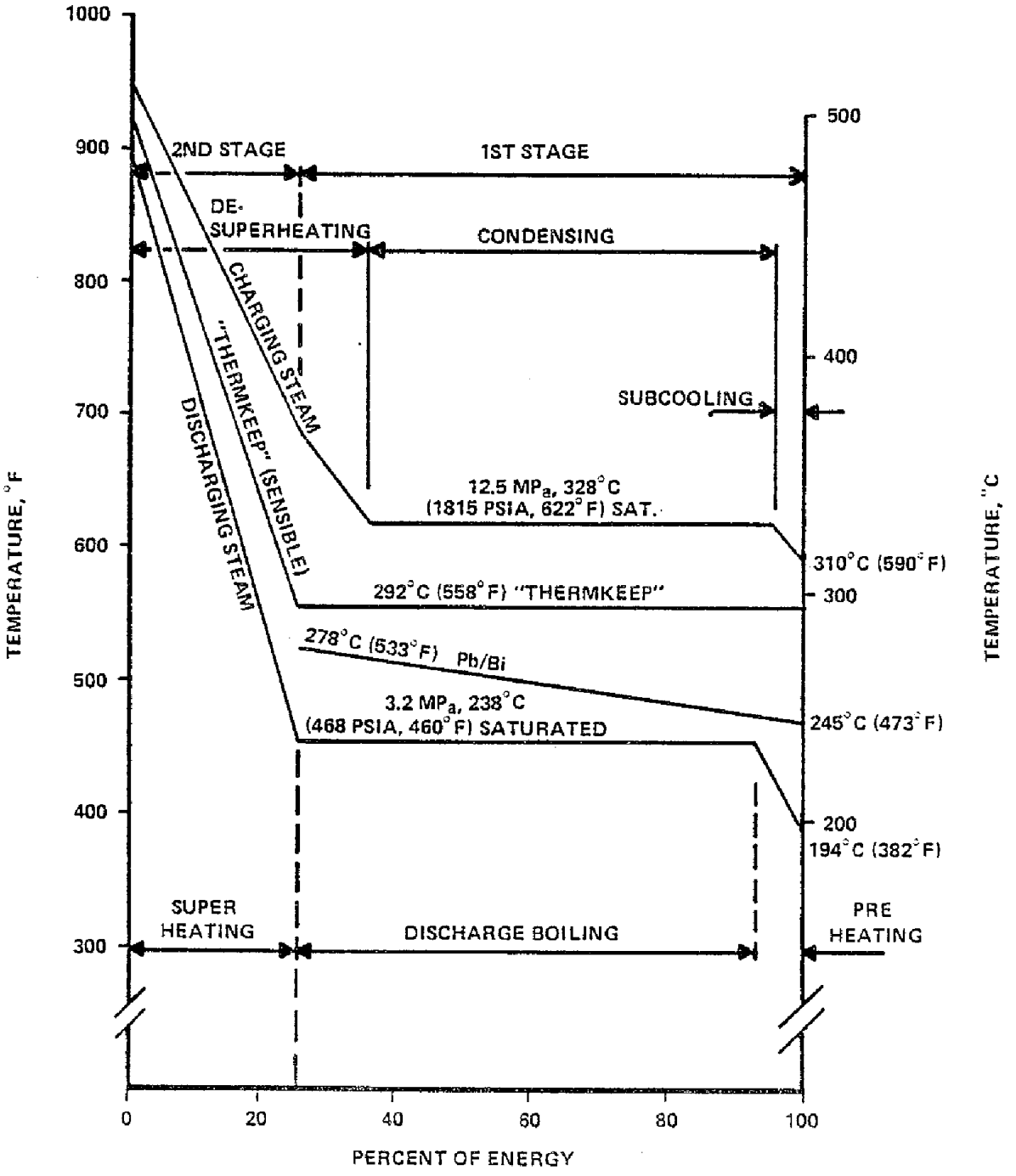

Figure 3–18. TEMPERATURE PROFILE
DIRECT CONTACT HX - PCM

Table 3-34. THERMAL STORAGE DESIGN DATA
WATER/STEAM RECEIVER - POWER
DIRECT CONTACT HX - PCM

HOURS OF STORAGE: One (1)

		STAGE 1 OF 2
		Direct Contact HX (Latent)
STORAGE MEDIA		
1. Operating Temperature		
a. Hot	°C (°F)	292 (558)
b. Cold	°C (°F)	292 (558)
2. Quantity (Total)		
a. Pb/Bi Eutectic	kg (ton)	1.322×10^6 (1,454)
b. "THERMKEEP" Salt ($NaOH$, $NaNO_3$, MnO_2)	kg (ton)	2.21×10^6 (2,432.3)

ENERGY RELATED EQUIPMENT

1. Storage Capacity	MW_th	171		
2. Storage Tanks		Main Salt Tank	Liquid Salt Tank	Pb/Bi Tank
a. Quantity		One (1)	One (1)	One (1)
b. Size, each (Dia.xHt.)	m(ft)	15.24 (50) x 9.1 (30)	4.6 (15) x 2.4(8)	8.5 (28) x 1.8 (5)
c. Material		Carbon Steel	Carbon Steel	Carbon Steel
d. Weight, each	kg (ton)	40,055 (44.06)	3,385 (3.724)	8,155 (8.97)
3. Tank Insulation				
a. Type		Mineral Fiber w/Al. Lag.	Mineral Fiber w/Al. Lag.	
b. Thickness	m (ft)	0.13 (0.417)	0.13 (0.417)	0.13 (0.417)
4. Tank Foundation				
a. Type		Concrete Mat	Concrete Mat	Concrete Mat
b. Thickness	m (ft)	0.61(2)Insul+1.52(5)Struct	0.61(2)Insul +0.91(3)Struct	0.61(2)Insul +1.22(4)Struct
c. Quantity, Total	$m^3(yd^3)$	389 (509)	69.5 (90.9)	104.6 (136.8)

POWER RELATED EQUIPMENT

		Charging	Discharging	
1. Steam				
a. Flow, Total	kg/s (lb/hr)	21.55 (0.171×10^6)	86.65 (0.6877×10^6)	
b. Pressure	MPa (psia)	12.5 (1,815)	3.2 (468)	
c. Temperature	°C (°F)	366 (691)	238 (460)	
2. Storage Fluid		Salt	Salt	Pb/Bi (Carrier Fluid)
a. Flow, Total	kg/s (lb/hr)	539.3 (4.28×10^6)	540.7 (4.291×10^6)	35,141 (278.9×10^6)
b. Pressure (Tanks)	MPa (psia)	Atmospheric	Atmospheric	Atmospheric
c. Temperature (Pump)	°C (°F)	292 (558)	292 (558)	278 (533)
3. Pumps				
a. Quantity		2-50%	2-50%	4-25%
b. Type		Vert. Cantilever	Vert. Cantilever	Vert. Cantilever
c. Material		Carbon Steel	Carbon Steel	Carbon Steel
d. Fluid		Salt	Salt	Pb/Bi
e. Capacity, each	m^3/s (gpm)	0.15 (2,361)	0.15 (2,368)	0.84 (13,375)
f. Head	m (ft)	47.2 (155)	47.2 (155)	11.4 (37.5)
g. Power (Shaft), each	kWe (hp)	166 (223)	167 (224)	1310 (1,756)
h. Motor size	kWe (hp)	187 (250)	187 (250)	1865 (2,500)
4. Heat Exchangers				
a. Quantity		1-100%	4-25%	
b. Type		Shell & Tube	Drum Type	
c. Material		Carbon Steel	Carbon Steel	
d. Surface Area, Total	$m^2(ft^2)$	1,666 (17,936)	3,106 (33,428)	
e. Duty, Total	MW_t	32.5	171	

ANNUAL ENERGY

1. Electrical Energy	10^6kWeh	1.023[a]	0.135	2.124
2. Electrical Energy(Per Stg)	10^6kWeh		3.282[a]	0.0715
3. Heat Loss (Per Stg)	10^9J(10^9BTU)	2,817 (2.67)		

Notes:
[a]Annual Electrical Energy (Charging) Includes Charging Heater Drain Pump Power (1st Stage). See Appendix B for Charging Heater Drain Pump Design Data.

Table 3-34. THERMAL STORAGE DESIGN DATA (Continued)
WATER/STEAM RECEIVER - POWER
DIRECT CONTACT HX - PCM

HOURS OF STORAGE: One (1)

		STAGE 2 OF 2	
		PCM Salt (Sensible)	
STORAGE MEDIA			
1. Operating Temperature			
a. Hot	°C (°F)	496 (925)	
b. Cold	°C (°F)	292 (558)	
2. Quantity (Total)			
a. "THERMKEEP" Salt	kg (ton)	Charged to First Stage	
ENERGY RELATED EQUIPMENT			
1. Storage Capacity	$MW_t h$	53	
2. Storage Tanks		Hot Tank	Cold Tank
a. Quantity		One (1)	
b. Size, each (Dia.xHt.)	m(ft)	8.38 (27.5) x 5.18 (17)	Part of 1st Stage
c. Material		Chrome-Moly	
d. Weight, each	kg (ton)	12,318 (13.55)	
3. Tank Insulation			
a. Type		Mineral Fiber w/Al. Lag.	
b. Thickness	m (ft)	0.254 (0.833)	
4. Tank Foundation			
a. Type		Concrete Mat	
b. Thickness	m (ft)	0.61 (2) Insul +1.52 (5) Struct	
c. Quantity, Total	$m^3(yd^3)$	117.8 (154)	

		Charging	Discharging
POWER RELATED EQUIPMENT			
1. Steam			
a. Flow, Total	kg/s (lb/hr)	21.55 (0.171 x 10^6)	86.65 (0.6877 x 10^6)
b. Pressure	MPa (psia)	12.5 (1,815)	3.1 (443)
c. Temperature	°C (°F)	510 (950)	482 (900)
2. Storage Fluid			
a. Flow, Total	kg/s (lb/hr)	23.4 (0.1855 x 10^6)	124.6 (0.989 x 10^6)
b. Pressure (Tanks)	MPa (psia)	Atmospheric	Atmospheric
c. Temperature (Pump)	°C (°F)	292 (558)	496 (925)
3. Pumps			
a. Quantity		2-50%	2-50%
b. Type		Vertical Cantilever	Vertical Cantilever
c. Material		Carbon Steel	304 SS
d. Fluid		Salt	Salt
e. Capacity, each	m^3/s (gpm)	6.4 x 10^{-3} (102.5)	0.036 (576)
f. Head	m (ft)	8.8 x 10^{-3} (139)	46.3 (152)
g. Power (Shaft), each	kWe (hp)	6.1 (8.15)	35.4 (47.4)
h. Motor size	kWe (hp)	7.5 (10)	37.3 (50)
4. Heat Exchangers			
a. Quantity		1-100%	2-50%
b. Type		Shell & Tube	Shell & Tube
c. Material		Chrome-Moly	Chrome-Moly
d. Surface Area, Total	$m^2(ft^2)$	317 (3,417)	2,044 (22,000)
e. Duty, Total	MW_t	10	53
ANNUAL ENERGY			
1. Electrical Energy	10^6kWeh	0.026	0.029
2. Electrical Energy(Per Stg)	10^6kWeh	0.055	
3. Heat Loss (Per Stg)	10^9J(10^9BTU)	778 (0.737)	

Table 3-35. THERMAL STORAGE DESIGN DATA
WATER/STEAM RECEIVER - POWER
DIRECT CONTACT HX - PCM

HOURS OF STORAGE: Six (6)

		STAGE 1 OF 2
		Direct Contact HX (Latent)
STORAGE MEDIA		
1. Operating Temperature		
a. Hot	°C (°F)	292 (558)
b. Cold	°C (°F)	292 (558)
2. Quantity (Total)		
a. Pb/Bi Eutectic	kg (ton)	1.322×10^6 (1,454)
b. "THERMKEEP" Salt ($NaOH$, $NaNO_3$, MnO_2)	kg (ton)	13.27×10^6 (14,596)

ENERGY RELATED EQUIPMENT				
1. Storage Capacity	MW_eh	1,026		
2. Storage Tanks		Main Salt Tank	Liquid Salt Tank	Pb/Bi Tank
a. Quantity		Four (4)	Four (4)	Four (4)
b. Size, each (Dia.xHt.)	m(ft)	17.1 (56) x 10.4 (34)	4.9 (16) x 3.05 (10)	4.3 (14) x 1.8 (6)
c. Material		Carbon Steel	Carbon Steel	Carbon Steel
d. Weight, each	kg (ton)	53,818 (59.2)	4,182 (4.6)	2,636 (2.9)
3. Tank Insulation				
a. Type		Mineral Fiber w/Al. Lag.	Mineral Fiber w/Al. Lag.	
b. Thickness	m (ft)	0.13 (0.417)	0.13 (0.417)	0.13 (0.417)
4. Tank Foundation				
a. Type		Concrete Mat	Concrete Mat	Concrete Mat
b. Thickness	m (ft)	0.61(2)Insul+1.52(5)Struct	0.61(2)Insul +0.91(3)Struct	0.61(2)Insul +1.22(4)Struct
c. Quantity, Total	$m^3(yd^3)$	1,954 (2,556)	535 (700)	122 (159.6)

		Charging	Discharging	
POWER RELATED EQUIPMENT				
1. Steam				
a. Flow, Total	kg/s (lb/hr)	129.4 (1.027×10^6)	86.65 (0.6877×10^6)	
b. Pressure	MPa (psia)	12.5 (1,815)	3.2 (468)	
c. Temperature	°C (°F)	366 (691)	238 (460)	
2. Storage Fluid		Salt	Salt	Pb/Bi (Carrier Fluid)
a. Flow, Total	kg/s (lb/hr)	3,236 (25.68×10^6)	540.7 (4.291×10^6)	35,141 (278.9 x 10^6)
b. Pressure (Tanks)	MPa (psia)	Atmospheric	Atmospheric	Atmospheric
c. Temperature (Pump)	°C (°F)	292 (558)	292 (558)	278 (533)
3. Pumps				
a. Quantity		4-25%	4-25%	4-25%
b. Type		Vert. Cantilever	Vert. Cantilever	Vert. Cantilever
c. Material		Carbon Steel	Carbon Steel	Carbon Steel
d. Fluid		Salt	Salt	Pb/Bi
e. Capacity, each	m^3/s (gpm)	0.45 (7,083)	0.075 (1,184)	0.84 (13,375)
f. Head	m (ft)	47.2 (155)	47.2 (155)	12.65 (41.5)
g. Power (Shaft), each	kWe (hp)	500 (670)	84 (112)	1,449 (1,943)
h. Motor size	kWe (hp)	560 (750)	93 (125)	1,865 (2,500)
4. Heat Exchangers				
a. Quantity		4-25%	4-25%	
b. Type		Shell & Tube	Drum Type	
c. Material		Carbon Steel	Carbon Steel	
d. Surface Area, Total	$m^2(ft^2)$	9,998 (107,616)	3,106 (33,428)	
e. Duty, Total	MW_t	195	171	

ANNUAL ENERGY				
1. Electrical Energy	10^6kWeh	6.311[a]	0.813	14.112
2. Electrical Energy(Per Stg)	10^6kWeh	21.236[a]		
3. Heat Loss (Per Stg)	10^9J(10^9BTU)	12,839 (12.17)		

Notes:
[a]Annual Electrical Energy (Charging) Includes Charging Heater Drain Pump Power (1st Stage). See Appendix D for Charging Heater Drain Pump Design Data.

Table 3-35. THERMAL STORAGE DESIGN DATA (Continued)
WATER/STEAM RECEIVER - POWER
DIRECT CONTACT HX - PCM

HOURS OF STORAGE: Six (6)

		STAGE 2 OF 2	
		PCM Salt (Sensible)	
STORAGE MEDIA			
1. Operating Temperature			
a. Hot	°C (°F)	496 (925)	
b. Cold	°C (°F)	292 (558)	
2. Quantity (Total)			
a. "THERMKEEP" Salt	kg (ton)	Charged to First Stage	
ENERGY RELATED EQUIPMENT			
1. Storage Capacity	$MW_t h$	318	
2. Storage Tanks		Hot Tank	Cold Tank
a. Quantity		One (1)	
b. Size, each (Dia.xHt.)	m(ft)	15.2 (50) x 9.1 (30)	Part of 1st Stage
c. Material		Chrome-Moly	
d. Weight, each	kg (ton)	61,818 (68)	
3. Tank Insulation			
a. Type		Mineral Fiber w/Al. Lag.	
b. Thickness	m (ft)	0.254 (0.833)	
4. Tank Foundation			
a. Type		Concrete Mat	
b. Thickness	m (ft)	1.22 (4) Insul. +1.52 (5) Struct.	
c. Quantity, Total	$m^3(yd^3)$	500.8 (655)	

		Charging	Discharging
POWER RELATED EQUIPMENT			
1. Steam			
a. Flow, Total	kg/s (lb/hr)	129.4 (1.027 x 10^6)	86.65 (0.6877 x 10^6)
b. Pressure	MPa (psia)	12.5 (1,815)	3.1 (443)
c. Temperature	°C (°F)	510 (950)	482 (900)
2. Storage Fluid			
a. Flow, Total	kg/s (lb/hr)	140.2 (1.113 x 10^6)	124.6 (0.989 x 10^6)
b. Pressure (Tanks)	MPa (psia)	Atmospheric	Atmospheric
c. Temperature (Pump)	°C (°F)	292 (558)	496 (925)
3. Pumps			
a. Quantity		2-50%	2-50%
b. Type		Vertical Cantilever	Vertical Cantilever
c. Material		Carbon Steel	304 SS
d. Fluid		Salt	Salt
e. Capacity, each	m^3/s (gpm)	0.039 (615)	0.036 (576)
f. Head	m (ft)	46.3 (152)	46.3 (152)
g. Power (Shaft), each	kWe (hp)	44.35 (53.5)	35.4 (47.4)
h. Motor size	kWe (hp)	49.7 (60)	37.3 (50)
4. Heat Exchangers			
a. Quantity		2-50%	2-50%
b. Type		Shell & Tube	Shell & Tube
c. Material		Chrome-Moly	Chrome-Moly
d. Surface Area, Total	$m^2(ft^2)$	1,905 (20,500)	2,044 (22,000)
e. Duty, Total	MW_t	60	52
ANNUAL ENERGY			
1. Electrical Energy	10^6kWeh	0.171	0.172
2. Electrical Energy(Per Stg)	10^6kWeh	0.343	
3. Heat Loss (Per Stg)	$10^9J(10^9BTU)$	2,520 (2.389)	

Sheet 1 of 2

Table 3-36. THERMAL STORAGE DESIGN DATA
WATER/STEAM RECEIVER - POWER
DIRECT CONTACT HX - PCM

HOURS OF STORAGE: Fifteen (15)

		STAGE 1 OF 2
		Direct Contact HX (Latent)
STORAGE MEDIA		
1. Operating Temperature		
a. Hot	°C (°F)	292 (558)
b. Cold	°C (°F)	292 (558)
2. Quantity (Total)		
a. Pb/Bi Eutectic	kg (ton)	1.322×10^6 (1,454)
b. "THERMKEEP" Salt ($NaOH$, $NaNO_3$, MnO_2)	kg (ton)	32.91×10^6 (36,205)
ENERGY RELATED EQUIPMENT		
1. Storage Capacity	$MW_e h$	2,565

		Main Salt Tank	Liquid Salk Tank	Pb/Bi Tank
2. Storage Tanks				
a. Quantity		Four (4)	Four (4)	Four (4)
b. Size, each (Dia.xHt.)	m(ft)	26.8 (88) x 10.4 (34)	6.1 (20) x 3.7 (12)	4.3 (14) x 1.8 (6)
c. Material		Carbon Steel	Carbon Steel	Carbon Steel
d. Weight, each	kg (ton)	117,909 (129.7)	5,973 (6.57)	2,636 (2.9)
3. Tank Insulation				
a. Type		Mineral Fiber w/Al. Lag.	Mineral Fiber w/Al. Lag.	
b. Thickness	m (ft)	0.13 (0.417)	0.13 (0.417)	0.13 (0.417)
4. Tank Foundation				
a. Type		Concrete Mat	Concrete Mat	Concrete Mat
b. Thickness	m (ft)	0.61(2)Insul+1.52(5)Struct	0.61(2)Insul +0.91(3)Struct	0.61(2)Insul +1.22(4)Struct
c. Quantity, Total	$m^3(yd^3)$	4,823 (6,308)	511 (668.8)	122 (159.6)

		Charging		Discharging
POWER RELATED EQUIPMENT				
1. Steam				
a. Flow, Total	kg/s (lb/hr)	241.2 (1.914×10^6)		86.65 (0.6877×10^6)
b. Pressure	MPa (psia)	12.5 (1,815)		3.2 (468)
c. Temperature	°C (°F)	366 (691)		238 (460)
2. Storage Fluid		Salt	Salt	Pb/Bi (Carrier Fluid)
a. Flow, Total	kg/s (lb/hr)	6,030 (47.86×10^6)	540.7 (4.291×10^6)	35,141 (278.9×10^6)
b. Pressure (Tanks)	MPa (psia)	Atmospheric	Atmospheric	Atmospheric
c. Temperature (Pump)	°C (°F)	292 (558)	292 (558)	278 (533)
3. Pumps				
a. Quantity		4-25%	4-25%	4-25%
b. Type		Vert. Cantilever	Vert. Cantilever	Vert. Cantilever
c. Material		Carbon Steel	Carbon Steel	Carbon Steel
d. Fluid		Salt	Salt	Pb/Bi
e. Capacity, each	m^3/s (gpm)	0.83 (13,199)	0.075 (1,184)	0.84 (13,375)
f. Head	m (ft)	47.2 (155)	47.2 (155)	12.65 (41.5)
g. Power (Shaft), each	kWe (hp)	932 (1,249)	84 (112)	1,449 (1,943)
h. Motor size	kWe (hp)	1,119 (1,500)	93 (125)	1,865 (2,500)
4. Heat Exchangers				
a. Quantity		4-25%	4-25%	
b. Type		Shell & Tube	Drum Type	
c. Material		Carbon Steel	Carbon Steel	
d. Surface Area, Total	$m^2(ft^2)$	18,631 (200,544)	3,106 (33,428)	
e. Duty, Total	MW_t	363.4	171	
ANNUAL ENERGY				
1. Electrical Energy	10^6kWeh	16.134[a]	2.033	35.28
2. Electrical Energy(Per Stg)	10^6kWeh	33.467[a]		
3. Heat Loss (Per Stg)	10^9J(10^9BTU)	23,083 (21.88)		

Notes:
[a]Annual Electrical Energy (Charging) Includes Charging Heater Drain Pump Power (1st Stage). See Appendix D for Charging Heater Drain Pump Design Data.

Table 3-36. THERMAL STORAGE DESIGN DATA (Continued)
WATER/STEAM RECEIVER - POWER
DIRECT CONTACT HX - PCM

HOURS OF STORAGE: Fifteen (15)

		STAGE 2 OF 2	
		PCM Salt (Sensible)	
STORAGE MEDIA			
1. Operating Temperature			
a. Hot	°C (°F)	496 (925)	
b. Cold	°C (°F)	292 (558)	
2. Quantity (Total)			
a. "THERMKEEP" Salt	kg (ton)	Charged to First Stage	
ENERGY RELATED EQUIPMENT			
1. Storage Capacity	$MW_t h$	795	
2. Storage Tanks		Hot Tank	Cold Tank
a. Quantity		One (1)	
b. Size, each (Dia.xHt.)	m(ft)	24.1 (79) x 9.1 (30)	Part of 1st Stage
c. Material		Chrome-Moly	
d. Weight, each	kg (ton)	117,909 (129.7)	
3. Tank Insulation			
a. Type		Mineral Fiber w/Al. Lag.	
b. Thickness	m (ft)	0.254 (0.833)	
4. Tank Foundation			
a. Type		Concrete Mat	
b. Thickness	m (ft)	1.22 (4) Insul. +1.52 (5) Struct.	
c. Quantity, Total	$m^3(yd^3)$	1,249 (1,634)	

		Charging	Discharging
POWER RELATED EQUIPMENT			
1. Steam			
a. Flow, Total	kg/s (lb/hr)	241.2 (1.914 x 10^6)	86.65 (0.6877 x 10^6)
b. Pressure	MPa (psia)	12.5 (1,815)	3.1 (443)
c. Temperature	°C (°F)	510 (950)	482 (900)
2. Storage Fluid			
a. Flow, Total	kg/s (lb/hr)	261.3 (2.074 x 10^6)	124.6 (0.989 x 10^6)
b. Pressure (Tanks)	MPa (psia)	Atmospheric	Atmospheric
c. Temperature (Pump)	°C (°F)	292 (558)	496 (925)
3. Pumps			
a. Quantity		2-50%	2-50%
b. Type		Vertical Cantilever	Vertical Cantilever
c. Material		Carbon Steel	304 SS
d. Fluid		Salt	Salt
e. Capacity, each	m^3/s (gpm)	0.072 (1,146)	0.036 (576)
f. Head	m (ft)	46.3 (152)	46.3 (152)
g. Power (Shaft), each	kWe (hp)	82.64 (99.7)	35.4 (47.4)
h. Motor size	kWe (hp)	103.6 (125)	37.3 (50)
4. Heat Exchangers			
a. Quantity		2-50%	2-50%
b. Type		Shell & Tube	Shell & Tube
c. Material		Chrome-Moly	Chrome-Moly
d. Surface Area, Total	$m^2(ft^2)$	2,549 (38,198)	2,044 (22,000)
e. Duty, Total	MW_t	111.8	52
ANNUAL ENERGY			
1. Electrical Energy	10^6kWeh	0.427	0.430
2. Electrical Energy(Per Stg)	10^6kWeh	0.857	
3. Heat Loss (Per Stg)	10^9J(10^9BTU)	4,779 (4.53)	

This direct contact heat exchanger principle shows promise but has not yet been tested by Grumman although the test rig is essentially complete. Several potential pitfalls are evident, including the carry-over of Pb/Bi metal into the salt storage container or the carry-under of salt into the Pb/Bi storage container. For this reason the O&M costs have been assumed to be higher than normal for this storage concept. The testing by Grumman is designed to determine the optimum mixing chamber including height, salt spray droplet size, and relative flow rates of salt and carrier fluid, Pb/Bi. The present design of Grumman direct contact HX testing includes the use of the chloride salt eutectic ($MgCl_2$, NaCl, KCl) and therefore the compatability of "Thermkeep" salt used in this application and the Pb/Bi liquid metal would need to be evaluated.

3.5 WATER/STEAM RECEIVER (PROCESS HEAT)

3.5.1 Reference Solar Thermal System

The reference solar thermal system for the water/steam receiver process heat application is shown in Figure 3-19. The reference cycle has receiver steam conditions of 12.5 MPa (1815 psia) and 328°C (622°F) saturated. Process steam conditions are 7.2 MPa (1045 psia) and 288°C (550°C) saturated. Condensate returned from process was assumed to be deaerated at 104°C (220°F) at the inlet of the receiver feedwater pump.

3.5.2 Thermal Storage Concepts

The final thermal storage concepts considered for the water/steam receiver (process heat) conceptual designs include the following:

- Caloria/Granite Thermocline (Reference System)
- Underground Pressurized Water
- Oil/Rock Thermocline in Excavated Concrete Pit
- Latent Heat Storage Utilizing Containerized Salt

3.5.3 Caloria/Granite Thermocline (Reference System)

3.5.3.1 System Description

The flow diagram for the reference Caloria/granite thermocline storage concept is shown in Figure 3-20. The storage media temperature ranges from 291°C (555°F) to 316°C (600°F), resulting in a relatively small storage delta-T of 25°C (45°F). The temperature profile for the reference water/steam process heat storage system is shown in Figure 3-21. The system configuration and operation is identical to the reference first-stage Caloria/granite thermocline storage system in the water/steam receiver electric power application described in Section 3.4.3.

3.5.3.2 Thermal Storage Design Data

The conceptual design data for the reference Caloria/granite thermocline storage concept as shown in Tables 3-37, 3-38, and 3-39 for 1, 6 and 15 hours storage, respectively.

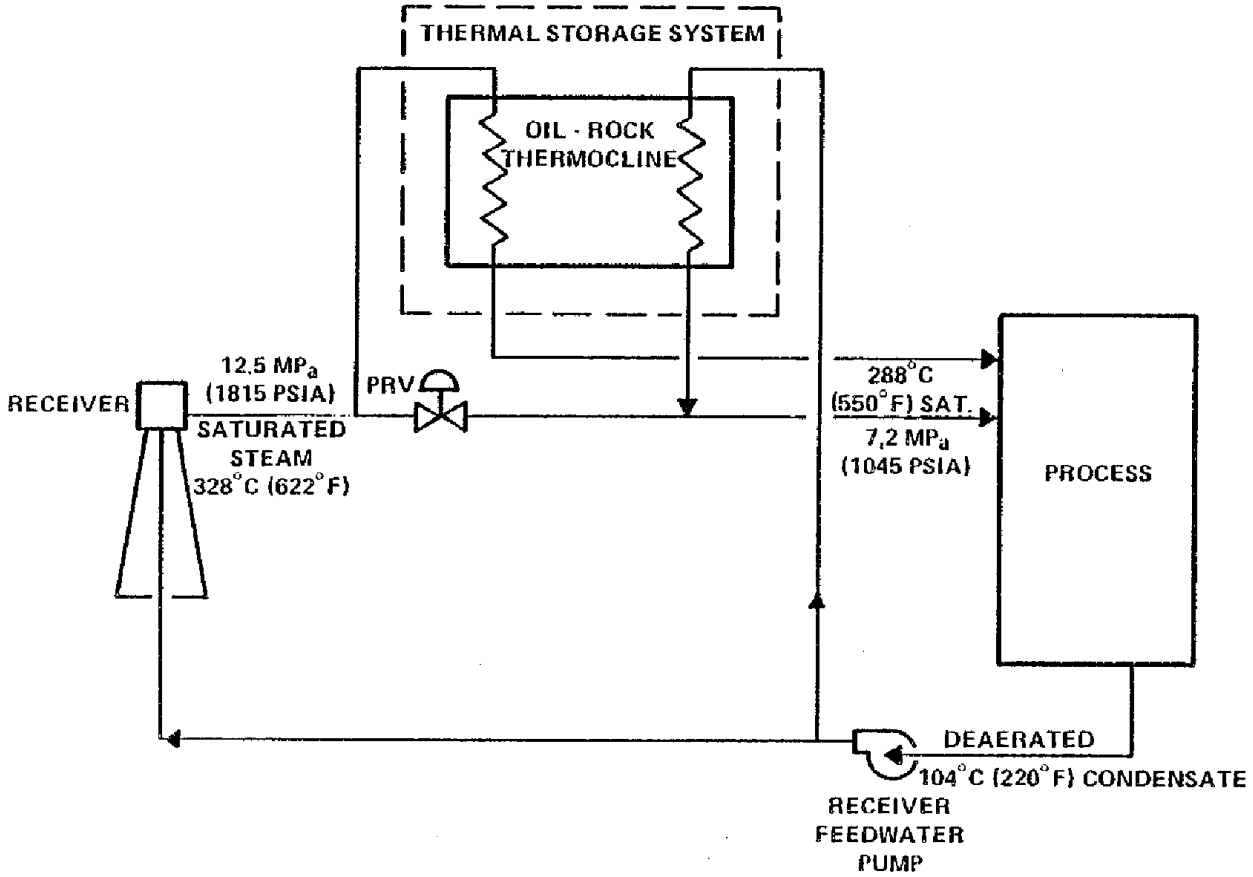

Figure 3–19. REFERENCE WATER/STEAM PROCESS HEAT CYCLE

WATER/STEAM RECEIVER (PROCESS)
CALORIA/GRANITE THERMOCLINE
STORAGE SYSTEM
(REFERENCE SYSTEM)

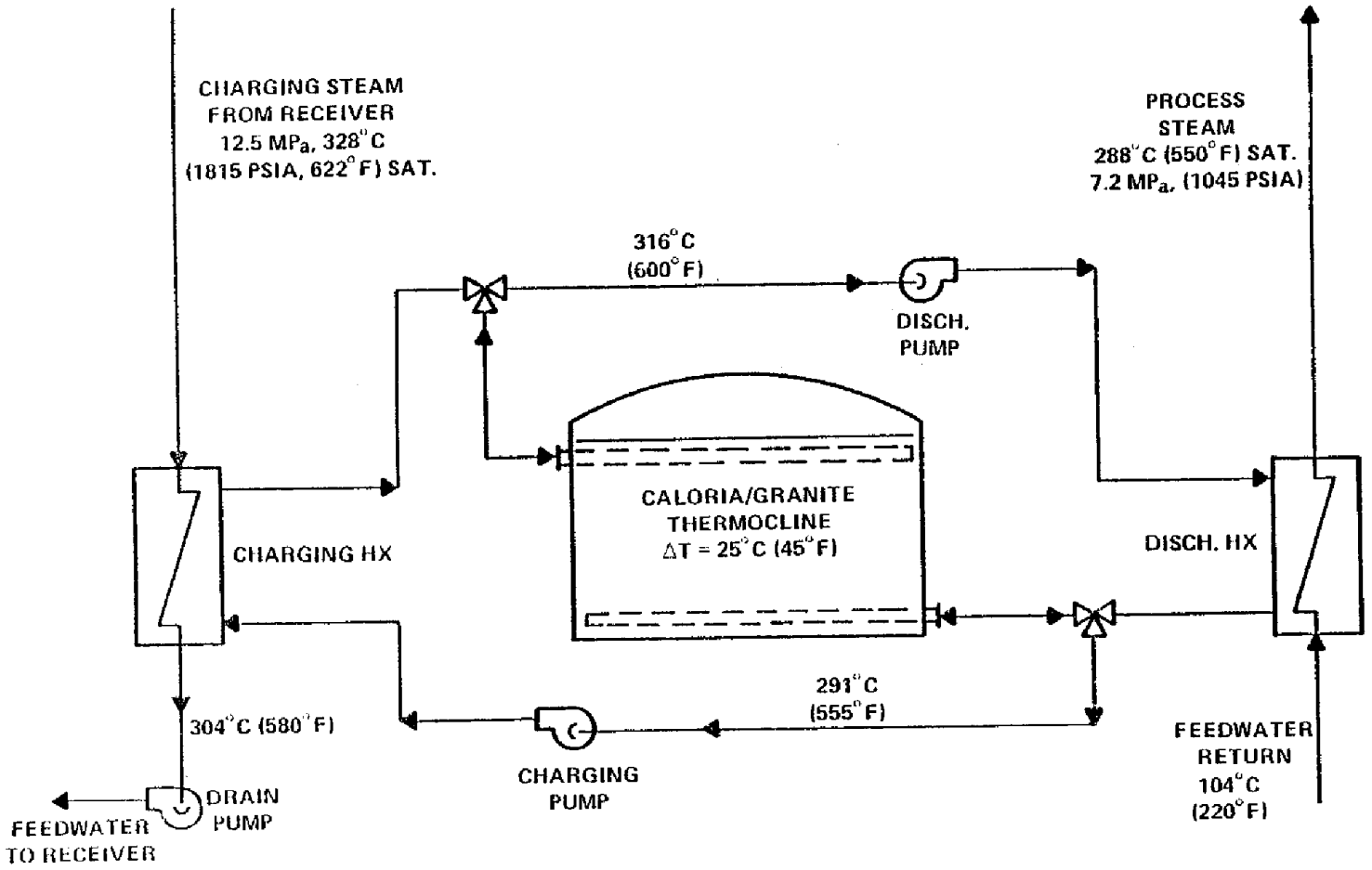

Figure 3–20. THERMAL STORAGE SYSTEM
CALORIA/GRANITE (REFERENCE SYSTEM)

WATER/STEAM RECEIVER (PROCESS) CALORIA/GRANITE THERMOCLINE STORAGE SYSTEM

NOTE: ALSO APPLICABLE FOR:
CALORIA/GRANITE THERMOCLINE - CONCRETE PIT

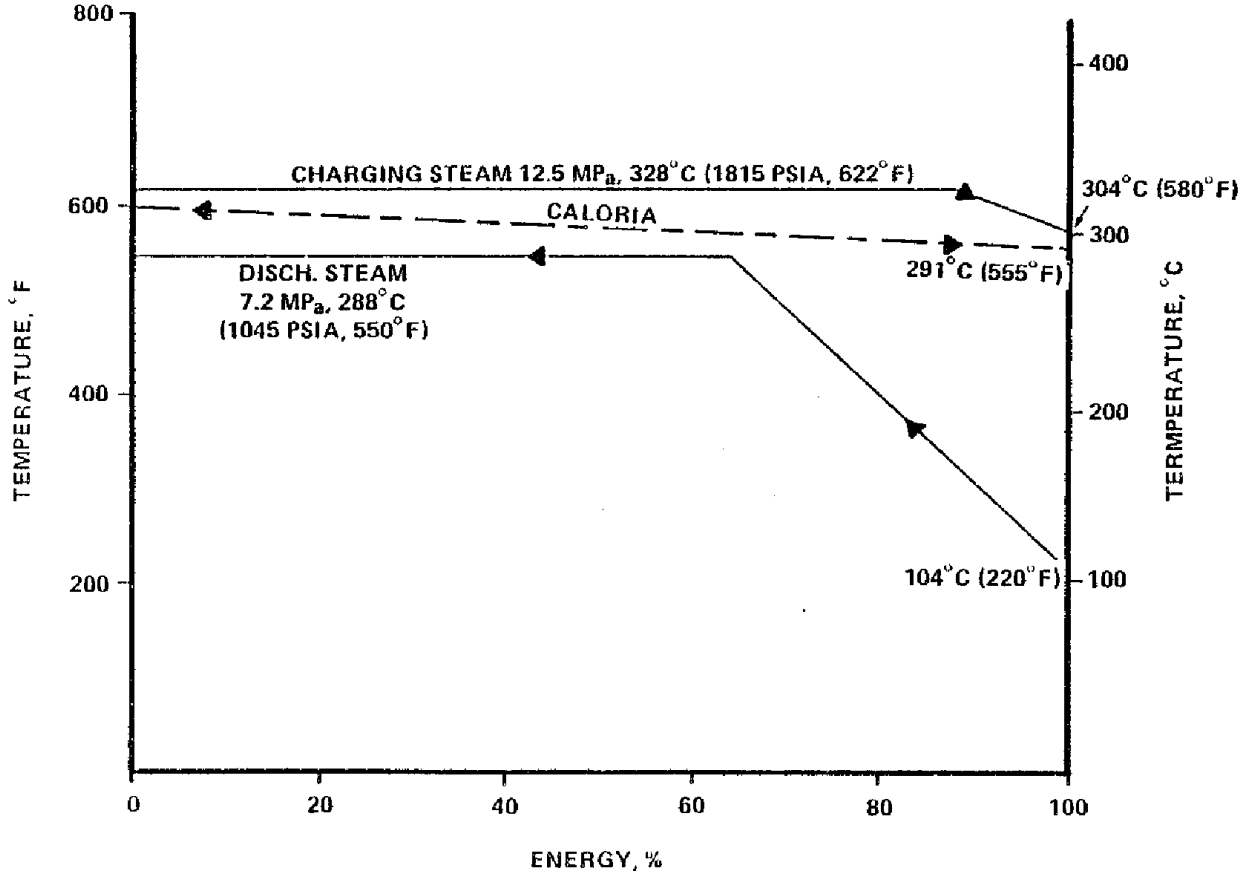

Figure 3-21. TEMPERATURE PROFILE
CALORIA/GRANITE THERMOCLINE (REFERENCE SYSTEM)

Table 3-37. THERMAL STORAGE DESIGN DATA
WATER/STEAM RECEIVER - PROCESS HEAT
CALORIA/GRANITE THERMOCLINE (REFERENCE SYSTEM)

HOURS OF STORAGE: One (1)

		STAGE 1 OF 1 Caloria/Granite Thermocline
STORAGE MEDIA		
1. Operating Temperature		
a. Hot	°C (°F)	316 (600)
b. Cold	°C (°F)	291 (555)
2. Quantity (Total)		
a. Oil, Caloria	kg (ton)	3.11×10^6 (3,429)
b. Granite	kg (ton)	26.41×10^6 (29,108)
ENERGY RELATED EQUIPMENT		
1. Storage Capacity	MW_th	224
2. Storage Tanks		
a. Quantity		Two (2)
b. Size, each (Dia.xHt.)	m(ft)	31.4 (103) x 10.7 (35)
c. Material		Carbon Steel
d. Weight, each	kg (ton)	296,652 (327)
3. Tank Insulation		
a. Type		Mineral Fiber w/Al.Lagging
b. Thickness	m (ft)	0.3 (1)
4. Tank Foundation		
a. Type		Concrete Mat
b. Thickness	m (ft)	0.61 (2) Insul. + 1.52 (5) Struct.
c. Quantity, Total	$m^3(yd^3)$	3,368 (4,404)

		Charging	Discharging
POWER RELATED EQUIPMENT			
1. Steam			
a. Flow, Total	kg/s (lb/hr)	32 (257,232)	96 (764,100)
b. Pressure	MPa (psia)	12.5 (1,815)	7.2 (1,045)
c. Temperature	°C (°F)	328 (622)	288 (550)
2. Storage Fluid			
a. Flow, Total	kg/s (lb/hr)	588 (4.67×10^6)	3,102 (24.62×10^6)
b. Pressure (Tanks)	MPa (psia)	Atmospheric	Atmospheric
c. Temperature (Pump)	°C (°F)	316 (600)	291 (555)
3. Pumps			
a. Quantity		Three (3) -33-1/3%	Fifteen (15) - 6-2/3%
b. Type		Horiz. Centrif.	Horiz. Centrif.
c. Material		Carbon Steel	Carbon Steel
d. Fluid		Caloria	Caloria
e. Capacity, each	m^3/s (gpm)	0.315 (5,000)	0.315 (5,000)
f. Head	m (ft)	30.5 (100)	41.1 (135)
g. Power (Shaft), each	kWe (hp)	77.6 (104)	105 (141)
h. Motor size	kWe (hp)	93 (125)	112 (150)
4. Heat Exchangers			
a. Quantity		Two (2)-50%	Two (2)-50%
b. Type		Shell & Tube	Drum Type Boiler
c. Material		Carbon Steel	Carbon Steel
d. Surface Area, Total	$m^2(ft^2)$	2,479 (26,680)	11,566 (124,500)
e. Duty, Total	MW_t	42.5	224
ANNUAL ENERGY			
1. Electrical Energy	10^6kWeh	1.0[a]	0.639
2. Electrical Energy(Total)	10^6kWeh	1.639[a]	
3. Heat Loss (Total)	10^9J(10^9BTU)	6.536 (6.195)	

Notes:
[a]Annual Electrical Energy (Charging) Includes Charging Heater Drain Pump Power. See Appendix D for Charging Heater Drain Pump Design Data.

Table 3-38. THERMAL STORAGE DESIGN DATA
WATER/STEAM RECEIVER - PROCESS HEAT
CALORIA/GRANITE THERMOCLINE (REFERENCE SYSTEM)

HOURS OF STORAGE: Six (6)

		STAGE 1 OF 1
		Caloria/Granite Thermocline
STORAGE MEDIA		
1. Operating Temperature		
a. Hot	°C (°F)	316 (600)
b. Cold	°C (°F)	291 (555)
2. Quantity (Total)		
a. Oil, Caloria	kg (ton)	1.87×10^7 (20,570)
b. Granite	kg (ton)	1.58×10^8 (174,660)
ENERGY RELATED EQUIPMENT		
1. Storage Capacity	$MW_t h$	1,344
2. Storage Tanks		
a. Quantity		Six (6)[a]
b. Size, each (Dia.xHt.)	m(ft)	44.5 (146) x 10.7 (35)
c. Material		Carbon Steel
d. Weight, each	kg (ton)	558,800 (616)
3. Tank Insulation		
a. Type		Mineral Fiber w/Al.Lagging
b. Thickness	m (ft)	0.25 (0.83)
4. Tank Foundation		
a. Type		Concrete Mat
b. Thickness	m (ft)	0.61 (2) Insul. + 1.52 (5) Struct.
c. Quantity, Total	$m^3(yd^3)$	20,190 (26,400)

		Charging	Discharging
POWER RELATED EQUIPMENT			
1. Steam			
a. Flow, Total	kg/s (lb/hr)	194 (1,543,400)	96 (764,100)
b. Pressure	MPa (psia)	12.5 (1,815)	7.2 (1,045)
c. Temperature	°C (°F)	328 (622)	288 (550)
2. Storage Fluid			
a. Flow, Total	kg/s (lb/hr)	3,532 (28.03×10^6)	3,102 (24.62×10^6)
b. Pressure (Tanks)	MPa (psia)	Atmospheric	Atmospheric
c. Temperature (Pump)	°C (°F)	316 (600)	291 (555)
3. Pumps			
a. Quantity		Seventeen (17) -5.88%	Fifteen (15) - 6-2/3%
b. Type		Horiz. Centrif.	Horiz. Centrif.
c. Material		Carbon Steel	Carbon Steel
d. Fluid		Caloria	Caloria
e. Capacity, each	m^3/s (gpm)	0.315 (5,000)	0.315 (5,000)
f. Head	m (ft)	41.1 (135)	41.1 (135)
g. Power (Shaft), each	kWe (hp)	105 (141)	105 (141)
h. Motor size	kWe (hp)	112 (150)	112 (150)
4. Heat Exchangers			
a. Quantity		Ten (10)-10%	Ten (10)-10%
b. Type		Shell & Tube	Drum Type Boiler
c. Material		Carbon Steel	Carbon Steel
d. Surface Area, Total	$m^2(ft^2)$	14,864 (160,000)	11,566 (124,500)
e. Duty, Total	MW_t	255	224
ANNUAL ENERGY			
1. Electrical Energy	10^6kWeh	7.098[a]	3.832
2. Electrical Energy(Total)	10^6kWeh	10.931[a]	
3. Heat Loss (Total)	10^9J(10^9BTU)	40.185 (38.09)	

Notes:
[a]Annual Electrical Energy (Charging) Includes Charging Heater Drain Pump Power. See Appendix D for Charging Heater Drain Pump Design Data.

Table 3-39. THERMAL STORAGE DESIGN DATA
WATER/STEAM RECEIVER - PROCESS HEAT
CALORIA/GRANITE THERMOCLINE (REFERENCE SYSTEM)

HOURS OF STORAGE: Fifteen (15)

		STAGE 1 OF 1
		Caloria/Granite Thermocline
STORAGE MEDIA		
1. Operating Temperature		
a. Hot	°C (°F)	316 (600)
b. Cold	°C (°F)	291 (555)
2. Quantity (Total)		
a. Oil, Caloria	kg (ton)	46.66×10^6 (51,432)
b. Granite	kg (ton)	396.1×10^6 (436,640)
ENERGY RELATED EQUIPMENT		
1. Storage Capacity	$MW_t h$	3,360
2. Storage Tanks		
a. Quantity		Fifteen (15)
b. Size, each (Dia.xHt.)	m(ft)	44.5 (146) x 10.7 (35)
c. Material		Carbon Steel
d. Weight, each	kg (ton)	558,800 (616)
3. Tank Insulation		
a. Type		Mineral Fiber w/Al.Lagging
b. Thickness	[redacted] (ft)	0.25 (0.83)
4. Tank Foundation		
a. Type		Concrete Mat
b. Thickness	m (ft)	0.61 (2) Insul. + 1.5 (5) Struct.
c. Quantity, Total	$m^3(yd^3)$	50,466 (66,000)

		Charging	Discharging
POWER RELATED EQUIPMENT			
1. Steam			
a. Flow, Total	kg/s (lb/hr)	362 (2.88×10^6)	96 (764,100)
b. Pressure	MPa (psia)	12.5 (1,815)	7.2 (1,045)
c. Temperature	°C (°F)	328 (622)	288 (550)
2. Storage Fluid			
a. Flow, Total	kg/s (lb/hr)	6,580 (52.22×10^6)	3,102 (24.62×10^6)
b. Pressure (Tanks)	MPa (psia)	Atmospheric	Atmospheric
c. Temperature (Pump)	°C (°F)	316 (600)	291 (555)
3. Pumps			
a. Quantity		Thirty-two(32) 3 1/8%	Fifteen (15) - 6-2/3%
b. Type		Horiz. Centrif.	Horiz. Centrif.
c. Material		Carbon Steel	Carbon Steel
d. Fluid		Caloria	Caloria
e. Capacity, each	m^3/s (gpm)	0.315 (5,000)	0.315 (5,000)
f. Head	m (ft)	41.1 (135)	41.1 (135)
g. Power (Shaft), each	kWe (hp)	105 (141)	105 (141)
h. Motor size	kWe (hp)	131 (175)	112 (150)
4. Heat Exchangers			
a. Quantity		Sixteen(16)-6 1/4%	Ten (10)-10%
b. Type		Shell & Tube	Drum Type Boiler
c. Material		Carbon Steel	Carbon Steel
d. Surface Area, Total	$m^2(ft^2)$	27,727 (298,350)	11,566 (124,500)
e. Duty, Total	MW_t	475.2	324
ANNUAL ENERGY			
1. Electrical Energy	10^6kWeh	18.432	9.581
2. Electrical Energy(Total)	10^6kWeh	28.011[a]	
3. Heat Loss (Total)	10^9J(10^9BTU)	100.370 (95.127)	

Notes:
[a]Annual Electrical Energy (Charging) Includes Charging Heater Drain Pump Power. See Appendix D for Charging Heater Drain Pump Design Data.

3.5.3.3 Discussion

The relatively low storage delta-T for the water/steam process heat application results in large storage media inventories and large containment structures. This of course adversely affects storage media costs, including fluid degradation, and tank costs. Also the low delta-T results in high fluid pumping costs and high heat exchanger costs. The problems relating to oil/rock thermocline storage systems were discussed in Section 3.4.3 and apply equally here.

3.5.4 Underground Pressurized Water Storage

3.5.4.1 System Description

The underground pressurized water concept using a steel-lined cavity, after Dooley [12], is shown in Figure 3-22. The concept is the same as used in the water/steam power case except for cavity size and operating pressures. The cavity pressure varies from 11.9 MPa (1725 psia) to 7.6 MPa (1100 psia), with corresponding saturation temperatures of 324°C (615°F) to 291°C (556°F). Approximately 18.5% of the fully charged water inventory is flashed to steam during the discharge cycle. In order to achieve a mass and energy balance between charging and discharging it is required to remove a small quantity (approximately 3.5% of the receiver steam charging flow) of water from storage during charging.

3.5.4.2 Thermal Storage Design Data

The conceptual design data for the underground pressurized water storage concept for process heat for 1, 6 and 15 hours of storage is shown in Tables 3-40, 3-41, and 3-42, respectively.

3.5.4.3 Discussion

Underground pressurized water storage in steel-lined caverns for the process heat application appears to be the most cost effective storage concept considered. However, the technical and cost uncertainties associated with this concept remain to be resolved, as discussed under the water/steam power case in Section 3.4.6.

3.5.5 Caloria/Granite Thermocline in Excavated Concrete Pit

3.5.5.1 System Description

In this concept, a concrete pit is used as an alternate containment for the reference Caloria/granite thermocline storage concept, as shown in Figure 3-23. The pit construction assumes 0.76m (2.5 ft.) of insulating concrete backed by structural concrete varying in thickness from 0.30m (1.0 ft.) to 0.76m (2.5 ft.) on the vertical walls (depending on depth of pit) and 0.15m (0.5 ft.) on the floor. The roof consists of insulated corrugated metal supported by a system of bar joists, columns and beams. Also the top of the berm surrounding the pit is provided with a 9.1m (30 ft.) insulating concrete slab 0.30m (1 ft.) thick to minimize heat loss.

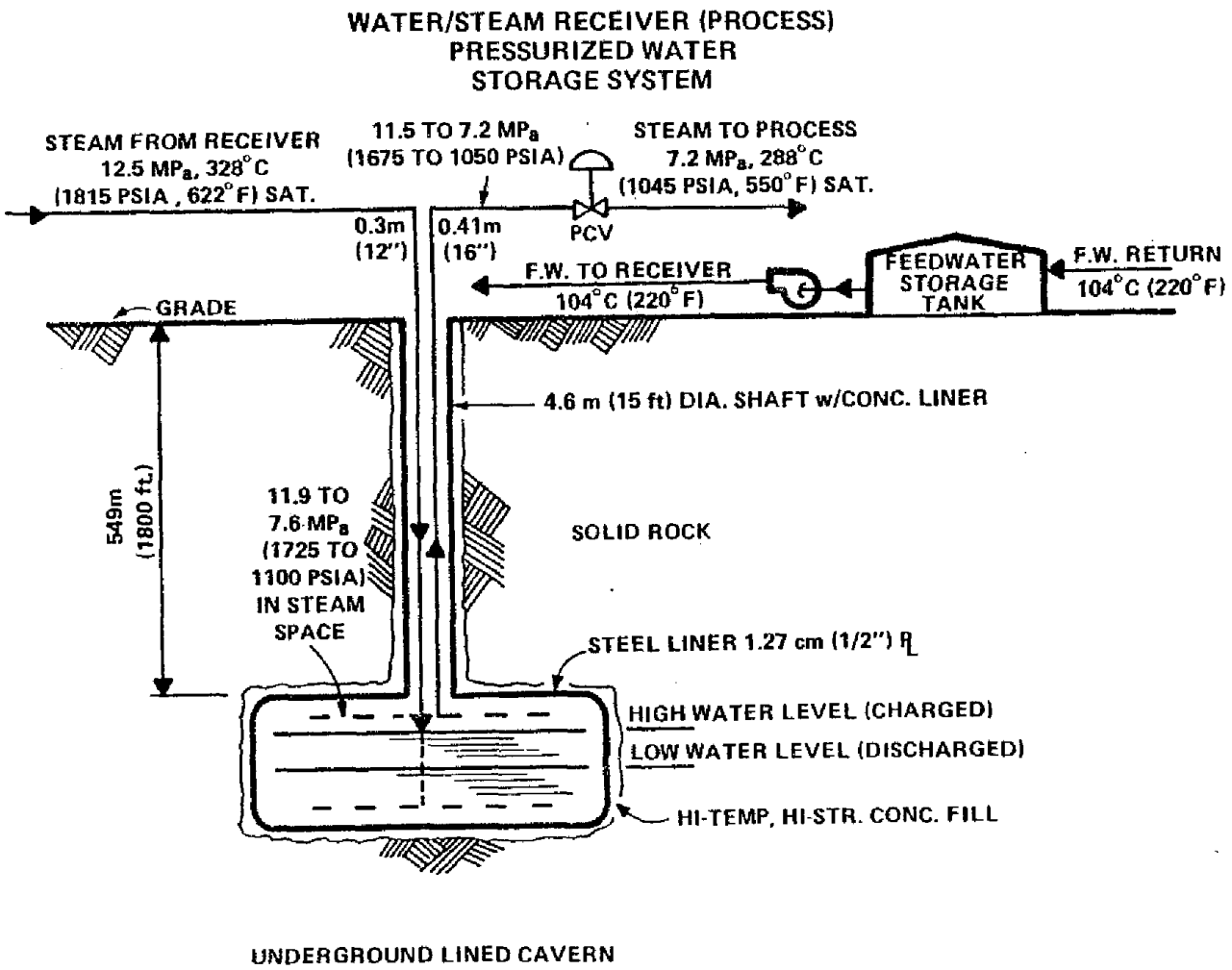

Figure 3-22. THERMAL STORAGE SYSTEM
UNDERGROUND PRESSURIZED WATER

Table 3-40. THERMAL STORAGE DESIGN DATA
WATER/STEAM RECEIVER - PROCESS HEAT
UNDERGROUND PRESSURIZED WATER

HOURS OF STORAGE: One (1)

		STAGE 1 OF 1	
		Pressurized Water	Steel-Lined Cavern
STORAGE MEDIA			
1. Operating Temperature			
a. Hot	°C (°F)	324 (615)	
b. Cold	°C (°F)	291 (556)	
2. Quantity (Total)			
a. Water	kg (ton)	1.87×10^6 (2,063)	
ENERGY RELATED EQUIPMENT			
1. Storage Capacity	$MW_e h$	224	
2. Storage Tanks		Underground Cavern	Condensate Storage Tank
a. Quantity		One (1)	One (1)
b. Size, each (Dia.xHt.)	m(ft)	25.3 (83) x 6.1 (20)	10.7(35)x4.9(16)
c. Material		Excavated Rock, Stl. Lined	Carbon Steel
d. Weight, each	kg (ton)		25,039 (27.6)
3. Tank Insulation			
a. Type		None	None
b. Thickness	m (ft)		
4. Tank Foundation			
a. Type		None	Not Included
b. Thickness	m (ft)		
c. Quantity, Total	$m^3(yd^3)$		

		Charging	Discharging
POWER RELATED EQUIPMENT			
1. Steam			
a. Flow, Total	kg/s (lb/hr)	19(150,395)	96(764,960)
b. Pressure	MPa (psia)	12.5 (1,815)	7.2 (1,045)
c. Temperature	°C (°F)	328 (622)	288 (550)
2. Storage Fluid			
a. Flow, Total	kg/s (lb/hr)	19 (150,395)	96(764,960)
b. Pressure (Tank)	MPa (psia)	11.9(1,725)	7.6 (1,100)
c. Temperature	°C (°F)	324 (615)	291 (556)
3. Pumps			
a. Quantity		1-100%	None
b. Type		Barrel Type	
c. Material		Carbon Steel	
d. Fluid		Condensate	
e. Capacity, each	m^3/s (gpm)	0.02 (316)	
f. Head	m (ft)	1,716(5,630)	
g. Power (Shaft), each	kWe (hp)	455 (610)	
h. Motor size	kWe (hp)	522 (700)	
4. Heat Exchangers			
a. Quantity		None	None
b. Type			
c. Material			
d. Surface Area, Total	$m^2(ft^2)$		
e. Duty, Total	MW_t		
ANNUAL ENERGY			
1. Electrical Energy	10^6kWeh	0.974	0
1. Electrical Energy(Total)	10^6kWeh	0.974	
1. Heat Loss (Total)	10^9J(10^9BTU)	1,782 (1.689)	

Table 3-41. THERMAL STORAGE DESIGN DATA
WATER/STEAM RECEIVER - PROCESS HEAT
UNDERGROUND PRESSURIZED WATER

HOURS OF STORAGE: Six (6)

		STAGE 1 OF 1	
		Pressurized Water - Steel-Lined Cavern	
STORAGE MEDIA			
1. Operating Temperature			
a. Hot	°C (°F)	324 (615)	
b. Cold	°C (°F)	291 (556)	
2. Quantity (Total)			
a. Water	kg (ton)	11.24×10^6 (12,385)	
ENERGY RELATED EQUIPMENT			
1. Storage Capacity	$MW_t h$	1,344	53
2. Storage Tanks		Underground Cavern	Condensate Storage Tank
a. Quantity		One (1)	One (1)
b. Size, each (Dia.xHt.)	m(ft)	44.2 (145) x12.2 (40)	18.3(60)x9.4(31)
c. Material		Excavated Rock, Stl.-Lined	Carbon Steel
d. Weight, each	kg (ton)		78,470 (86.5)
3. Tank Insulation			
a. Type		None	None
b. Thickness	m (ft)		
4. Tank Foundation			
a. Type		None	Not Included
b. Thickness	m (ft)		
c. Quantity, Total	$m^3(yd^3)$		

		Charging	Discharging
POWER RELATED EQUIPMENT			
1. Steam			
a. Flow, Total	kg/s (lb/hr)	114(902,370)	96(764,960)
b. Pressure	MPa (psia)	12.5 (1,815)	7.2 (1,045)
c. Temperature	°C (°F)	328 (622)	288 (550)
2. Storage Fluid			
a. Flow, Total	kg/s (lb/hr)	114 (902,370)	96 (764,960)
b. Pressure (Tank)	MPa (psia)	11.9 (1,725)	7.6 (1,100)
c. Temperature	°C (°F)	324 (615)	291 (556)
3. Pumps			
a. Quantity		2-50%	None
b. Type		Barrel Type	
c. Material		Carbon Steel	
d. Fluid		Condensate	
e. Capacity, each	m^3/s (gpm)	0.06 (950)	
f. Head	m (ft)	1,798(5,900)	
g. Power (Shaft), each	kWe (hp)	1,433 (1,921)	
h. Motor size	kWe (hp)	1,492 (2,000)	
4. Heat Exchangers			
a. Quantity		None	None
b. Type			
c. Material			
d. Surface Area, Total	$m^2(ft^2)$		
e. Duty, Total	MW_t		
ANNUAL ENERGY			
1. Electrical Energy	10^6kWeh	6,125	0
2. Electrical Energy(Total)	10^6kWeh	6,125	
3. Heat Loss (Total)	10^9J(10^9BTU)	5,313 (5.036)	

Table 3-42. THERMAL STORAGE DESIGN DATA
WATER/STEAM RECEIVER - PROCESS HEAT
UNDERGROUND PRESSURIZED WATER

HOURS OF STORAGE: Fifteen (15)

		STAGE 1 OF 1	
		Pressurized Water	Steel-Lined Cavern
STORAGE MEDIA			
1. Operating Temperature			
a. Hot	°C (°F)	324 (615)	
b. Cold	°C (°F)	291 (556)	
2. Quantity (Total)			
a. Water	kg (ton)	28.1×10^6 (30,954)	
ENERGY RELATED EQUIPMENT			
1. Storage Capacity	MW_th	3,360	
2. Storage Tanks		Underground Cavern	Condensate Storage Tank
a. Quantity		One (1)	One (1)
b. Size, each (Dia.xHt.)	m(ft)	59.4 (195) x 16.8 (55)	24.4 (80) x 12.2 (40)
c. Material		Excavat Rock, Stl.-Lined	Carbon Steel
d. Weight, each	kg (ton)		136,805 (150.8)
3. Tank Insulation			
a. Type		None	None
b. Thickness	m (ft)		
4. Tank Foundation			
a. Type		None	Not Included
b. Thickness	m (ft)		
c. Quantity, Total	$m^3(yd^3)$		

		Charging	Discharging
POWER RELATED EQUIPMENT			
1. Steam			
a. Flow, Total	kg/s (lb/hr)	212(1.682×10^6)	96(764,960)
b. Pressure	MPa (psia)	12.5 (1,815)	7.2 (1,045)
c. Temperature	°C (°F)	328 (622)	288 (550)
2. Storage Fluid			
a. Flow, Total	kg/s (lb/hr)	212(1.682×10^6)	96(764,960)
b. Pressure (Tank)	MPa (psia)	11.9 (1,725)	7.6 (1,100)
c. Temperature	°C (°F)	324 (615)	291 (556)
3. Pumps			
a. Quantity		2-50%	None
b. Type		Barrel Type	
c. Material		Carbon Steel	
d. Fluid		Condensate	
e. Capacity, each	m^3/s (gpm)	0.11 (1,770)	
f. Head	m (ft)	1,799 (5,900)	
g. Power (Shaft), each	kWe (hp)	2,706 (3,628)	
h. Motor size	kWe (hp)	2,798 (3,750)	
4. Heat Exchangers			
a. Quantity		None	None
b. Type			
c. Material			
d. Surface Area, Total	$m^2(ft^2)$		
e. Duty, Total	MW_t		
ANNUAL ENERGY			
1. Electrical Energy	10^6kWeh	15.52	0
2. Electrical Energy(Total)	10^6kWeh	15.52	
3. Heat Loss (Total)	$10^9J(10^9BTU)$	8,952 (8.39)	

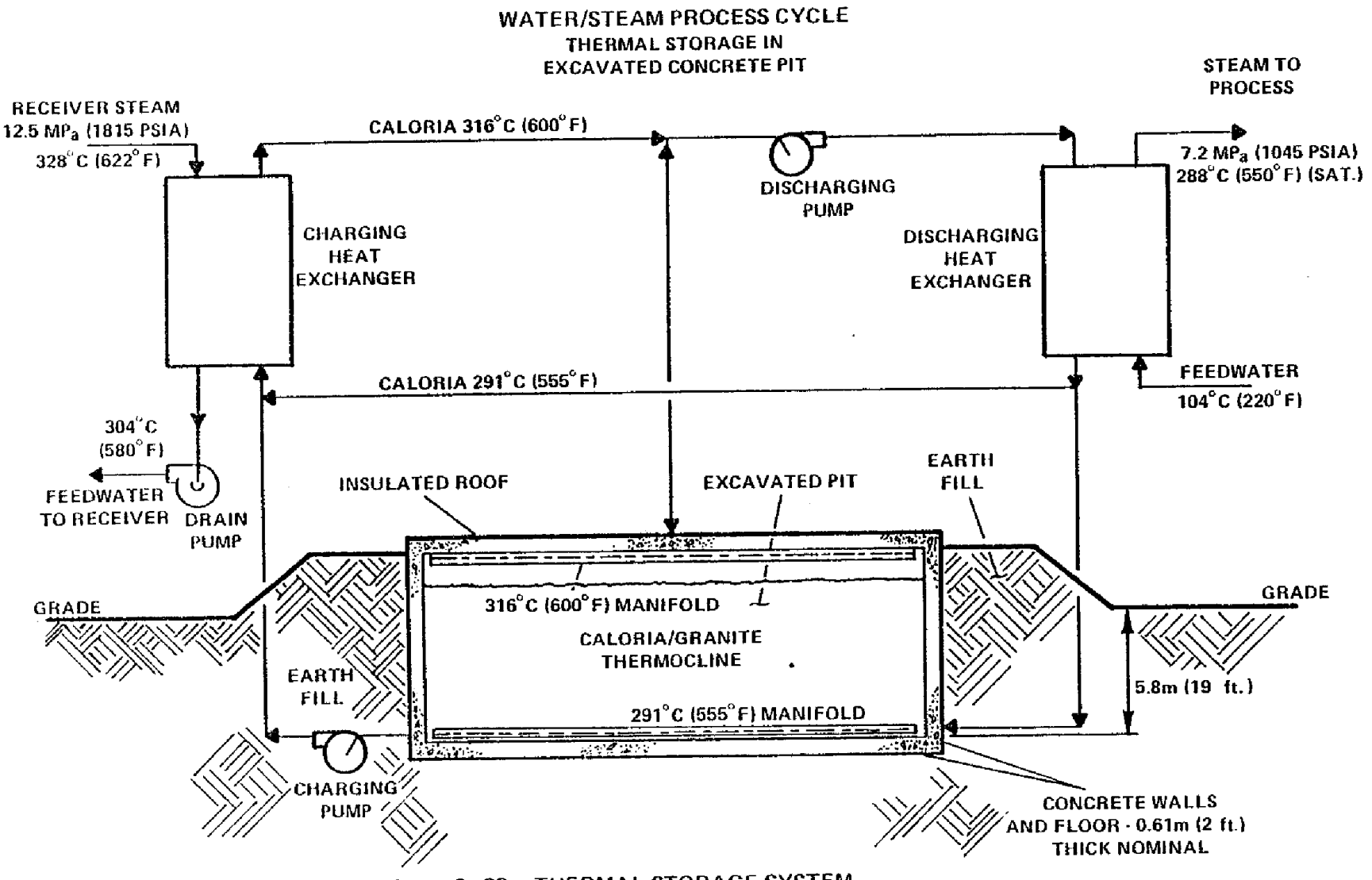

Figure 3–23. THERMAL STORAGE SYSTEM
CALORIA/GRANITE, CONCRETE-LINED PIT

3.5.5.2 Thermal Storage Design Data

The conceptual design data for the oil/rock thermocline in an excavated concrete pit is shown in Tables 3-43, 3-44, and 3-45, respectively.

3.5.5.3 Discussion

The concrete pit containment resulted in lower containment cost over the reference steel tanks for large systems. The savings in capital investment ranged from 8.2% to 17.4% for 1 to 15 hours of storage. Although the capital investment is reduced, the concrete pit containment is subject to cracking during the initial heat up-period and subsequent thermal cycling, thus posing perhaps a greater technical risk than experienced on dual-media steel tanks.

3.5.6 Containerized Salt - Boiler Tank

3.5.6.1 System Description

This is an experiment in latent storage systems with the containerized salt concept replacing the reference Caloria/granite thermocline as shown in Figure 3-24. In principle this application of the containerized salt - boiler tank is exactly the same as for the first stage water/steam power thermal storage system. The difference is in the boundary conditions, the salt and the storage size.

The boiler tank containerized salt thermal storage concept has been developed by the Naval Research Laboratory [6] for use as a phase change (i.e. latent) thermal storage system in contrast to the reference system which utilizes only the sensible heat capacity of the storage media. The Naval Research Laboratory reference 2 MWt boiler tank design uses a salt eutectic ($Mg\ Cl_2$, NaCl, KCl) and m-terphenyl as a heat transfer fluid. However, the melting point of the chloride salt is 385°C (725°F) which is too high for this process application since the charging steam temperature is only 328°C (622°F). Furthermore, the recommended salt for the water steam power application (Na_2CO_3, NaOH) has a melting point of 288°C (550°F) which is the same as the required process steam temperature and consequently won't work with "0" temperature difference. Therefore, a different alternate salt was selected with a melting temperature between 328°C (622°F) and 288°C (550°F). The selected alternate salt ($NaNO_3$ 99% by weight, NaOH 1% by weight) with a melting temperature of 310°C (590°F) was recommended by Honeywell [7].

The salt is encapsulated in mild steel cans similar to that used in the food industry. The can diameter is 0.102m (0.33 ft.) and the can height is 0.462m (1.52 ft). The cans have screw-on lids with a punched vent hole to allow pressure differential relief. Thousands of cans are placed in rows and stacked several cans high within the boiler tank.

Table 3-43. THERMAL STORAGE DESIGN DATA
WATER/STEAM RECEIVER → PROCESS HEAT
CALORIA/GRANITE THERMOCLINE (CONCRETE PIT)

HOURS OF STORAGE: One (1)

		STAGE 1 OF 1
		Caloria/Granite Thermocline
STORAGE MEDIA		
1. Operating Temperature		
a. Hot	°C (°F)	316 (600)
b. Cold	°C (°F)	291 (555)
2. Quantity (Total)		
a. Oil, Caloria	kg (ton)	3.11×10^6 (3,429)
b. Granite	kg (ton)	26.41×10^6 (29,108)
ENERGY RELATED EQUIPMENT		
1. Storage Capacity	MW_th	224
2. Storage Tanks		Concrete Pit
a. Quantity		One (1)
b. Size, each (Dia.xHt.)	m(ft)	36.6 (120) x 36.6 (120) x 11.4 (39) Bed
c. Material		Concrete-Lined Excavation with Berm
d. Weight, each	kg (ton)	N/A
3. Tank Insulation		
a. Type		Insulating Concrete (Floor & Walls) / Mineral Fiber w/Al. Lag. (Roof)
b. Thickness	m (ft)	0.76 (2.5) / 0.13 (0.417)
4. Tank Foundation		
a. Type		N/A
b. Thickness	m (ft)	
c. Quantity, Total	$m^3(yd^3)$	

		Charging	Discharging
POWER RELATED EQUIPMENT			
1. Steam			
a. Flow, Total	kg/s (lb/hr)	32 (257,233)	96 (764,100)
b. Pressure	MPa (psia)	12.5 (1,815)	7.2 (1,045)
c. Temperature	°C (°F)	328 (622)	288 (550)
2. Storage Fluid			
a. Flow, Total	kg/s (lb/hr)	588 (4.67×10^6)	3,102 (24.62×10^6)
b. Pressure (Tanks)	MPa (psia)	Atmospheric	Atmospheric
c. Temperature (Pump)	°C (°F)	316 (600)	291 (555)
3. Pumps			
a. Quantity		Three (3) -33-1/3%	Fifteen (15) - 6-2/3%
b. Type		Horiz. Centrif.	Horiz. Centrif.
c. Material		Carbon Steel	Carbon Steel
d. Fluid		Caloria	Caloria
e. Capacity, each	m^3/s (gpm)	0.315 (5,000)	0.315 (5,000)
f. Head	m (ft)	30.5 (100)	41.1 (135)
g. Power (Shaft), each	kWe (hp)	77.6 (104)	105 (141)
h. Motor size	kWe (hp)	93 (125)	112 (150)
4. Heat Exchangers			
a. Quantity		Two (2)-50%	Ten (10)-10%
b. Type		Shell & Tube	Drum Type Boiler
c. Material		Carbon Steel	Carbon Steel
d. Surface Area, Total	$m^2(ft^2)$	2,479 (26,680)	11,566 (124,500)
e. Duty, Total	MW_t	42.5	224
ANNUAL ENERGY			
1. Electrical Energy	10^6kWeh	1.0[a]	0.639
2. Electrical Energy(Total)	10^6kWeh	1.639[a]	
3. Heat Loss (Total)	10^9J(10^9BTU)	6,709 (6.359)	

Notes:
[a]Annual Electrical Energy (Charging) Includes Charging Heater Drain Pump Power. See Appendix D for Charging Heater Drain Pump Design Data.

Table 3-44. THERMAL STORAGE DESIGN DATA
WATER/STEAM RECEIVER - PROCESS HEAT
CALORIA/GRANITE THERMOCLINE (CONCRETE PIT)

HOURS OF STORAGE: Six (6)

		STAGE 1 OF 1
		Caloria/Granite Thermocline
STORAGE MEDIA		
1. Operating Temperature		
a. Hot	°C (°F)	316 (600)
b. Cold	°C (°F)	291 (555)
2. Quantity (Total)		
a. Oil, Caloria	kg (ton)	1.87×10^7 (20,570)
b. Granite	kg (ton)	1.58×10^8 (174,660)
ENERGY RELATED EQUIPMENT		
1. Storage Capacity	MW_th	1,344
2. Storage Tanks		Concrete Pits
a. Quantity		Four (4)
b. Size, each (Dia.xHt.)	m(ft)	42.4 (139) x 42.4 (139) x 13.2 (43.3) Bed
c. Material		Concrete-Lined Excavation with Berm
d. Weight, each	kg (ton)	N/A
3. Tank Insulation		
a. Type		Insulating Concrete (Floor & Walls) Mineral Fiber w/Al. Lag. (Roof)
b. Thickness	m (ft)	0.76 (2.5) 0.13 (0.417)
4. Tank Foundation		
a. Type		N/A
b. Thickness	m (ft)	
c. Quantity, Total	$m^3(yd^3)$	

		Charging	Discharging
POWER RELATED EQUIPMENT			
1. Steam			
a. Flow, Total	kg/s (lb/hr)	194 (1,543,400)	96 (764,100)
b. Pressure	MPa (psia)	12.5 (1,815)	7.2 (1,045)
c. Temperature	°C (°F)	328 (622)	288 (550)
2. Storage Fluid			
a. Flow, Total	kg/s (lb/hr)	3,532 (28.03×10^6)	3,102 (24.62×10^6)
b. Pressure (Tanks)	MPa (psia)	Atmospheric	Atmospheric
c. Temperature (Pump)	°C (°F)	316 (600)	291 (555)
3. Pumps			
a. Quantity		Seventeen (17) -5.88%	Fifteen (15) - 6-2/3%
b. Type		Horiz. Centrif.	Horiz. Centrif.
c. Material		Carbon Steel	Carbon Steel
d. Fluid		Caloria	Caloria
e. Capacity, each	m^3/s (gpm)	0.315 (5,000)	0.315 (5,000)
f. Head	m (ft)	41.1 (135)	41.1 (135)
g. Power (Shaft), each	kWe (hp)	105 (141)	105 (141)
h. Motor size	kWe (hp)	112 (150)	112 (150)
4. Heat Exchangers			
a. Quantity		Ten (10)-10%	Ten (10)-10%
b. Type		Shell & Tube	Drum Type Boiler
c. Material		Carbon Steel	Carbon Steel
d. Surface Area, Total	$m^2(ft^2)$	14,864 (160,000)	11,566 (124,500)
e. Duty, Total	MW_t	255	224
ANNUAL ENERGY			
1. Electrical Energy	10^6kWeh	7.098[a]	3.833
2. Electrical Energy(Total)	10^6kWeh	10.931[a]	
3. Heat Loss (Total)	10^9J(10^9BTU)	35,469 (33.62)	

Notes:
[a]Annual Electrical Energy (Charging) Includes Charging Heater Drain Pump Power. See Appendix D for Charging Heater Drain Pump Design Data.

Table 3-45. THERMAL STORAGE DESIGN DATA
WATER/STEAM RECEIVER - PROCESS HEAT
CALORIA/GRANITE THERMOCLINE - (CONCRETE PIT)

HOURS OF STORAGE: Fifteen (15)

		STAGE 1 OF 1 Caloria/Granite Thermocline
STORAGE MEDIA		
1. Operating Temperature		
a. Hot	°C (°F)	316 (600)
b. Cold	°C (°F)	291 (555)
2. Quantity (Total)		
a. Oil, Caloria	kg (ton)	46.66×10^6 (51,432)
b. Granite	kg (ton)	396.1×10^6 (436,640)
ENERGY RELATED EQUIPMENT		
1. Storage Capacity	$MW_t h$	3,360
2. Storage Tanks		Concrete Pits
a. Quantity		Eight (8)
b. Size, each (Dia.xHt.)	m(ft)	46.6 (153) x 46.6 (153) x 13.6 (44.6) Bed
c. Material		Concrete Lined Excavation with Berm
d. Weight, each	kg (ton)	N/A
3. Tank Insulation		
a. Type		Insulating Concrete (Floor & Walls) Mineral Fiber w/Al. Lag. (Roof)
b. Thickness	m (ft)	0.76 (2.5) 0.13 (0.417)
4. Tank Foundation		
a. Type		N/A
b. Thickness	m (ft)	
c. Quantity, Total	$m^3(yd^3)$	

		Charging	Discharging
POWER RELATED EQUIPMENT			
1. Steam			
a. Flow, Total	kg/s (lb/hr)	363 (2.88×10^6)	96 (764,100)
b. Pressure	MPa (psia)	12.5 (1,815)	7.2 (1,045)
c. Temperature	°C (°F)	328 (622)	288 (550)
2. Storage Fluid			
a. Flow, Total	kg/s (lb/hr)	6,580 (52.22×10^6)	3,102 (24.62×10^6)
b. Pressure (Tanks)	MPa (psia)	Atmospheric	Atmospheric
c. Temperature (Pump)	°C (°F)	316 (600)	291 (555)
3. Pumps			
a. Quantity		Thirty-two(32) 3 1/8%	Fifteen (15) - 6-2/3%
b. Type		Horiz. Centrif.	Horiz. Centrif.
c. Material		Carbon Steel	Carbon Steel
d. Fluid		Caloria	Caloria
e. Capacity, each	m^3/s (gpm)	0.315 (5,000)	0.315 (5,000)
f. Head	m (ft)	41.1 (135)	41.1 (135)
g. Power (Shaft), each	kWe (hp)	105 (141)	105 (141)
h. Motor size	kWe (hp)	131 (175)	112 (150)
4. Heat Exchangers			
a. Quantity		Sixteen(16)-6 1/4%	Ten (10)-10%
b. Type		Shell & Tube	Drum Type Boiler
c. Material		Carbon Steel	Carbon Steel
d. Surface Area, Total	$m^2(ft^2)$	27,727 (298,350)	11,566 (124,500)
e. Duty, Total	MW_t	475.2	224
ANNUAL ENERGY			
1. Electrical Energy	10^6kWeh	19.43[a]	9.581
2. Electrical Energy(Total)	10^6kWeh	29.011[a]	
3. Heat Loss (Total)	10^9J(10^9BTU)	85,494 (81.037)	

Notes:
[a]Annual Electrical Energy (Charging) Includes Charging Heater Drain Pump Power. See Appendix D for Charging Heater Drain Pump Design Data.

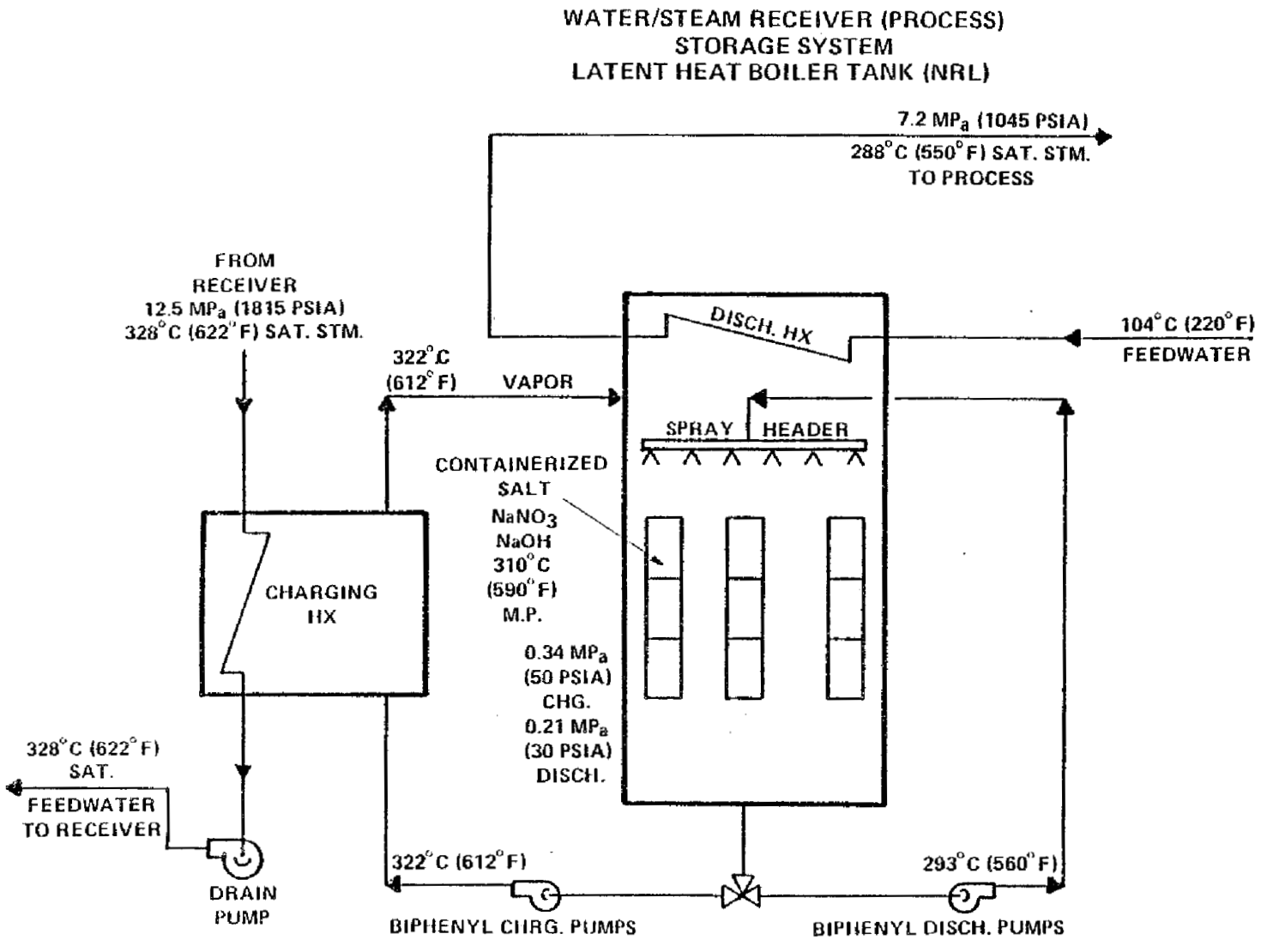

Figure 3–24. THERMAL STORAGE SYSTEM
LATENT, CONTAINERIZED SALT

The thermal energy is transmitted to the salt through the surface heat transfer area of the salt containers. In order to utilize the subject salt (melting point = 310°C (590°F) the reference drain temperature was increased from 304°C (580°F) to saturated water at 328°C (622°F) as shown on the schematic, Figure 3-24. In order to maintain the same charging energy rate to the storage system as the reference, the drain pump flow rate was increased approximately 12 1/2% over the reference system. The discharging steam flow rate, temperature and pressures are identical to the reference water/steam process storage system.

The temperature profile for the containerized salt latent storage system for the process heat application is shown in Figure 3-25.

During the charging mode liquid biphenyl oil is circulated at 322°C (612°F) from the bottom of the latent storage system (boiler tank) through the condensing charging heat exchanger where it is heated to saturated vapor at 322°C (612°F). The biphenyl vapor is then directed to the top of the pressurized (50 psia) boiler tank where it is condensed on the surface of the containerized salt. The thermal energy is subsequently transferred by conduction thru the can walls and into the salt by conduction and natural convection thereby melting the salt and utilizing the latent heat capacity of the salt for thermal storage. During the discharge mode of operation the biphenyl liquid is pumped from the bottom of the boiler tank at 293°C (560°F) thru a distribution sparger at the top of the boiler tank. The biphenyl liquid is vaporized as it flows over the hot containerized salt cans. The vaporized biphenyl is subsequently condensed within the pressurized (30 psia) boiler tank on the preheater/boiler heat exchanger tubes thereby heating the feedwater from 104°C (220°F) to saturated steam at 228°C (550°F) for process use. The condensed biphenyl then falls by gravity to the bottom of the boiler tank for recirculation.

3.5.6.2 Thermal Storage Design Data

The conceptual design data for the containerized salt boiler tank storage system for 1, 6 and 15 hours is shown in Tables 3-46, 3-47, and 3-48, respectively.

3.5.6.3 Discussion

The containerized salt - boiler tank thermal storage concept as designed in this study becomes more economically feasible for longer durations of storage time (in excess of the 1 hour case). In fact it is better than the reference cycle on an evaluated basis. However, the underground pressurized water (steel-lined cavern) is the more economical than the containerized salt for all storage times (i.e., 1 thru 15 hours) investigated. Three main technical problem areas have been identified by the Naval Research Laboratory [6] in energy storage units using containerized salts as the energy storing media. These problem areas are concerned with 1) charging 2) distribution and 3) discharging.

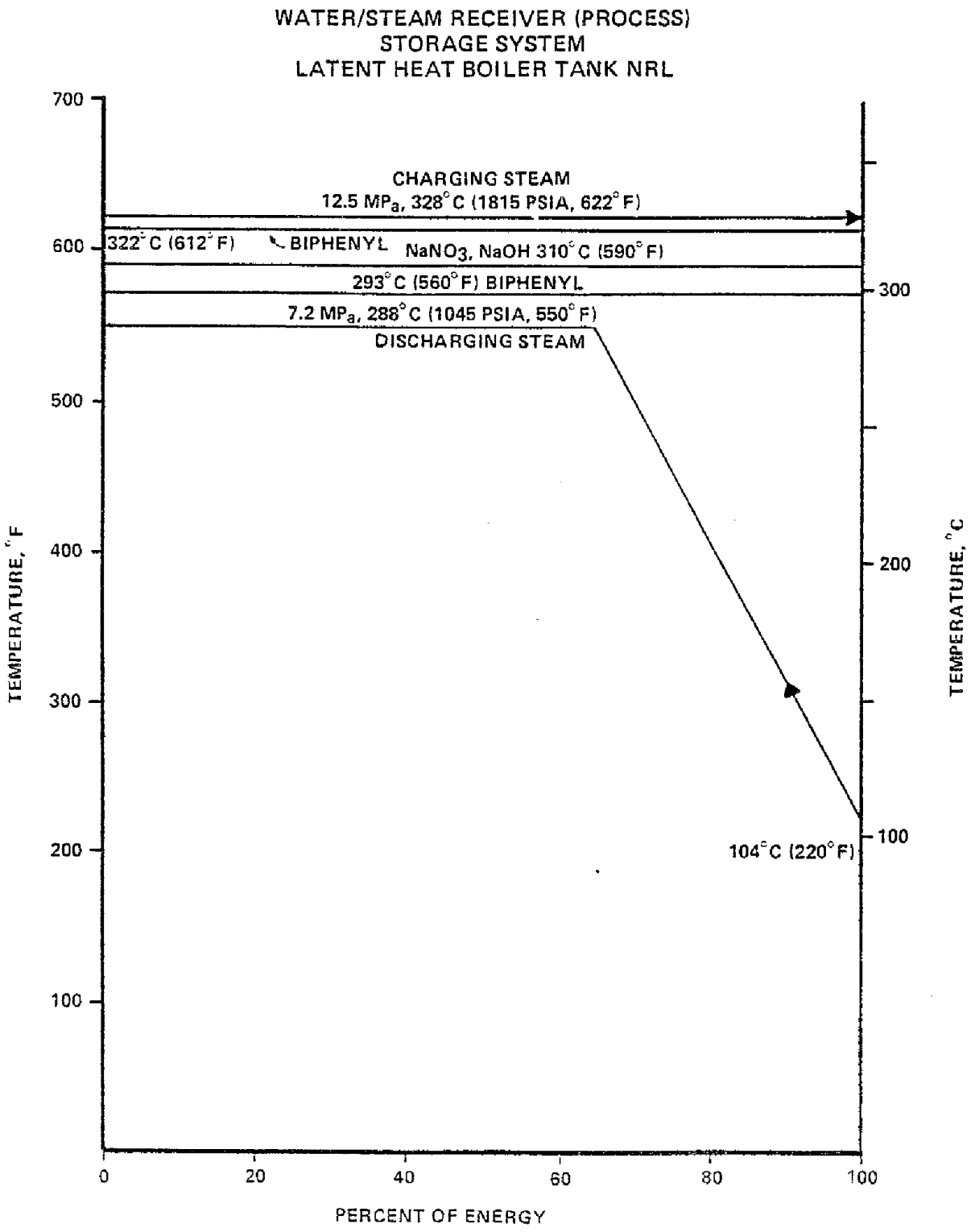

Figure 3–25. TEMPERATURE PROFILE CONTAINERIZED SALT

Table 3-46. THERMAL STORAGE DESIGN DATA
WATER/STEAM RECEIVER - PROCESS HEAT
CONTAINERIZED SALT (LATENT, BOILER TANK)

HOURS OF STORAGE: One (1)

		STAGE 1 OF 1
		Containerized Salt
STORAGE MEDIA		
1. Operating Temperature		
a. Hot	°C (°F)	310 (590)
b. Cold	°C (°F)	310 (590)
2. Quantity (Total)		
a. Oil, Biphenyl	kg (ton)	751,682 (826.85)
b. $NaNO_3$, NaOH	kg (ton)	12.96×10^6 (14,256)
ENERGY RELATED EQUIPMENT		
1. Storage Capacity	MW_th	224
2. Storage Tanks		
a. Quantity		Six (6)
b. Size, each (Dia.xHt.)	m(ft)	19.8 (65) x 11.9 (39)
c. Material		SA-516 Carbon Steel
d. Weight, each	kg (ton)	0.28×10^6 (315)
3. Tank Insulation		
a. Type		Mineral Fiber w/Al.Lagging
b. Thickness	m (ft)	0.53 (1.75)
4. Tank Foundation		
a. Type		Concrete Mat
b. Thickness	m (ft)	0.61 (2) Insul. + 1.52 (5) Struct.
c. Quantity, Total	$m^3(yd^3)$	3,946 (5,160)

		Charging		Discharging
POWER RELATED EQUIPMENT				
1. Steam				
a. Flow, Total	kg/s (lb/hr)	36.4 (0.289×10^6)		96.3 (0.7641×10^6)
b. Pressure	MPa (psia)	12.5 (1,815)		7.2 (1,045)
c. Temperature	°C (°F)	328 (622)		288 (550)
2. Storage Fluid Biphenyl		Biphenyl		
a. Flow, Total	kg/s (lb/hr)	96.1 (0.763×10^6)		507 (4.024×10^6)
b. Pressure (Tanks)	MPa (psia)	0.34 (50)		0.21 (30)
c. Temperature (Pump)	°C (°F)	322 (612)		293 (560)
3. Pumps				
a. Quantity		6-16-2/3%		6-16-2/3%
b. Type		Horiz. Centrif.		Horiz. Centrif.
c. Material		Carbon Steel		Carbon Steel
d. Fluid		Biphenyl		Biphenyl
e. Capacity, each	m^3/s (gpm)	0.021 (327)		0.105 (1,661)
f. Head	m (ft)	30.5 (100)		25.3 (83)
g. Power (Shaft), each	kWe (hp)	6.4 (8.56)		28 (37.56)
h. Motor size	kWe (hp)	7.5 (10)		29.8 (40)
4. Heat Exchangers				
a. Quantity		6-16-2/3%	1.81×10^6 Cans	6-16-2/3%
b. Type		Shell & Tube	Containers	Tubes in Boiler Tank
c. Material		Carbon Steel	Carbon Steel	Carbon Steel
d. Surface Area, Total	$m^2(ft^2)$	3,205(34,500)	0.267×10^6(2.87×10^6)	28,087(302,340)
e. Duty, Total	MW_t	42.5		224
ANNUAL ENERGY				
1. Electrical Energy	10^6kWeh	0.68[a]		0.068
2. Electrical Energy(Total)	10^6kWeh		0.748[a]	
3. Heat Loss (Total)	10^9J(10^9BTU)		6,771 (6.418)	

Notes:
[a]Annual Electrical Energy (Charging) Includes Charging Heater Drain Pump Power. See Appendix D for Charging Heater Drain Pump Design Data.

Table 3-47. THERMAL STORAGE DESIGN DATA
WATER/STEAM RECEIVER - PROCESS HEAT
CONTAINERIZED SALT (LATENT, BOILER TANK)

HOURS OF STORAGE: Six (6)

		STAGE 1 OF 1
		Containerized Salt
STORAGE MEDIA		
1. Operating Temperature		
a. Hot	°C (°F)	310 (590)
b. Cold	°C (°F)	310 (590)
2. Quantity (Total)		
a. Oil, Biphenyl	kg (ton)	2.215×10^6 (2,436)
b. $NaNO_3$, NaOH	kg (ton)	38.2×10^6 (42,005)
ENERGY RELATED EQUIPMENT		
1. Storage Capacity	MW_th	1,344
2. Storage Tanks		
a. Quantity		Sixteen (16)
b. Size, each (Dia.xHt.)	m(ft)	20.73 (68) x 10.97 (36)
c. Material		SA-516 Carbon Steel
d. Weight, each	kg (ton)	0.29×10^6 (320)
3. Tank Insulation		
a. Type		Mineral Fiber w/Al.Lagging
b. Thickness	m (ft)	0.23 (0.75)
4. Tank Foundation		
a. Type		Concrete Mat
b. Thickness	m (ft)	0.61 (2) Insul. + 1.52 (5) Struct.
c. Quantity, Total	$m^3(yd^3)$	11,520 (15,066)

		Charging		Discharging
POWER RELATED EQUIPMENT				
1. Steam				
a. Flow, Total	kg/s (lb/hr)	218.6 (1.735×10^6)		96.3 (0.7641×10^6)
b. Pressure	MPa (psia)	12.5 (1,815)		7.2 (1,045)
c. Temperature	°C (°F)	328 (622)		288 (550)
2. Storage Fluid		Biphenyl		Biphenyl
a. Flow, Total	kg/s (lb/hr)	577.1 (4.58×10^6)		507 (4.024×10^6)
b. Pressure (Tanks)	MPa (psia)	0.34 (50)		0.21 (30)
c. Temperature (Pump)	°C (°F)	322 (612)		293 (560)
3. Pumps				
a. Quantity		16-6-2/3%		16-6-2/3%
b. Type		Horiz. Cencrif.		Horiz. Cencrif.
c. Material		Carbon Steel		Carbon Steel
d. Fluid		Biphenyl		Biphenyl
e. Capacity, each	m^3/s (gpm)	0.046 (735)		0.039 (623)
f. Head	m (ft)	30.5 (100)		24.4 (80)
g. Power (Shaft), each	kWe (hp)	14.4 (19.25)		10.1 (13.58)
h. Motor size	kWe (hp)	14.9 (20)		11.2 (15)
4. Heat Exchangers				
a. Quantity		16-6-2/3%	5.333×10^6 Cans	16-6-2/3%
b. Type		Shell & Tube	Containers	Tubes in Boiler Tank
c. Material		Carbon Steel	Carbon Steel	Carbon Steel
d. Surface Area, Total	$m^2(ft^2)$	19,249(207,200)	0.787×10^6(8.47×10^6)	28,087(302,340)
e. Duty, Total	MW_t	224	224	
ANNUAL ENERGY				
1. Electrical Energy	10^6kWeh	4.4076[a]		0.394
2. Electrical Energy(Total)	10^6kWeh		4.8016[a]	
3. Heat Loss (Total)	10^9J(10^3BTU)		40,202 (38,106)	

Notes:
[a]Annual Electrical Energy (Charging) Includes Charging Heater Drain Pump Power. See Appendix D for Charging Heater Drain Pump Design Data.

Table 3-48. THERMAL STORAGE DESIGN DATA
WATER/STEAM RECEIVER - PROCESS HEAT
CONTAINERIZED SALT (LATENT, BOILER TANK)

HOURS OF STORAGE: Fifteen (15)

		STAGE 1 OF 1
		Containerized Salt
STORAGE MEDIA		
1. Operating Temperature		
a. Hot	°C (°F)	310 (590)
b. Cold	°C (°F)	310 (590)
2. Quantity (Total)		
a. Oil, Biphenyl	kg (ton)	4.26×10^6 (4,683.5)
b. $NaNO_3$, NaOH	kg (ton)	73.41×10^6 (80,750)
ENERGY RELATED EQUIPMENT		
1. Storage Capacity	$MW_t h$	3,360
2. Storage Tanks		
a. Quantity		Thirty (30)
b. Size, each (Dia.xHt.)	m(ft)	20.73 (68) x 10.97 (36)
c. Material		SA-516 Carbon Steel
d. Weight, each	kg (ton)	0.29×10^6 (320)
3. Tank Insulation		
a. Type		Mineral Fiber w/Al.Lagging
b. Thickness	m (ft)	0.178 (0.58)
4. Tank Foundation		
a. Type		Concrete Mat
b. Thickness	m (ft)	0.61 (2) Insul. + 1.52 (5) Struct.
c. Quantity, Total	$m^3(yd^3)$	21,600 (28,248)

		Charging		Discharging
POWER RELATED EQUIPMENT				
1. Steam				
a. Flow, Total	kg/s (lb/hr)	407.4 (3.233×10^6)		96.3 (0.7641×10^6)
b. Pressure	MPa (psia)	12.5 (1,815)		7.2 (1,045)
c. Temperature	°C (°F)	328 (622)		288 (550)
2. Storage Fluid		Biphenyl		Biphenyl
a. Flow, Total	kg/s (lb/hr)	1,075 (8.53×10^6)		507 (4.024×10^6)
b. Pressure (Tanks)	MPa (psia)	0.34 (50)		0.21 (30)
c. Temperature (Pump)	°C (°F)	322 (612)		293 (560)
3. Pumps				
a. Quantity		30-3-1/3%		30-3-1/3%
b. Type		Horiz. Centrif.		Horiz. Centrif.
c. Material		Carbon Steel		Carbon Steel
d. Fluid		Biphenyl		Biphenyl
e. Capacity, each	m^3/s (gpm)	0.046 (730)		0.021 (332)
f. Head	m (ft)	30.5 (100)		24.4 (80)
g. Power (Shaft), each	kWe (hp)	14.2 (19.1)		5.4 (7.24)
h. Motor size	kWe (hp)	14.9 (20)		7.5 (10)
4. Heat Exchangers				
a. Quantity		30-3-1/3%	10.253×10^6 Cans	30-3-1/3%
b. Type		Shell & Tube	Containers	Tubes in Boiler Tank
c. Material		Carbon Steel	Mild Steel	Carbon Steel
d. Surface Area, Total	$m^2(ft^2)$	35,905(386,490)	1.51×10^9(16.28×10^6)	28,087(302,340)
e. Duty, Total	MW_t	475.2	224	
ANNUAL ENERGY				
1. Electrical Energy	10^6kWeh	11.704[a]		0.985
2. Electrical Energy(Total)	10^6kWeh	12.689[a]		
3. Heat Loss (Total)	10^9J(10^9BTU)	92,118 (87.316)		

Notes:
[a]Annual Electrical Energy (Charging) Includes Charging Heater Drain Pump Power. See Appendix D for Charging Heater Drain Pump Design Data.

The first problem involves the transferring of heat from the input surfaces during charging. This problem is somewhat eliminated by using a forced flow shell and tube heat exchanger to heat the biphenyl. Furthermore, the second problem of distributing the heat uniformly is somewhat eliminated as the vapor is injected into the tank and condensing on the surface of the colder salt cans. This condensation is somewhat compensating due to the hot vapor seeking the colder surfaces. The third problem involves the removing of heat from the salt cans and delivering it to the boiler tubes. This area is potentially the largest technical problem and involves distribution spray headers, vapor flow paths, free flow area, etc.

Other potential pitfalls include the area of corrosion, namely the possibility that molten salt will attack the salt containers during their life. The Naval Research Laboratory studies indicate that corrosion is not a problem if the storage salts are thoroughly dried. The salt used in tis application has not been tested by NRL to our knowledge and therefore laboratory testing is probably required as has been done on the NRL recommended chloride salt. Although the containerized salt boiler tank concept has been demonstrated in the laboratory the full scale 2 MWt thermal storage test has not been completed at this time.

3.6 ORGANIC FLUID RECEIVER (POWER)

3.6.1 Reference Solar Thermal System

The reference solar thermal system for the organic fluid receiver power application is shown in Figure 3-26. The reference cycle is based on the Solar Total Energy-Large Scale Experiment at Shenandoah, Georgia by the General Electric Company [2]. The steam cycle is for a nominal 400 kWe non-reheat turbine with initial steam conditions of 4.93 MPa (715 psia) and 382°C (720°F). Steam for process is extracted at the H.P./L.P. turbine crossover and desuperheated to conditions of 0.83 MPa (120 psia) and 172°C (341°F).

3.6.2 Thermal Storage Concepts

The final thermal storage concepts considered for the organic fluid receiver (power) conceptual designs include the following:

- Syltherm 800/Taconite Trickle Charge (Reference System)
- Hitec Salt (2 tank)
- Direct Contact Phase Change as Two Stage System (Latent and Sensible Stages)

3.6.3 Syltherm 800/Taconite Trickle Charge - (Reference System)

3.6.3.1 System Description

A flow diagram showing the reference thermal storage system is shown in Figure 3-27. It is a trickle charge thermocline concept comprised of Syltherm 800 as the heat transfer fluid and taconite (pelletized iron ore) as the thermal storage media. The trickle charge thermocline concept was proposed by the General Electric Company as a way to minimize total

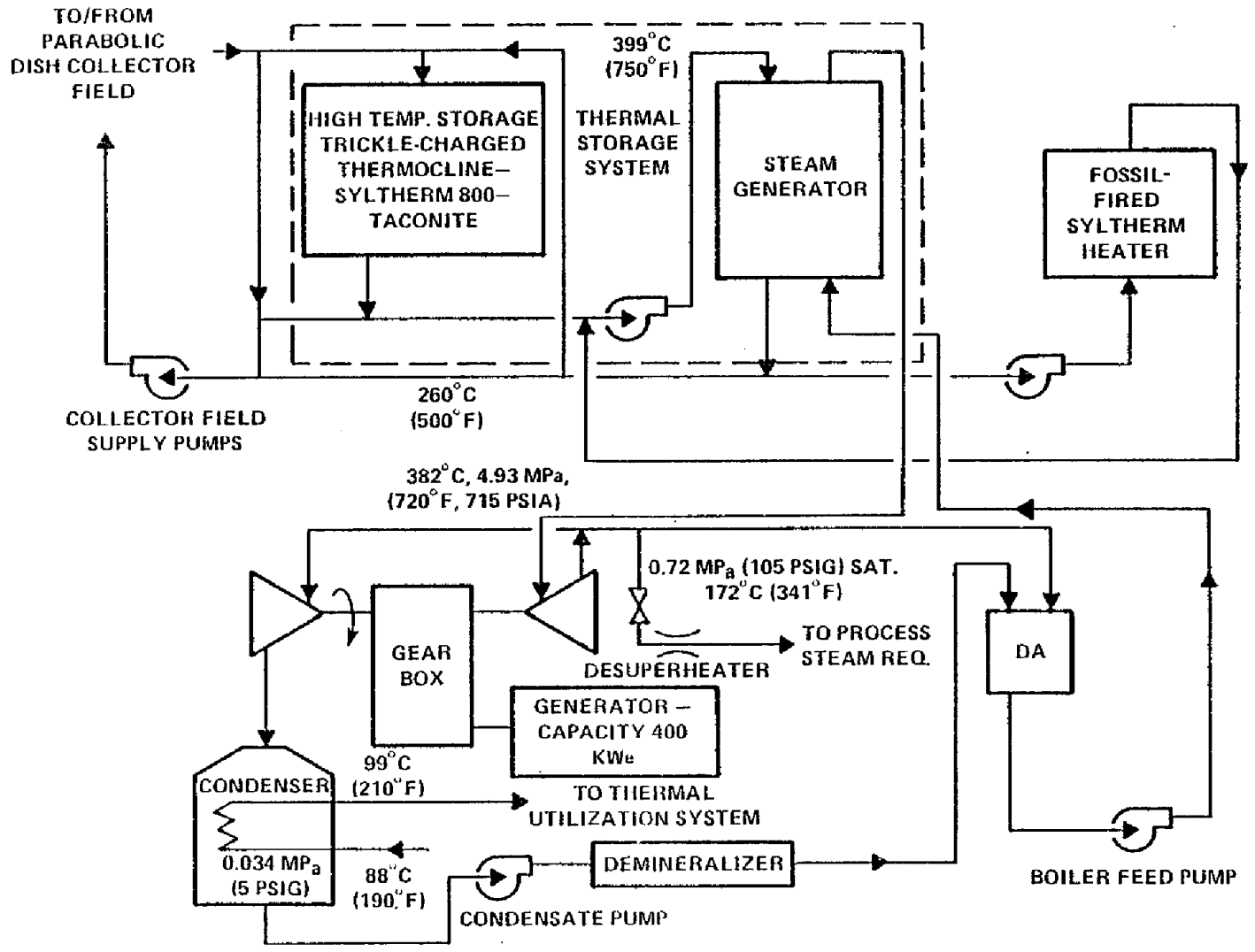

Figure 3–26. REFERENCE ORGANIC FLUID POWER CYCLE

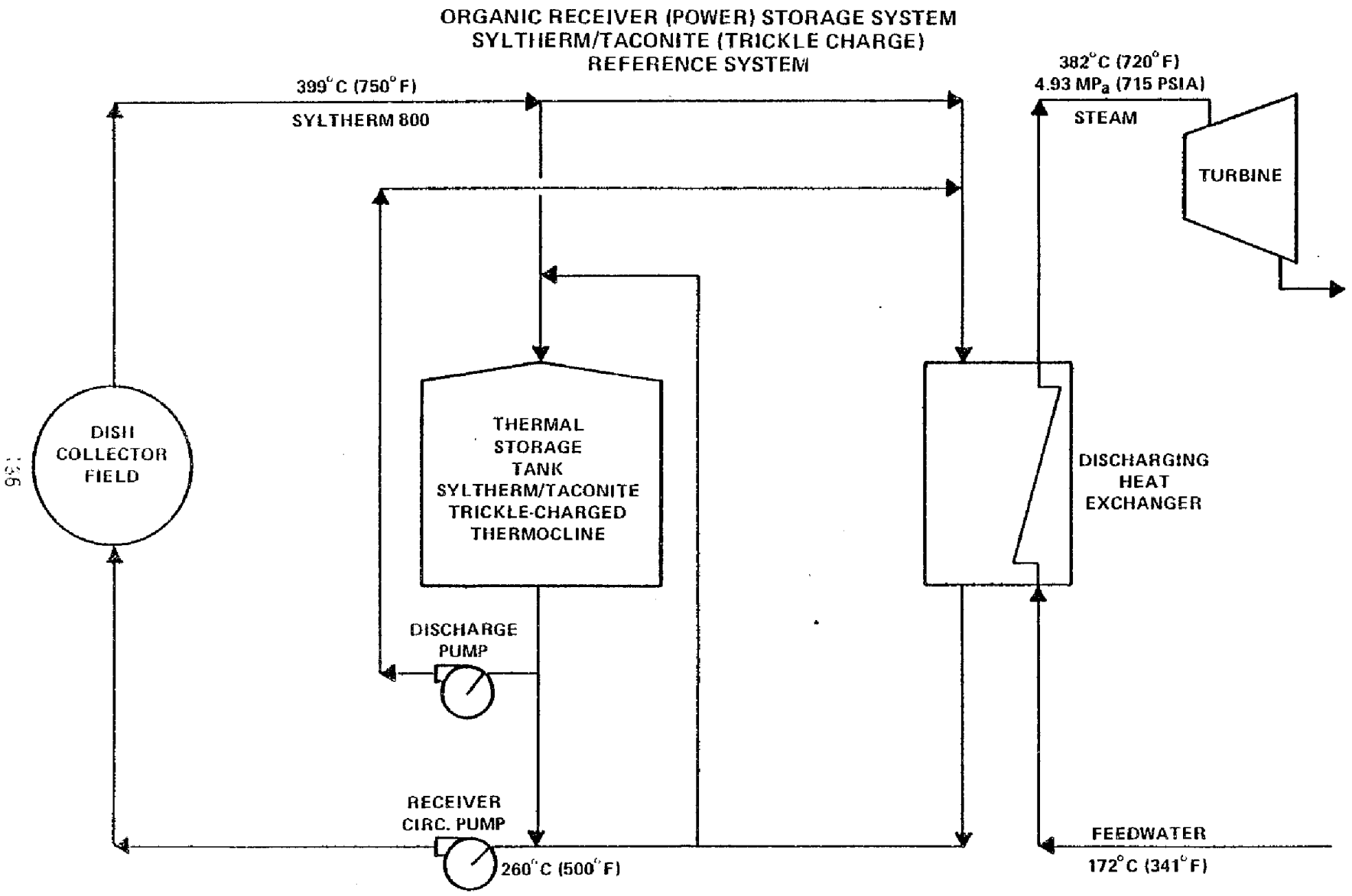

Figure 3–27. THERMAL STORAGE SYSTEM
SYLTHERM/TACONITE (TRICKLE CHARGE) (REFERENCE SYSTEM)

required inventory of Syltherm 800, a very expensive silicon-base synthetic oil. The concept is similar to a conventional thermocline except that hot fluid is not used to store heat but merely to transfer heat during charging and discharging.

During the charging mode, Syltherm from the receiver at 399°C (750°F) is pumped to the top of the thermal storage tank into a distribution system within the tank that uniformly distributes the fluid so that it "trickles" down over and transfers heat to the taconite pellets. It is collected in the sump at the bottom of the tank at about 260°C (500°F) where it is pumped back to the receiver to be heated once again to 399°C (750°F). As the thermal storage tank charges [increasing its temperature from 260°C (500°F) to 399°C (750°F)], the thermocline progresses downward until it reaches the bottom, where the tank reaches fully charged condition.

During the discharge mode, Syltherm is pumped from the sump of the thermal storage tank at 399°C (750°F) to the discharging heat exchanger where the fluid cools to 260°C (500°F) while generating steam at 4.93 MPa (715psia) and 382°C (720°F). The Syltherm is then carried to the top of the thermal storage tank where it passes through the distribution system and "trickles" down over and absorbs heat from the taconite pellets. It then collects in the sump at 399°C (750°F) to complete the loop. As the thermal storage tank discharges, reducing its temperature from 399°C (750°F) to 260°C (500°F), the thermocline progresses downward as the heat stored within the tank is discharged until it reaches the bottom of the tank, where the tank reaches fully discharged condition.

The temperature profile for the Syltherm/taconite reference thermal storage concept is shown in Figure 3-28.

3.6.3.2. Thermal Storage Design Data

The conceptual design data for the reference Syltherm/taconite storage concept for 1, 6, and 15 hours of storage is shown in Tables 3-49, 3-50, and 3-51, respectively.

3.6.3.3 Discussion

The Syltherm/taconite trickle charge concept utilizes a low cost solid media (taconite) and a minimal amount of a relatively expensive fluid (Syltherm 800) to provide an economical storage concept. However, some potential problem areas have been identified in dual-media storage systems, namely: 1) fluid degradation, 2) thermocline instability, especially with trickle charge, and 3) increase in tank stresses due to thermal cycling ("ratcheting").

Results of fluid loss rate tests by Sandia Laboratories [18] indicates that Syltherm losses can be very significant, particularly when operating at elevated temperatures while in contact with taconite. However, these tests were laboratory type static bench tests and somewhat different results can be expected from systems in actual operation. Fluid loss rates for Syltherm and other fluids are shown in Table 4-7, Section 4.4.

A-8.80.043

ORGANIC RECEIVER (POWER) STORAGE SYSTEM
SYLTHERM/TACONITE (TRICKLE CHARGE)
REFERENCE SYSTEM

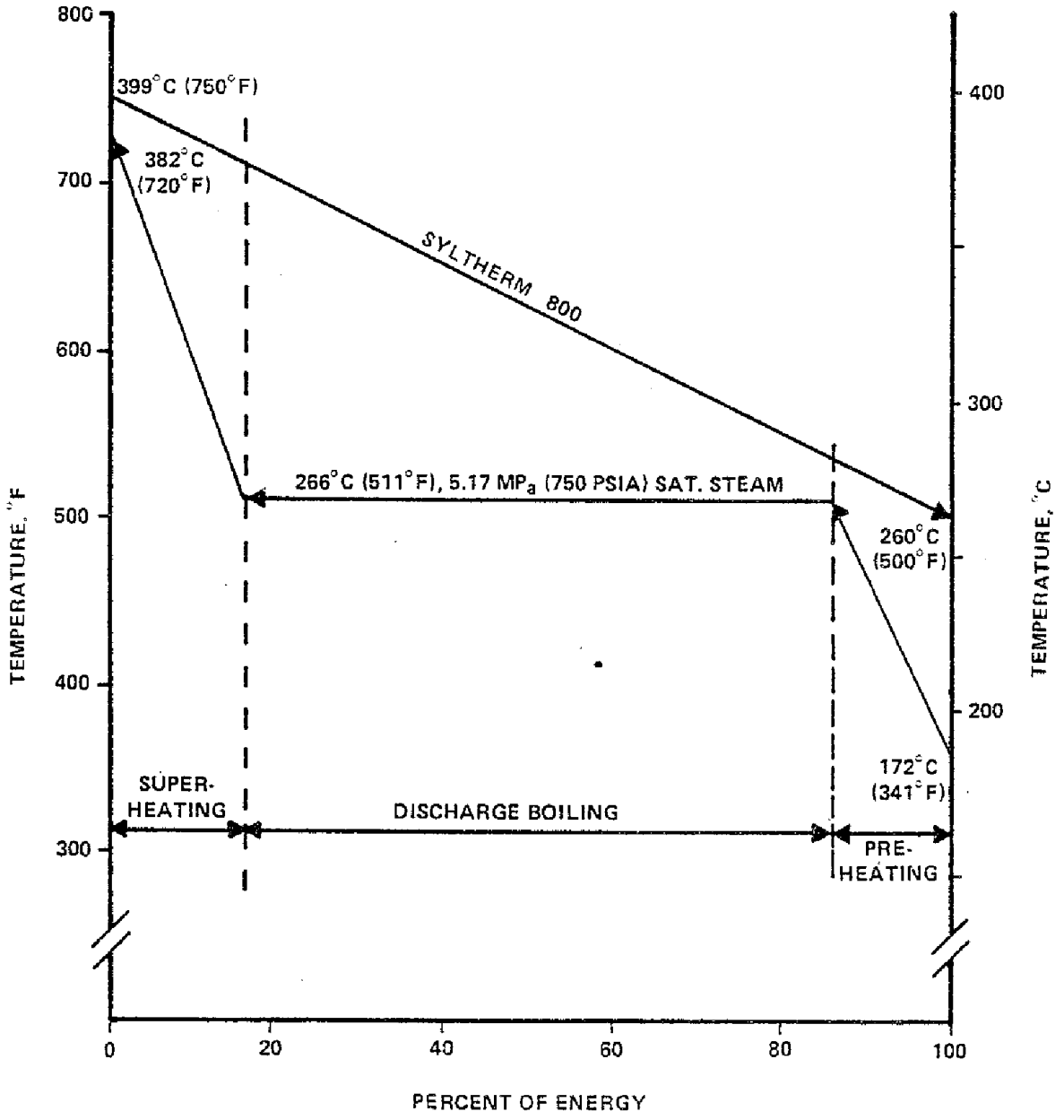

Figure 3—28. TEMPERATURE PROFILE
SYLTHERM/TACONITE
(REFERENCE SYSTEM)

Table 3-49. THERMAL STORAGE DESIGN DATA
ORGANIC FLUID RECEIVER-POWER
SYLTHERM/TACONITE TRICKLE-CHARGE (REFERENCE SYSTEM)

HOURS OF STORAGE: One (1)

		STAGE 1 OF 1 Syltherm/Taconite Trickle - Charge
STORAGE MEDIA		
1. Operating Temperature		
a. Hot	°C (°F)	399 (750)
b. Cold	°C (°F)	260 (500)
2. Quantity (Total)		
a. Syltherm 800	kg (ton)	3025 (3.33)
b. Taconite	kg (ton)	6.92×10^4 (76.2)
ENERGY RELATED EQUIPMENT		
1. Storage Capacity	$MW_t h$	2.11
2. Storage Tanks		
a. Quantity		2 - 50%
b. Size, each (Dia.xHt.)	m(ft)	3.4 x 2.0 (11.0 x 6.5)
c. Material		Carbon Steel
d. Weight, each	kg (ton)	2.45×10^3(2.7)
3. Tank Insulation		
a. Type		Mineral Fiber w/Al. Lagging
b. Thickness	m (ft)	0.61 (2.0)
4. Tank Foundation		
a. Type		Concrete Mat
b. Thickness	m	0.76(2.5) Insul.+ 0.61 (2.0)Struct.
c. Quantity, Total	$m^3(yd^3)$	28.8 (37.7)

		Charging	Discharging
POWER RELATED EQUIPMENT			
1. Charging Fluid/Discharging Fluid		Syltherm 800	Steam
a. Flow, Total	kg/s (lb/hr)	8.74 (6.94×10^4)	0.871(6.91×10^3)
b. Pressure	MPa (psia)	Atmospheric	4.93 (715)
c. Temperature	°C (°F)	399 (750)	382 (720)
2. Storage Fluid		Syltherm 800	Syltherm 800
a. Flow, Total	kg/s (lb/hr)	1.48(1.18×10^4)	7.26 (5.76×10^4)
b. Pressure (Tank)	MPa (psia)	Atmospheric	Atmospheric
c. Temperature (Pump)	°C (°F)	260 (500)	399 (750)
3. Pumps			
a. Quantity		1-100%	1-100%
b. Type		Horiz. Centrif.	Horiz. Centrif.
c. Material		Carbon Steel	Carbon Steel
d. Fluid		Syltherm 800	Syltherm 800
e. Capacity, each	m^3/s (gpm)	1.20×10^{-2} (190)	1.22×10^{-2} (194)
f. Head	m (ft)	92.0(302)	52.4 (172)
g. Power (Shaft), each	kWe (hp)	10.5 (14.1)	5.0 (6.7)
h. Motor size	kWe (hp)	14.9 (20)	7.5 (10)
4. Heat Exchangers			
a. Quantity		None	1-100%
b. Type			Shell & Tube
c. Material			Carbon Steel
d. Surface Area, Total	$m^2(ft^2)$		42.5 (457)
e. Duty, Total	MW_t		2.11
ANNUAL ENERGY			
1. Electrical Energy	10^3kWeh	3.6[a]	2.0
2. Electrical Energy(Total)	10^3kWeh	5.6[a]	
3. Heat Loss (Total)	10^9J(10^9BTU)	65.2 (0.0618)	

Notes:
[a]Annual Electrical Energy Includes Only Energy Chargeable to Storage System.

Table 3-50. THERMAL STORAGE DESIGN DATA
ORGANIC FLUID RECEIVER-POWER
SYLTHERM/TACONITE TRICKLE-CHARGE (REFERENCE SYSTEM)

HOURS OF STORAGE: Six (6)

		STAGE 1 OF 1 Sylitherm/Taconite Trickle - Charge
STORAGE MEDIA		
1. Operating Temperature		
a. Hot	°C (°F)	399 (750)
b. Cold	°C (°F)	260 (500)
2. Quantity (Total)		
a. Syltherm 800	kg (ton)	1.81×10^4 (20.0)
b. Taconite	kg (ton)	4.15×10^5 (457.3)
ENERGY RELATED EQUIPMENT		
1. Storage Capacity	MW_th	12.66
2. Storage Tanks		
a. Quantity		2 - 50%
b. Size, each (Dia.xHt.)	m(ft)	5.9 x 3.5 (19.5 x 11.5)
c. Material		Carbon Steel
d. Weight, each	kg (ton)	9.33×10^3(10.3)
3. Tank Insulation		
a. Type		Mineral Fiber w/Al. Lag
b. Thickness	m (ft)	0.30 (1.0)
4. Tank Foundation		
a. Type		Concrete Mat
b. Thickness	m (ft)	0.76(2.5) Insul+ 0.91 (3.0)Struct
c. Quantity, Total	$m^3(yd^3)$	102.8 (134.5)

		Charging	Discharging
POWER RELATED EQUIPMENT			
1. Charging Fluid/Discharging Fluid		Syltherm 800	Steam
a. Flow, Total	kg/s (lb/hr)	16.1 (1.28×10^5)	0.871(6.91×10^3)
b. Pressure	MPa (psia)	Atmospheric	4.93 (715)
c. Temperature	°C (°F)	260 (500)	382 (720)
2. Storage Fluid		Syltherm 800	Syltherm 800
a. Flow, Total	kg/s (lb/hr)	8.88(7.05×10^4)	7.26 (5.76×10^4)
b. Pressure (Tank)	MPa (psia)	Atmospheric	Atmospheric
c. Temperature (Pump)	°C (°F)	260 (500)	399 (750)
3. Pumps			
a. Quantity		1-100%	1-100%
b. Type		Horiz. Centrif.	Horiz. Centrif.
c. Material		Carbon Steel	Carbon Steel
d. Fluid		Syltherm 800	Syltherm 800
e. Capacity, each	m^3/s (gpm)	2.21×10^{-2} (351)	1.22×10^{-2} (194)
f. Head	m (ft)	92.0 (302)	52.4 (172)
g. Power (Shaft), each	kWe (hp)	19.4 (26.0)	5.0 (6.7)
h. Motor size	kWe (hp)	29.8 (40)	7.5 (10)
4. Heat Exchangers			
a. Quantity		None	1-100%
b. Type			Shell & Tube
c. Material			Carbon Steel
d. Surface Area, Total	$m^2(ft^2)$		42.5 (457)
e. Duty, Total	MW_t		2.11
ANNUAL ENERGY			
1. Electrical Energy	10^3kWeh	21.3[a]	12.1
2. Electrical Energy(Total)	10^3kWeh	33.4[a]	
3. Heat Loss (Total)	10^9J(10^9BtU)	353 (0.335)	

Notes:
[a]Annual Electrical Energy Includes Only Energy Chargeable to Storage System.

Table 3-51. THERMAL STORAGE DESIGN DATA
ORGANIC FLUID RECEIVER-POWER
SYLTHERM/TACONITE TRICKLE-CHARGE (REFERENCE SYSTEM)

HOURS OF STORAGE: Fifteen (15)

		STAGE 1 OF 1 Sytherm/Taconite Trickle - Charge
STORAGE MEDIA		
1. Operating Temperature		
a. Hot	°C (°F)	399 (750)
b. Cold	°C (°F)	260 (500)
2. Quantity (Total)		
a. Sytherm 800	kg (ton)	4.54×10^4 (50.0)
b. Taconite	kg (ton)	1.04×10^6 (1144)
ENERGY RELATED EQUIPMENT		
1. Storage Capacity	$MW_t h$	31.65
2. Storage Tanks		
a. Quantity		2 - 50%
b. Size, each (Dia.xHt.)	m(ft)	7.9 x 4.9 (26.0 x 16.0)
c. Material		Carbon Steel
d. Weight, each	kg (ton)	2.01×10^4(22.2)
3. Tank Insulation		
a. Type		Mineral Fiber w/Al. Lag
b. Thickness	m (ft)	0.20 (0.67)
4. Tank Foundation		
a. Type		Concrete Mat
b. Thickness	m (ft)	0.76(2.5) Insul+ 0.91 (3.0) Struct
c. Quantity, Total	$m^3(yd^3)$	178.4 (233.3)

		Charging	Discharging
POWER RELATED EQUIPMENT			
1. Charging Fluid/Discharging Fluid		Sytherm 800	Steam
a. Flow, Total	kg/s (lb/hr)	23.2 (1.84×10^5)	0.871(6.91×10^3)
b. Pressure	MPa (psia)	Atmospheric	4.93 (715)
c. Temperature	°C (°F)	260 (500)	382 (720)
2. Storage Fluid		Sytherm 800	Sytherm 800
a. Flow, Total	kg/s (lb/hr)	16.0(1.27×10^5)	7.26 (5.76×10^4)
b. Pressure (Tank)	MPa (psia)	Atmospheric	Atmospheric
c. Temperature (Pump)	°C (°F)	260 (500)	399 (750)
3. Pumps			
a. Quantity		1-100%	1-100%
b. Type		Horiz. Centrif.	Horiz. Centrif.
c. Material		Carbon Steel	Carbon Steel
d. Fluid		Sytherm 800	Sytherm 800
e. Capacity, each	m^3/s (gpm)	3.19×10^{-2} (505)	1.22×10^{-2} (194)
f. Head	m (ft)	92.0 (302)	52.4 (172)
g. Power (Shaft), each	kWe (hp)	28.0 (37.5)	5.0 (6.7)
h. Motor size	kWe (hp)	29.8 (40)	7.5 (10)
4. Heat Exchangers			
a. Quantity		None	1-100%
b. Type			Shell & Tube
c. Material			Carbon Steel
d. Surface Area, Total	$m^2(ft^2)$		42.5 (457)
e. Duty, Total	MW_t		2.11
ANNUAL ENERGY			
1. Electrical Energy	10^3kWeh	53.3[a]	30.1
2. Electrical Energy(Total)	10^3kWeh		83.4[a]
3. Heat Loss (Total)	10^9J(10^9BTU)		971 (0.92)

Notes:
[a]Annual Electrical Energy Includes Only Energy Chargeable to Storage System.

The trickle charge thermocline concept in large dual-media storage systems must still be demonstrated. For example, the design of a distribution system capable of distributing the fluid evenly so that an effective thermocline can be established, has not been done. For the purpose of this study, we have assumed 20% of the bed height is unusable due to absence of a perfect thermocline and another 2.4% is assumed unusable due to heat loss.

The potential problem of "ratcheting" of the storage tanks and media was not investigated as it was judged to be beyond the scope of this study.

Results show the Syltherm/taconite trickle charge reference storage system to be the most cost effective of the final three concepts studied but degradation data indicates the degree of technical risk to be high. Experience with large scale installations at the temperatures required is minimal to none. Questions relative to long-term fluid decomposition, material compatability and high temperature storage tank design, i.e., tank configuration, insulating method, thermal cycling, and type of foundation must still be answered.

To simplify costing of the system, two half-capacity storage tanks were assumed. In reality, however, four quarter-capacity or eight eighth-capacity tanks may be a better choice. To be able to discharge a trickle charge storage tank, the sump contents must be at the high temperature, i.e., 399°C (750°F). If a tank is not fully charged, before it can be discharged the thermocline must be inverted, i.e., the cold fluid in the sump must be recirculated to the top of the tank, forcing the thermocline downward until the fluid in the sump reaches the high temperature. Some thermocline spreading and loss of available energy can be expected from this process. With a greater number of smaller tanks, the tanks can be charged completely in series; as soon as the first tank is fully charged the system has an immediate discharge capability; there is no need for a period of recirculation to invert the thermocline before discharging can begin. Since the energy utilization efficiency (the proportion of energy stored that can be utilized) increases as the number of tanks increases, the total cost of the storage system is not expected to increase significantly if the number of tanks is increased to four or eight.

3.6.4. Hitec Salt (2-Tank)

3.6.4.1. System Description

A flow diagram showing the Hitec Salt (2-tank) thermal storage concept is shown in Figure 3-29. The major difference between the Hitec (2-tank) system and the Syltherm/taconite reference system is the necessary addition of a Syltherm-to-Hitec charging heat exchanger.

During the charging mode, molten salt at 254°C (490°F) is pumped from the cold tank through the charging heat exchanger where it is heated to 377°C (710°F) by 399°C (750°F) Syltherm from the receiver. The 377°C (710°F) molten salt is then carried to the hot tank where it is stored until needed. The hot Syltherm that is used to heat the salt is returned to the receiver at 277°C (530°F).

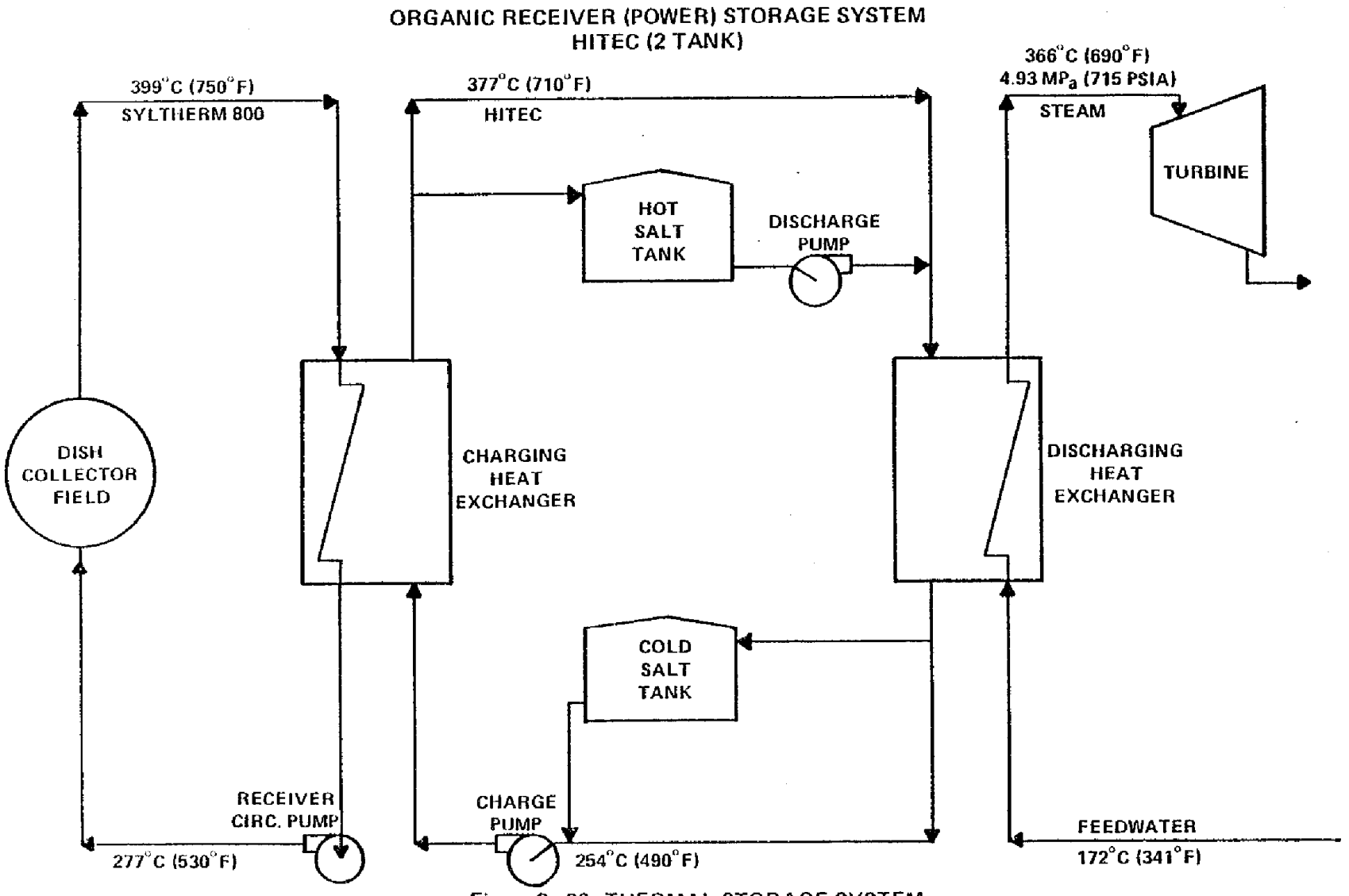

Figure 3–29. THERMAL STORAGE SYSTEM
HITEC (2 TANK)

During the discharging mode, molten salt at 377°C (710°F) is pumped from the hot tank through the discharging heat exchanger where it cools to 254°C (490°F) while generating steam at 4.93 MPa (715psia) and 366°C (690°F), and collects in the cold tank, to be charged again as needed.

The temperature profile for the Hitec salt (2-tank) thermal storage concept is shown in Figure 3-30.

3.6.4.2. Thermal Storage Design Data

The conceptual design data for the Hitec (2-tank) thermal storage concept for 1, 6, and 15 hours of storage is shown in Tables 3-52, 3-53, and 3-54, respectively.

3.6.4.3. Discussion

In order to provide a concept that did not require oil-to-solid-media contact, a 2-tank system was conceived using a molten salt as the storage media. Draw salt, an equimolar mixture of KNO_3 and $NaNO_3$, was initially agreed upon as the best choice because of its relatively low cost ($400/ton). When freezing of the molten salt in the discharge heat exchanger became a concern later on in the study, Hitec salt, a mixture of KNO_3, $NaNO_3$, and $NaNO_2$ was substituted because of its lower melting temperature (143°C/290°F), although its cost was slightly higher ($550/ton).

As previously mentioned, the major difference between the Hitec 2-tank system and the reference system is the addition of a charging heat exchanger. The need for an intermediate heat exchanger became apparent when a secondary loop using a low cost media was incorporated into the system in an effort to eliminate any oil-to-solid media contact as well as minimize the Syltherm inventory. A charging heat exchanger accomplished this, isolating the Syltherm receiver loop from the rest of the system, but had other impacts as well. Added cost of a heat exchanger is significant and increased temperature differences caused most system design temperatures to be different from the reference system, including the Syltherm return temperature to the receiver (17°C/30°F higher) and the generated steam temperature (17°C/30°F lower). The higher Syltherm return temperature caused a 14% increase in required Syltherm flow as compared to the reference system, while the reduced steam temperature did not have a significant effect on the system. However, to maintain a constant thermal discharge rate of 2.11 MW_t, the discharge steam flow rate needed to be increased by 1.6% because of the reduced turbine throttle temperature.

Overall, the Hitec salt (2-tank) thermal storage concept appears to have significantly less technical risk than the Syltherm/taconite trickle charge reference system simply due to its basically proven technology. However, costs due to an added heat exchanger, an extra storage tank, Hitec inventory, and other miscellaneous items caused the Hitec system to be less cost effective than the Syltherm/taconite reference system.

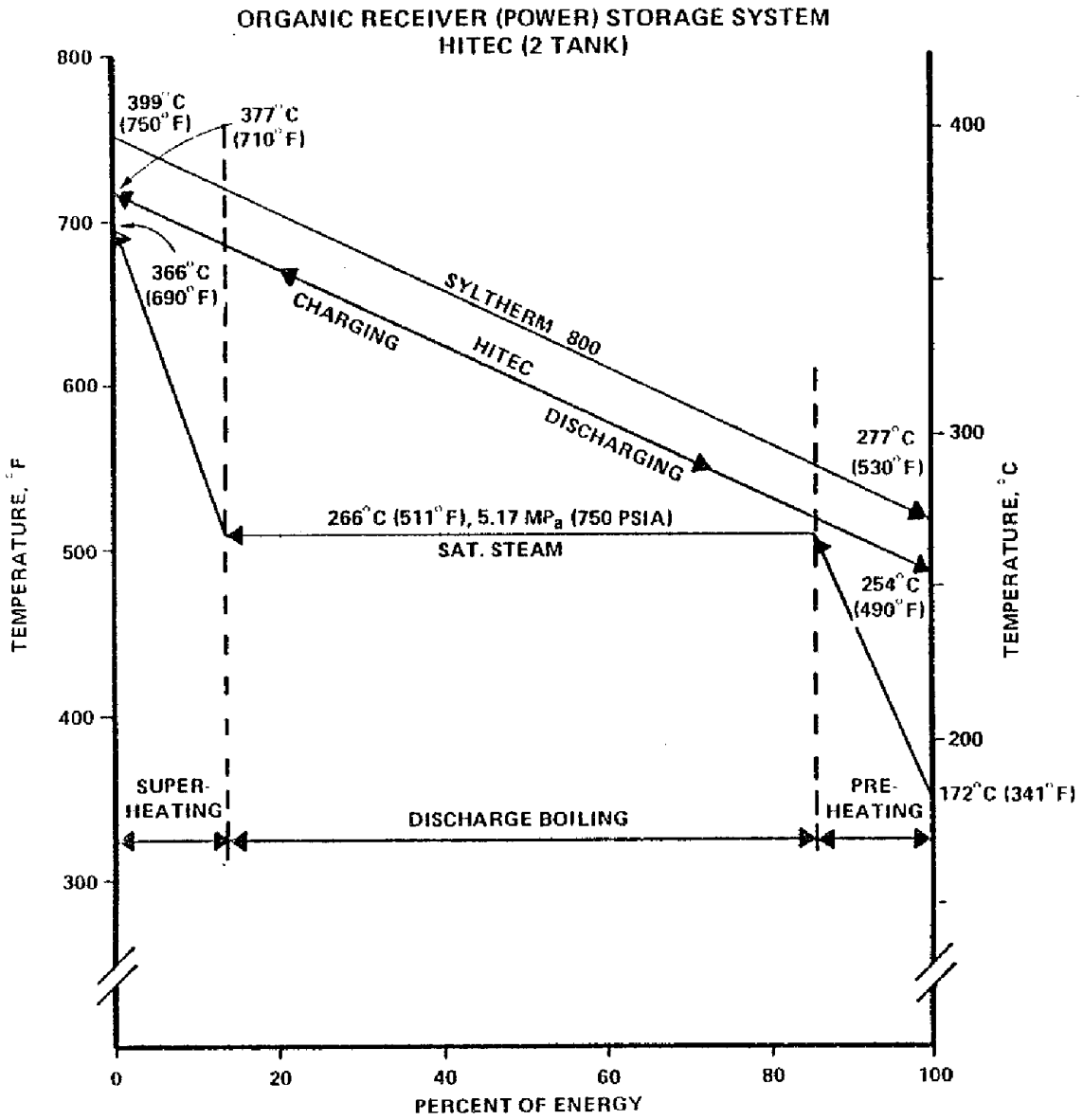

Figure 3–30. TEMPERATURE PROFILE HITEC (2 TANK)

Table 3-52. THERMAL STORAGE DESIGN DATA
ORGANIC FLUID RECEIVER-POWER
HITEC (2 TANK)

HOURS OF STORAGE: One (1)

		STAGE 1 OF 1 Hitec (2 Tank)
STORAGE MEDIA		
1. Operating Temperature		
a. Hot	°C (°F)	399 (750)
b. Cold	°C (°F)	254 (490)
2. Quantity (Total)		
a. HITEC Salt	kg (ton)	4.42×10^4 (48.7)
ENERGY RELATED EQUIPMENT		
1. Storage Capacity	MW_th	2.11
2. Storage Tanks		
a. Quantity		2 - 100%
b. Size, each (Dia.xHt.)	m(ft)	3.8x 2.3 (12.5 x 7.5)
c. Material		Carbon Steel
d. Weight, each	kg (ton)	3.2×10^3 (3.5)
3. Tank Insulation		
a. Type		Mineral Fiber w/Al. Lag
b. Thickness	m (ft)	0.69 (2.25)
4. Tank Foundation		
a. Type		Concrete Mat
b. Thickness	m (ft)	0.76(2.5) Insul+ 0.61 (2.0)Struct
c. Quantity, Total	$m^3(yd^3)$	36.5 (47.7)

		Charging	Discharging	
POWER RELATED EQUIPMENT				
1. Charging Fluid/Discharging Fluid		Syltherm 800	Steam	
a. Flow, Total	kg/s (lb/hr)	9.93 (7.88×10^4)	0.885(7.02×10^3)	
b. Pressure	MPa (psia)	Atmospheric	4.93 (715)	
c. Temperature	°C (°F)	399 (750)	366 (690)	
2. Storage Fluid		Hitec	Hitec	
a. Flow, Total	kg/s (lb/hr)	2.27(1.80×10^4)	11.6 (8.85×10^4)	
b. Pressure (Tank)	MPa (psia)	Atmospheric	Atmospheric	
c. Temperature (Pump)	°C (°F)	277 (530)	399 (750)	
3. Pumps		Receiver Pump	Charging Pump	Discharging Pump
a. Quantity		1-100%	1-100%	1-100%
b. Type		Horiz. Centrif.	Vert.Cantilever	Vert. Cantilever
c. Material		Carbon Steel	Carbon Steel	Carbon Steel
d. Fluid		Syltherm 800	Syltherm 800	Syltherm 800
e. Capacity, each	m^3/s (gpm)	1.40×10^{-2}(222)	7.57×10^{-3} (120)	6.31×10^{-3} (100)
f. Head	m (ft)	92.0 (302)	52.4 (172)	52.4 (172)
g. Power (Shaft), each	kWe (hp)	11.9 (16.0)	9.2 (12.3)	7.6 (10.2)
h. Motor size	kWe (hp)	18.7 (25)	14.9 (20)	14.9 (20)
4. Heat Exchangers				
a. Quantity		1-100%	1-100%	
b. Type		Shell & Tube	Shell & Tube	
c. Material		Carbon Steel	Carbon Steel	
d. Surface Area, Total	$m^2(ft^2)$	147.9 (1,592)	56.0 (603)	
e. Duty, Total	MW_t	2.54	2.11	
ANNUAL ENERGY				
1. Electrical Energy	10^3kWeh	4.0[a]	3.1[a]	3.1
2. Electrical Energy(Total)	10^3kWeh	10.2[a]		
3. Heat Loss (Total)	10^9J(10^9BTU)	81.3 (0.0771)		

Notes:
[a]Annual Electrical Energy Includes Only Energy Chargeable to Storage System.

Table 3-53. THERMAL STORAGE DESIGN DATA
ORGANIC FLUID RECEIVER-POWER
HITEC (2 TANK)

HOURS OF STORAGE: Six (6)

		STAGE I OF 1
		Hitec (2 Tank)
STORAGE MEDIA		
1. Operating Temperature		
a. Hot	°C (°F)	399 (750)
b. Cold	°C (°F)	254 (490)
2. Quantity (Total)		
a. HITEC Salt	kg (ton)	2.65×10^3 (292)
ENERGY RELATED EQUIPMENT		
1. Storage Capacity	$MW_e h$	12.66
2. Storage Tanks		
a. Quantity		2 - 100%
b. Size, each (Dia.xHt.)	m(ft)	6.9x 4.1 (22.5 x 13.5)
c. Material		Carbon Steel
d. Weight, each	kg (ton)	1.26×10^4 (13.9)
3. Tank Insulation		
a. Type		Mineral Fiber w/Al. Lagging
b. Thickness	m (ft)	0.30 (1.0)
4. Tank Foundation		
a. Type		Concrete Mat
b. Thickness	m (ft)	0.76(2.5) Insul+ 0.91 (3.0)Struct
c. Quantity, Total	$m^3(yd^3)$	135.1 (176.7)

		Charging		Discharging
POWER RELATED EQUIPMENT				
1. Charging Fluid/Discharging Fluid		Syltherm 800		Steam
a. Flow, Total	kg/s (lb/hr)	18.4 (1.46×10^5)		0.885(7.02×10^3)
b. Pressure	MPa (psia)	Atmospheric		4.93 (715)
c. Temperature	°C (°F)	277 (530)		366 (690)
2. Storage Fluid		Hitec		Hitec
a. Flow, Total	kg/s (lb/hr)	13.6(1.08×10^5)		11.2 (8.85×10^4)
b. Pressure (Tank)	MPa (psia)	Atmospheric		Atmospheric
c. Temperature (Pump)	°C (°F)	277 (530)		399 (750)
3. Pumps		Receiver Pump	Charging Pump	Discharging Pump
a. Quantity		1-100%	1-100%	1-100%
b. Type		Horiz. Centrif.	Vert. Cantilever	Vert. Cantilever
c. Material		Carbon Steel	Carbon Steel	Carbon Steel
d. Fluid		Syltherm 800	Hitec	Hitec
e. Capacity, each	m^3/s (gpm)	2.59×10^{-2} (410)	1.39×10^{-2} (221)	6.31×10^{-3} (100)
f. Head	m (ft)	92.0 (302)	52.4 (172)	52.4 (172)
g. Power (Shaft), each	kWe (hp)	22.1 (29.6)	17.0 (22.8)	7.6 (10.2)
h. Motor size	kWe (hp)	29.8 (40)	22.4 (30)	14.9 (20)
4. Heat Exchangers				
a. Quantity		1-100%		1-100%
b. Type		Shell & Tube		Shell & Tube
c. Material		Carbon Steel		Carbon Steel
d. Surface Area, Total	$m^2(ft^2)$	273.1 (2,940)		56.0 (603)
e. Duty, Total	MW_t	4.69		2.11
ANNUAL ENERGY				
1. Electrical Energy	10^3kWeh	24.2[a]	18.6[a]	18.6
2. Electrical Energy(Total)	10^3kWeh		61.4[a]	
3. Heat Loss (Total)	$10^9 J(10^9 BTU)$		492 (0.466)	

Notes:
[a]Annual Electrical Energy Includes Only Energy Chargeable to Storage System.

Table 3-54. THERMAL STORAGE DESIGN DATA
ORGANIC FLUID RECEIVER-POWER
HITEC (2 TANK)

HOURS OF STORAGE: Fifteen (15)

		STAGE 1 OF 1
		Hitec (2 Tank)
STORAGE MEDIA		
1. Operating Temperature		
a. Hot	°C (°F)	399 (750)
b. Cold	°C (°F)	254 (490)
2. Quantity (Total)		
a. HITEC Salt	kg (ton)	6.62×10^5 (730)
ENERGY RELATED EQUIPMENT		
1. Storage Capacity	MW_eh	31.65
2. Storage Tanks		
a. Quantity		2 → 100%
b. Size, each (Dia.xHt.)	m(ft)	9.3x 5.5 (30.5 x 18.0)
c. Material		Carbon Steel
d. Weight, each	kg (ton)	2.68×10^4 (29.6)
3. Tank Insulation		
a. Type		Mineral Fiber w/Al. Lagging
b. Thickness	m (ft)	0.20 (0.67)
4. Tank Foundation		
a. Type		Concrete Mat
b. Thickness	m (ft)	0.76(2.5) Insul+ 0.91 (3.0)Struct
c. Quantity, Total	$m^3(yd^3)$	242.7 (317.5)

		Charging		Discharging	
POWER RELATED EQUIPMENT					
1. Charging Fluid/Discharging Fluid		Syltherm 800		Steam	
a. Flow, Total	kg/s (lb/hr)	26.4 (2.09×10^4)		0.885(7.02×10^3)	
b. Pressure	MPa (psia)	Atmospheric		4.93 (715)	
c. Temperature	°C (°F)	277 (530)		366 (690)	
2. Storage Fluid		Hitec		Hitec	
a. Flow, Total	kg/s (lb/hr)	24.5(1.95×10^5)		11.2 (8.85×10^4)	
b. Pressure (Tank)	MPa (psia)	Atmospheric		Atmospheric	
c. Temperature (Pump)	°C (°F)	277 (530)		399 (750)	
3. Pumps		Receiver Pump	Charging Pump	Discharging Pump	
a. Quantity		1-100%	1-100%	1-100%	
b. Type		Horiz. Centrif.	Vert. Cantilever	Vert. Cantilever	
c. Material		Carbon Steel	Carbon Steel	Carbon Steel	
d. Fluid		Syltherm 800	Hitec	Hitec	
e. Capacity, each	m^3/s (gpm)	3.72×10^{-2}(589)	2.01×10^{-2} (318)	6.31×10^{-3} (100)	
f. Head	m (ft)	92.0 (302)	52.4 (172)	52.4 (172)	
g. Power (Shaft), each	kWe (hp)	31.8 (42.6)	24.5 (32.8)	7.6 (10.2)	
h. Motor size	kWe (hp)	37.3 (50)	29.8 (40)	14.9 (20)	
4. Heat Exchangers					
a. Quantity		1-100%		1-100%	
b. Type		Shell & Tube		Shell & Tube	
c. Material		Carbon Steel		Carbon Steel	
d. Surface Area, Total	$m^2(ft^2)$	393.2 (4,232)		56.0 (603)	
e. Ducy, Total	MW_t	6.75		2.11	
ANNUAL ENERGY					
1. Electrical Energy	10^3kWeh	60.5[a]	46.5[a]	46.5	
2. Electrical Energy(Total)	10^3kWeh		153.5[a]		
3. Heat Loss (Total)	10^3J(10^9BTU)		1,273 (1.207)		

Notes:
[a]Annual Electrical Energy Includes Only Energy Chargeable to Storage System.

In making a choice between the Hitec 2-tank concept and the Syltherm/taconite reference system, a dollar figure would have to be assigned to each concept reflecting the degree of technical risk.

3.6.5 Direct Contact Phase Change 2-Stage System (Latent and Sensible)

3.6.5.1 System Description

A flow diagram showing the Direct Contact Phase Change thermal storage concept is shown in Figure 3-31. This concept utilizes the latent heat as well as the sensible heat properties of a salt mixture in a two stage combined system. The first stage incorporates a solid-liquid salt phase change with a unique spray chamber system, being developed by Grumman Aerospace Corporation [5], while the second stage incorporates a sensible 2-tank system using only a hot salt tank, the cold tank being part of the first stage.

During the charging mode, the first stage charging pump takes molten salt at 310°C (590°F) from the liquid salt storage tank and passes it through the first stage charging heat exchanger where it is heated to 335°C (671°F). The hotter molten salt is then sprayed into the main salt storage tank where it melts solid salt at 310°C (590°F) that has formed during the discharge mode, the process continuing until all the solid salt is melted. At the same time, the second stage charging pump also takes molten salt at 310°C (590°F) from the liquid salt storage tank and passes it through the second stage charging heat exchanger where it is heated to 385°C (725°F) and desposited in the second stage hot salt tank.

During the discharging mode, the first stage discharge pump takes molten salt at 310°C (590°F) from the liquid salt storage tank and pumps it to the main spray chamber where it is combined with liquid lead-bismuth (Pb/Bi) at 279°C (534°F). The hotter molten salt gives up its latent heat to the cooler Pb/Bi fluid as it freezes into salt granules. Then, primarily due to the large difference in specific gravities of the two substances, the salt granules float to the top of the chamber and carry over the sides to be deposited in the bottom of the tank as granules of solid salt. In the process, the liquid Pb/Bi mixture is heated by the freezing salt to 299°C (570°F) and, after sinking to the bottom of the spray chamber, is pumped away to the liquid metal storage tank and then on to the first stage of the discharging heat exchanger (evaporator/preheater) where it is cooled back to 279°C (534°F) to complete the cycle. At the same time, the second stage discharge pump takes molten salt at 385°C (725°F) from the second stage hot tank and pumps it through the second stage of the discharging heat exchanger (superheater) where it is cooled to 310°C (590°F) while generating steam at 4.93 MPa (715 psia) and 371°C (700°F). The discharge steam flow rate, because of the lower throttle temperature, had to be increased approximately 1% over the reference storage system to maintain a constant thermal discharge rate of 2.11 MW_t. The cooled molten salt then continues back to the liquid salt storage tank which, in this system, takes the place of the second stage cold salt tank. It should be noted that the

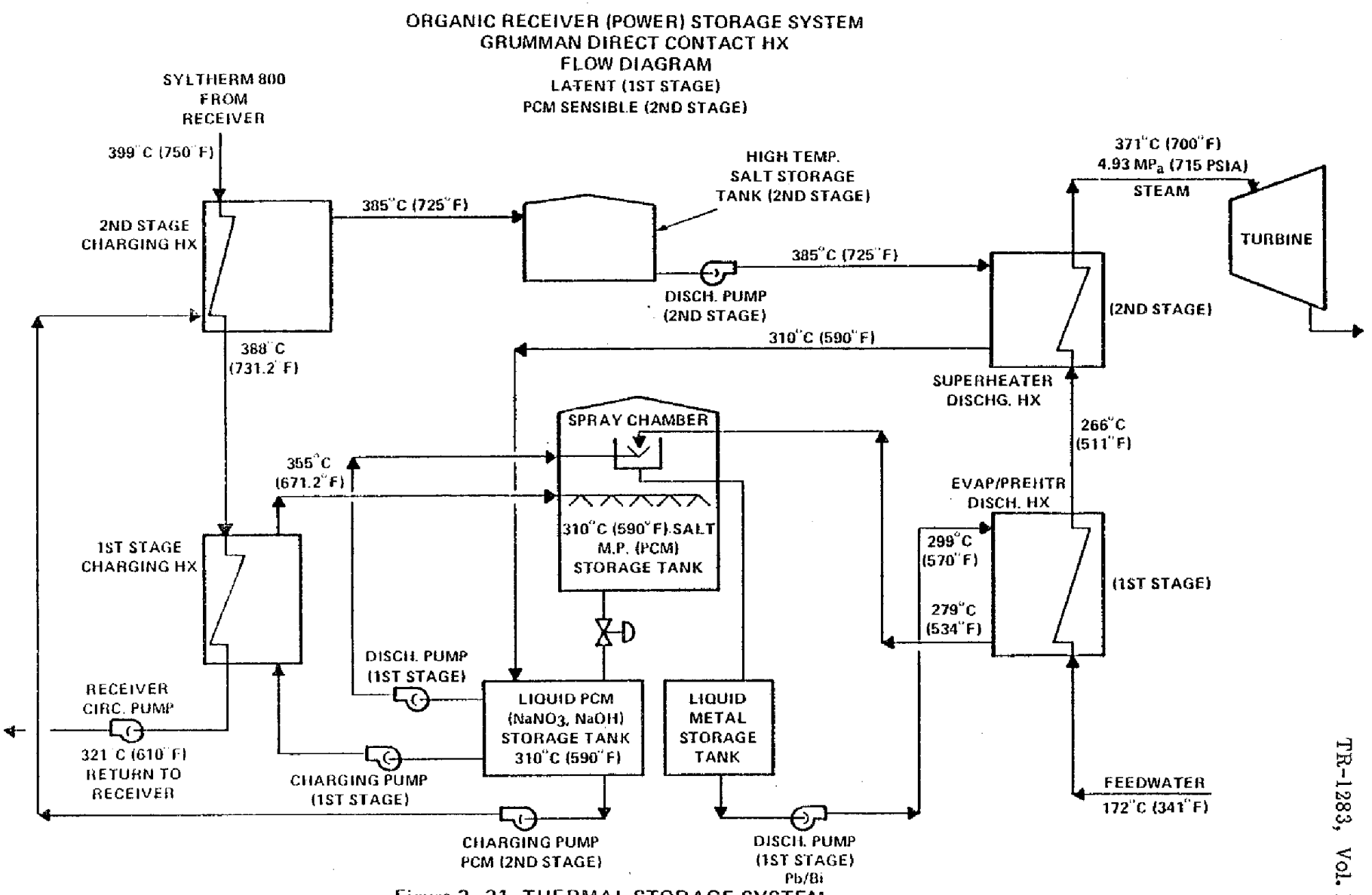

Figure 3–31. THERMAL STORAGE SYSTEM
LATENT, DIRECT CONTACT - PCM (2-STAGE)

Direct Contact Phase Change concept has been sized to handle the full receiver output of 4.69 MW_t. As it is presently conceived, the Direct Contact Storage concept does not allow generation of steam directly from the receiver except by passing through the storage system. In this respect, the system is always operating from storage when generating steam.

A temperature profile for the Direct Contact Phase Change 2-stage Thermal Storage Concept is shown in Figure 3-32.

3.6.5.2 Thermal Storage Design Data

The conceptual design data for the Direct Contact Phase Change thermal storage concept for 1, 6 and 15 hours of storage is shown in Tables 3-55, 3-56, and 3-57, respectively.

3.6.5.3 Discussion

The Direct Contact Phase Change thermal storage concept incorporates a first stage latent heat salt storage concept and a second stage sensible heat 2-tank salt storage concept integrated into a single system. Combining the two stages together eliminates the need for a second stage cold salt tank because salt needed to charge the second stage is stored in the liquid salt storage tank of the first stage.

It should be noted that the required Syltherm 800 flow for the Direct Contact Phase Change System is 79% higher than the Syltherm/taconite organic storage concept, due to the high Syltherm return temperature of 321°C (590°F), which imposes a substantial operating cost penalty on the system.

Because the second stage is a molten salt 2-tank thermal storage system as previously described in Section 3.6.4, technical feasibility is reasonably certain. However, the technology proposed in the first stage has not been demonstrated. For example, the Pb/Bi and the salt mixture are supposed to be immiscible fluids, but some carryover should be expected. The following questions are a few of the many that should therefore be resolved:

1) How much carryover will there be of salt to Pb/Bi and/or Pb/Bi to salt?

2) How will carryover affect the properties of the Pb/Bi and the salt?

3) How will carryover affect the makeup requirements of the Pb/Bi and the salt?

Because of the many uncertainties and unanswered questions relative to the first stage of this concept, a 4% O&M has been assigned to the first stage, as opposed to 2% on the second stage.

A glance at the present worth costs of the Direct Contact System shows the high costs associated with this system at 1 and 6 hours of storage. The

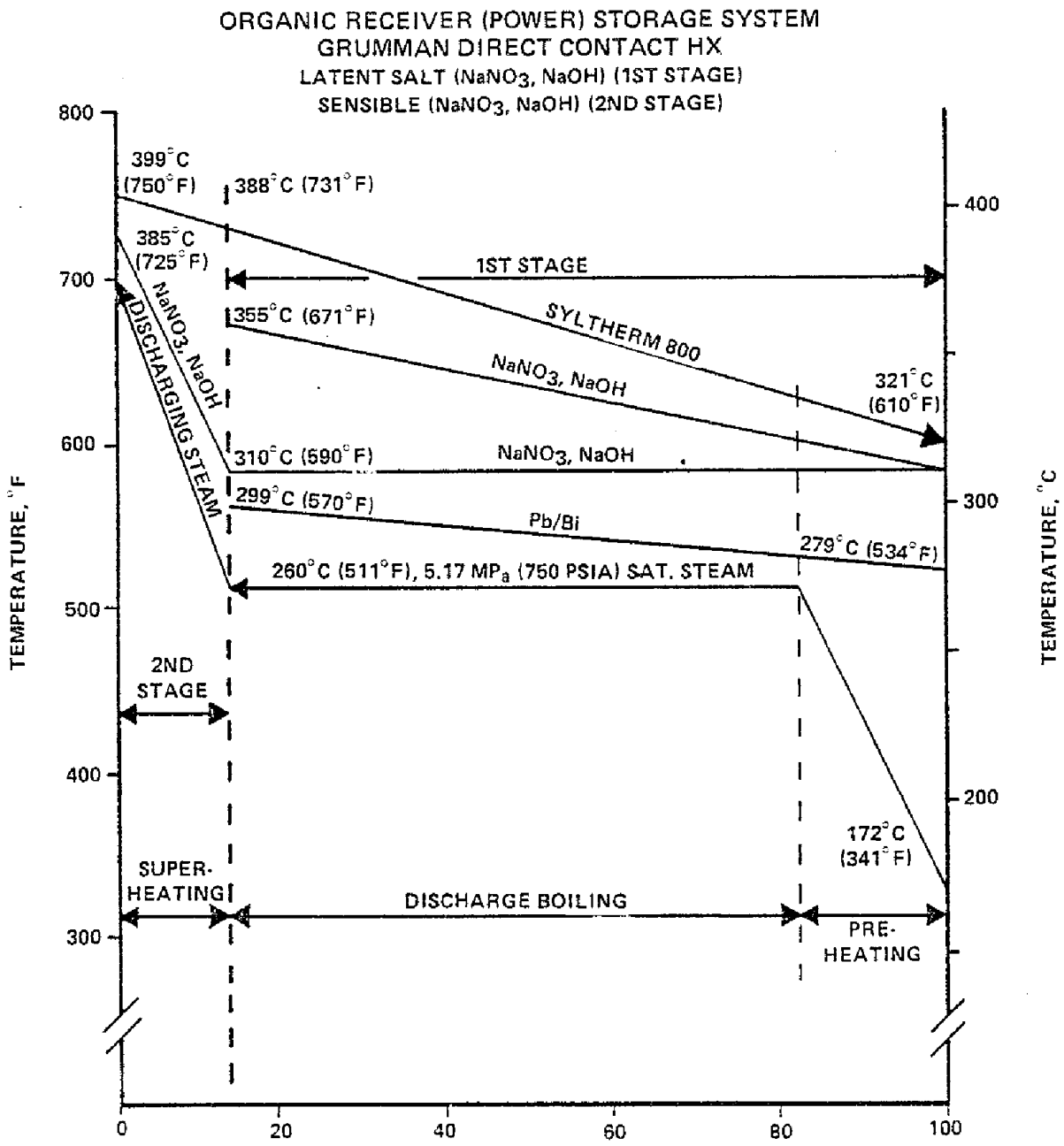

Figure 3–32. TEMPERATURE PROFILE
LATENT, DIRECT CONTACT - PCM (2-STAGE)

Table 3-55. THERMAL STORAGE DESIGN DATA
ORGANIC FLUID RECEIVER - POWER
DIRECT CONTACT PHASE CHANGE

Sheet 1 of 2

HOURS OF STORAGE: One (1)

		STAGE 1 of 2		
		Direct Contact HX (Latent)		
STORAGE MEDIA				
1. Operating Temperature				
a. Hot	°C (°F)	310 (590)		
b. Cold	°C (°F)	310 (500)		
2. Quantity (Total)				
a. $Na\ NO_3$, NaOH Salt	kg (ton)	4.30×10^4(47.4)		
b. Pb/Bi	kg (ton)	1.86×10^4 (20.5)		
ENERGY RELATED EQUIPMENT				
1. Storage Capacity	MW_th	1.82		
2. Storage Tanks		Main Salt Tank	Liquid Salt Tank	Pb/Bi Tank
a. Quantity		1 - 100%	1 - 100%	1 - 100%
b. Size, each (Dia.xHt.)	m(ft)	5.5x3.4(18.0x11.0)	1.7x0.9(5.5x3.0)	1.7x0.9(5.5x3.0)
c. Material		Carbon Steel	Carbon Steel	Carbon Steel
d. Weight, each	kg (ton)	5.2×10^3(5.8)	4.6×10^2(0.51)	4.6×10^2(0.51)
3. Tank Insulation				
a. Type		Mineral Fiber w/Al. Lagging		
b. Thickness	m (ft)	0.46 (1.5)	0.46 (1.5)	0.46 (1.5)
4. Tank Foundation				
a. Type		Concrete Mat	Concrete Mat	Concrete Mat
b. Thickness	m (ft)	0.61(2.0) Insul+ 0.76 (2.5)Struct.	0.61(2.0) Insul+ 0.61 (2.0)Struct.	0.61(2.0) Insul+ 0.76 (2.5)Struct.
c. Quantity, Total	$m^3(yd^3)$	36.2 (47.3)	15.4 (20.1)	4.2 (5.5)

		Charging	Discharging	
POWER RELATED EQUIPMENT				
1. Charging Fluid/Discharging Fluid		Syltherm 800	Steam	
a. Flow, Total	kg/s (lb/hr)	15.4 (1.22×10^5)	0.879(6.98×10^3)	
b. Pressure	MPa (psia)	Atmospheric	5.17(750)	
c. Temperature	°C (°F)	388 (731)	266 (511)	
2. Storage Fluid		Salt	Salt	Pb/Bi(Carrier Fluid)
a. Flow, Total	kg/s (lb/hr)	26.3(2.09×10^5)	10.0 (7.96×10^5)	620(492×10^6)
b. Pressure (Tank)	MPa (psia)	Atmospheric	Atmospheric	Atmospheric
c. Temperature (Pump)	°C (°F)	310 (590)	310 (590)	299(570)

3. Pumps					
a. Quantity		1-100%	1-100%	1-100%	1-100%
b. Type		Horiz. Centrif.	Vert. Cant.	Vert. Cant.	Vert. Cant.
c. Material		Carbon Steel	Carbon Steel	Carbon Steel	Carbon Steel
d. Fluid		Syltherm 800	Salt	Salt	Pb/Bi
e. Capacity, each	m^3/s (gpm)	2.31×10^{-2}(366)	1.38×10^{-2}(219)	5.26×10^{-3}(83.4)	5.95×10^{-2}(943)
f. Head	m (ft)	92.0 (302)	21.3 (70)	27.4(90)	7.6(25)
g. Power (Shaft), each	kWe (hp)	18.3 (24.8)	7.3 (9.8)	3.6 (4.8)	61.7 (82.7)
h. Motor size	kWe (hp)	22.4 (30)	11.2 (15)	3.7 (5)	74.6 (100)

4. Heat Exchangers			
a. Quantity		1-100%	1-100%
b. Type		Shell & Tube	Shell & Tube
c. Material		Carbon Steel	Carbon Steel
d. Surface Area, Total	$m^2(ft^2)$	136.0 (1,464)	16.7 (180)
e. Duty, Total	MW_t	2.19	1.82

ANNUAL ENERGY					
1. Electrical Energy	10^3kWeh	6.273[a]	2.509[a]	1.460	25.339
2. Electrical Energy(Per Stg)	10^3kWeh	35.281[a]			
3. Heat Loss (Per Stg)	10^9J(10^9BTU)	119 (0.113)			

Notes:
[a]Annual Electrical Energy Includes Only Energy Chargeable to Storage System.

Table 3-55. THERMAL STORAGE DESIGN DATA (Continued) Sheet 2 of 2
ORGANIC FLUID RECEIVER - POWER
DIRECT CONTACT PHASE CHANGE

HOURS OF STORAGE: One (1)

		STAGE 2 OF 2
		PCM Salt (Sensible)
STORAGE MEDIA		
1. Operating Temperature		
a. Hot	°C (°F)	385 (725)
b. Cold	°C (°F)	310 (590)
2. Quantity (Total)		
a. $NaNO_3$ NaOH Salt	kg (ton)	Charged To 1st Stage
ENERGY RELATED EQUIPMENT		
1. Storage Capacity	MW_th	0.29
2. Storage Tanks		Hot Salt Tank
a. Quantity		1 - 100%
b. Size, each (Dia.xHt.)	m(ft)	2.3 x 1.2 (7.5 x 4.0)
c. Material		Carbon Steel
d. Weight, each	kg (ton)	844 (0.93)
3. Tank Insulation		
a. Type		Mineral Fiber w/Aluminum Lagging
b. Thickness	m (ft)	0.61 (2.0)
4. Tank Foundation		
a. Type		Concrete Mat
b. Thickness	m (ft)	0.76 (2.5) Insul. + 0.61 (2.0) Struct.
c. Quantity, Total	$m^3(yd^3)$	5.7 (7.5)

		Charging	Discharging
POWER RELATED EQUIPMENT			
1. Charging Fluid/ Discharging Fluid		Syltherm 800	Steam
a. Flow, Total	kg/s (lb/hr)	15.4 (1.22 x 10^5)	0.879 (6.98 x 10^3)
b. Pressure	MPa (psia)	Atmospheric	4.93 (715)
c. Temperature	°C (°F)	399 (750)	371 (700)
2. Storage Fluid		Salt	Salt
a. Flow, Total	kg/s (lb/hr)	2.57 (2.04 x 10^4)	2.13 (1.69 x 10^4)
b. Pressure (Tank)	MPa (psia)	Atmospheric	Atmospheric
c. Temperature (Pump)	°C (°F)	310 (590)	385 (725)
3. Pumps			
a. Quantity		1 - 100%	1 - 100%
b. Type		Vert. Cantilever	Vert. Cantilever
c. Material		Carbon Steel	Carbon Steel
d. Fluid		Salt	Salt
e. Capacity, each	m^3/s (gpm)	1.34 x 10^{-3} (21.3)	1.12 x 10^{-3} (17.7)
f. Head	m (ft)	30.5 (100)	15.2 (50)
g. Power (Shaft), each	kWe (hp)	1.0 (1.4)	0.4 (0.6)
h. Motor size	kWe (hp)	1.1 (1.5)	0.6 (0.75)
4. Heat Exchangers			
a. Quantity		1 - 100%	1 - 100%
b. Type		Shell and Tube	Shell and Tube
c. Material		Carbon Steel	Carbon Steel
d. Surface Area, Total	$m^2(ft^2)$	12.4 (133)	12.6 (136)
e. Duty, Total	MW_t	0.35	0.29
ANNUAL ENERGY			
1. Electrical Energy	10^3kWeh	0.358[a]	0.183
2. Electrical Energy (Per Stg)	10^3kWeh	0.541[a]	
3. Heat Loss (Per Stg)	10^9J(10^9BTU)	20.0 (0.019)	

Notes:
[a]Annual Electrical Energy Includes Only Energy Chargable to Storage System.

Table 3-56. THERMAL STORAGE DESIGN DATA
ORGANIC FLUID RECEIVER - POWER
DIRECT CONTACT PHASE CHANGE

Sheet 1 of 2

HOURS OF STORAGE: Six (6)

		STAGE 1 OF 2
		Direct Contact HX (Latent)
STORAGE MEDIA		
1. Operating Temperature		
a. Hot	°C (°F)	310 (590)
b. Cold	°C (°F)	310 (590)
2. Quantity (Total)		
a. $Na\ NO_3$, NaOH Salt	kg (ton)	2.44×10^5(269)
b. Pb/Bi	kg (ton)	1.86×10^4 (20.5)

ENERGY RELATED EQUIPMENT

1. Storage Capacity	MW_th	10.89		
2. Storage Tanks		Main Salt Tank	Liquid Salt Tank	Pb/Bi Tank
a. Quantity		1 - 100%	1 - 100%	1 - 100%
b. Size, each (Dia.xHt.)	m(ft)	8.2x4.9(27.0x16.0)	2.1x1.1(7.0x3.5)	1.7x0.9(5.5x3.0)
c. Material		Carbon Steel	Carbon Steel	Carbon Steel
d. Weight, each	kg (ton)	1.16×10^4(12.8)	7.2×10^2(0.79)	4.6×10^2(0.51)
3. Tank Insulation				
a. Type		Mineral Fiber w/Al. Lagging		
b. Thickness	m (ft)	0.36 (1.2)	0.36 (1.2)	0.36 (1.2)
4. Tank Foundation				
a. Type		Concrete Mat	Concrete Mat	Concrete Mat
b. Thickness	m (ft)	0.61(2.0) Insul+ 0.76 (2.5)Struct.	0.61(2.0) Insul+ 0.61 (2.0)Struct.	0.61(2.0) Insul+ 0.76 (2.5)Struct.
c. Quantity, Total	$m^3(yd^3)$	95.6 (125)	19.8 (25.9)	4.2 (5.5)

POWER RELATED EQUIPMENT

		Charging		Discharging	
1. Charging Fluid/Discharging Fluid		Syltherm 800		Steam	
a. Flow, Total	kg/s (lb/hr)	28.4 (2.25×10^5)		0.879(6.98×10^3)	
b. Pressure	MPa (psia)	Atmospheric		5.17(750)	
c. Temperature	°C (°F)	388 (731)		266 (511)	
2. Storage Fluid		Salt		Salt	Pb/Bi(Carrier Fluid)
a. Flow, Total	kg/s (lb/hr)	48.6(3.86×10^5)		10.0 (7.96×10^4)	620(492×10^6)
b. Pressure (Tank)	MPa (psia)	Atmospheric		Atmospheric	Atmospheric
c. Temperature (Pump)	°C (°F)	310 (590)		310 (590)	299(570)
3. Pumps					
a. Quantity		1-100%	1-100%	1-100%	1-100%
b. Type		Horiz. Centrif.	Vert. Cant.	Vert. Cant.	Vert. Cant.
c. Material		Carbon Steel	Carbon Steel	Carbon Steel	Carbon Steel
d. Fluid		Syltherm 800	Salt	Salt	Pb/Bi
e. Capacity, each	m^3/s (gpm)	4.26×10^{-2}(675)	2.55×10^{-2}(404)	5.26×10^{-3}(83.4)	5.95×10^{-2}(943)
f. Head	m (ft)	92.0 (302)	21.3 (70)	27.4(90)	7.6(25)
g. Power (Shaft), each	kWe (hp)	34.2 (45.8)	13.5 (18.1)	3.6 (4.8)	61.7 (82.7)
h. Motor size	kWe (hp)	37.3 (50)	14.9 (20)	3.7 (5)	74.6 (100)
4. Heat Exchangers					
a. Quantity		1-100%		1-100%	
b. Type		Shell & Tube		Shell & Tube	
c. Material		Carbon Steel		Carbon Steel	
d. Surface Area, Total	$m^2(ft^2)$	251.1 (2,703)		16.7 (180)	
e. Duty, Total	MW_t	4.04		1.82	

ANNUAL ENERGY

1. Electrical Energy	10^3kWeh	37.456[a]	14.875[a]	8.76	150.224
2. Electrical Energy(Per Stg)	10^3kWeh	211.325[a]			
3. Heat Loss (Per Stg)	10^9J(10^9BTU)	344 (0.326)			

Notes:
[a]Annual Electrical Energy Includes Only Energy Chargeable to Storage System.

Table 3-56. THERMAL STORAGE DESIGN DATA (Continued) Sheet 2 of 2
ORGANIC FLUID RECEIVER - POWER
DIRECT CONTACT PHASE CHANGE

HOURS OF STORAGE: Six (6)

		STAGE 2 OF 2
		PCM Salt (Sensible)
STORAGE MEDIA		
1. Operating Temperature		
a. Hot	°C (°F)	385 (725)
b. Cold	°C (°F)	310 (590)
2. Quantity (Total)		
a. $NaNO_3$ NaOH salt	kg (ton)	Charged To 1st Stage
ENERGY RELATED EQUIPMENT		
1. Storage Capacity	MW_th	1.77
2. Storage Tanks		Hot Salt Tank
a. Quantity		1 - 100%
b. Size, each (Dia.xHt.)	m(ft)	4.0 x 2.3 (13.0 x 7.5)
c. Material		Carbon Steel
d. Weight, each	kg (ton)	4.35×10^3 (4.8)
3. Tank Insulation		
a. Type		Mineral Fiber w/Aluminum Lagging
b. Thickness	m (ft)	0.67 (2.2)
4. Tank Foundation		
a. Type		Concrete Mat
b. Thickness	m (ft)	0.76 (2.5) Insul. + 0.91 (3.0) Struct.
c. Quantity, Total	$m^3(yd^3)$	24.0 (31.4)

		Charging	Discharging
POWER RELATED EQUIPMENT			
1. Charging Fluid/ Discharging Fluid		Syltherm 800	Steam
a. Flow, Total	kg/s (lb/hr)	28.4 (2.25×10^5)	0.879 (6.98×10^3)
b. Pressure	MPa (psia)	Atmospheric	4.93 (715)
c. Temperature	°C (°F)	399 (750)	371 (700)
2. Storage Fluid		Salt	Salt
a. Flow, Total	kg/s (lb/hr)	4.74 (3.76×10^4)	2.13 (1.69×10^4)
b. Pressure (Tank)	MPa (psia)	Atmospheric	Atmospheric
c. Temperature (Pump)	°C (°F)	310 (590)	385 (725)
3. Pumps			
a. Quantity		1 - 100%	1 - 100%
b. Type		Vert. Cantilever	Vert. Cantilever
c. Material		Carbon Steel	Carbon Steel
d. Fluid		Salt	Salt
e. Capacity, each	m^3/s (gpm)	2.49×10^{-3} (39.4)	1.12×10^{-3} (17.7)
f. Head	m (ft)	30.5 (100)	15.2 (50)
g. Power (Shaft), each	kWe (hp)	1.9 (2.5)	0.4 (0.6)
h. Motor size	kWe (hp)	2.2 (3)	0.6 (0.75)
4. Heat Exchangers			
a. Quantity		1 - 100%	1 - 100%
b. Type		Shell and Tube	Shell and Tube
c. Material		Carbon Steel	Carbon Steel
d. Surface Area, Total	$m^2(ft^2)$	22.8 (245)	12.6 (136)
e. Duty, Total	MW_t	0.63	0.29
ANNUAL ENERGY			
1. Electrical Energy	10^3kWeh	2.045[a]	1.095
2. Electrical Energy (Per Stg)	10^3kWeh	3.140[a]	
3. Heat Loss (Per Stg)	10^9J(10^9BTU)	55.9 (0.053)	

Notes:
[a]Annual Electrical Energy Includes Only Energy Chargeble to Storage System.

Table 3-57. THERMAL STORAGE DESIGN DATA
ORGANIC FLUID RECEIVER (POWER)
DIRECT CONTACT PHASE CHANGE

Sheet 1 of 2

HOURS OF STORAGE: Fifteen (15)

		STAGE 1 OF 2 Direct Contact HX (Latent)
STORAGE MEDIA		
1. Operating Temperature		
a. Hot	°C (°F)	310 (590)
b. Cold	°C (°F)	310 (500)
2. Quantity (Total)		
a. $NaNO_3$, NaOH Salt	kg (ton)	6.03×10^5(665)
b. Pb/Bi	kg (ton)	1.86×10^4 (20.5)

ENERGY RELATED EQUIPMENT

1. Storage Capacity	MW_th	27.23		
2. Storage Tanks		Main Salt Tank	Liquid Salt Tank	Pb/Bi Tank
a. Quantity		1 - 100%	1 - 100%	1 - 100%
b. Size, each (Dia.xHt.)	m(ft)	10.4x6.1(34.0x20.0)	2.3x1.2(7.5x4.0)	1.7x0.9(5.5x3.0)
c. Material		Carbon Steel	Carbon Steel	Carbon Steel
d. Weight, each	kg (ton)	1.83×10^4(20.2)	8.4×10^2(0.93)	4.6×10^2(0.51)
3. Tank Insulation				
a. Type		Mineral Fiber W/Al. Lagging		
b. Thickness	m (ft)	0.23 (0.75)	0.23 (0.75)	0.23 (0.75)
4. Tank Foundation				
a. Type		Concrete Mat	Concrete Mat	Concrete Mat
b. Thickness	m (ft)	0.61(2.0) Insul+ 1.07 (3.5)Struct.	0.61(2.0) Insul+ 0.61 (2.0)Struct.	0.61(2.0) Insul+ 0.76 (2.5)Struct.
c. Quantity, Total	$m^3(yd^3)$	150 (196)	26.3 (34.4)	4.2(5.5)

POWER RELATED EQUIPMENT

		Charging	Discharging	
1. Charging Fluid/Discharging Fluid		Syltherm 800	Steam	
a. Flow, Total	kg/s (lb/hr)	40.8 (3.24×10^5)	0.879(6.98×10^3)	
b. Pressure	MPa (psia)	Atmospheric	5.17(750)	
c. Temperature	°C (°F)	388 (731)	266 (511)	
2. Storage Fluid		Salt	Salt	Pb/Bi(Carrier Fluid)
a. Flow, Total	kg/s (lb/hr)	70.1(5.56×10^5)	10.0 (7.96×10^4)	620(492×10^6)
b. Pressure (Tank)	MPa (psia)	Atmospheric	Atmospheric	Atmospheric
c. Temperature (Pump)	°C (°F)	310 (590)	310 (590)	299(570)

3. Pumps					
a. Quantity		1-100%	1-100%	1-100%	1-100%
b. Type		Horiz. Centrif.	Vert. Cant.	Vert. Cant.	Vert. Cant.
c. Material		Carbon Steel	Carbon Steel	Carbon Steel	Carbon Steel
d. Fluid		Syltherm 800	Salt	Salt	Pb/Bi
e. Capacity, each	m^3/s (gpm)	6.13×10^{-2}(971)	3.67×10^{-2}(582)	5.26×10^{-3}(83.4)	5.95×10^{-2}(943)
f. Head	m (ft)	92.0 (302)	21.3 (70)	27.4(90)	7.6(25)
g. Power (Shaft), each	kWe (hp)	49.2 (65.9)	19.4 (26.0)	3.6 (4.8)	61.7 (82.7)
h. Motor size	kWe (hp)	56.0 (75)	22.4 (30)	3.7 (5)	74.6 (100)

4. Heat Exchangers			
a. Quantity		1-100%	1-100%
b. Type		Shell & Tube	Shell & Tube
c. Material		Carbon Steel	Carbon Steel
d. Surface Area, Total	$m^2(ft^2)$	361.4 (3,890)	16.7 (180)
e. Duty, Total	MW_t	5.81	1.32

ANNUAL ENERGY

1. Electrical Energy	10^3kWeh	93.3494	36.8428	21.9	375.385
2. Electrical Energy(Per Stg)	10^3kWeh	527.6764			
2. Heat Loss (Per Stg)	10^9J(10^9BTU)	859 (0.814)			

Notes:
[1]Annual Electrical Energy Includes Only Energy Chargeable to Storage System.

Table 3-57. THERMAL STORAGE DESIGN DATA (Continued) Sheet 2 of 2
ORGANIC FLUID RECEIVER - POWER
DIRECT CONTACT PHASE CHANGE

HOURS OF STORAGE: Fifteen (15)

		STAGE 2 OF 2 PCM Salt (Sensible)
STORAGE MEDIA		
1. Operating Temperature		
a. Hot	°C (°F)	385 (725)
b. Cold	°C (°F)	310 (590)
2. Quantity (Total)		
a. $NaNO_3$, NaOH salt	kg (ton)	Charged To 1st Stage
ENERGY RELATED EQUIPMENT		
1. Storage Capacity	$MW_t h$	4.42
2. Storage Tanks		Hot Salt Tank
a. Quantity		1 - 100%
b. Size, each (Dia.xHt.)	m(ft)	5.3 x 3.0 (17.5 x 10.0)
c. Material		Carbon Steel
d. Weight, each	kg (ton)	7.32×10^3 (8.07)
3. Tank Insulation		
a. Type		Mineral Fiber w/Aluminum Lagging
b. Thickness	m (ft)	0.43 (1.4)
4. Tank Foundation		
a. Type		Concrete Mat
b. Thickness	m (ft)	0.76 (2.5) Insul. + 0.91 (3.0) Struct.
c. Quantity, Total	$m^3(yd^3)$	41.9 (54.8)

		Charging	Discharging
POWER RELATED EQUIPMENT			
1. Charging Fluid/ Discharging Fluid		Syltherm 800	Steam
a. Flow, Total	kg/s (lb/hr)	40.8 (3.24×10^5)	0.879 (6.98×10^3)
b. Pressure	MPa (psia)	Atmospheric	4.93 (715)
c. Temperature	°C (°F)	399 (750)	371 (700)
2. Storage Fluid		Salt	Salt
a. Flow, Total	kg/s (lb/hr)	6.82 (5.41×10^4)	2.13 (1.69×10^4)
b. Pressure (Tanks)	MPa (psia)	Atmospheric	Atmospheric
c. Temperature (Pump)	°C (°F)	310 (590)	385 (725)
3. Pumps			
a. Quantity		1 - 100%	1 - 100%
b. Type		Vert. Cantilever	Vert. Cantilever
c. Material		Carbon Steel	Carbon Steel
d. Fluid		Salt	Salt
e. Capacity, each	m^3/s (gpm)	3.58×10^{-3} (56.7)	1.12×10^{-3} (17.7)
f. Head	m (ft)	30.5 (100)	15.2 (50)
g. Power (Shaft), each	kWe (hp)	2.7 (3.6)	0.4 (0.6)
h. Motor size	kWe (hp)	3.7 (5)	0.6 (0.75)
4. Heat Exchangers			
a. Quantity		1 - 100%	1 - 100%
b. Type		Shell and Tube	Shell and Tube
c. Material		Carbon Steel	Carbon Steel
d. Surface Area, Total	$m^2(ft^2)$	32.7 (352)	12.6 (136)
e. Duty, Total	MW_t	0.94	0.29
ANNUAL ENERGY			
1. Electrical Energy	10^3kWeh	5.228[a]	2.738
2. Electrical Energy (Per Stg)	10^3kWeh	7.966[a]	
3. Heat Loss (Per Stg)	10^9J(10^9BTU)	139 (0.132)	

Notes:
[a]Annual Electrical Energy Includes Only Energy Chargeble to Storage System.

cost of the many required tanks and pumps, although small, penalize the system severly at low hours of storage, making it not competitive with either Syltherm/taconite or Hitec 2-tank at 1 and 6 hours of storage. At 15 hours of storage, however, the reverse is true, with the Direct Contact system being the most cost effective of the three. Therefore, the Direct Contact Phase Charge Storage concept appears better suited economically to applications requiring many hours of thermal storage.

3.7 CLOSED AIR BRAYTON RECEIVER

3.7.1 Reference Solar Thermal System

The reference solar thermal system for the closed air Brayton receiver power application is shown in Figure 3-33. The reference cycle is based on a report of Closed Brayton Cycle Advanced Central Receiver Solar - Electric Power System by Boeing Engineering & Construction Company [3]. Two (2) - 75 MWe gross power modules are provided. The gas turbine inlet air temperature is 816°C (1500°F) at 3.45 MPa (500 psia). A sensible heat thermal storage of air/alumina brick is utilized.

3.7.2 Thermal Storage Concepts

The final thermal storage concepts considered for the closed air Brayton receiver conceptual designs include the following:

- Air/Alumina Brick (Reference System)
- Air/Cast Iron
- Air/Granite (External Heat Exchange)

3.7.3 Air/Alumina Brick (Reference System)

3.7.3.1 System Description

The reference air/alumina (Al_2O_3) brick sensible heat thermal storage system is shown in Figure 3-34. During the charging mode, air from the receiver enters the horizontal storage vessels, heating the storage media, then is recirculated back to the receiver by the circulation compressor. During the discharging mode the flow is reversed and air from the turbine recuperator enters the cold end of the vessels, removes heat from the storage media, and discharges as hot air which drives the turbine. The turbine compressor is utilized to circulate the air through the storage vessels during the discharge mode and the circulation compressor is inactive. As discharging continues, the air temperature from storage decays and the operation ceases when the air temperature supplied to the turbine drops to 683°C (1261°F).

The storage media material is aluminum oxide refractory brick. The refractory brick is cast in a hexagonal shape, known as a Freyn configuration, which when in place form circular flow channels in the axial direction of the vessel. Each hemispherical head is filled with alumina balls which act as diffusers. Inconel-617 grates are located between the alumina balls and brick and at the inlet and outlet of each vessel.

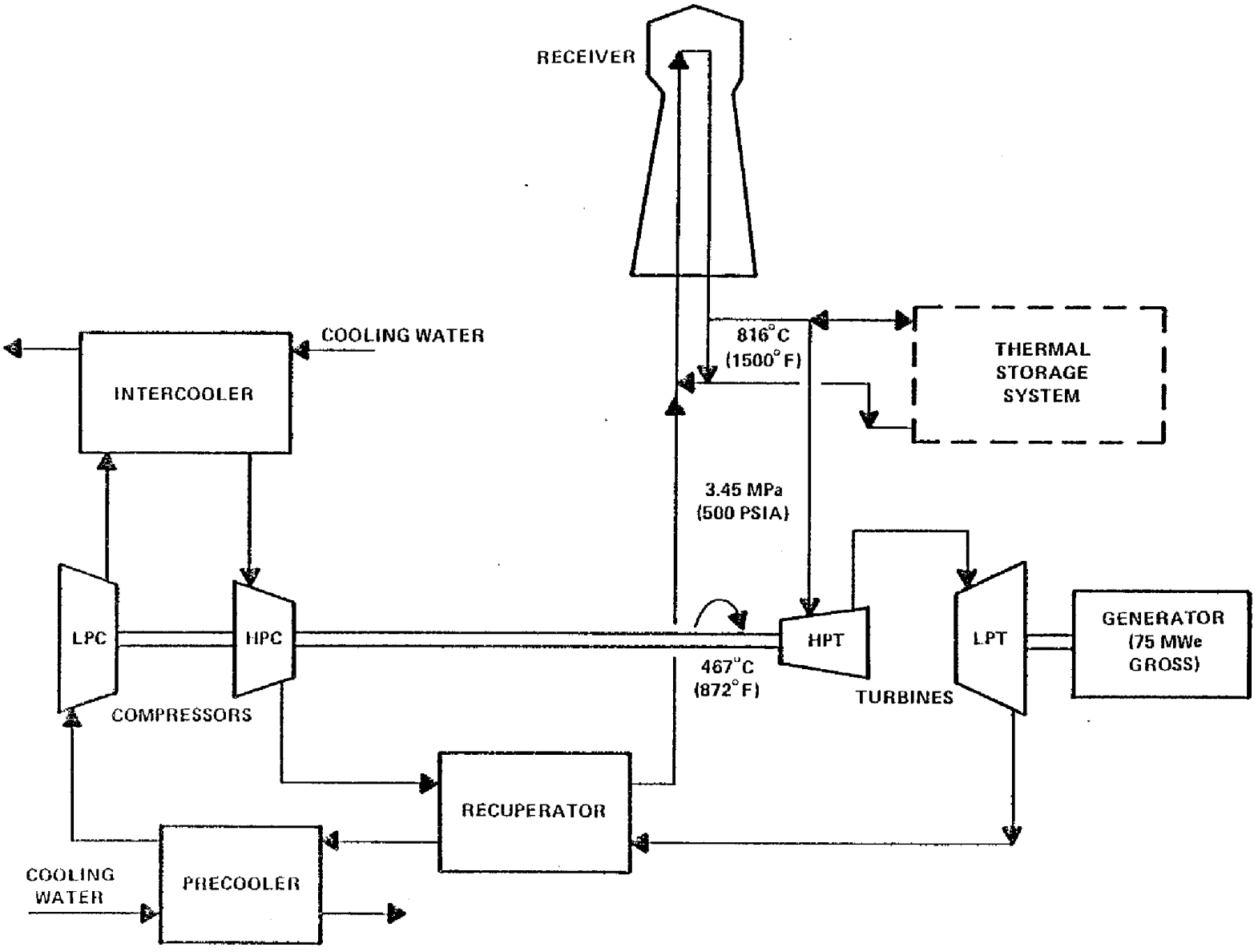

Figure 3–33. REFERENCE CLOSED AIR BRAYTON CYCLE (TWO-75 MWe GROSS MODULES)

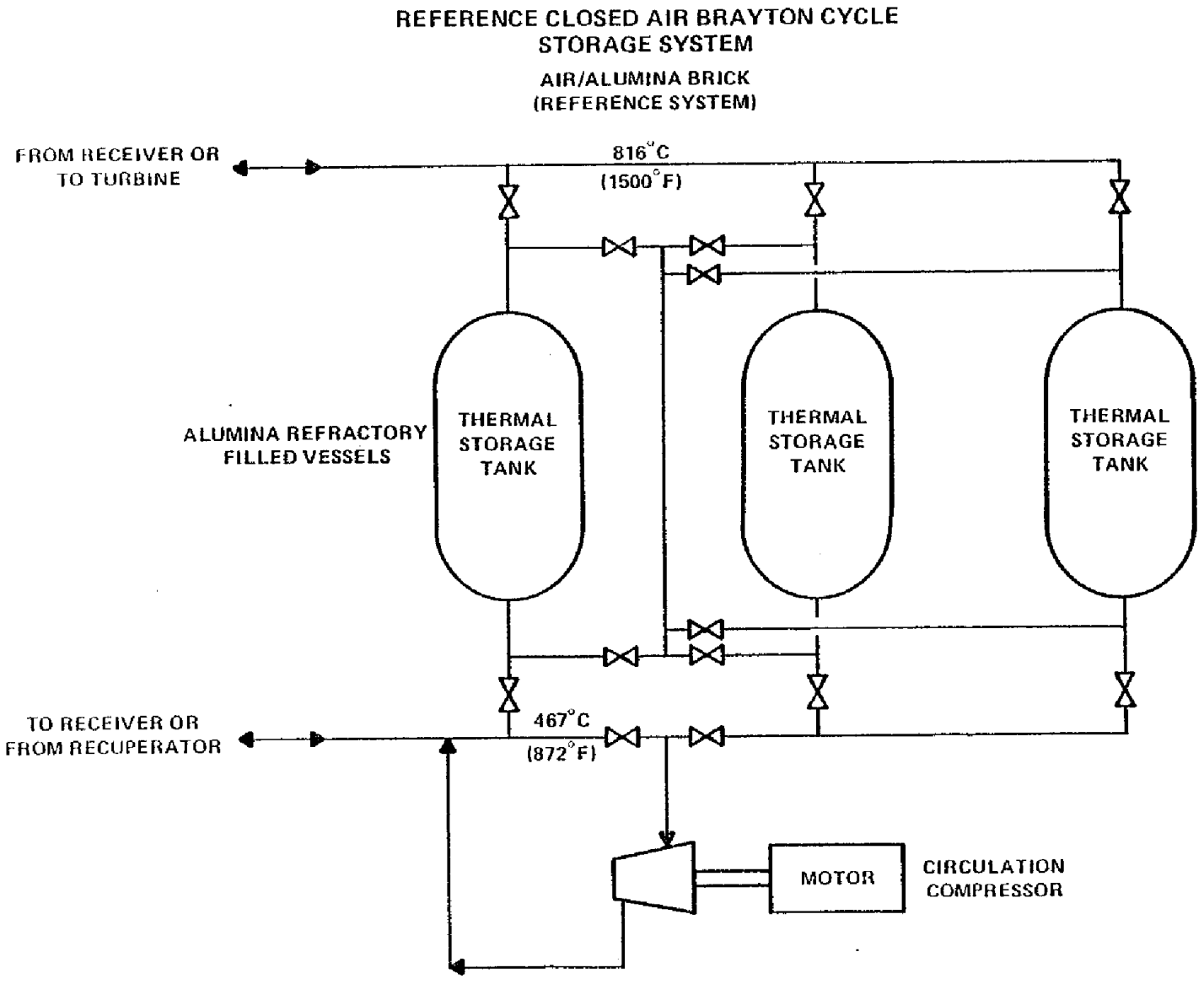

Figure 3–34. THERMAL STORAGE SYSTEM
AIR/ALUMINA BRICK (REFERENCE SYSTEM)

The pressure vessels are welded carbon steel, ASTM A516-70, designed and constructed in accordance with ASME B&PV Code, Section VIII, Division II, and are internally insulated. An Inconel-617 liner, 1.5mm (0.0598 in.) thick, is located between the internal insulation and storage media. The heat loss used in this design is equal to approxiamtely 3 1/2% of the rated storage capacity per 24 hour day.

3.7.3.2 Thermal Storage Design Data

The conceptual design data for the reference air/alumina brick storage concept for 1, 6 and 15 hours are shown in Tables 3-58, 3-59, and 3-60, respectively.

3.7.3.3 Discussion

The effective storage delta-T used in determining the mass of storage media required is based on the storage subsystem physical characteristics presented in the referenced Boeing report. An effective storage delta-T of 352°C (585°F) was used in the calculations.

The Boeing sensible heat thermal storage concept of direct contact heat exchange in an internally insulated pressure vessel appears to be a viable concept. However, some problem areas are apparent with the selected configurtation, including the selection and integrity of the internal insulation, storage media alignment and support, and thermal expansion provision, which indicates that further development work is required.

Alternate thermal storage materials were considered during the concept screening task however, none were identified to have more promise than the referenced alumina material. However, it may be economically attractive to use alumina balls throughout rather than the selected Freyn configuration because of the lower installed cost of the storage media, however this must be traded against increased storage vessel cost and higher pressure drop.

Prestressed cast iron vessels (PCIV) have been proposed by Professor P.V. Gilli [19] for thermal energy storage. Based on cost estimates for PCIV in the Gilli report, escalated to June 1980, a savings of about 10% in storage tank fabricated material cost would be realized over the reference 6-hour storage closed air Brayton case using carbon steel vessels. Also the PCIV erection cost estimated by Gilli is significantly lower than the eraction cost used in this study for steel vessels. However, no attempt was made in this study to compare PCIV vs. steel vessels on a comparative design and cost basis. Also it should be mentioned that PCIV are not presently ASME code approved vessels in the U.S.

Table 3-58. THERMAL STORAGE DESIGN DATA
CLOSED AIR BRAYTON RECEIVER
AIR/ALUMINA BRICK (REFERENCE SYSTEM)

(Totals For 2-75 MWe Gross Power Modules)

HOURS OF STORAGE: One (1)

		STAGE 1 OF 1
		Air/Alumina Brick
STORAGE MEDIA		
1. Operating Temperature		
a. Hot	°C (°F)	816 (1,500)
b. Cold	°C (°F)	400 (752) Minimum; 490 (915) Sizing
2. Quantity (Total)		
a. Alumina Brick	kg (ton)	3.27×10^6 (3,604) 95% Al_2O_3
b. Alumina Balls	kg (ton)	0.18×10^6 (201) 95% Al_2O_3
ENERGY RELATED EQUIPMENT		
1. Storage Capacity	MW_th	360
2. Storage Tanks		
a. Quantity		One (1)
b. Size, each (Dia.x L.)	m(ft)	6.22 (20.417) O.D. x 47.85 (157) Shell (Horiz.)
c. Material		Carbon Steel ASTM A516-70
d. Weight, each	kg (ton)	898,100 (990)
3. Tank Insulation		
a. Type		Calcium Silicate (Internal)
b. Thickness	m (ft)	0.15 (0.5)
4. Tank Foundation		
a. Type		Reinforced Concrete Mat
b. Thickness	m (ft)	1.22 (4)
c. Quantity, Total	$m^3(yd^3)$	363 (475)

		Charging	Discharging
POWER RELATED EQUIPMENT			
1. Receiver Fluid (Air)			
a. Flow, Total	kg/s (lb/hr)	150 (1.191×10^6)	
b. Pressure	MPa (psia)	3.45 (500)	
c. Temperature	°C (°F)	816 (1,500)	
2. Storage Fluid (Air)			
a. Flow, Total	kg/s (lb/hr)	150 (1.191×10^6)	900 (7.145×10^6)
b. Pressure (Tanks)	MPa (psia)	3.45 (500)	3.45 (500)
c. Temperature	°C (°F)	433 (812) Cold	816 (1,500) Hot
3. Compressors		Circulation Compressor	
a. Quantity		Two (2); One (1) Per Module	None
b. Type		Centrifugal	
c. Material		Stainless Steel	
d. Fluid		Air	
e. Capacity, each	kg/s (lb/hr)	75 (0.595×10^6)	
f. Head	MPa (psi)	0.275 (40)	
g. Power (Shaft), each	kWe (hp)	1,670 (2,236)	
h. Motor size	kWe (hp)	1,865 (2,500)	
4. Heat Exchangers			
a. Quantity		None	None
b. Type			
c. Material			
d. Surface Area, Total	$m^2(ft^2)$		
e. Duty, Total	MW_t		
ANNUAL ENERGY			
1. Electrical Energy	10^9kWeh	3.12	)
2. Electrical Energy(Total)	10^9kWeh	3.12	
3. Heat Loss (Total)	10^9J(10^9BTU)	11,995 (11.37)	

Table 3-59. THERMAL STORAGE DESIGN DATA
CLOSED AIR BRAYTON RECEIVER
AIR/ALUMINA BRICK (REFERENCE SYSTEM)

(Totals For 2-75 MWe Gross Power Modules)

HOURS OF STORAGE: Six (6)

		STAGE 1 OF 1 Air/Alumina Brick
STORAGE MEDIA		
1. Operating Temperature		
a. Hot	°C (°F)	816 (1,500)
b. Cold	°C (°F)	400 (752) Minimum; 490 (915) Sizing
2. Quantity (Total)		
a. Alumina Brick	kg (ton)	19.6×10^6 (21,620) 95% Al_2O_3
b. Alumina Balls	kg (ton)	1.10×10^6 (1,210) 95% Al_2O_3
ENERGY RELATED EQUIPMENT		
1. Storage Capacity	MW_th	2,160
2. Storage Tanks		
a. Quantity		Six (6)
b. Size, each (Dia.x L.)	m(ft)	6.22 (20.417) O.D. x 47.85 (157) Shell (Horiz.)
c. Material		Carbon Steel ASTM A516-70
d. Weight, each	kg (ton)	900,000 (992)
3. Tank Insulation		
a. Type		Calcium Silicate (Internal)
b. Thickness	m (ft)	0.15 (0.5)
4. Tank Foundation		
a. Type		Reinforced Concrete Mat
b. Thickness	m (ft)	1.22 (4)
c. Quantity, Total	$m^3(yd^3)$	2,179 (2,850)

		Charging	Discharging
POWER RELATED EQUIPMENT			
1. Receiver Fluid (Air)			
a. Flow, Total	kg/s (lb/hr)	900 (7.145×10^6)	-
b. Pressure	MPa (psia)	3.45 (500)	
c. Temperature	°C (°F)	816 (1,500)	
2. Storage Fluid (Air)			
a. Flow, Total	kg/s (lb/hr)	900 (7.145×10^6)	900 (7.145×10^6)
b. Pressure (Tanks)	MPa (psia)	3.45 (500)	3.45 (500)
c. Temperature	°C (°F)	433 (812) Cold	816 (1,500) Hot
3. Compressors		Circulation Compressor	
a. Quantity		Two (2); One (1) Per Module	None
b. Type		Centrifugal	
c. Material		Stainless Steel	
d. Fluid		Air	
e. Capacity, each	kg/s (lb/hr)	450 (3.573×10^6)	
f. Head	MPa (psi)	0.275 (40)	
g. Power (Shaft), each	kWe (hp)	10,000 (13,415)	
h. Motor size	kWe (hp)	10,440 (14,000)	
4. Heat Exchangers			
a. Quantity		None	None
b. Type			
c. Material			
d. Surface Area, Total	m^2/ft^2)		
e. Duty, Total	MW_t		
ANNUAL ENERGY			
1. Electrical Energy	10^6kWeh	48.71	0
2. Electrical Energy(Total)	10^6kWeh	48.71	
3. Heat Loss (Total)	10^9J(10^9BTU)	77,943 (73.88)	

Table 3-60. THERMAL STORAGE DESIGN DATA
CLOSED AIR BRAYTON RECEIVER
AIR/ALUMINA BRICK (REFERENCE SYSTEM)

[Totals for 2-75 MWe Gross Power Modules]

HOURS OF STORAGE: Fifteen (15)

		STAGE 1 OF 1 Air/Alumina Brick
STORAGE MEDIA		
1. Operating Temperature		
a. Hot	°C (°F)	816 (1,500)
b. Cold	°C (°F)	400 (752) Minimum; 490 (915) Sizing
2. Quantity (Total)		
a. Alumina Brick	kg (ton)	48.85×10^6 (53,848) 95% Al_2O_3
b. Alumina Balls	kg (ton)	2.93×10^6 (3,227) 95% Al_2O_3
ENERGY RELATED EQUIPMENT		
1. Storage Capacity	MW_th	5,400
2. Storage Tanks		
a. Quantity		Sixteen (16)
b. Size, each (Dia.x L.)	m(ft)	6.22 (20.417) O.D. x 44.70 (146.67) Shell (Horiz.)
c. Material		Carbon Steel ASTM A516-70
d. Weight, each	kg (ton)	848,226 (935)
3. Tank Insulation		
a. Type		Calcium Silicate (Internal)
b. Thickness	m (ft)	0.15 (0.5)
4. Tank Foundation		
a. Type		Reinforced Concrete Mat
b. Thickness	m (ft)	1.22 (4)
c. Quantity, Total	$m^3(yd^3)$	5,800 (7,600)

		Charging	Discharging
POWER RELATED EQUIPMENT			
1. Receiver Fluid (Air)			
a. Flow, Total	kg/s (lb/hr)	1,620 (12.86×10^6)	-
b. Pressure	MPa (psia)	3.45 (500)	
c. Temperature	°C (°F)	816 (1,500)	
2. Storage Fluid (Air)			
a. Flow, Total	kg/s (lb/hr)	1,620 (12.86×10^6)	900 (7.145×10^6)
b. Pressure (Tanks)	MPa (psia)	3.45 (500)	3.45 (500)
c. Temperature	°C (°F)	433 (812) Cold	816 (1,500) Hot
3. Compressors		Circulation Compressor	
a. Quantity		Four (4); Two (2) Per Module	None
b. Type		Centrifugal	
c. Material		Stainless Steel	
d. Fluid		Air	
e. Capacity, each	kg/s (lb/hr)	405 (3.215×10^6)	
f. Head	MPa (psi)	0.275 (40)	
g. Power (Shaft), each	kWe (hp)	9,010 (12,081)	
h. Motor size	kWe (hp)	9,700 (13,000)	
4. Heat Exchangers			
a. Quantity		None	None
b. Type			
c. Material			
d. Surface Area, Total	$m^2(ft^2)$		
e. Duty, Total	MW_t		
ANNUAL ENERGY			
1. Electrical Energy	10^6kWeh	121.41	0
2. Electrical Energy(Total)	10^6kWeh	121.41	
3. Heat Loss (Total)	$10^9J(10^9BTU)$	194,537 (184.49)	

3.7.4 Air/Cast Iron

3.7.4.1 System Description

Cast iron was considered as an alternative storage media to alumina brick because of its relatively low cost and higher storage density. The type of cast iron finally selected for this application is a heat resistant grade of "Meehanite", cast in the same Freyn configuration as the reference alumina brick. Otherwise the storage system description is the same as the reference case previously described.

3.7.4.2 Thermal Storage Design Data

The conceptual design data for the air/cast iron storage system is shown in Tables 3-61, 3-62, and 3-63 for 1, 6 and 15 hours of storage, respectively.

3.7.4.3 Discussion

Initially gray cast iron was considered as an alternate storage media, however upon review it was found that gray cast iron is not suitable for the operating temperature primarily due to high growth and scaling. A special processed iron, "Meehanite", produced by licensed or patented controlled processes, was selected in a heat-resistant grade.

Because of its higher storage density the use of cast iron as a storage media results in lower storage volumes compared to alumina for the same thermal storage capacity; however, since more cast iron (Meehanite) mass is required the resultant capital investment for the two storage concepts is approximately the same based on the cost numbers used.

3.7.5 Air/Granite (External Heat Exchanger)

3.7.5.1 System Description

An air/granite thermal storage thermocline concept utilized in the reference closed air Brayton cycle is shown in Figure 3-35. A similar concept was proposed by Rockwell International in their Conceptual Design of Advanced Central Receiver Power Systems Sodium - Cooled Receiver Concept [10]. A modular heat exchanger/fan configuration is proposed as shown in Figure 3-36.

As indicated in Figure 3-35, heated air from the receiver is passed through the tube-side of the finned-tube heat exchangers giving up heat to cooled air circulated from the bottom of the rock bed during charging. During discharging the air flows are reversed and hot air from the top of the rock bed is circulated through the heat exchanger, heating the air to the turbine. Receiver air is circulated by a circulation compressor (not shown) during charging and by the gas turbine compressor while discharging, as described for the reference case.

The temperature profile for the air/granite external heat exchange storage concept is shown in Figure 3-37.

Table 3-61. THERMAL STORAGE DESIGN DATA
CLOSED AIR BRAYTON RECEIVER
AIR/CAST IRON

[Totals for 2-75 MWe Gross Power Modules]

HOURS OF STORAGE: One (1)

		STAGE 1 OF 1
		Air/Cast Iron (Meehanite)
STORAGE MEDIA		
1. Operating Temperature		
a. Hot	°C (°F)	816 (1,500)
b. Cold	°C (°F)	400 (752) Minimum; 490 (915) Sizing
2. Quantity (Total)		
a. Cast Iron Brick	kg (ton)	4.76×10^6 (5,250)
b. Cast Iron Balls	kg (ton)	0.43×10^6 (475)
ENERGY RELATED EQUIPMENT		
1. Storage Capacity	MW_th	360
2. Storage Tanks		
a. Quantity		One (1)
b. Size, each (Dia.x L.)	m(ft)	6.22 (20.417) O.D. x 28.96 (95) Shell (Horiz.)
c. Material		Carbon Steel ASTM A516-70
d. Weight, each	kg (ton)	587,860 (648)
3. Tank Insulation		
a. Type		Calcium Silicate (Internal)
b. Thickness	m (ft)	0.13 (0.42)
4. Tank Foundation		
a. Type		Reinforced Concrete Mat
b. Thickness	m (ft)	1.22 (4)
c. Quantity, Total	$m^3(yd^3)$	409 (535)

		Charging	Discharging
POWER RELATED EQUIPMENT			
1. Receiver Fluid (Air)			
a. Flow, Total	kg/s (lb/hr)	150 (1.191×10^6)	
b. Pressure	MPa (psia)	3.45 (500)	
c. Temperature	°C (°F)	816 (1,500)	
2. Storage Fluid (Air)			
a. Flow, Total	kg/s (lb/hr)	150 (1.191×10^6)	900 (7.145×10^6)
b. Pressure (Tanks)	MPa (psia)	3.45 (500)	3.45 (500)
c. Temperature	°C (°F)	433 (812) Cold	816 (1,500) Hot
3. Compressors		Circulation Compressor	
a. Quantity		Two (2); One (1) Per Module	None
b. Type		Centrifugal	
c. Material		Stainless Steel	
d. Fluid		Air	
e. Capacity, each	kg/s (lb/hr)	75 (0.595×10^6)	
f. Head	MPa (psi)	0.275 (40)	
g. Power (Shaft), each	kWe (hp)	1,670 (2,236)	
h. Motor size	kWe (hp)	1,865 (2,500)	
4. Heat Exchangers			
a. Quantity		None	None
b. Type			
c. Material			
d. Surface Area, Total	$m^2(ft^2)$		
e. Duty, Total	MW_t		
ANNUAL ENERGY			
1. Electrical Energy	10^6kWeh	8.12	
2. Electrical Energy(Total)	10^6kWeh	8.12	
3. Heat Loss (Total)	10^9J(10^9BTU)	9.284 (8.80)	

Table 3-62. THERMAL STORAGE DESIGN DATA
CLOSED AIR BRAYTON RECEIVER
AIR/CAST IRON

[Totals for 2-75 MWe Gross Power Modules]

HOURS OF STORAGE: Six (6)

		STAGE 1 OF 1
		Air/Cast Iron (Meehanite)
STORAGE MEDIA		
1. Operating Temperature		
a. Hot	°C (°F)	816 (1,500)
b. Cold	°C (°F)	400 (752) Minimum; 490 (915) Sizing
2. Quantity (Total)		
a. Cast Iron Brick	kg (ton)	28.59×10^6 (31,516)
b. Cast Iron Balls	kg (ton)	2.58×10^6 (2,849)
ENERGY RELATED EQUIPMENT		
1. Storage Capacity	MW_th	2,160
2. Storage Tanks		
a. Quantity		Six (6)
b. Size, each (Dia.x L.)	m(ft)	6.22 (20.417) O.D. x 28.96 (95) Shell (Horiz.)
c. Material		Carbon Steel ASTM A516-70
d. Weight, each	kg (ton)	587,860 (648)
3. Tank Insulation		
a. Type		Calcium Silicate (Internal)
b. Thickness	m (ft)	0.13 (0.42)
4. Tank Foundation		
a. Type		Reinforced Concrete Mat
b. Thickness	m (ft)	1.22 (4)
c. Quantity, Total	$m^3(yd^3)$	2,454 (3,210)

		Charging	Discharging
POWER RELATED EQUIPMENT			
1. Receiver Fluid (Air)			
a. Flow, Total	kg/s (lb/hr)	900 (7.145×10^6)	-
b. Pressure	MPa (psia)	3.45 (500)	
c. Temperature	°C (°F)	816 (1,500)	
2. Storage Fluid (Air)			
a. Flow, Total	kg/s (lb/hr)	900 (7.145×10^6)	900 (7.145×10^6)
b. Pressure (Tanks)	MPa (psia)	3.45 (500)	3.45 (500)
c. Temperature	°C (°F)	433 (812) Cold	816 (1,500) Hot
3. Compressors		Circulation Compressor	
a. Quantity		Two (2); One (1) Per Module	None
b. Type		Centrifugal	
c. Material		Stainless Steel	
d. Fluid		Air	
e. Capacity, each	kg/s (lb/hr)	450 (3.573×10^6)	
f. Head	MPa (psi)	0.275 (40)	
g. Power (Shaft), each	kWe (hp)	10,000 (13,415)	
h. Motor size	kWe (hp)	10,440 (14,000)	
4. Heat Exchangers			
a. Quantity		None	None
b. Type			
c. Material			
d. Surface Area, Total	$m^2(ft^2)$		
e. Duty, Total	MW_t		
ANNUAL ENERGY			
1. Electrical Energy	10^6kWeh	48.71	0
2. Electrical Energy(Total)	10^6kWeh	48.71	
3. Heat Loss (Total)	10^9J(10^9BTU)	60,420 (57.27)	

Table 3-63. THERMAL STORAGE DESIGN DATA
CLOSED AIR BRAYTON RECEIVER
AIR/CAST IRON

[Totals for 2-75 MWe Gross Power Modules]

HOURS OF STORAGE: Fifteen (15)

		STAGE 1 OF 1
		Air/Cast Iron (Meehanite)
STORAGE MEDIA		
1. Operating Temperature		
a. Hot	°C (°F)	816 (1,500)
b. Cold	°C (°F)	400 (752) Minimum; 490 (915) Sizing
2. Quantity (Total)		
a. Cast Iron Brick	kg (ton)	71×10^6 (78,307)
b. Cast Iron Balls	kg (ton)	6.9×10^6 (7,603)
ENERGY RELATED EQUIPMENT		
1. Storage Capacity	MW_th	5,400
2. Storage Tanks		
a. Quantity		Sixteen (16)
b. Size, each (Dia.x L.)	m(ft)	6.22 (20.417) O.D. x 26.95 (88.42) Shell (Horiz.)
c. Material		Carbon Steel ASTM A516-70
d. Weight, each	kg (ton)	553,400 (610)
3. Tank Insulation		
a. Type		Calcium Silicate (Internal)
b. Thickness	m (ft)	0.13 (0.42)
4. Tank Foundation		
a. Type		Reinforced Concrete Mat
b. Thickness	m (ft)	1.22 (4)
c. Quantity, Total	$m^3(yd^3)$	6,545 (8,560)

		Charging	Discharging
POWER RELATED EQUIPMENT			
1. Receiver Fluid (Air)			
a. Flow, Total	kg/s (lb/hr)	1,620 (12.86×10^6)	-
b. Pressure	MPa (psia)	3.45 (500)	
c. Temperature	°C (°F)	816 (1,500)	
2. Storage Fluid (Air)*			
a. Flow, Total	kg/s (lb/hr)	1,620 (12.86×10^6)	900 (7.145×10^6)
b. Pressure (Tanks)	MPa (psia)	3.45 (500)	3.45 (500)
c. Temperature	°C (°F)	433 (812) Cold	816 (1,500) Hot
3. Compressors		Circulation Compressor	
a. Quantity		Four (4); Two (2) Per Module	None
b. Type		Centrifugal	
c. Material		Stainless Steel	
d. Fluid		Air	
e. Capacity, each	kg/s (lb/hr)	405 (3.215×10^6)	
f. Head	MPa (psi)	0.275 (40)	
g. Power (Shaft), each	kWe (hp)	9,010 (12,081)	
h. Motor size	kWe (hp)	9,700 (13,000)	
4. Heat Exchangers			
a. Quantity		None	None
b. Type			
c. Material			
d. Surface Area, Total	$m^2(ft^2)$		
e. Duty, Total	MW_t		
ANNUAL ENERGY			
1. Electrical Energy	10^6kWeh	121.41	0
2. Electrical Energy(Total)	10^6kWeh	121.41	
3. Heat Loss (Total)	10^9J(10^9BTU)	157,796 (149.57)	

CLOSED AIR BRAYTON RECEIVER

AIR/GRANITE STORAGE SYSTEM (EXTERNAL HEAT EXCHANGER)

A-8.80.101

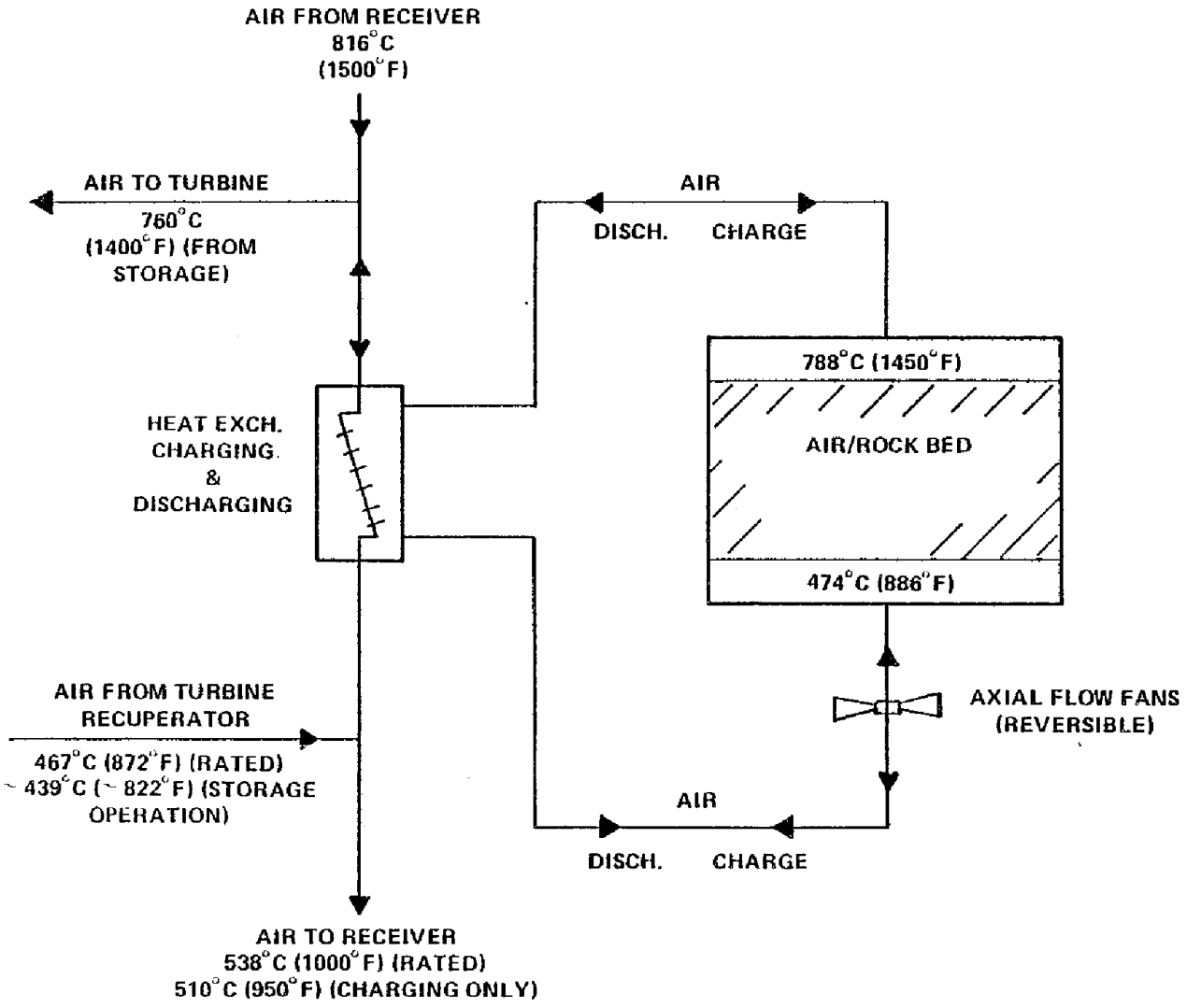

Figure 3–35. THERMAL STORAGE SYSTEM
AIR/GRANITE (EXTERNAL HEAT EXCHANGER)

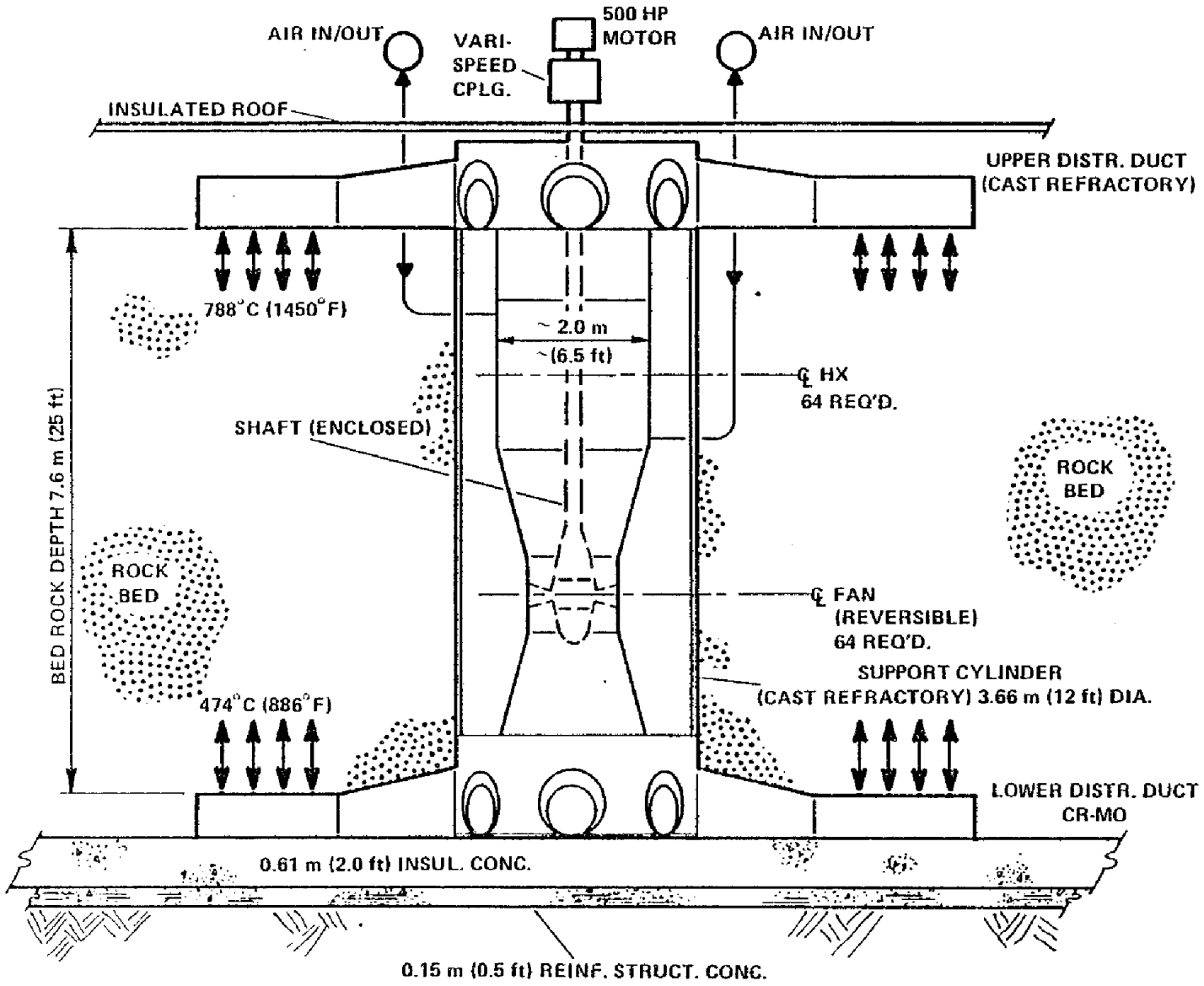

Figure 3–36. AIR/ROCK HX/FAN MODULE (TYPICAL)
CLOSED AIR BRAYTON RECEIVER

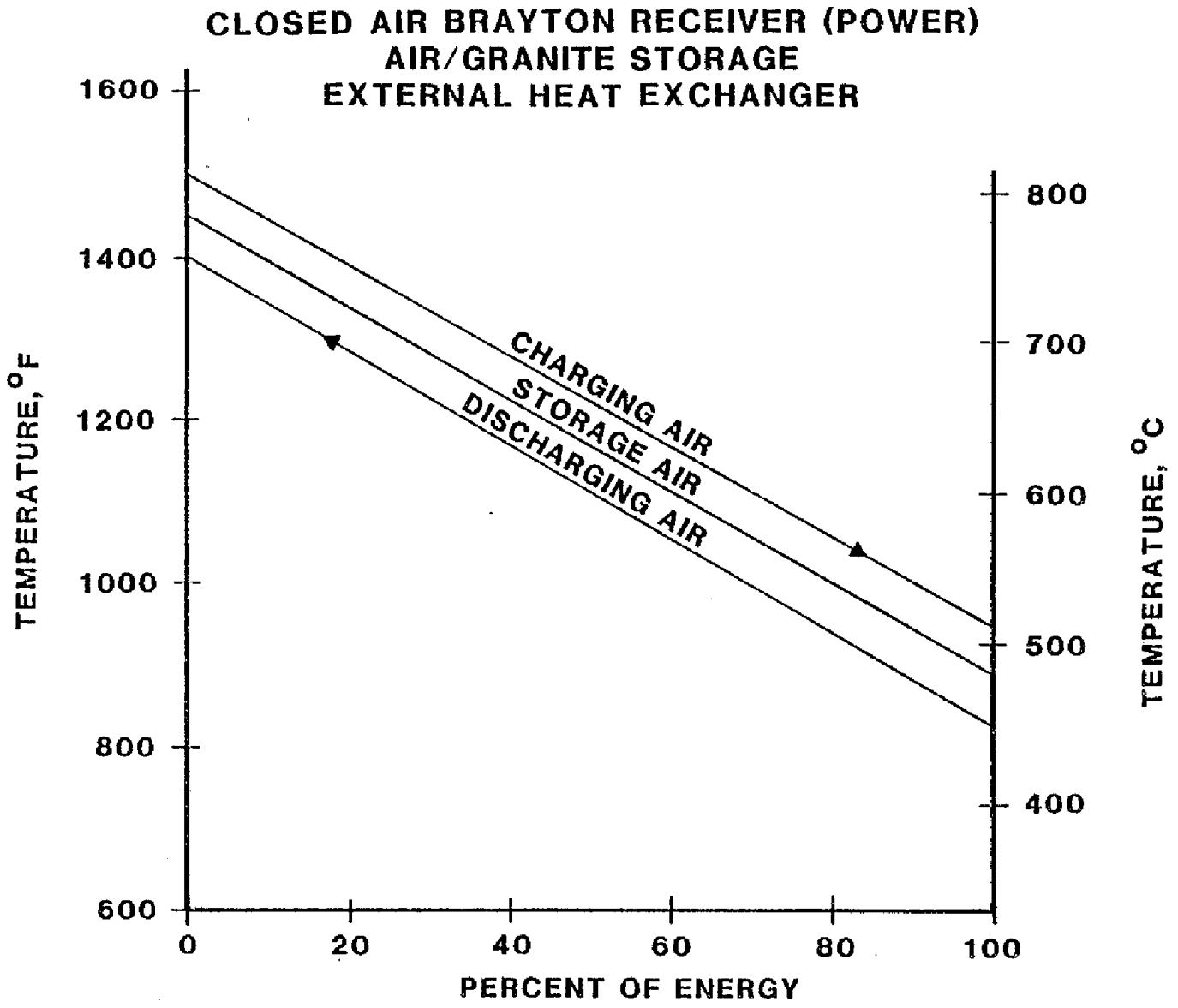

Figure 3–37. TEMPERATURE PROFILE
AIR/GRANITE (EXTERNAL HEAT EXCHANGER)

3.7.5.2 Thermal Storage Design Data

The conceptual design data for the air/granite external heat exchange storage system is shown in Tables 3-64, 3-65, and 3-66, for 1, 6 and 15 hours of storage, respectively.

3.7.5.3 Discussion

The air/granite concept as a test of external heat exchange storage systems does not compare favorably with the internal heat exchange concepts studied, the result being higher capital investment and higher operating costs. The two primary components, heat exchangers and fans, are very expensive items. The heat exchangers are large owing to the poor heat transfer coefficients associated with air-to-air heat exchange and costly due to the high alloy material (Incoloy 800H) required. The use of external heat exchangers will also result in poorer performance due to terminal temperature differences. The air temperature supplied to the turbine during discharging is 56°C (100°F) below rated.

The storage air circulating fans used in the study are of the axial flow vertical shaft type, reversible, with variable speed hydraulic coupling direct-connected to an electric motor drive. Such fans and drive components are commercially available for relatively low temperature applications, less than 260°C (500°F), but not for the 510°C (950°F) design temperature required for the Brayton cycle. Consequently the fans in this application must be considered to be a development item.

Table 3-64. THERMAL STORAGE DESIGN DATA
CLOSED AIR BRAYTON RECEIVER
AIR/GRANITE (EXTERNAL HEAT EXCHANGER)

[Totals for 2-75 MWe Gross Power Modules]

HOURS OF STORAGE: One (1)

		STAGE 1 OF 1 Air/Granite
STORAGE MEDIA		
1. Operating Temperature		
a. Hot	°C (°F)	788 (1,450)
b. Cold	°C (°F)	474 (886)
2. Quantity (Total)		
a. Granite	kg (ton)	31.30×10^6 (34,500)
ENERGY RELATED EQUIPMENT		
1. Storage Capacity	MW_th	360
2. Storage Tanks		
a. Quantity		Four (4)
b. Size, each	m(ft)	15.24 (50) x 60.96 (200) x 3.65 (12) Bed
c. Material		Concrete-Lined Excavation With Berms
d. Weight, each	kg (ton)	N/A
3. Tank Insulation		
a. Type		Refract. Brick-Insul. Conc. / Perlite (Roof)
b. Thickness	m (ft)	0.23 (0.75) - 0.76 (2.5) / 1.22 (4)
4. Tank Foundation		
a. Type		N/A
b. Thickness	m (ft)	
c. Quantity, Total	$m^3(yd^3)$	

		Charging	Discharging
POWER RELATED EQUIPMENT			
1. Receiver Fluid (Air)			
a. Flow, Total	kg/s (lb/hr)	188 (1.488×10^6)	-
b. Pressure	MPa (psia)	3.45 (500)	
c. Temperature	°C (°F)	816 (1,500)	
2. Storage Fluid (Air)			
a. Flow, Total	kg/s (lb/hr)	187.5 (1.49×10^6)	1,098 (8.71×10^6)
b. Pressure (Tanks)	MPa (psia)	Atmospheric	Atmospheric
c. Temperature	°C (°F)	474 (886) Cold	788 (1,450) Hot
3. Compressors/Fans[b]		Circ. Compr. / Circ. Fan	Circ. Fan (Governs Fan Design)
a. Quantity		2-50% / 11 Oper.	64 Oper.
b. Type		Centrifugal / -	Axial, Reversible
c. Material		Stainless Steel / -	2-1/4 Cr - 1 Mo
d. Fluid		Air / Air	Air
e. Capacity, each	m^3/s (acfm)	93.75 kg/s (0.744×10^6 lb/hr) / 36 (75,700)	37 (78,125)
f. Head	m(ft)	0.275 MPa (40 psi) / 0.63 (2.08) W.G.	0.78 (2.55) W.G.
g. Power (Shaft), each	kWe (hp)	2,085 (2,795) / 284 (381)	360 (482)
h. Motor size	kWe (hp)	2,238 (3,000) / -	373 (500)
4. Heat Exchangers[b]			(Governs HX Design)
a. Quantity		11 Oper.	64 Oper.
b. Type		-	Fin-Tube
c. Material		-	Incoloy 800H
d. Surface Area, Total	$m^2(ft^2)$	-	(Fin-Side) 0.265×10^6 (2.852×10^6)
e. Duty, Total	MW_e	60	360
ANNUAL ENERGY			
1. Electrical Energy	10^6kWeh	17.755[a]	9.34
2. Electrical Energy(Total)	10^6kWeh	27.095[a]	
3. Heat Loss (Total)	10^9J(10^9BTU)	23,759 (22.52)	

Notes:
[a]Annual Electrical Energy (Charging) Includes Circulation Compressor Power.

[b]Same Heat Exchangers and Fans Used for Charging and Discharging.

Table 3-65. THERMAL STORAGE DESIGN DATA
CLOSED AIR BRAYTON RECEIVER
AIR/GRANITE (EXTERNAL HEAT EXCHANGER)

(Totals for 2-75 MWe Gross Power Modules)

HOURS OF STORAGE: Six (6)

		STAGE 1 OF 1 Air/Granite	
STORAGE MEDIA			
1. Operating Temperature			
a. Hot	°C (°F)	788 (1,450)	
b. Cold	°C (°F)	474 (886)	
2. Quantity (Total)			
a. Granite	kg (ton)	1.81×10^8 (200,000)	
ENERGY RELATED EQUIPMENT			
1. Storage Capacity	MW_th	2,160	
2. Storage Tanks			
a. Quantity		Four (4)	
b. Size, each	m(ft)	23.77 (78) x 95.10 (312) x 7.62 (25) Bed	
c. Material		Concrete-Lined Excavation With Berms	
d. Weight, each	kg (ton)	N/A	
3. Tank Insulacion			
a. Type		Refract. Brick-Insul. Conc.	Perlite (Roof)
b. Thickness	m (ft)	0.23 (0.75) - 0.61 (2)	0.91 (3)
4. Tank Foundacion			
a. Type		N/A	
b. Thickness	m (ft)		
c. Quantity, Tocal	$m^3(yd^3)$		

		Charging		Discharging
POWER RELATED EQUIPMENT				
1. Receiver Fluid (Air)				
a. Flow, Total	kg/s (lb/hr)	1,125 (8.93×10^6)		-
b. Pressure	MPa (psia)	3.45 (500)		
c. Temperature	°C (°F)	816 (1,500)		
2. Storage Fluid (Air)				
a. Flow, Total	kg/s (lb/hr)	1,098 (8.71×10^6)		1,098 (8.71×10^6)
b. Pressure (Tanks)	MPa (psia)	Atmospheric		Atmospheric
c. Temperature	°C (°F)	474 (886) Cold		788 (1,450) Hot
				(Governs Fan Design)
3. Compressors/Fans[b]		Circ. Compr.	Circ. Fan	Circ. Fan
a. Quantity		2-50%	64 Oper.	64 Oper..
b. Type		Centrifugal	-	Axial, Reversible
c. Material		Stainless Steel	-	2-1/4 Cr - 1 Mo
d. Fluid		Air	Air	Air
e. Capacity, each	m^3/s (acfm) 563 kg/s	(4.465 x 10^6 lb/hr)	37 (78,125)	37 (78,125)
f. Head	MPa (psi)	0.275 MPa (40 psi)	0.72 (2.35) W.G.	0.72 (2.35) W.G.
g. Power (Shaft), each	kWe (hp)	12,510 (16,770)	344 (461)	344 (461)
h. Motor size	kWe (hp)	12,680 (17,000)	-	373 (500)
4. Heat Exchangers[b]				(Governs HX Design)
a. Quantity		64 Oper.		64 Oper.
b. Type		-		Fin-Tube
c. Material		-		Incoloy 800H
d. Surface Area, Total	$m^2(ft^2)$	-	(Fin-Side)	0.265 x 10^6 (2.852 x 10^6)
e. Ducy, Total	MW_t	360		360
ANNUAL ENERGY				
1. Electrical Energy	10^6kWeh	114.38[a]		53.5
2. Electrical Energy(Total)	10^6kWeh	167.88[a]		
3. Heat Loss (Total)	10^9J(10^9BTU)	83,146 (78.81)		

Notes:
[a]Annual Electrical Energy (Charging) Includes Circulation Compressor Power.

[b]Same Heat Exchangers and Fans Used for Charging and Discharging.

Table 3-66. THERMAL STORAGE DESIGN DATA
CLOSED AIR BRAYTON RECEIVER
AIR/GRANITE (EXTERNAL HEAT EXCHANGER)

(Totals for 2-75 MWe Gross Power Modules)

HOURS OF STORAGE: Fifteen (15)

		STAGE 1 OF 1 Air/Granite
STORAGE MEDIA		
1. Operating Temperature		
a. Hot	°C (°F)	788 (1,450)
b. Cold	°C (°F)	474 (886)
2. Quantity (Total)		
a. Granite	kg (ton)	428.9 x 10^6 (472,800)
ENERGY RELATED EQUIPMENT		
1. Storage Capacity	$MW_t h$	5,400
2. Storage Tanks		
a. Quantity		Four (4)
b. Size, each	m(ft)	38.71 (127) x 154.84 (508) x 7.62 (25) Bed
c. Material		Concrete-Lined Excavation With Berms
d. Weight, each	kg (ton)	N/A
3. Tank Insulation		
a. Type		Refract. Brick-Insul. Conc. / Perlite (Roof)
b. Thickness	m (ft)	0.23 (0.75) - 0.76 (2) / 0.91 (3)
4. Tank Foundation		
a. Type		N/A
b. Thickness	m (ft)	
c. Quantity, Total	$m^3(yd^3)$	

		Charging	Discharging
POWER RELATED EQUIPMENT			
1. Receiver Fluid (Air)			
a. Flow, Total	kg/s (lb/hr)	2,025 (16.075 x 10^6)	-
b. Pressure	MPa (psia)	3.45 (500)	
c. Temperature	°C (°F)	816 (1,500)	
2. Storage Fluid (Air)			
a. Flow, Total	kg/s (lb/hr)	1,975 (15.68 x 10^6)	1,098 (8.71 x 10^6)
b. Pressure (Tanks)	MPa (psia)	Atmospheric	Atmospheric
c. Temperature	°C (°F)	474 (886) Cold	788 (1,450) Hot
3. Compressors/Fans[b]		Circ. Compr.	(Governs Fan Design) Circ. Fan / Circ. Fan
a. Quantity		4-25%	120 Oper. / 64 Oper.
b. Type		Centrifugal	Axial, Reversible / -
c. Material		Stainless Steel	2-1/4 Cr - Mo / -
d. Fluid		Air	Air / Air
e. Capacity, each	m^3/s (acfm) 506 kg/s	(4.02 x 10^6 lb/hr)	35 (75,000) / 37 (78,125)
f. Head	MPa (psi)	0.275 MPa (40 psi)	0.65 (2.13) W.G. / 0.66 (2.17) W.G.
g. Power (Shaft), each	kWe (hp)	12,510 (16,769)	287 (385) / 305 (409)
h. Motor size	kWe (hp)	12,682 (17,000)	336 (450) / -
4. Heat Exchangers[b]			(Governs HX Design)
a. Quantity			120 Oper. / 64 Oper.
b. Type		-	Fin-Tube / -
c. Material		-	Incoloy 800H / -
d. Surface Area, Total	$m^2(ft^2)$		0.477x10^6 (5.13 x 10^6) / -
e. Duty, Total	MW_t		(Fin-Side) 648 / 360
ANNUAL ENERGY			
1. Electrical Energy	10^6kWeh	267.76[a]	118.8
2. Electrical Energy(Total)	10^6kWeh	385.56[a]	
3. Heat Loss (Total)	10^9J(10^9BTU)	167,608 (158.87)	

Notes:

[a] Annual Electrical Energy (Charging) Includes Circulation Compressor Power.

[b] Same Heat Exchangers and Fans Used for Charging and Discharging.

SECTION 4.0

COST ANALYSIS

4.1 SCOPE

This section presents the methodology used in costing and evaluating the various thermal storage concepts in solar thermal systems. Also presented are the capital cost and present worth summaries for each thermal storage concept carried through conceptual design for 1, 6 and 15 hours of storage.

4.2 METHODOLOGY

Capital cost estimates were prepared for each thermal storage concept using current material prices (June 1980), equipment cost estimates or budget quotations and construction cost factors based primarily on Stearns-Roger's experience in electric utility plant cost estimating and construction. The major items of each thermal storage concept for which cost estimates were prepared include the following:

- Energy Related Equipment (CE)
  - Tanks
  - Tank insulation and lagging
  - Tank foundations
  - Piping
- Power Related Equipment (CP)
  - Pumps/Compressors/Fans
  - Heat exchangers
- Storage Media (SC)
- Variable Costs (FYVC)
  - O&M
  - Energy
  - Chemical Usage
- Major Replacement Costs (RC)

The thermal storage concept costs do not include electrical work, controls and instrumentation and piping considered common to each storage concept.

Costs are expressed in June 1980 dollars and include material and equipment, field installation, indirect field costs and engineering (A/E).

4.2.1 Economic Factors

The economic factors used in the analysis are shown in Table 4-1.

Table 4-1. ECONOMIC FACTORS

[Cost Base: June 1980, Site: Albuquerque, New Mexico]

Minimum Acceptable Return	10%
Service Life	30 Years
Fixed Charge Rate	17%
Annual Escalation Rate	7%
Energy Cost	$\$0.035/kW_eh$

4.2.2 Construction Cost Factors

The methodology used in arriving at a total capital investment cost incorporated a number of cost factors or multipliers to convert fabricated material and factory equipment costs to direct field cost and total capital investment. These construction cost factors are based on Stearns-Roger's experience with similar construction and previous studies.

The cost equation used is as follows:

$$CI = 1.95\ [1.8\ (CE + CP) + MEDIA]$$

where:

CI = Capital Investment
CE = Energy related equipment cost
CP = Power related equipment cost
MEDIA = Media cost
1.8 = Multiplier on Equipment Cost to arrive at Direct Field Cost
1.95 = Multiplier on Direct Field Cost and Media to arrive at Total Capital Investment.

The 1.95 capital investment factor includes:

- Engineering (A/E)
- Interest during construction
- Fees, permits, state and local taxes
- Indirect field cost, including:
  - Field expense
  - Temporary facilities
  - Construction equipment
  - Payroll taxes, insurance
  - Performance Bonds
- Contingency allowance

For the purpose of this study it was assumed that the construction cost burdens used apply equally to all capital expenditures.

4.2.3. Operating and Maintenance (O&M) Cost

The operating and maintenance (O&M) cost used in the study is shown in Table 4-2. The O&M cost is expressed as a percentage of the capital investment, excluding storage media cost, and reflects, in Stearns-Roger's judgment, the complexity or maintenance requirements of a particular thermal storage concept. However, it will be shown that O&M cost is not of significant importance in the relative ranking of the storage concepts.

Table 4-2. O & M COST

The following O&M costs are expressed as a percentage of capital investment (CI).

Water/Steam Receiver - Power	
Caloria/Granite	3%
Underground Pressurized Water	2%
Underground Sol'n Mined, oil/rock	3%
Caloria 2-tank	3%
Tube Intensive HX	3%
Containerized Salt	3%
Direct Contact HX, 1st Stage	4%
Draw Salt 2-tank, 2nd stage	2%
Air/rock, 2nd stage	3%
Sand Moving Bed, 2nd stage	4%
Direct Contact HX, 2nd stage	2%
Water/Steam Receiver - Process Heat	
Caloria/Granite	3%
Underground Pressurized Water	2%
Containerized Salt	3%
Oil/Rock, Excavated Concrete Pit	3%
Organic Fluid Receiver	
Syltherm/Taconite (trickle charge)	3%
Molten Salt 2-tank	2%
Direct Contact HX, 1st stage	4%
Direct Contact HX, 2nd stage	2%
Closed Air Brayton Receiver	
Air/Alumina Brick	2%
Air/Cast Iron	2%
Air/Granite (external HX)	4%

4.2.4 Economic Method

The economic method used in evaluating the various thermal storage concepts is the present worth of revenue requiements (PWRR). The PWRR method has become the standard for the electric utility industry and other industries as well. The economic model used in this study is based on the methods of analysis outlined in the EPRI report PS-1201-SR, dated July 1979. [20]

The economic model gives the present worth of revenue requirements (PWRR) for each thermal storage concept. Those that have the lowest PWRR values are the most desirable economically.

Based on the various economic tables and assumed economic factors, the PWRR equation is:

PWRR = PWFC + PWVC + PWRC
where:
PWFC = Present worth of fixed costs
= 1.6 X (CI)
PWVC = Present worth of variable costs
= 20.1 X (FYVC)
PWRC = Present worth of replacement costs
= $\sum$ (Replacement Cost in x-th year) X $(P/F)_x$

Where $(P/F)_x$ = Series present worth factor for replacement year x.

It should be noted that the third term, PWRC, was not used in the study since no major replacement costs were identified for any thermal storage concept.

4.2.5 Cost Form

The cost form used in the thermal storage economic evaluation is included in Appendix B. This form was developed to provide the cost breakdown necessary to facilitate trade-offs of storage concepts by SERI.

4.3 UNIT PRICES

The material unit prices used in the study were developed from current industry prices for building materials, trade publications, vendors and the Stearns-Roger estimating department.

The unit prices for fabricated material such as tanks, pipe, concrete, insulation and lagging, and heat exchangers are shown in Table 4-3.

Chemical unit prices are shown in Table 4-4.

The solid storage media unit prices are shown in Table 4-5.

The fluid storage media unit prices are shown in Table 4-6. In the case of draw salt and HITEC, the unit prices shown are based on field mixing of raw materials rather than buying the heat transfer salt directly from various suppliers, which resulted in a significant cost saving.

Table 4-3. MATERIAL UNIT PRICES
(JUNE 1980)

Fabricated Material	Cost	Reference
Tanks		
A283 Gr. C Carbon Steel	$0.65/lb.	S-R
304 Stainless Steel	2.50/lb.	S-R
316 Stainless Steel	4.00/lb.	S-R
Incoloy 800	5.00/lb.	S-R
Concrete (Cylindrical)	95.00/yd^3	S-R
A516-70 Carbon Steel	0.75/lb.	S-R
Pipe		
A106 GR. B Carbon Steel	$0.50/lb.	S-R
A335 P22 CR-MO	2.00/lb.	S-R
304 Stainless Steel	2.15/lb.	S-R
316 Stainless Steel	3.65/lb.	S-R
Concrete		
Heavy Wall 18" Thick	$100/Yd^3	S-R
Light Wall 18" Thick	110/Yd^3	S-R
Slab on Grade	80/yd^3	S-R
Reinforced Mat	105/yd^3	S-R
Insulation		
Calcium Silicate 4" Thick	$4.18/ft^2	MacArthur & Co.
Mineral Fiber 4" Thick	2.33/ft^2	Plateau Supply
Fiberglass 4" Thick	0.88/ft^2	MacArthur & Co.
Lagging (Aluminum)	0.40/ft^2	Owens-Corning
Heat Exchangers		
Shell & Tube		
Carbon Steel	$20-25/ft^2	S-R
Chrome Moly	25-30/ft^2	S-R
Stainless Steel	35-40/ft^2	S-R
Finned-Tube (Air-Side)(Shell-Less)		
Carbon Steel	$2.00-2.50/ft^2	S-R
Chrome Moly	2.50-3.00/ft^2	S-R
Stainless Steel	3.50-4.00/ft^2	S-R

Table 4-4. CHEMICAL UNIT PRICES
(June 1980)

Chemical	Cost $/Ton	Reference
$NaOH$, Na_2CO_3 81.5%, 18.5% Wt	301	Chemical Marketing Reporter
$NaOH$, $NaNO_3$, MnO_2 91.8%, 8%, .2%, Wt.	335	"Thermkeep" (Comstock & Wescott) Chemical Marketing Reporter
$NaOH$	350	Chemical Marketing Reporter
$NaNO_3$	214	Olin Chemicals
$NaNO_3$, $NaOH$ 99%, 1%, Wt.	170	Chemical Marketing Reporter
$(Li\text{-}Na\text{-}K)_2\ CO_3$ 32%, 33%, 35% Wt.	940	Chemical Marketing Reporter
$(Li\text{-}Na\text{-}K)_2\ CO_3$ 1.21%, 49.95%, 48.84% Wt.	268	Chemical Marketing Reporter
Na_2CO_3, $BaCO_3$ 47.8%, 52.2% Wt.	216	Chemical Marketing Reporter
$MgCl_2$, $NaCl$, KCl 55%, 24.5%, 20.5% Wt.	83-370	NRL Estimate
$CaCl_2$	84	W/O Drying, Chem. Mark. Rept.
KCl	65	Chemical Marketing Reporter
$NaCl$	42.64	United Salt Corp.
KNO_2	600	DuPont
KNO_3	405	Vickburg Chemical
KF, NaF 67.5%, 32.5% Wt.	1240	Chemical Marketing Reporter
KOH	500	Chemical Marketing Reporter
Li_2CO_3	2410	Chemical Marketing Reporter
Li_2CO_3, $CaCO_3$ 55.7%, 44.3% Wt.	1429	Chemical Marketing Reporter
$NaCl$, Na_2CO_3 43%, 57% Wt.	68	Chemical Marketing Reporter
$CaCl_2$, $NaCl$ 68%, 32% Wt.	99	Chemical Marketing Reporter
$PbBi$ 44.5%, 55.5% Wt.	3400	Indium Corp.

Table 4-5. SOLID STORAGE MEDIA UNIT PRICES
(JUNE 1980)

Material	F.O.B Location[a]	Material Cost ($/Short Ton) Mat'l.	Freight	Total	Reference
River Rock	Albuquerque	7.30	.30	7.60	Albuquerque Gravel
Crushed Granite	Albuquerque	8.50	-	8.50	Red Mtn. Mining
Glass	Albuquerque	20	-	20	Coors Btl. Plant
Cast Iron (Gray)	Pueblo, Colo.	198.50	2.12	200.62	CF & I Steel
Meehanite Brick	Various Foundaries	1200	40	1240	S-R
Sand (SiO_2) Commmon	Albuquerque	7.40	.30	7.70	Albuquerque Gravel
Sand (SiO_2) Pulv.	Albuquerque	25.00	-	25.00	Texas Mining
MgO Brick (95.5%)	Albuquerque	1005	-	1005	Kaiser
Al_2O_3 Brick (95.1%)	Albuquerque	1500	-	1500	Kaiser
Taconite	Hibbing, Minn.	34	34.0	68	Hanna Mining
Coal Slag	Rapid City, S.D.	Free	7.62	7.62	S-R
Steel Mill Slag	Pueblo, Colo.	2.85	2.12	4.97	Fountain Sand

[a]Site: Albuquerque, New Mexico

Table 4-6. FLUID STORAGE MEDIA UNIT PRICES
(JUNE 1980)

Fluid	F.O.B Location[a]	Material Cost ($/Short Ton) Mat'l.	Freight	Total	Reference
Caloria HT 43	Houston	439	38	477	Exxon
Therminol 55	Houston	683	38	721	Monsanto
Therminol 66	Atlanta	2570	52	2662	Monsanto
Syltherm 800	Detroit	5600	82	5682	Dow Corning
Demin. Water	Albuquerque	0.48	0	0.48	S-R
Sodium	Albuquerque	1000	0	1000	Rockwell
Draw Salt[b] (60% $NaNO_3$, 40% KNO_3)		400	0	400	Vicksburg Chem. (KNO_3)
HITEC[b] (53% KNO_3, 40% $NaNO_2$, 7% $NaNO_3$)		550	0	550	Olin Chem ($NaNO_3$) DuPont ($NaNO_2$)

[a]Site: Albuquerque, New Mexico
[b]Based on Field Mixing of Raw Materials

4.4 FLUID REPLACEMENT

4.4.1 Operating Scenario

In order to establish fluid replacement rates for the many storage concepts evaluated,an operating scenario for the plant for 1,6 and 15 hours of storage was conceived to determine the amount of time that the fluid would be at its high temperature and the amount of time that the fluid would be at its low temperature during a normal day of operation. This information was necessary to the study because fluid loss rates increase exponentially with temperature as shown in Table 4-7, which is a summary of test results performed by V. Burolla at Sandia Laboratories (Livermore) [9, 18].

In developing the operating scenario, it was assumed that charging of the system would take place as early in the day as possible using any excess receiver capacity available and discharging would begin in the late afternoon as soon as the receiver could no longer maintain rated turbine-generator output. This charging philosophy would assume maximum possible charge, even on days with high cloud cover, but would subject the fluids to the high temperature condition for more hours per day than if charging was performed toward the end of the day. Discharging as needed to maintain rated plant output as mentioned above would merely extend plant operation, which is the primary objective of thermal storage. Power available from the receiver in MW_t as a function of solar time, was taken from "Central Receiver Solar Thermal Power System, Phase 1: Preliminary Design Report - Volume 5. Thermal Storage Subsystem, Figure III. B-2., April 1977" by Martin Marietta Corporation [21]. The figure was based on insolation data collected by the Aerospace Corporation at Inyokern, California, in 1963. Inyokern is located at nearly the same latitude as Albuquerque, New Mexico, so it was assumed that solar data collected at Inyokern would be representative of data collected at Albuquerque the assumed site for this study. Information used from the above mentioned figure consisted of reproducing the shape of the equinox curve so that it could be scaled up or down to conform to the various receiver sizes used in the study.

Figure 4-1 shows the assumed charging-discharging profiles for 1,6 and 15 hours of storage. The three curves shown were constructed using water/steam receiver data (i.e. water/steam EPGS rating and solar multiple) but were used to evaluate fluid loss rates on the organic fluid receiver as well. A check on the accuracy of this assumption showed the error to be negligible.

The area under each curve represents the number of percent-hours at high temperature experienced by the fluid. By evenly distributing each area over a 24 hour period, average percent values for 1,6 and 15 hours of storage were determined which were used in the fluid loss calculations. The fluid was assumed to be at its low temperature whenever it was not at its high temperature for 330 days per year (7920 hours per year). The remaining 35 days per year reflected plant down time with cooler fluid temperatures and negligible fluid losses.

Table 4-7. FLUID LOSS RATES

[Percent Per 2500 Hrs. By Weight]

Fluid	Loss Rate
Caloria HT-43	7% @ 316°C (600°F); 0.02% @ 246°C (475°F)
Caloria/Granite & Sand	27% @ 316°C (600°F); 4.2% @ 291°C (555°F); 0.06% @ 246°C (475°F)
Therminol 66	0.65% @ 319°C (607°F); 0.18% @ 301°C (574°F); 0.042% @ 281°C (538°F)
Therminol 66/Granite & Sand	5.7% @ 316°C (600°F); 1.0% @ 291°C (555°F); 0.02% @ 246°C (475°F)
Biphenyl	(Assumed Same as T-66)
Syltherm 800/Taconite	56% @ 399°C (750°F); 0.5% @ 260°C (500°F)
Syltherm 800/Taconite (Trickle Charge)	28% @ 399°C (750°F); 0.5% @ 260°C (500°F) (Assumed for Trickle Charge)
Draw Salt, HITEC	5% Per Year (Assumed)

Source: Sandia Labs - Livermore (Burolla), unless otherwise noted.

A-3.81.161

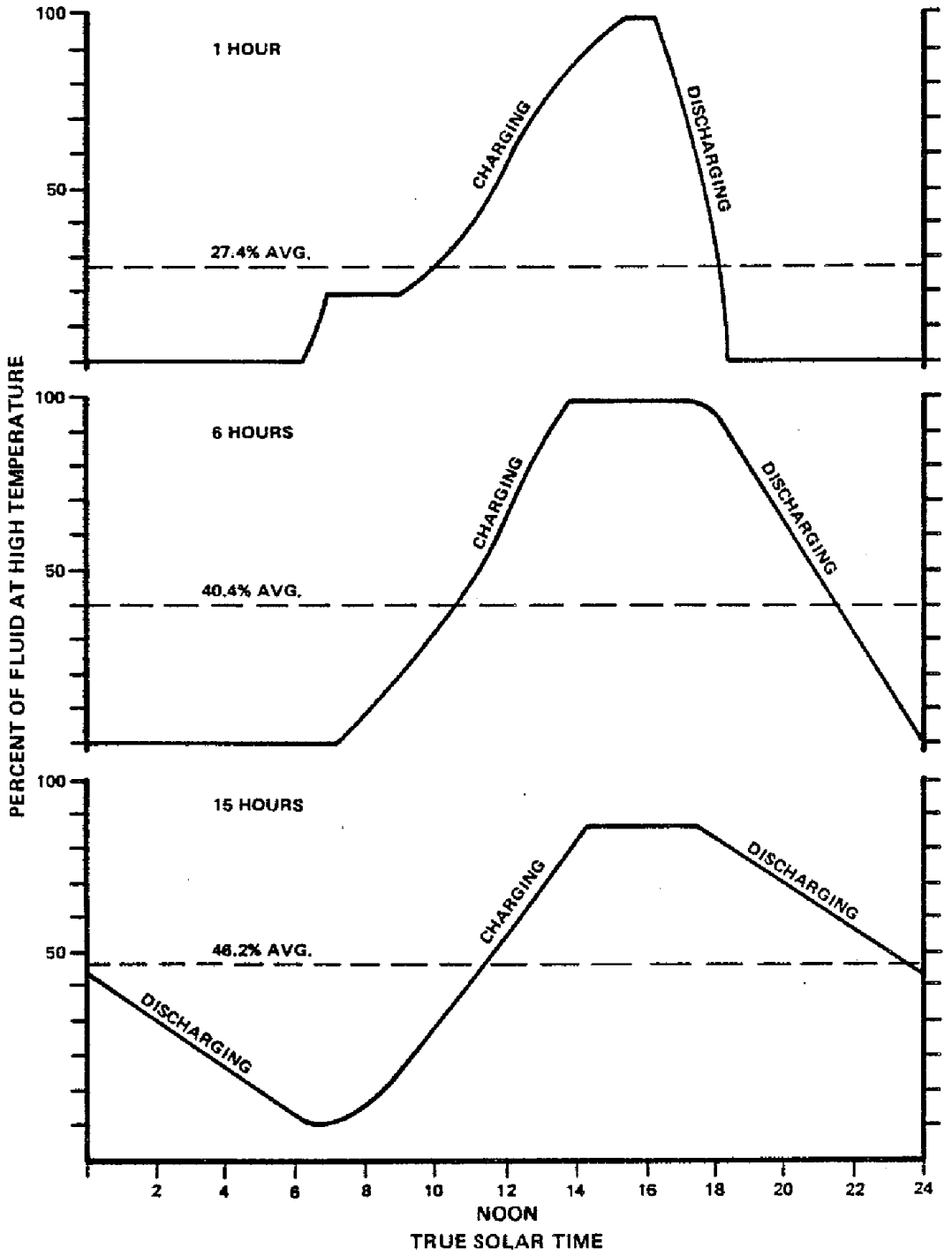

Figure 4—1. ASSUMED CHARGING/DISCHARGING PROFILES FOR 1, 6, AND 15 HOURS STORAGE

It should be noted that although the operating scenario developed for this evaluation may not accurately reflect the best operating mode for the system, it was believed to be an adequate foundation on which to base the fluid loss evaluation.

4.4.2 Yearly Fluid Loss Rates

Yearly losses for each fluid, in percent per year, were calculated using fluid loss rates per 2500 hr. in Table 4-7 and percent time values in Figure 4-1 for 1, 6 and 15 hours of storage. The results are plotted in Figure 4-2.

Table 4-7 is a summary of test results performed by Vic Burolla of Sandia Laboratories in Livermore, California [9, 18]. The testing was done in closed, N_2 pressurized containers with pressure relief valves set at 7-20 psig. Subsequent tests have incorporated more sophisticated equipment in an attempt to accurately model actual operation of a thermal storage system, but at the time of the writing of this report, no results had been reached.

The fluid storage media unit prices are shown in Table 4-6. In the case of draw salt and HITEC, the unit prices shown are based on field mixing of raw materials rather than buying the heat transfer salt directly from various suppliers, which resulted in a significant cost saving.

4.5 THERMAL STORAGE CONCEPT COSTS

The following presents the cost estimates for each thermal storage concept in each solar thermal system for 1, 6 and 15 hours of storage.

The cost tables show the cost breakdown in terms of energy related cost (CE), power related cost (CP), media, capital investment (CI), first year variable cost (FYVC) and present worth of revenue requirements (PWRR). Finally, cost curves are presented showing storage system unit capital investment and PWRR for 1 through 15 hours of storage.

A-1.81.111

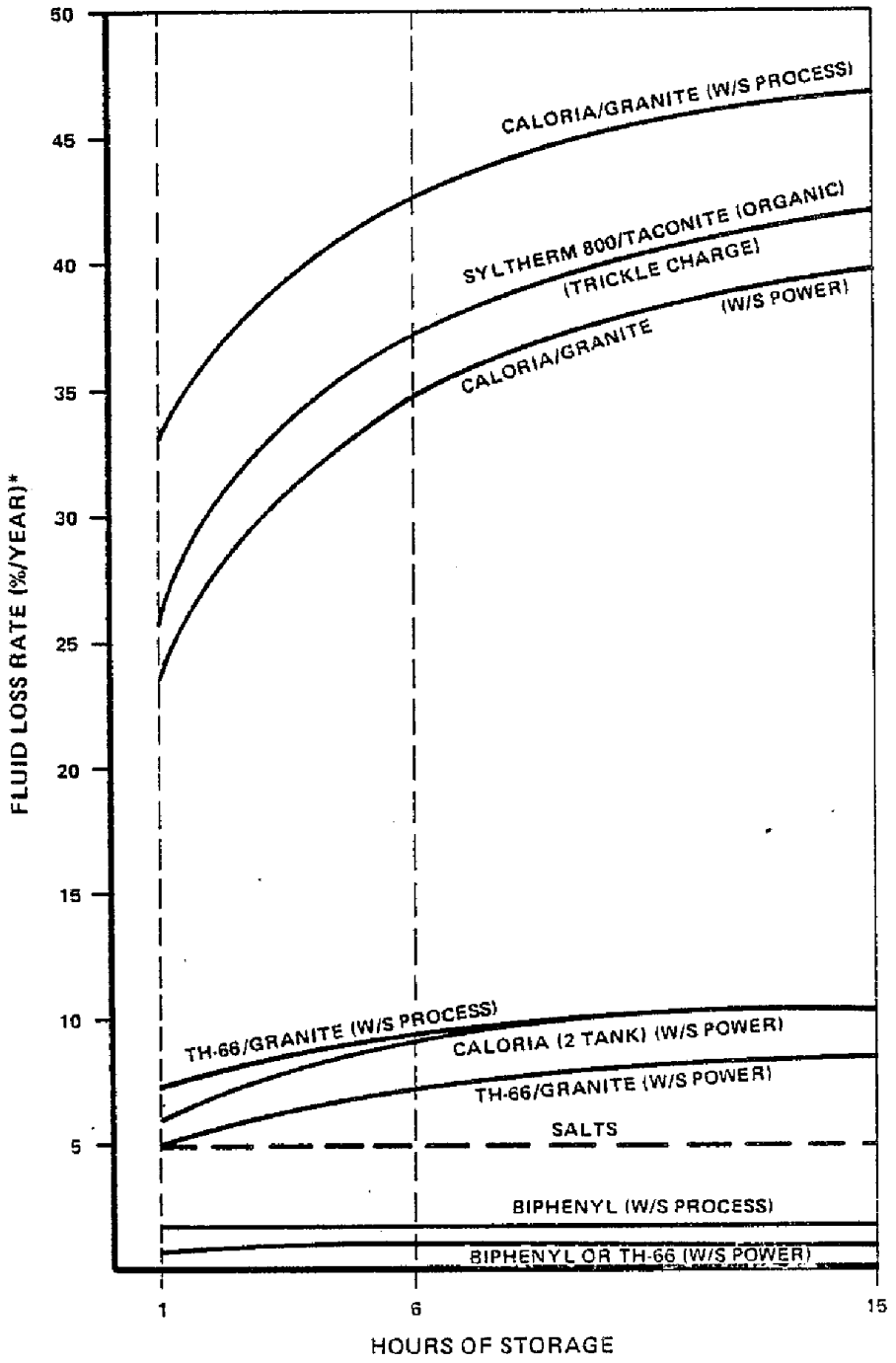

(*FULL YEAR)

Figure 4–2. FLUID LOSS RATE VS. THERMAL STORAGE CAPACITY

4.5.1 Water/Steam Receiver TES Concepts - Power

The cost summaries for the selected water/steam receiver storage system concepts for the power application are shown in Tables 4-8, 4-9, and 4-10 for 1, 6 and 15 hours of storage, respectively.

1-Hour Storage

For the 1 hour storage case, Table 4-8, the reference storage system, Caloria/granite - draw salt (2 tank) comination, has the lowest capital investment and lowest PWRR, followed closely by Caloria/granite - sand moving bed and Caloria (2 tank) - draw salt (2 tank).

The experiment on first stage concepts shows that the reference Caloria/granite concept results in the lowest PWRR followed by Caloria (2 tank) and above ground pressurized water. While the experiment on second stage concepts indicates that the reference draw salt (2 tank) concept is most economical.

Of the latent storage concepts the containerized salt concept has the lowest PWRR for 1-hour storage.

As expected, underground pressurized water storage is very uneconomical in small storage capacities owing to its high initial investment.

6-Hour Storage

For the 6 hour storage case, Table 4-9, the best storage concept combinations in terms of lowest PWRR are underground pressurized water - draw salt (2 tank), Caloria/granite - draw salt (2 tank) and the 2-stage direct contact latent heat system.

The second stage experiment indicates that the draw salt (2 tank) concept is the best choice. The experiment on first stage concepts shows underground pressurized water and Caloria/granite to be competitive.

Above ground pressurized water, while reasonably economical for 1-hour storage, is very uneconomical for 6-hours storage owing to high containment cost.

15-Hour Storage

For the 15 hour case, Table 4-10, the storage systems having the lowest total evaluated cost are underground pressurized water-draw salt (2 tank), 2-stage direct contact (latent/sensible), and Caloria/granite-draw salt (2 tank).

Underground pressurized water storage looks very attractive for large storage capacities, owing to a large degree the media degradation cost chargable to the Caloria/granite concept. The draw salt (2 tank) storage concept remains the best second stage choice.

Table 4–8. THERMAL STORAGE ECONOMIC EVALUATION
WATER/STEAM RECEIVER (POWER)
[1 HOUR STORAGE]

STORAGE CONCEPT		COST $1,000 (1980)					
1ST STAGE	2ND STAGE	CE	CP	MEDIA	CI	FYVC	PWRR
CALORIA/GRANITE (REFERENCE)	DRAW SALT (2 TANK)	762	3,147	844	15,366	520	35,037
CALORIA/GRANITE	AIR/GRANITE	1,614	5,787	690	27,268	997	63,669
CALORIA/GRANITE	SAND, MOVING BED	1,033	3,300	625	16,427	679	39,931
UNDERGROUND PRES. H_2O	DRAW SALT (2 TANK)	15,102	1,409	249	35,960	756	72,732
ABOVE GROUND PRES. H_2O	DRAW SALT (2 TANK)	4,459	1,409	249	21,082	458	42,937
UNDERGROUND OIL/ROCK (SOLN MINED)	DRAW SALT (2 TANK)	6,875	3,150	1,101	26,982	841	60,082
CALORIA (2 TANK)	DRAW SALT (2 TANK)	1,036	3,147	1,952	18,490	529	40,217
TUBE INTENSIVE HX	DRAW SALT (2 TANK)	1,105	9,545	3,149	43,521	1,151	92,765
CONTAINERIZED SALT	DRAW SALT (2 TANK)	1,579	2,991	2,699	21,302	462	43,368
DIRECT CONTACT (PHASE CHANGE)	PHASE CHANGE MEDIA	265	3,014	5,758	22,741	556	47,554

Table 4–9. THERMAL STORAGE ECONOMIC EVALUATION
WATER/STEAM RECEIVER (POWER)
[6 HOUR STORAGE]

STORAGE CONCEPT		COST $1,000 (1980)					
1ST STAGE	2ND STAGE	CE	CP	MEDIA	CI	FYVC	PWRR
CALORIA/GRANITE (REFERENCE)	DRAW SALT (2 TANK)	3,529	5,308	5,055	40,874	2,166	108,935
CALORIA/GRANITE	AIR/GRANITE	4,436	6,653	4,052	46,586	2,682	128,411
CALORIA/GRANITE	SAND, MOVING BED	5,392	5,749	3,739	46,394	2,633	127,153
UNDERGROUND PRES. H_2O	DRAW SALT (2 TANK)	17,880	2,578	1,492	49,820	1,210	104,033
ABOVE GROUND PRES. H_2O	DRAW SALT (2 TANK)	25,988	2,578	1,492	103,176	2,277	210,849
UNDERGROUND OIL/ROCK (SOLN MINED)	DRAW SALT (2 TANK)	9,692	5,335	5,000	48,722	2,265	123,476
CALORIA (2 TANK)	DRAW SALT (2 TANK)	5,374	5,308	11,707	60,323	2,185	140,436
TUBE INTENSIVE HX	DRAW SALT (2 TANK)	2,468	13,962	6,911	71,148	2,102	156,073
CONTAINERIZED SALT	DRAW SALT (2 TANK)	4,953	6,858	9,387	59,763	1,347	122,694
DIRECT CONTACT (PHASE CHANGE)	PHASE CHANGE MEDIA	1,213	6,401	9,833	45,901	1,958	112,792

Table 4–10. THERMAL STORAGE ECONOMIC EVALUATION
WATER/STEAM RECEIVER (POWER)
[15 HOUR STORAGE]

STORAGE CONCEPT		COST $1,000 (1980)					
1ST STAGE	2ND STAGE	CE	CP	MEDIA	CI	FYVC	PWRR
CALORIA/GRANITE (REFERENCE)	DRAW SALT (2 TANK)	8,905	7,511	12,656	82,298	5,299	238,187
CALORIA/GRANITE	AIR/GRANITE	10,475	11,055	10,051	94,689	6,438	280,824
CALORIA/GRANITE	SAND, MOVING BED	11,258	8,630	9,361	88,095	6,061	262,778
UNDERGROUND PRES. H_2O	DRAW SALT (2 TANK)	22,587	3,760	3,736	70,504	1,931	151,619
ABOVE GROUND PRES. H_2O	DRAW SALT (2 TANK)						
UNDERGROUND OIL/ROCK (SOLN MINED)	DRAW SALT (2 TANK)	17,278	7,536	12,159	87,135	5,057	241,063
CALORIA (2 TANK)	DRAW SALT (2 TANK)	11,635	7,511	29,273	124,283	5,088	301,122
TUBE INTENSIVE HX	DRAW SALT (2 TANK)	6,057	22,938	16,808	134,548	4,070	297,068
CONTAINERIZED SALT	DRAW SALT (2 TANK)	11,204	10,853	21,070	118,504	2,670	243,281
DIRECT CONTACT (PHASE CHANGE)	PHASE CHANGE MEDIA	2,380	9,899	17,072	76,390	4,065	203,929

Above ground pressurized water was not calculated for the 15 hour case.

The unit capital investment vs. hours of storage for the water/steam (power) storage concepts is shown in Figure 4-3. Unit capital investment is defined as the capital investment, CI, divided by the storage capacity, kW_th.

As indicated in the plots, the reference thermal storage system requires the lowest capital investment of the concepts considered below approximately ten hours of storage. Above approximately ten hours of storage both underground pressurized water and the direct contact latent system show a slight cost advantage over the reference system.

The present worth of revenue requirements (PWRR) vs. storage time for the water steam (power) storage concepts is shown in Figure 4-4. On an evaluated bases none of the alternate storage concepts show a cost advantage over the reference system below approximately six hours of storage. Above approximately six hours storage, underground pressurized water is the best economic alternative followed by the 2-stage direct contact latent system.

Of the 2-stage latent heat concepts considered, the direct contact first stage followed by a sensible heat second stage using the phase change media is the most economical above approximtely three hours storage. Below three hours, the containerized salt first stage with draw salt (2 tank) second stage shows a slight cost advantage. The tube intensive latent heat concept is economically unattractive regardless of storage time considered. Although not apparent from the curves, if a draw salt (2 tank) second storage were substituted on the direct contact system (replacing the 2nd stage single tank using the PCM) the PWRR would be close to the containerized salt - draw salt (2 tank) system.

4.5.2 Water/Steam Receiver TES Concepts - Process Heat

The thermal storage cost summaries for the water/steam receiver process heat applications are shown in Table 4-11. For the 1-hour storage case, the Caloria/granite thermocline with a concrete pit containment resulted in the lowest capital investment and lowest present worth of the concepts considered. Above 6-hours storage, underground pressurized water in a steel-lined cavern is the best economic choice. Because of the large storage volumes required for this process heat application, the cost of the media is a significant item along with the media replacement cost.

The unit capital investment in $\$/kW_th$ vs hours of storage is shown in Figure 4-5.

The present worth of revenue requirements vs hours of storage is indicated in Figure 4-6.

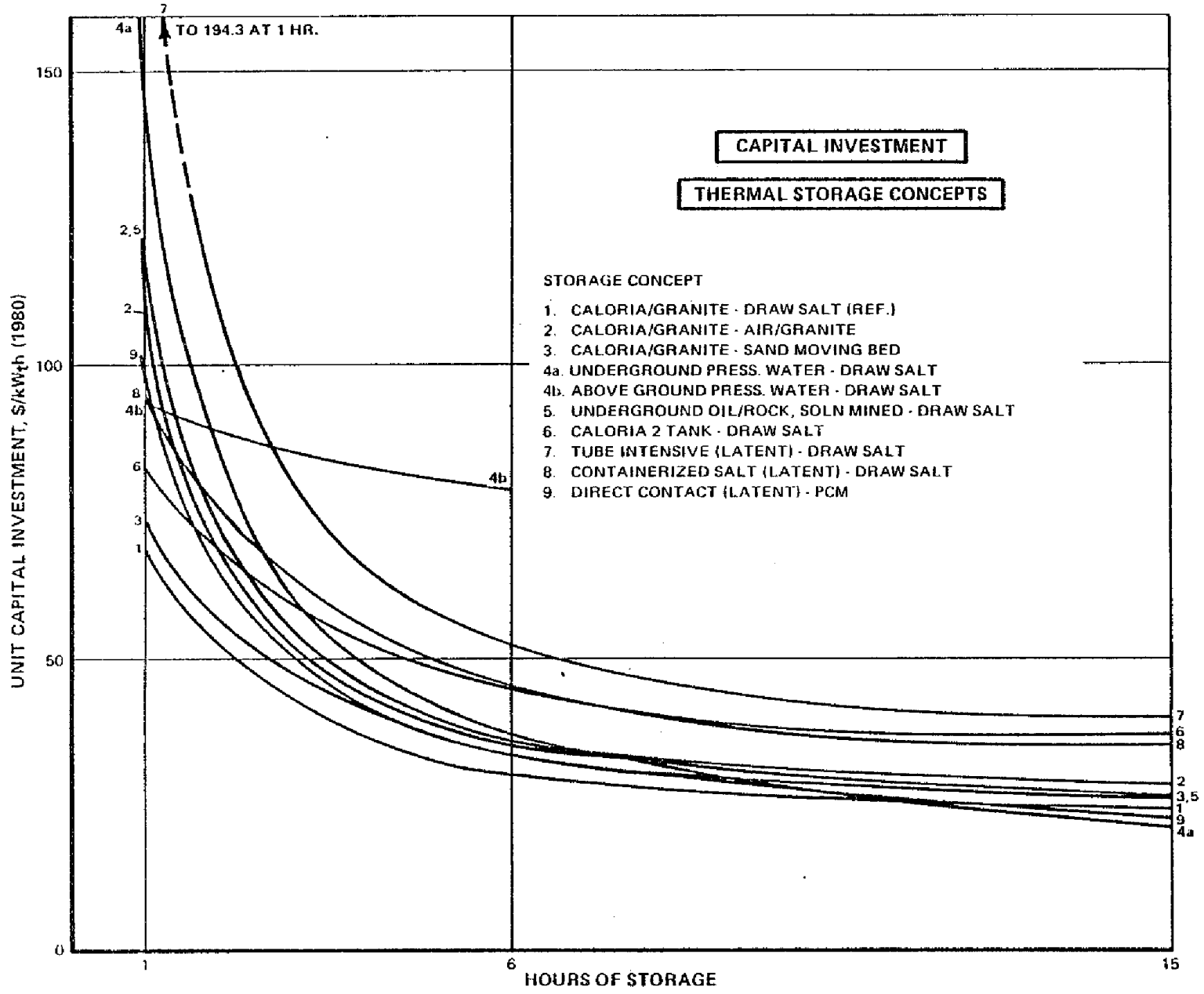

Figure 4–3. UNIT CAPITAL INVESTMENT, WATER/STEAM RECEIVER (POWER)

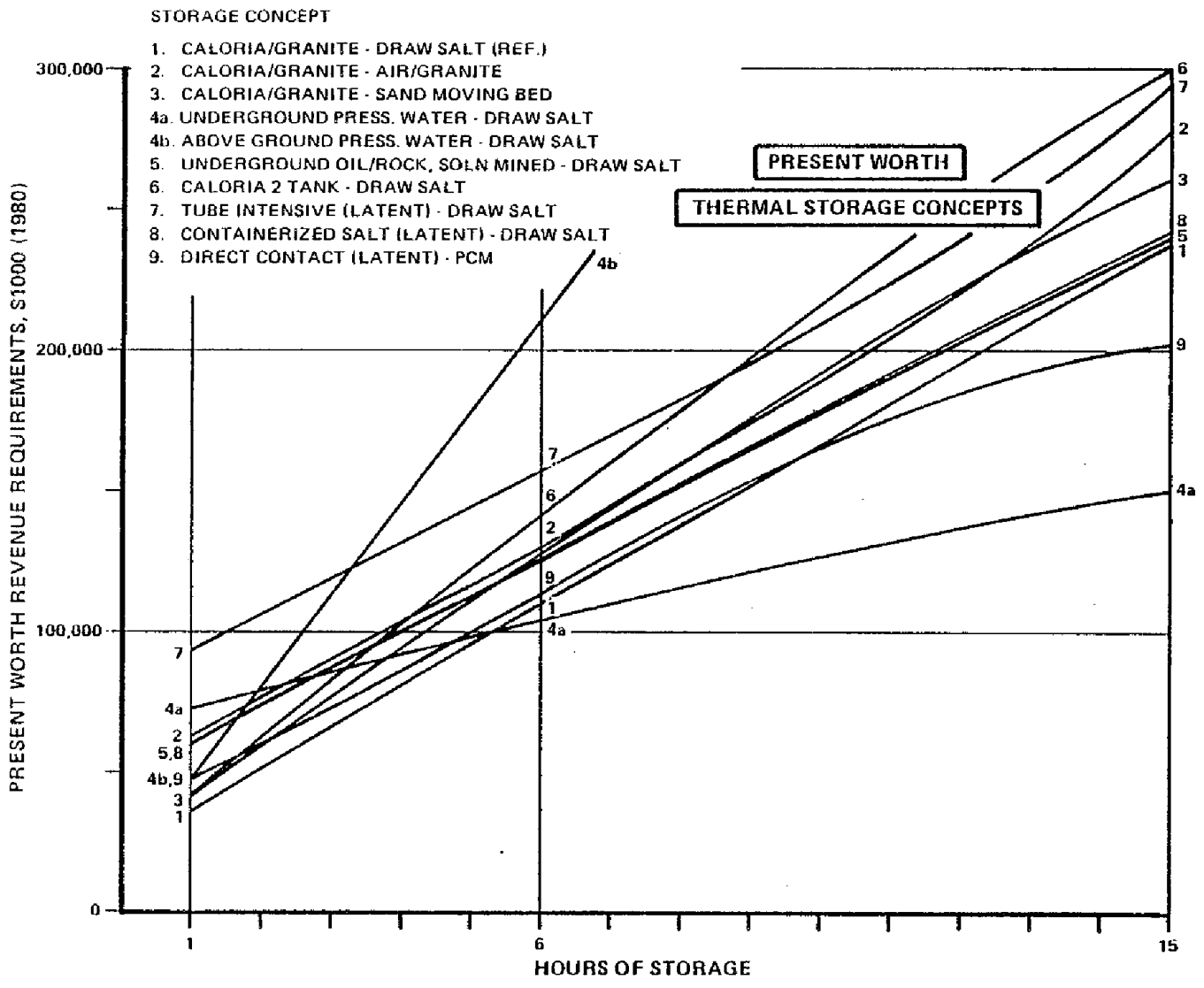

Figure 4—4. PRESENT WORTH REVENUE REQUIREMENTS, WATER/STEAM RECEIVER (POWER)

Table 4–11. THERMAL STORAGE ECONOMIC EVALUATION
WATER/STEAM RECEIVER (PROCESS HEAT)

STORAGE CONCEPT	STORAGE HOURS	COST $1,000 (1980)					
		CE	CP	MEDIA	CI	FYVC	PWRR
CALORIA/GRANITE THERMOCLINE (REFERENCE)	1	1,603	3,845	1,883	22,794	1,173	60,037
	6	8,803	7,904	11,297	80,671	6,312	255,941
	15	22,006	12,087	28,244	174,742	16,028	601,740
UNDERGROUND PRES. H_2O (STEEL-LINED CAVERN)	1	15,498	162	1	31,705	668	64,159
	6	20,482	642	6	44,543	1,105	93,480
	15	28,919	1,008	15	64,076	1,824	139,188
CALORIA/GRANITE THERMOCLINE (CONCRETE PIT)	1	1,128	3,845	1,883	20,933	1,117	55,937
	6	5,976	7,904	11,297	69,675	5,982	231,716
	15	14,092	12,087	28,244	144,343	15,116	534,771
CONTAINERIZED SALT	1	4,277	3,718	4,878	35,573	874	77,685
	6	10,316	7,737	14,374	91,392	2,092	188,277
	15	18,912	11,891	27,634	162,006	3,737	334,317

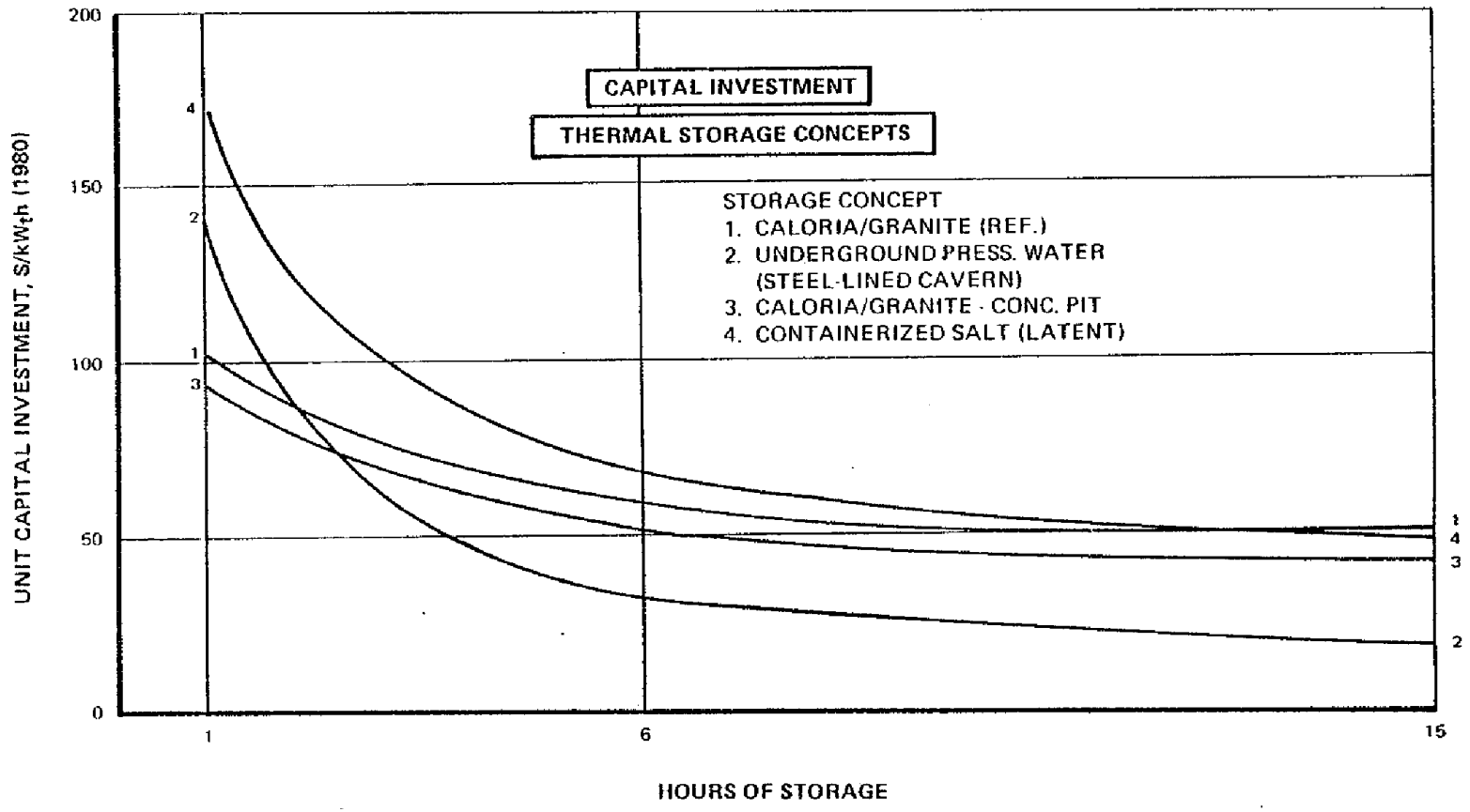

Figure 4—5. UNIT CAPITAL INVESTMENT, WATER/STEAM RECEIVER (PROCESS HEAT)

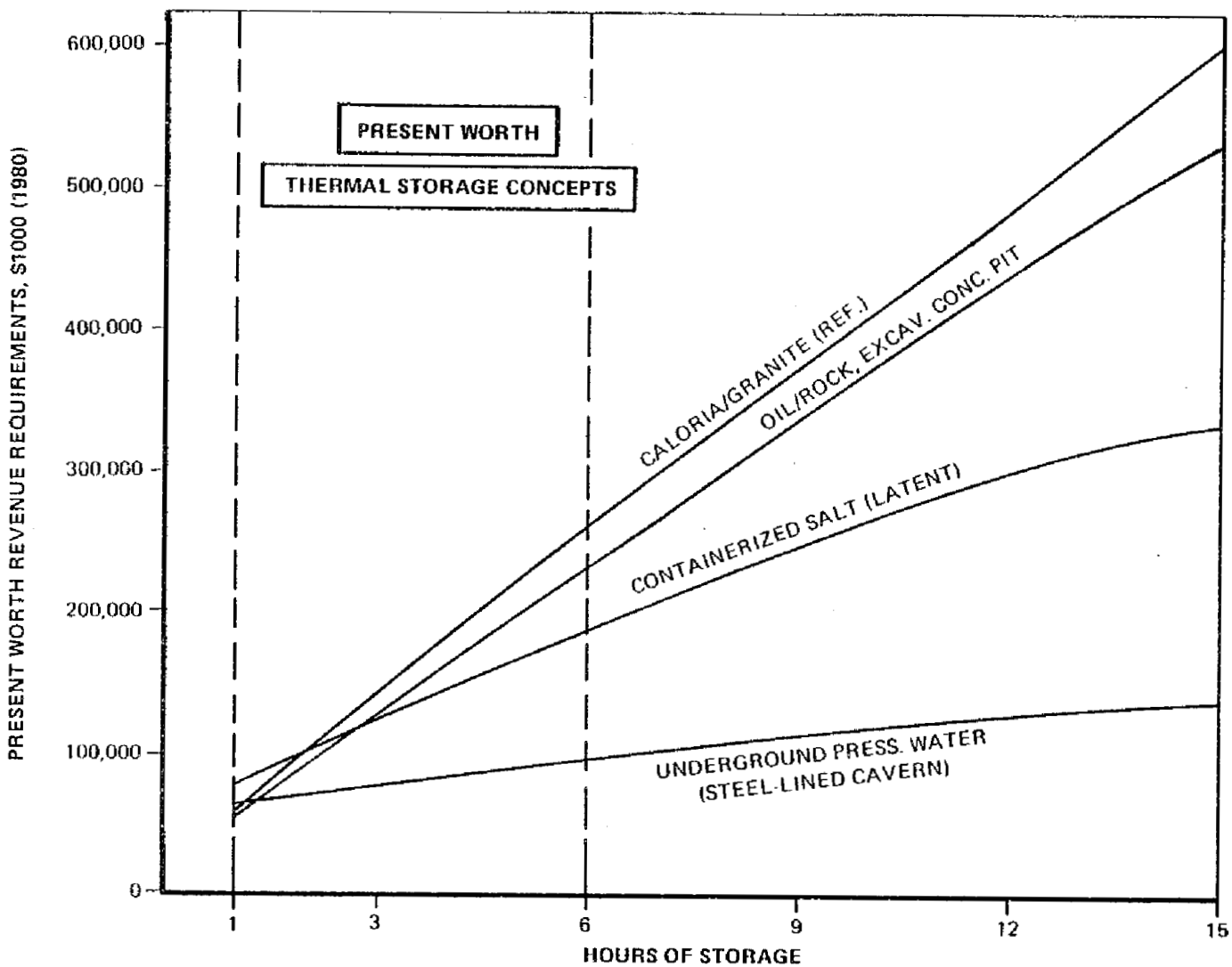

Figure 4—6. PRESENT WORTH REVENUE REQUIREMENTS, WATER/STEAM RECEIVER (PROCESS HEAT)

4.5.3 Organic Fluid Receiver TES Concepts - Power

The cost estimate summary for the organic (Syltherm 800) fluid receiver storage systems is shown in Table 4-12. As indicated in Table 4-12, the reference Syltherm/taconite (trickle charge) storage concept has the lowest capital investment and PWRR for 1 and 6 hours of storage, primarily due to its lower power related costs (heat exchangers and pumps). At 15 hours storage, the direct contact phase change, 2-stage storage system shows a higher capital investment but lower evaluated cost than the reference system, owing to the high cost of Syltherm-800.

As indicated in Figure 4-7, unit capital cost vs. hours of storage favors the Syltherm/taconite storage concept. However, on a present worth basis, both the direct contact (latent) 2-stage system and the HITEC (2 tank) are lower cost for storage times exceeding about 8 hours, as shown in Figure 4-8.

4.5.4 Closed Air Brayton Receiver TES Concepts

Table 4-13 shows the cost summary for the closed air Brayton receiver thermal storage concepts. As indicated, the cast iron storage media resulted in a slightly lower capital investment over the reference alumina brick. The air/granite storage concept is a very uneconomical alternative due to its high capital investment in heat exchangers and fans in addition to high energy costs (fan power). Included in the energy related cost (CE term) in the air/rock system is the cost of the support cylinders for the fan and heat exchanger modules, upper and lower air distribution ducts, storage media and containment.

Figure 4-9 shows the unit capital investment vs hours of storage for the three storage concepts for the closed air Brayton cycle.

The present worth of revenue requirements vs. hours of storage is shown in Figure 4-10. The curves indicate that nothing has been identified with significantly more promise than the reference air/alumina brick storage concept.

Table 4–12. THERMAL STORAGE ECONOMIC EVALUATION
ORGANIC (SYLTHERM 800) FLUID RECEIVER

STORAGE CONCEPT	STORAGE HOURS	COST $1,000 (1980)					
		CE	CP	MEDIA	CI	FYVC	PWRR
SYLTHERM/TACONITE (REFERENCE)	1	24	26	24	223	10	563
	6	57	27	145	578	53	1,985
↓	15	102	27	362	1,159	135	4,575
HITEC (SALT) - 2 TANK	1	34	90	27	487	10	988
↓	6	78	125	161	1,026	24	2,133
	15	139	158	402	1,825	46	3,850
DIRECT CONTACT PHASE CHANGE (2 STAGE LATENT AND SENSIBLE)	1	50	125	78	766	24	1,709
	6	91	162	115	1,113	42	2,624
	15	116	198	183	1,456	64	3,623

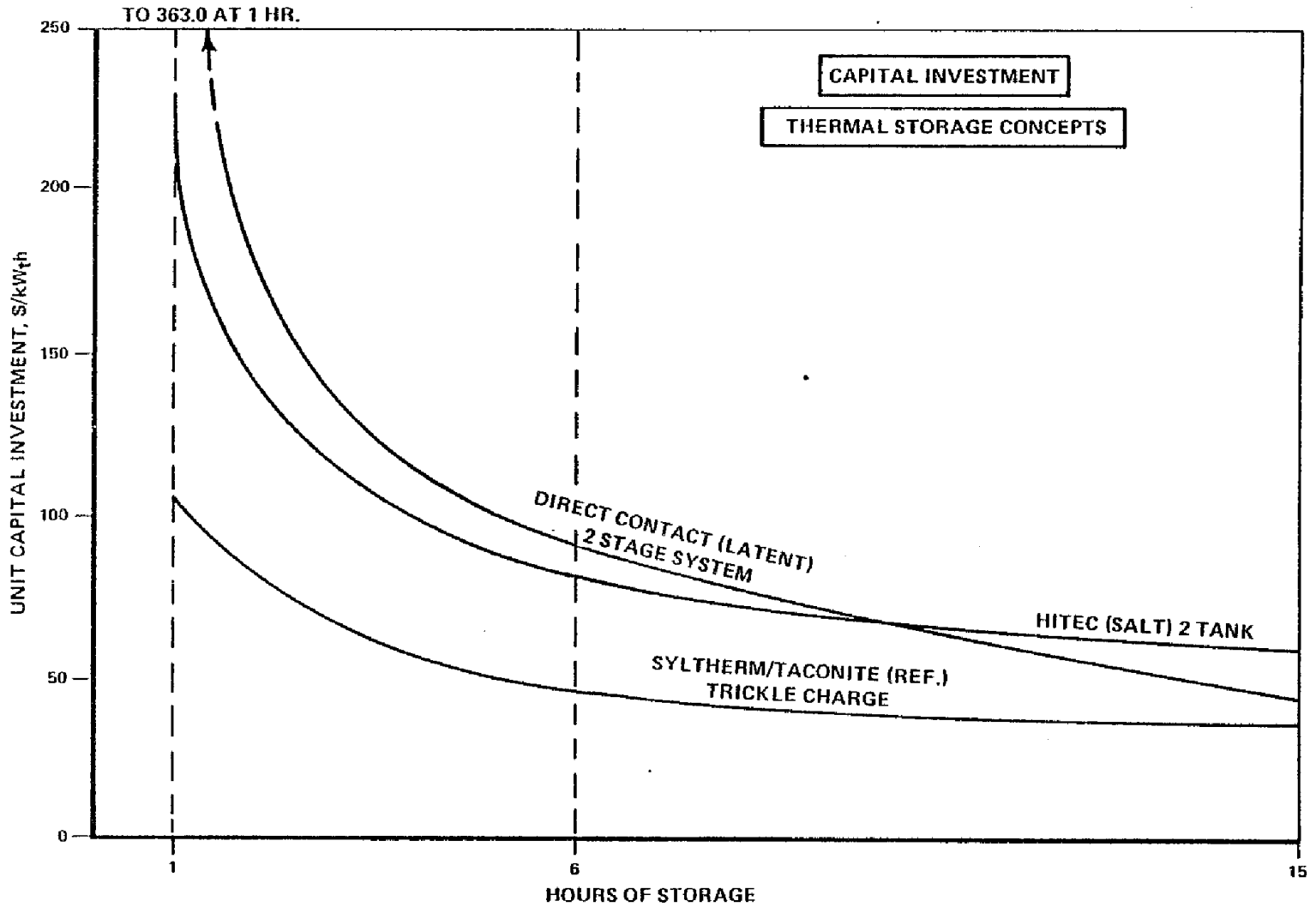

Figure 4–7. UNIT CAPITAL INVESTMENT, ORGANIC (SYLTHERM 800) FLUID RECEIVER (POWER)

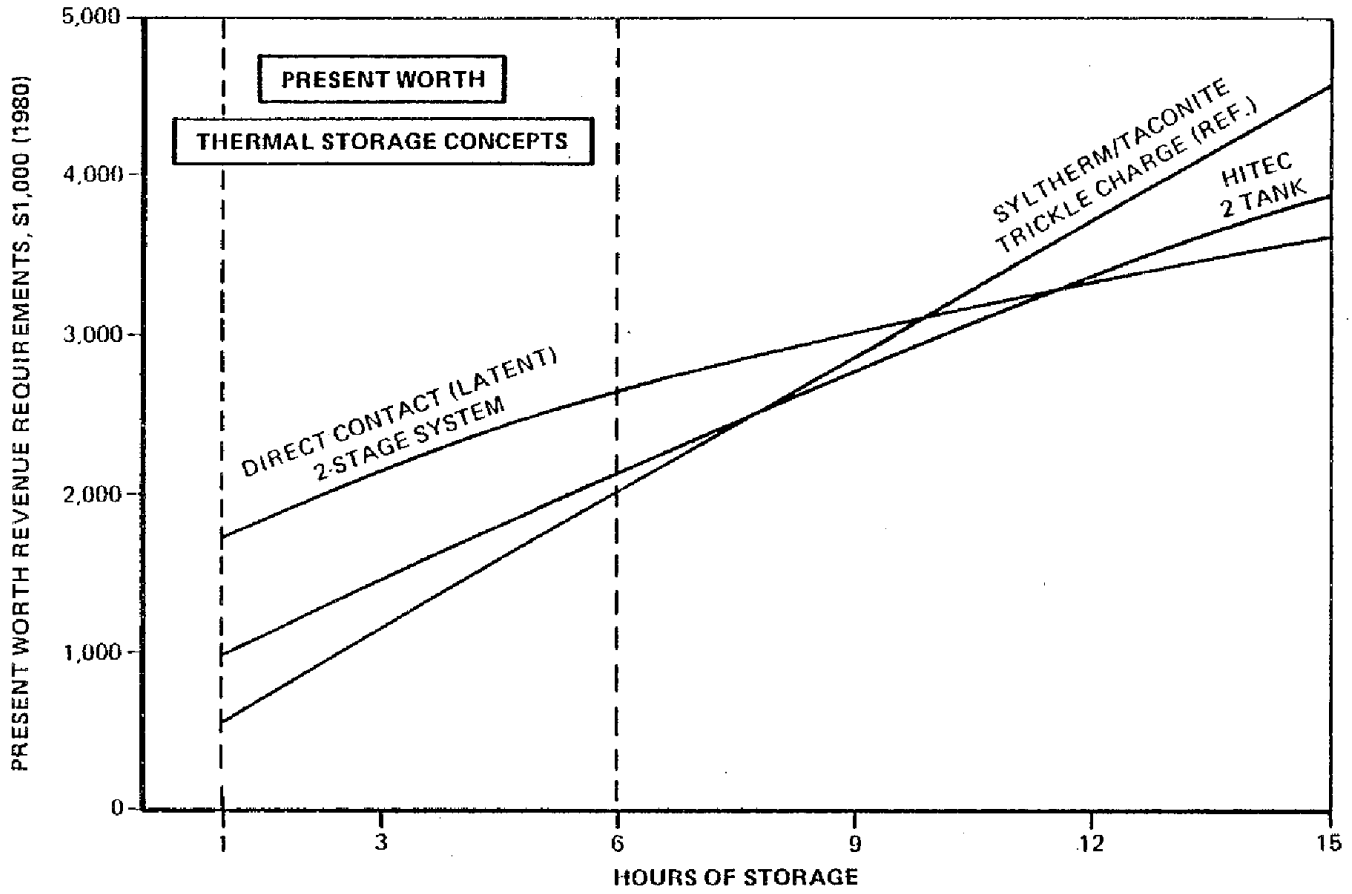

Figure 4–8. PRESENT WORTH REVENUE REQUIREMENTS, ORGANIC FLUID RECEIVER (POWER)

Table 4–13. THERMAL STORAGE ECONOMIC EVALUATION
CLOSED AIR BRAYTON RECEIVER (POWER)

STORAGE CONCEPT	STORAGE HOURS	COST $1,000 (1980)					
		CE	CP	MEDIA	CI	FYVC	PWRR
AIR/ALUMINA BRICK (REFERENCE) (INTERNAL HEAT TRANSFER)	1	2,914	435	6,014	23,482	519	48,003
	6	14,498	1,766	36,083	127,448	2,847	261,142
	15	35,937	3,447	90,190	314,108	7,014	643,554
AIR/CAST IRON (MEEHANITE) (INTERNAL HEAT TRANSFER)	1	2,068	435	7,283	22,987	460	46,025
	6	10,111	1,766	43,716	126,935	2,539	254,130
	15	25,155	3,447	109,269	313,468	6,257	627,315
AIR/GRANITE (EXTERNAL HEAT TRANSFER)	1	8,484	45,763	293	190,696	8,553	477,030
	6	17,200	47,365	1,700	228,764	14,894	665,391
	15	31,885	86,639	4,019	421,693	30,048	1,278,700

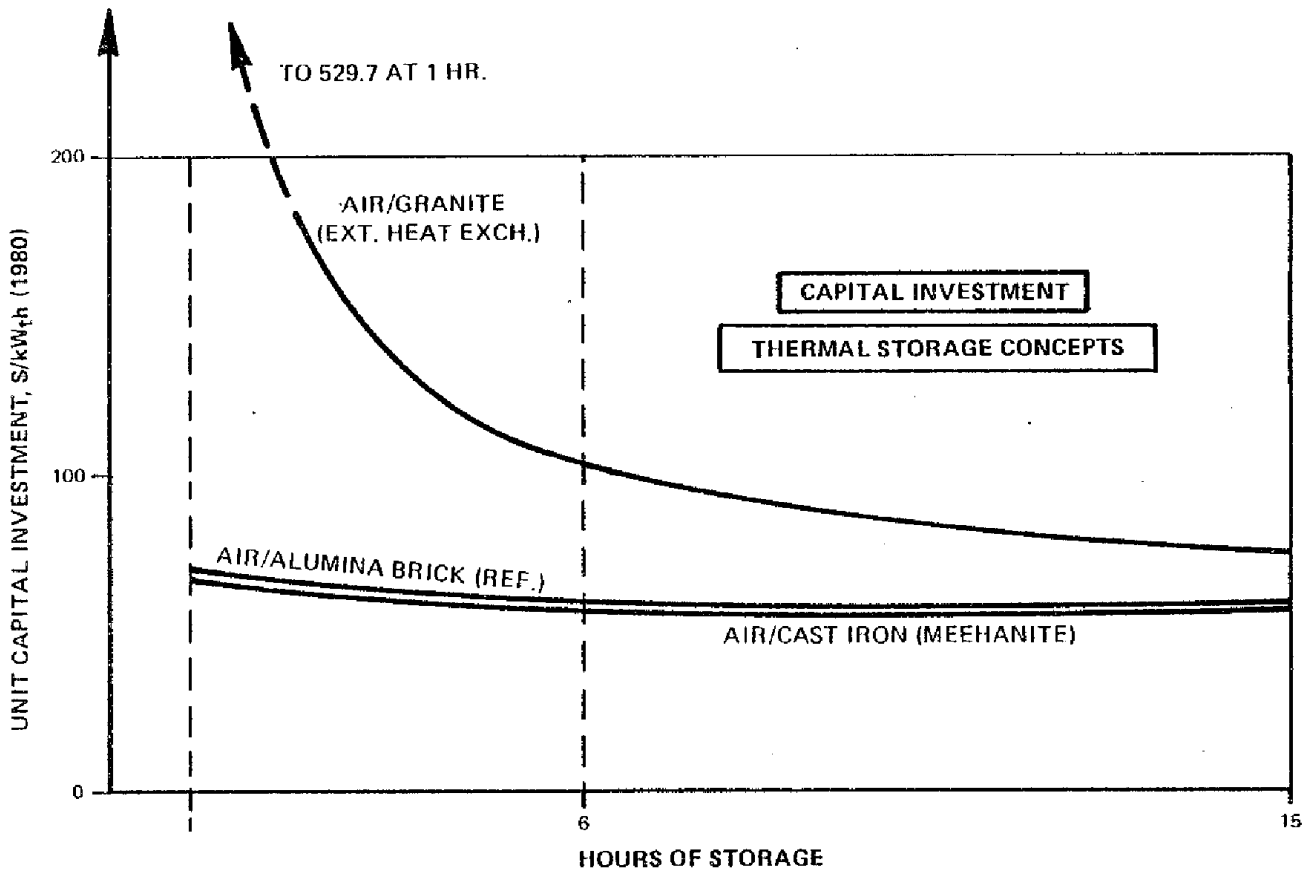

Figure 4–9. UNIT CAPITAL INVESTMENT, CLOSED AIR BRAYTON RECEIVER (POWER)

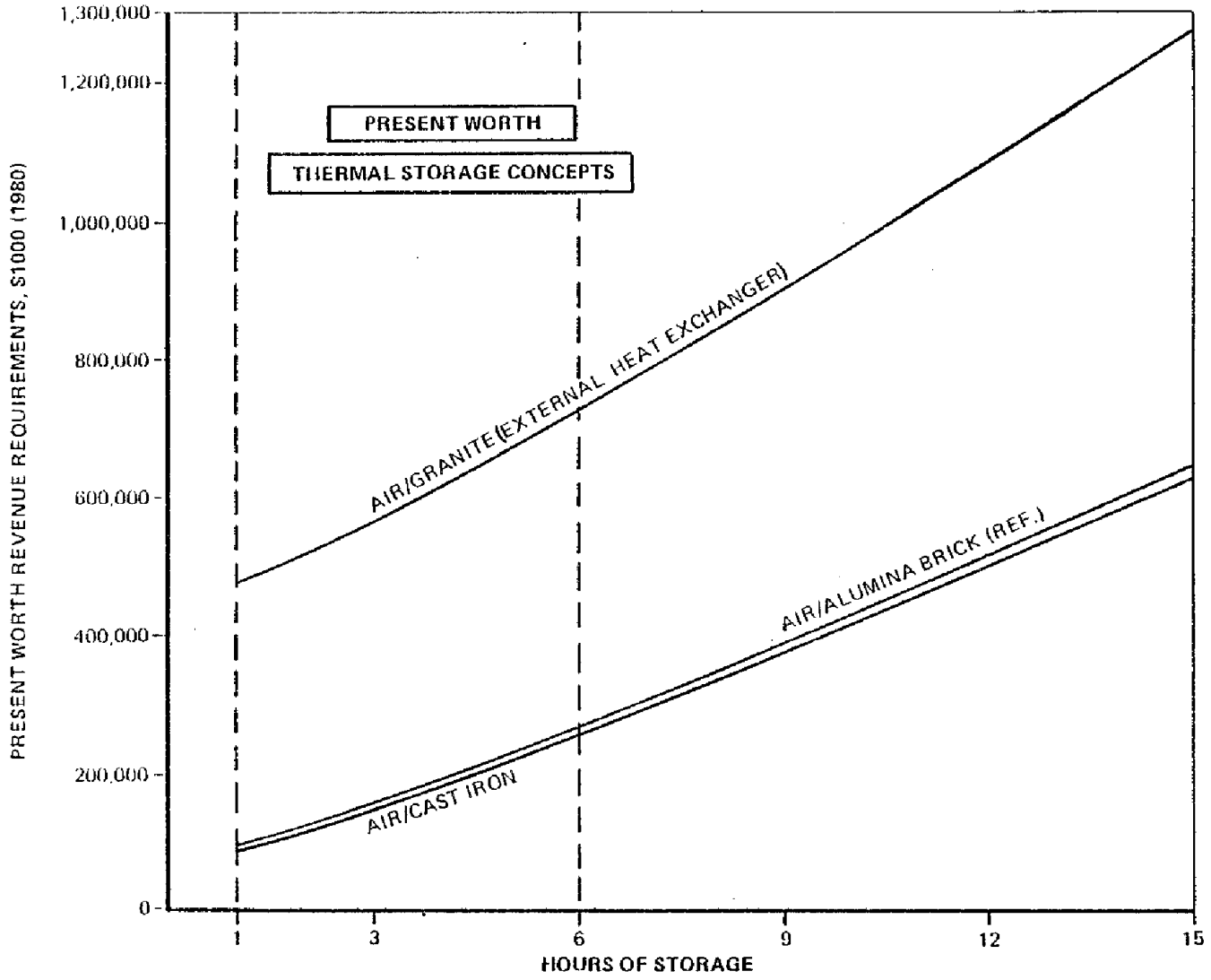

Figure 4–10. PRESENT WORTH REVENUE REQUIREMENTS, CLOSED AIR BRAYTON RECEIVER (POWER)

SECTION 5.0

SUPPLEMENTAL STUDIES

As a result of work performed in this study, four additional tasks were added by SERI in the form of supplemental studies to be included in this Phase I report.

The four tasks added include:

- Task 6 - Latent Heat Storage For Closed Brayton Cycle.
- Task 7 - New 399°C (750°F) Oil For Organic Fluid Receiver System.
- Task 8 - "600°F" Fluids Cost Sensitivity Analysis.
- Task 9 - Modified Tube Intensive Latent Heat Storage Utilizing Steam-to-Salt Heat Exchanger.

5.1 LATENT HEAT STORAGE FOR CLOSED BRAYTON CYCLE

5.1.1 System Description

The Latent Heat Tube Intensive Heat Exchanger 6-hour thermal storage system for the Closed Brayton Cycle is a scale up of an earlier Boeing Engineering and Construction concept [22]. The Boeing concept was based on six hours of thermal storage for a 50 MWe turbine. The storage concept consists of a large buried rectangular concrete thermal storage tank with internal insulation (refractory brick) and a superalloy liner. The thermal storage medium contained in the tank is the eutectic salt 7 wt. % CaF_2-54% KF-39% NaF; this salt has a melting temperature of 682°C (1,260°F). A large number of parallel, vertical Inconel 617 tubes contain the working fluid which transfers heat to or from the thermal storage medium. The tubes are arranged in a rectangular array with centerline spacing of 8.54 cm (3.362 in); the outside diameter of the tubes is 1.049 cm (0.413 in) and they are constructed of 22 BWG tubing. The tubes are connected to large inlet/outlet piping at top and bottom by "capillary network" manifolding. (See flow diagram, Figure 5-1). This manifolding is complex, with its many levels of branching, but the alternative, high pressure plenums such as the heads in a single pass shell and tube heat exchanger, would not be practical for such a large, high pressure vessel. Piping is arranged such that hot working fluid enters or leaves the vessel at the top and cold working fluid enters or leaves from the bottom, i.e., during charging hot working fluid enters the top and during discharging cold working fluid enters the bottom. As a result the melt pool is always on top of the solid salt, eliminating the possibility of void formation, and consequent heat transfer impairment, during salt solidification. A Circulation Compressor, consisting of a large electric motor-driven centrifugal compressor, is provided to make up the pressure drop (4% of the compressor outlet pressure) through the storage unit (and through the receiver during stand alone operation).

CLOSED HELIUM BRAYTON CYCLE
THERMAL STORAGE SYSTEM
(2-75 MWe MODULES)
6 HOURS STORAGE

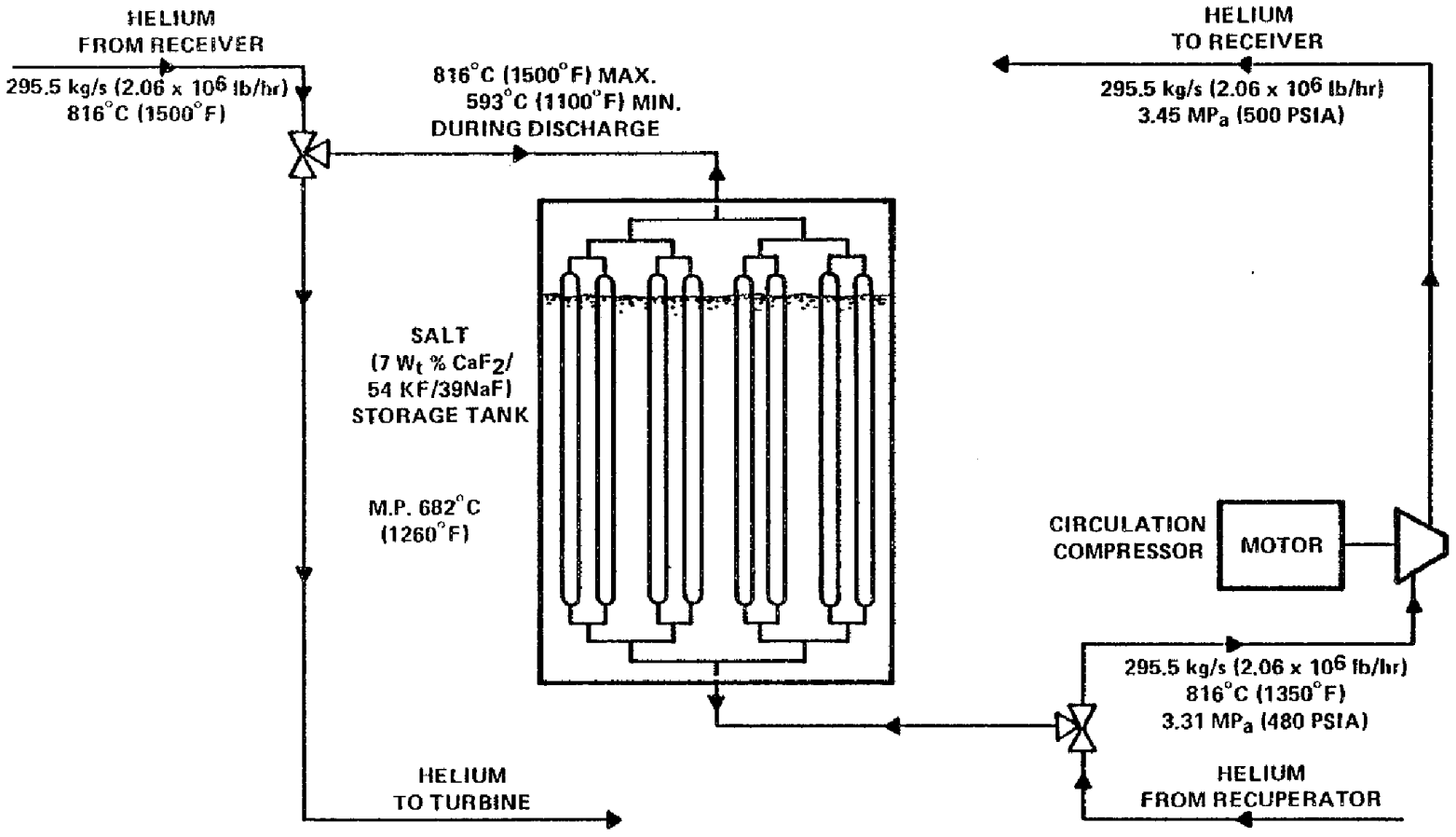

Figure 5–1. THERMAL STORAGE SYSTEM
LATENT HEAT TUBE INTENSIVE HEAT EXCHANGER

Boeing's selection of the particular configuration was based on a number of interrelated trade studies, namely:

1. Heat exchanger effectivness, storage medium mass, and pinch point temperature difference.

2. Storage medium thermal conductivity. (Storage system costs were found to be quite sensitive to the thermal conductivity of the salt and Boeing found little good data. Boeing proceeded with the sizing of the system by assuming an "average" thermal conductivity (the same for both liquid and solid phase) estimated from values for the constituent salts.

3. Pressure loss criterion.

4. Heat loss criterion.

5. Vessel cross sectional shape.

6. Tube spacing pattern.

7. Pinch point temperature difference (for this system, defined as the charging inlet flow temperature, 816°C (1500°F) less the exit flow temperature when the system is fully charged).

8. Salt melt temperature, considered along with other important characteristics such as heat of fusion, heat capacity and density.

Transient thermal behavior was partially verified by computer modelling (with 2 separate models of varying complexity) the systems. (The simpler of the models was used to determine heat exchanger effectiveness for the device sizing model.)

It is important to note that Boeings' selected configuration for the phase change thermal energy storage system, and all of the above studies, were based on the use of helium as a working fluid, which was the working fluid of favor in 1976. Boeing has since reported work on thermal energy storage systems for closed Brayton cycles using air as a working fluid [3], but these were sensible heat storage systems. Since the physical properties of helium are so much different from that of air, i.e., helium has almost 5 times the heat capacity, over 7 times the specific volume, and has a much higher thermal conductivity, than air, the latent heat thermal storage system of Boeing would likely have been different, and more expensive, had it been optimized for air working fluid. Since it was outside the scope of Stearns-Roger's effort to redesign and otpimize the thermal storage system using a different working fluid, Stearns-Roger has scaled up the Boeing system for 2-6 hour x 75 MWe modules, retained the helium working fluid, and assumed the same average turbine cycle efficiency that Boeing estimated for the two 50 MWe helium turbines of their concept.

Figure 5-2a indicates qualitatively the transient thermal performance of the system during the charging cycle. The system is charged with helium that is heated in the receiver to a temperature of 816°C (1500°F).

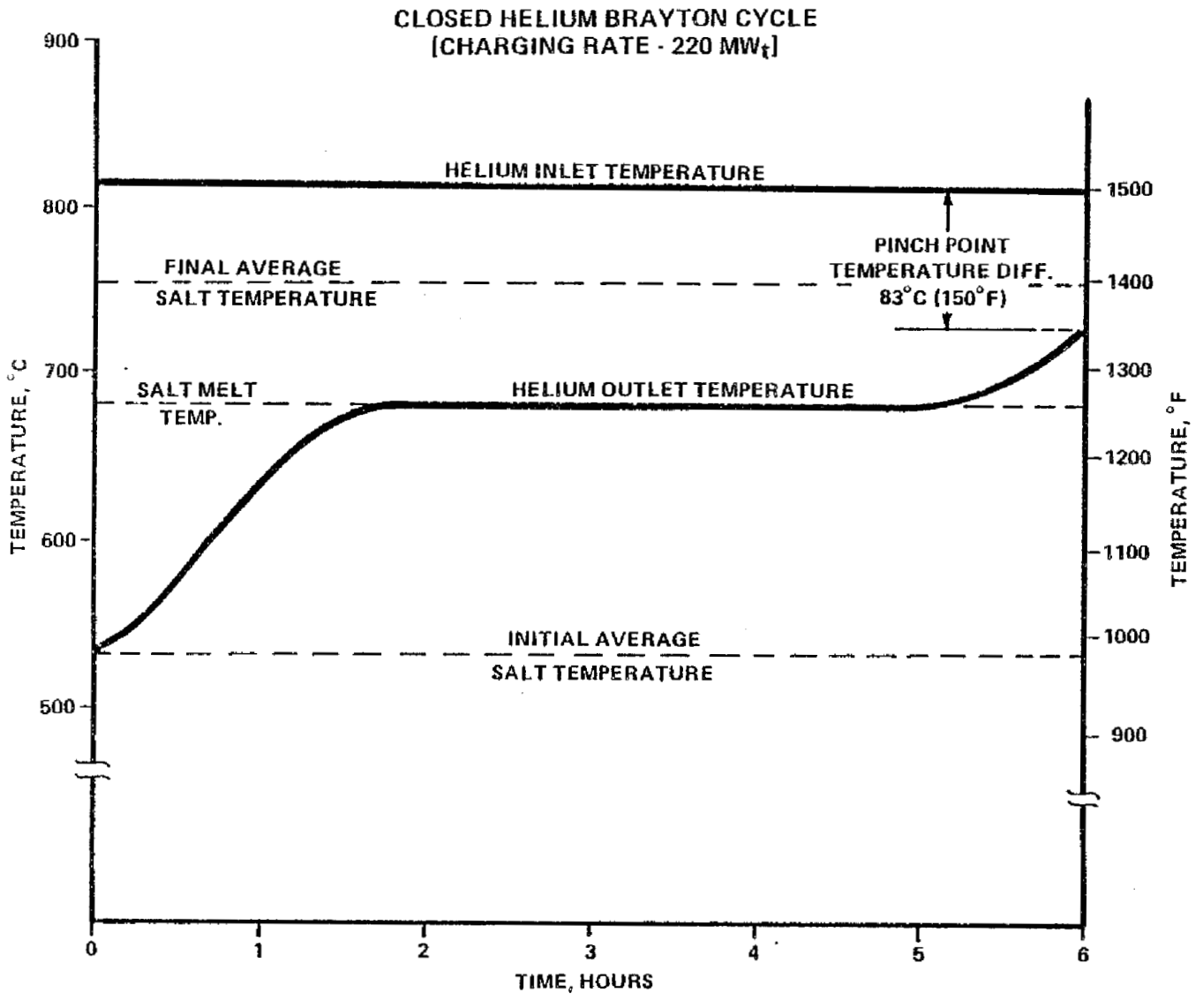

Figure 5–2a. ESTIMATED TRANSIENT THERMAL PERFORMANCE
LATENT HEAT TUBE INTENSIVE HX THERMAL STORAGE SYSTEM
(CHARGING CYCLE)

Initially, the helium outlet temperature is approximately the same as the initial salt temperature, but the outlet temperature rises rapidly to approximately the salt melt temperature (682°C or 1260°F). The helium outlet temperature remains approximately constant near the salt melting temperature until the salt is molten for nearly the entire length of the tubes. Then the helium outlet temperature begins to rise above the melt temperature; when the helium outlet temperature rises to the pinch point temperature (defined here as the inlet temperature less the pinch point temperature difference, 83°C (150°F)), the system is fully charged and charging is terminated. Since a system requirement is that the charging rate remain constant during the charging period, the helium mass flow rate must be increased greatly as the hot-to-cold helium temperature differential diminishes. Consequently, a very powerful circulation compressor is required. It should be noted, however, that the helium mass flow rate, system pressure differential, and consequently circulation compressor power requirements, are substantially lower than the design requiements during most of the charging cycle. The advanatage of having a high pinch point temperature relative to the salt melting temperature is that a large percentage of the salt (i.e., 70 to 80%) will change phase. Thus, less of the expensive storage media is required, more than compensating for the higher circulation compressor costs.

Figure 5-2b indicates qualitatively the transient thermal performance during the discharge cycle. If the thermal storage system is fully charged, the initial helium outlet temperature will be essentially the same as receiver temperature, 816°C or 1500°F, but the temperature will drop rapidly to essentially the salt freezing temperature and remain there for some time. As most of the tube surface becomes surrounded by fused salt, temperature gradients appear and the outlet temperature will drop below the salt freezing temperature. When the helium outlet temperature drops as low as the minimum turbine inlet temperature (593°C or 1100°F), the system is fully discharged and operation from storage terminates. By employing variable pressure operation, rated turbine output can be maintained during the entire discharge cycle. Average turbine gross cycle efficiency is only 34.1%, however; consequently a larger thermal storage system, and a larger solar multiplier are required than would be the case if a higher turbine inlet temperature and resulting higher efficiency could be maintained.

5.1.2 Thermal Storage Design Data

Table 5-1 indicates the Thermal Storage Design Data for the Latent Heat Tube Intensive Heat Exchanger 6-hour thermal storage system for the Closed Helium Brayton Cycle.

5.1.3 Cost Analysis

Table 5-2 indicates the cost of the latent system relative to the air/alumina brick reference system. The cost of power related equipment (CP) for the reference system is a fraction of the corresponding cost for the latent system, reflecting the high cost of the Circulation Compressors and the high cost of the Inconel 617 tubing of the heat exchangers. The overall cost of the latent system, however, is somewhat lower. Some of the cost advantage would undoubtedly disappear if the latent system were to be redesigned for an air working system.

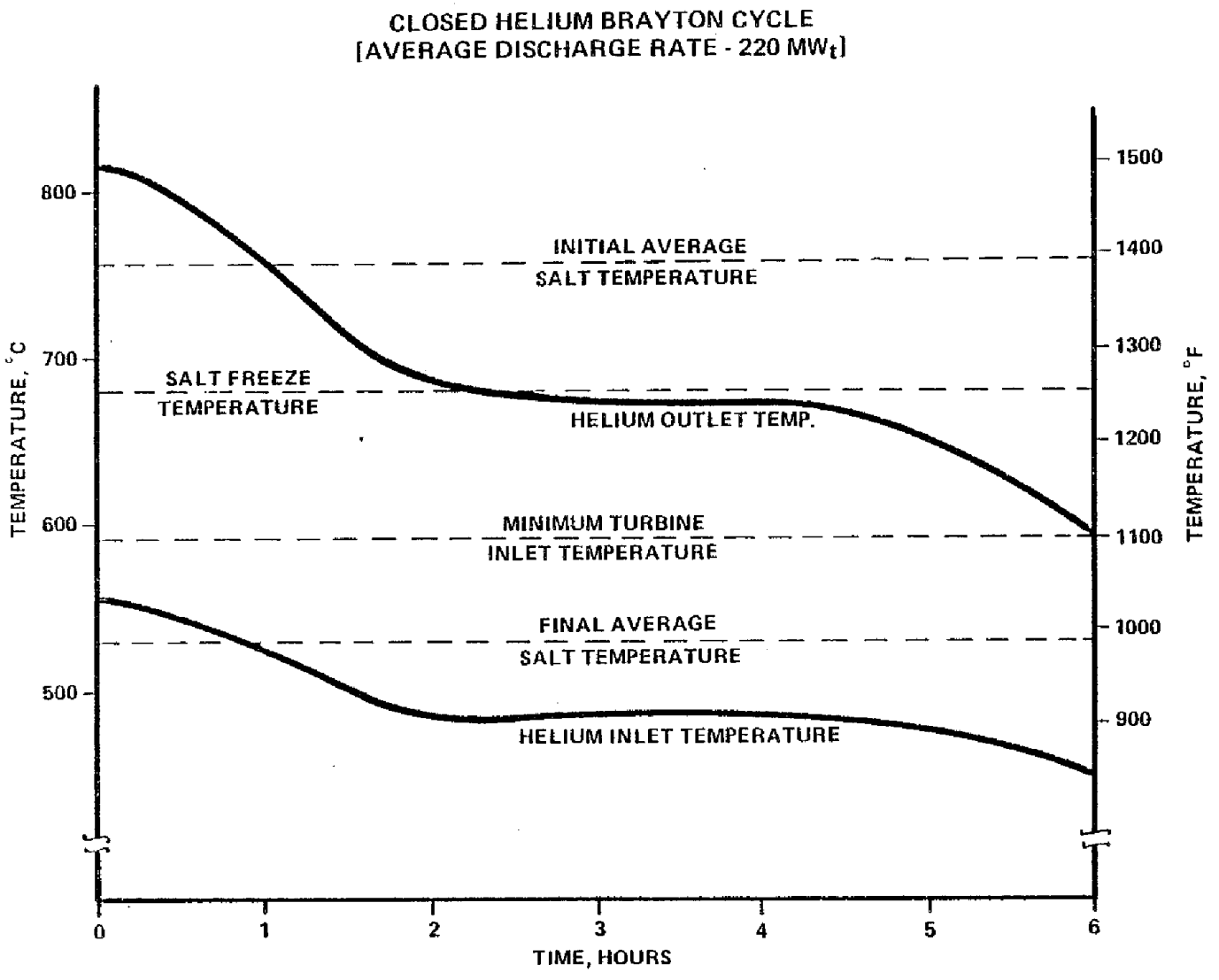

Figure 5–2b. ESTIMATED TRANSIENT THERMAL PERFORMANCE
LATENT HEAT TUBE INTENSIVE HX THERMAL STORAGE SYSTEM
(DISCHARGING CYCLE)

Table 5-1. THERMAL STORAGE DESIGN DATA
CLOSED HELIUM BRAYTON RECEIVER
LATENT HEAT, TUBE INTENSIVE
(Totals For 2 - 75 MWe Gross Power Modules)

HOURS OF STORAGE: Six (6)

		STAGE 1 OF 1
		Latent Heat Tube Intensive HX
STORAGE MEDIA		
1. Operating Temperature		
a. Hot	°C (°F)	754 (1,390)
b. Cold	°C (°F)	532 (990)
2. Quantity (Total)		
a. Salt (7 Wt % CaF, 54KF, 39 NaF)	kg (ton)	13.34×10^6 (14,700)
ENERGY RELATED EQUIPMENT		
1. Storage Capacity	$MW_t h$	2,639.3
2. Storage Tanks		
a. Quantity		Two (2)
b. Size, each (LxWxHt.)	m(ft)	23.3 x 19.8 x 30.8 (76.5 x 65 x 101)
c. Material		Concrete & Structural Steel
d. Weight, each	kg (ton)	6.8×10^6 (7,500)
3. Tank Insulation		
a. Type		Refractory Brick (Internal) w/Hastelloy N Liner
b. Thickness	m (ft)	0.11 (0.38)
4. Tank Foundation		None (Underground)
a. Type		
b. Thickness	m (ft)	
c. Quantity, Total	$m^3(yd^3)$	

		Charging	Discharging
POWER RELATED EQUIPMENT			
1. Working Fluid (Helium)			
a. Flow, Total	kg/s (lb/hr)	173 (1,373,000)	Design 197 (1,563,000)
b. Pressure	MPa (psia)	3.31 (480)	3.45 (500)
c. Temperature	°C (°F)	816 (1,500)	816 (1,500)Max,593(1,100)Min.
2. Storage Fluid		Flouride Salt (7 wt. % CaF, 54 KF, 39 NaF)	
a. Flow, Total	kg/s (lb/hr)	N/A	
b. Pressure (Tank)	MPa (psia)	Atmospheric	
c. Average Temperature	°C (°F)	754 (1,390)Max., 532 (990)Min.	
3. Compressors			
a. Quantity		Two (2)	
b. Type		Centrifugal Compressor	
c. Material		(TBD)	
d. Fluid		Helium	
e. Capacity, each	kg/s (lb/hr)	173 (1,373,000)	
f. Head	MPa (psi)	0.14 (20)	
g. Power (Shaft), each	kWe (hp)	43,300 (58,000)	
h. Motor size	kWe (hp)	43,300 (58,000)	
4. Heat Exchangers			
a. Quantity		Two (2)	
b. Type		Single Pass Tube Intensive	
c. Material		1.049cm (0.413 in) ODx22 BWG Inconel 617	
d. Surface Area, Total	$m^2(ft^2)$	34,550 (371,900)	
e. Duty, Total	MW_t	440	440 Av.
ANNUAL ENERGY			
1. Electrical Energy		32.85	N.A.
2. Electrical Energy(Total)	10^9xWeh	32.85	
3. Heat Loss (Total)	$10^9 J(10^9 BTU)$	83,200 (78.9)	

TABLE 5-2. THERMAL STORAGE ECONOMIC EVALUATION
CLOSED BRAYTON RECEIVER
SENSIBLE VS. LATENT ENERGY STORAGE SYSTEMS
[2 - 75 MWe GROSS POWER MODULES]

STORAGE CONCEPT	STORAGE HOURS	COST $1000 (1980)					
		CE	CP	MEDIA	CI	FYVC	PWRR
SENSIBLE							
AIR/ALUMINA BRICK (REFERENCE) (AIR)	6	14,498	1,766	36,083	127,448	2,847	261,142
LATENT							
TUBE INTENSIVE HX FLUORIDE SALTS (CaF_2, KF, NaF) (HELIUM)	6	6,198	12,880	15,112	96,432	3,159	217,786

5.1.4 Discussion

Boeing reported in Reference [3] that the principal obstacle to the development of phase change tube intensive thermal energy storage systems suitable for high temperature Brayton cycles is that salts which are thermally and chemically stable at such high temperatures tend to be corrosive to superalloy metals used to contain the salts. Oak Ridge National Laboratories has done some research on salt corrosivity for the Molten Salt Reactor program and is developing protective liners such as Hastelloy N. Phillips Laboratories of Germany has proposed the use of gettering agents such as powdered aluminum to react with the corrosive impurities in the salt to protect the low chromium superalloys used for heat exchanger tubing. Boeing reports that "Considerable experimental testing of this approach will be required to verify the suitability of the heat exchanger tubing for a 30 year life... It appears that, with adequate testing, appropriate materials and corrosion control agents can be obtained for the phase-change concept."

Another question that must be answered regarding the Boeing phase change tube intensive HX thermal storage concept is how much of its cost advantage can be maintained if its design is changed to accommodate an air working fluid. It is likely that the tubing cross sectional area, and hence tubing costs, will be increased if system frictional losses are to be held to economic levels.

5.2 NEW 399°C (750°F) OIL ORGANIC FLUID RECEIVER SYSTEM

5.2.1 Scope of Study

As part of the scope of work of this study, it was decided that an alternate 399°C (750°F) receiver fluid should be evaluated to determine receiver fluid impact on total system cost. The reference thermal energy storage system used with the new receiver fluid was the Shenandoah total energy system as employed in the study with six (6) hours of Hitec 2 tank molten salt storage. The system cost of the Hitec, 2 tank concept as well as performance of the system with the new fluid was to be determined.

5.2.2 Approach

Choosing an acceptable alternate receiver fluid was the first requirement. The only fluid that could be identified with 399° (750°F) capability was MCS 1980, manufactured by the Monsanto Company. MCS (Monsanto Chemical Sample) 1980 is a proprietary organic heat transfer fluid being developed by Monsanto. It has a higher density, higher specific heat, and lower apparent loss rate than Dow Corning's Syltherm 800, but costs about 10% more initially.

Fluid loss rates in percent per 2500 hours, for Syltherm 800 and MCS 1980, were taken from test results by Burolla [18], with loss rates adjusted to reflect fluid temperatures used in the study. All other characteristics of the fluids were provided by Dow Corning and Monsanto. Fluid loss rates in percent per year were determined based on the assumption that the receiver loop would be at the high temperature for a yearly average of 12 hours per day, meaning that 50% of the fluid would be at 399° (750°F) for 12 hours per day or an equivalent of 100% of the fluid for 6 hours per day. Assuming 330 days per year of plant operation gave an average of 1980 hours per year that the receiver fluid would be at 399°C (750°F).

After MCS 1980 was agreed upon as the fluid to use in this comparison, constraints were established to carry out the evaluation with a minimum amount of additional work. It was decided that most all of the receiver loop equipment (i.e. collectors, piping, charging heat exchanger) would remain the same when using a different receiver fluid. The only components that would change would be the size of the circulating pump due to the different storage densities of the fluids, and the addition of heat tracing to the MCS 1980 system. This permitted using capital costs obtained in the study and provided a good base for comparison. It was understood that by using different size circulation pumps with the same size line, 0.15m (0.5 ft.), that pump costs, pumping heads, and pumping power would change. This change was handled using viscosity and velocity ratios to specific powers developed using fluid hydraulic data in Cameron [23]. A summary of Syltherm 800 and MCS 1980 fluid characteristics are shown in Table 5-3.

5.2.3 Results and Discussion

5.2.3.1 Syltherm 800/MCS 1980 System Comparison

Results of the alternate receiver fluid evaluation are shown in Table 5-4. Total present worth cost of the system using MCS 1980 is 10.9% less than the system using Syltherm 800, primarily the result of the lower fluid loss rate demonstrated by MCS 1980. In addition, for Syltherm 800 to be competitve at the fluid loss rate shown for MCS 1980, the fluid loss rate for Syltherm 800 would have to be 5.8% per year or less. Therefore, it appears that MCS 1980 would be better suited economically than Syltherm 800 for a 399°C (750°F) receiver fluid application.

In addition to cost savings due to a low fluid loss rate, MCS 1980 would provide other cost advantages as well. Because of the higher storage density of MCS 1980 (53% higher), the size of the line in the receiver loop could most likely be reduced to the next smallest pipe size, therefore reducing required inventory of MCS 1980 and also reducing the capital cost of the pipe, while insignificantly increasing system cost due to increased pumping power. The cost savings involved are expected to be significant.

Flow diagrams for the systems involved in the evaluation are shown in Figure 5-3. Temperatures and heat loads in the receiver loop remain constant regardless of fluid and only mass flow rate and pumping power change. It is expected that employing a storage system with a capacity of something other than six hours of storage would produce similar results.

Table 5-3. SYLTHERM 800 AND MCS 1980 FLUID CHARACTERISTICS

Characteristic	Temperature °C (°F)	Units	Syltherm 800	MCS 1980
Fluid Manufacturer			Dow Corning	Monsanto
Manufacturer's Recommended Operating Temperature Range		°C (°F)	-40(-40) to 399 (750)	66(150) to 399 (750)
Approx. Pour Point		°C (°F)	-65 (-85)	10 (50)
Density	338 (640)	$kg/m^3(lb/ft^3)$	652 (40.7)	878 (54.8)
Specific Heat	338 (640)	kJ/kg°C(BTU/lb°F)	2.09 (0.50)	2.39 (0.57)
Storage Density	338 (640)	$kJ/m^3°C$ ($BTU/ft^3°F$)	1375 (20.5)	2099 (31.3)
Kinematic Viscosity	338 (640)	Cs	0.582	0.486
	66 (150)	Cs	5.5	30
Vapor Pressure	399 (750)	kPa (PSIA)	~ 103 (~ 15)	107 (15.5)
Thermal Conductivity	338 (640)	Watt/m-°C (BTU/hr-ft-°F)	0.087(0.050)	0.109 (0.063)
Fluid Loss Rate	399 (750)	%/2500 Hr.	38.0	1.4
	277 (530)	%/2500 Hr.	0.03	0.01
Bulk Cost (1980)	15 (59)	$/Gal.	22.40	25.00

$\rho = 40.7 \frac{lb}{ft^3}$

$= 5.45 \, lb/gal$

$22.40 \frac{\$}{gal} \; \frac{gal}{5.45 \, lb}$

$= \$4.11$ per lb

$= \$9.04$ per kg

Table 4.6 → \$283 per lb ?

Table 5-4. COST COMPARISON USING SYLTHERM 800 AND MCS 1980 RECEIVER FLUIDS ORGANIC FLUID RECIEVER (POWER) HITEC (2 TANK) THERMAL STORAGE SYSTEM

[6 Hours Storage]

RECEIVER FLUID	CE	CP	COST $1000 (1980) MEDIA[a]	CI	FYVC	PWRR
Syltherm 800	78	125	217	1,135	34	2,502
MCS 1980	83	124	223	1,163	18	2,229

[a]Media cost includes receiver fluid and storage media (HITEC).

A-4.81.109

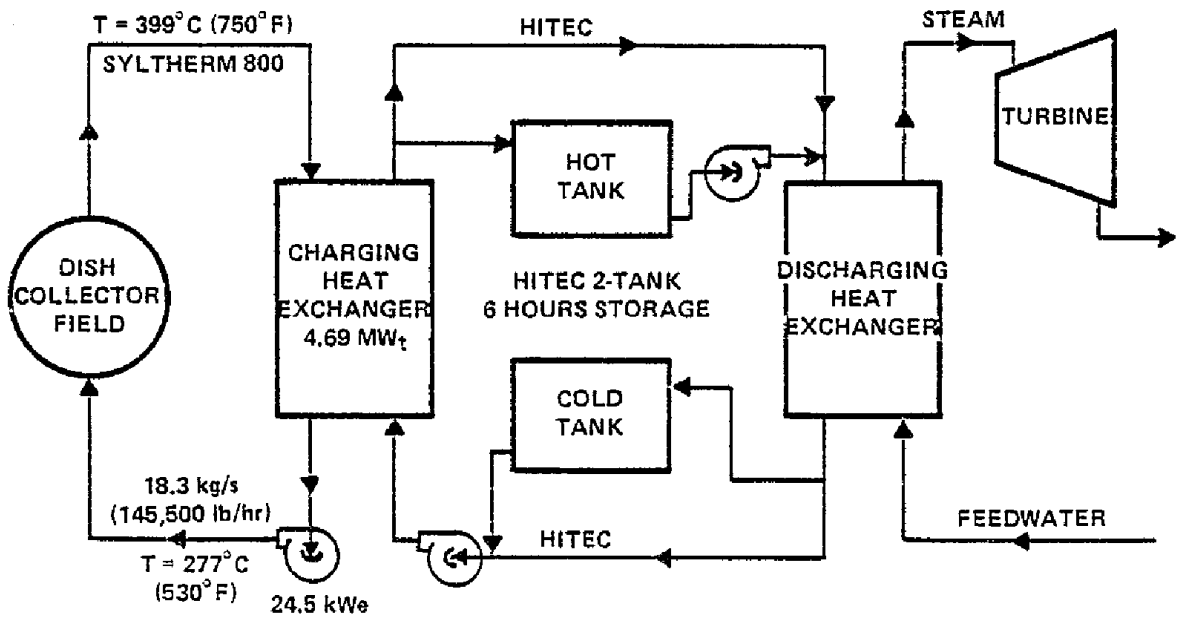

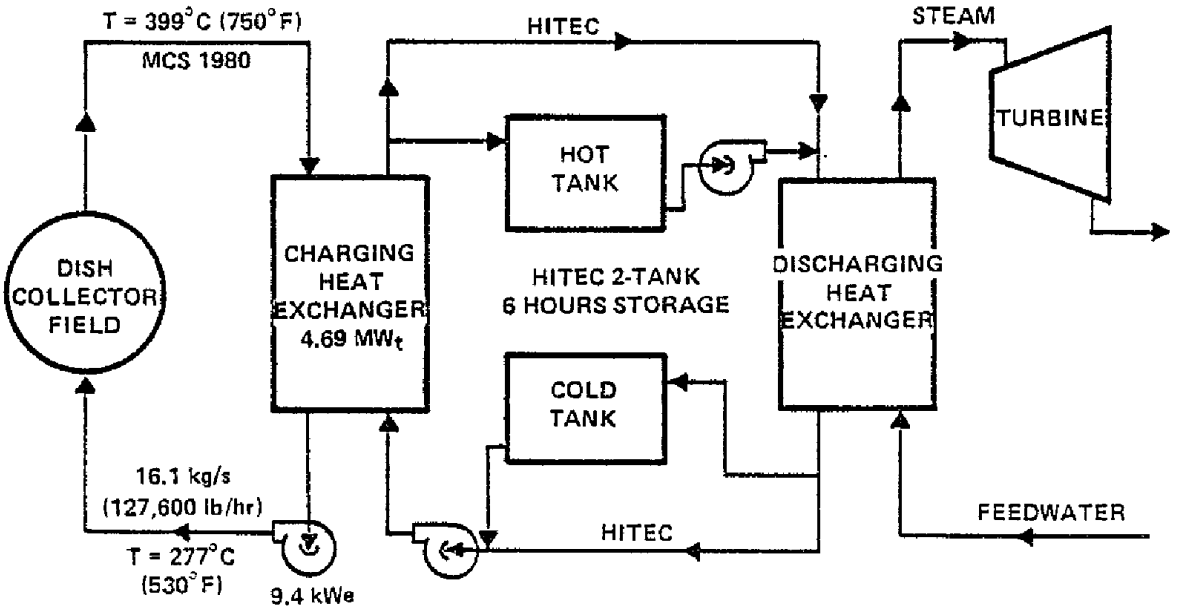

Figure 5–3. FLOW DIAGRAMS USING SYLTHERM 800 AND MCS 1980 RECEIVER FLUIDS ORGANIC FLUID RECEIVER (POWER) HITEC 2-TANK THERMAL STORAGE SYSTEM

5.2.3.2 Receiver Loop Heat Loss Evaluation

A heat loss analysis on the receiver loop was performed for the system concept using the MCS 1980 receiver fluid to determine overnight (12 hour) temperature loss in the receiver loop. It was assumed that the fluid in the receiver loop would begin overnight cooling at 277°C (530°F) with an average overnight ambient temperature of 10°C (50°F), and a minimum allowable temperature of the MCS 1980 of 93°C (200°F). Using 0.10m (0.33 ft) of calcium silicate insulation with aluminum lagging on an estimated 518m (1700 ft) of equivalent 0.15m (0.5 ft) pipe representing the receiver loop, fluid temperature after 12 hours of cooling was calculated to be about 204°C (400°F). Overnight heat loss was therefore not considered to be a concern when using MCS 1980, because the temperature remained well above 93°C (200°F). Time required for the fluid to cool to 93°C (200°F) was calculated to be approximately 37 hours.

As assumed in the study part of the operating scenario of the plant was that for 35 days each year, the plant would be down for maintenance or cloudy days. This downtime amounted to a 20 kWe heat tracing load on the system for 840 hours per year to maintain 93°C (200°F) in the receiver loop when using MCS 1980. This additional energy required by the receiver loop increased the total present worth cost of the MCS 1980 system by about 0.5 percent.

5.3 "600 F" FLUIDS COST SENSITIVITY ANALYSIS

5.3.1 Scope of Study

During the course of the SERI Thermal Energy Storage Study, it was discovered that fluid cost and loss rates both had severe impacts on cost of the total thermal storage system. It was agreed upon that more work needed to be done in the area of alternate fluids with varying costs and loss rates. In response to this need, a "600 F" fluid cost sensitivity analysis was adopted as part of the scope of work for the following storage concepts:

Water/Steam (Power)
- 1st stage: oil/rock, 2nd stage: drawsalt (2 tank).
- 1st stage: oil (2 tank), 2nd stage: drawsalt (2 tank).

Water/Steam (Process Heat)
- oil/rock (above-ground tanks).

5.3.2 Approach

It was decided that the most useful type of analysis would be a generic study with fluid cost, fluid loss rates and hours of storage as parameters. Fluid costs used were $1.00, $7.50 and $15.00 per gallon, fluid loss rates were assumed at 0%, 15% and 30% per 2500 hours, and hours of storage were 1,6 and 15 hours. All of the fluids considered in the study fell within the bounds of the above costs and loss rates.

Cost and design data from work already performed for 1,6 and 15 hours of storage were used as a base while fluid cost and loss rates were varied. These variations were reflected in the present worth costs of the systems.

5.3.3 Results and Discussion

Results of the cost sensitivity analysis are shown in Figures 5-4, 5-5, and 5-6. Although fluid cost, fluid loss rate, and hours of storage all have significant impacts on the total present worth cost of the system, using a low cost fluid would provide the greatest cost savings because it not only affects initial cost of fluid inventory but replacement costs as well, regardless of fluid loss rate. For example, for the water/steam (power) reference case, a fluid costing approximately $5.00 per gallon would have to have a zero fluid loss rate to be competitive with Caloria HT-43 at about $1.50 per gallon even though Caloria has an estimated 27%/2500 hour fluid loss rate at 316 C (600 F). To be more specific, for Therminol 66 ($10.85/gallon, 5.7%/2500 hour fluid loss rate) to be competitive with Caloria HT-43 at 6 hours of storage, the Caloria fluid loss rate would have to exceed 125%/2500 hours, which appears highly unlikely. A most valuable conclusion of this analysis is the obvious importance of using a low cost fluid when designing a thermal storage system.

The fluid sensitivity cost summary for the reference water/steam power system with an oil/rock-draw salt (2 tank) 2-stage storage concept is shown in Table 5-5. As shown in Table 5-5, the energy related (CE) and power related (CP) costs were assumed to be constant and only the media cost, capital investment, first year variable costs (FYVC) and present worth of revenue requirements (PWRR) vary with fluid cost and fluid replacement cost. This assumes that the alternate fluids have the same specific heat, thermal condutivity and thermal storage density as Caloria HT-43, thus storage tank sizes, heat exchangers and pumping requirements are not affected.

Table 5-6 shows the fluid sensitivity cost summary for the oil (2 Tank) draw salt (2 tank) water/steam power storage concept.

Table 5-7 presents the fluid sensitivity cost summary for the reference water/steam process heat oil/rock thermal storage case.

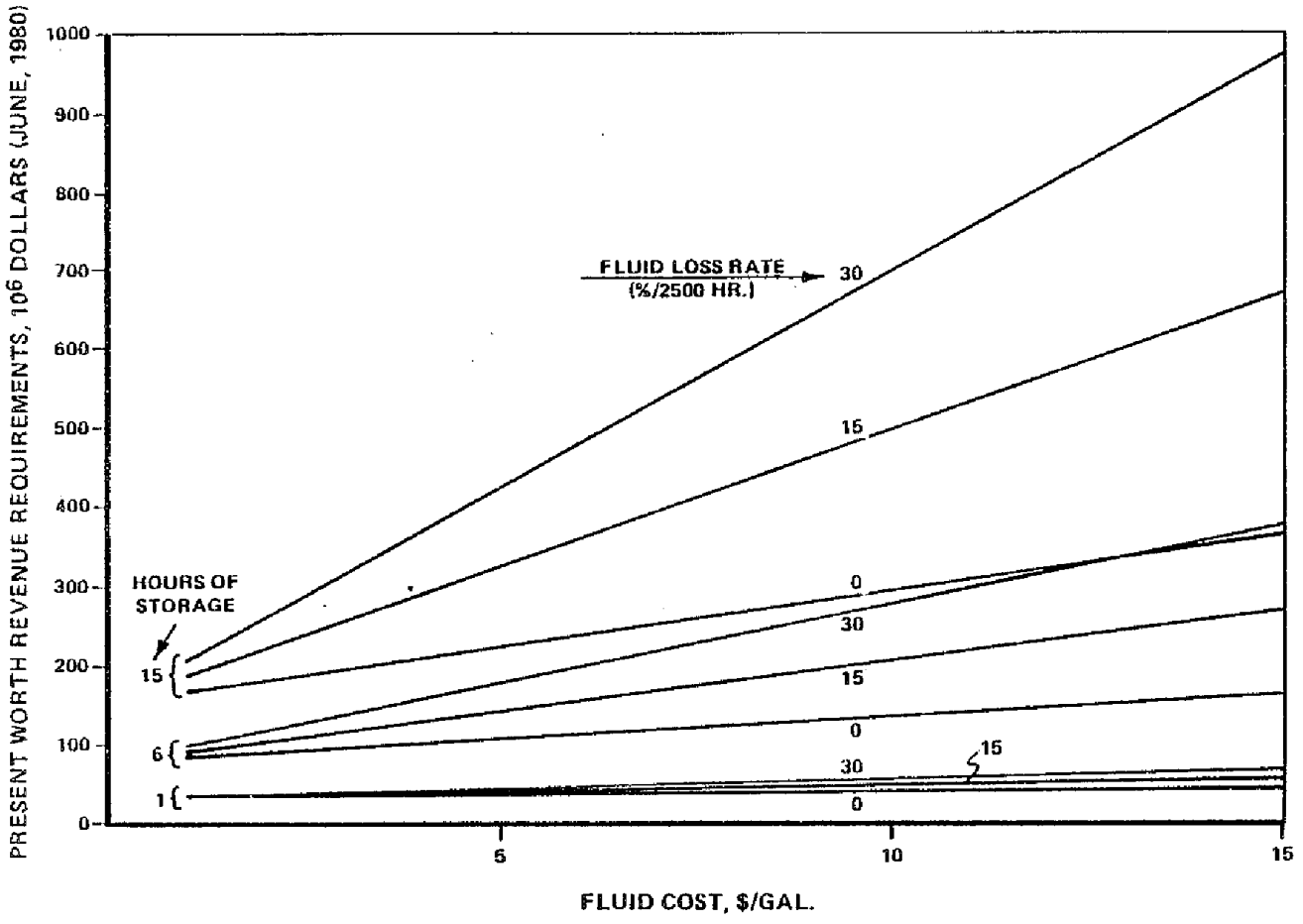

Figure 5–4. FLUID SENSITIVITY COST CURVES
WATER/STEAM RECEIVER (POWER)
1ST STAGE: OIL/ROCK, 2ND STAGE: DRAW SALT (2 TANK)

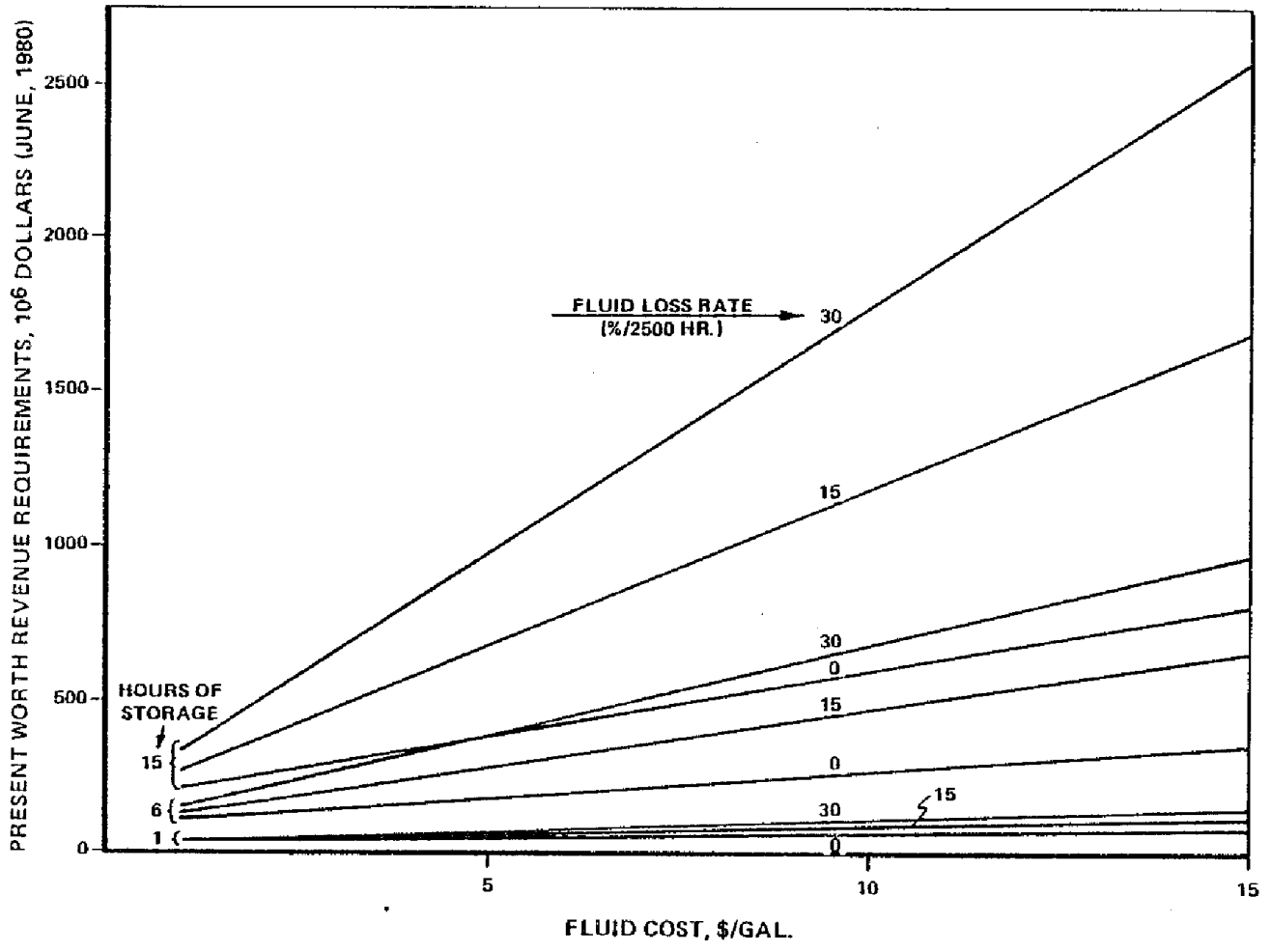

Figure 5–5. FLUID SENSITIVITY COST CURVES
WATER/STEAM RECEIVER (POWER)
1ST STAGE: OIL (2 TANK), 2ND STAGE: DRAW SALT (2-TANK)

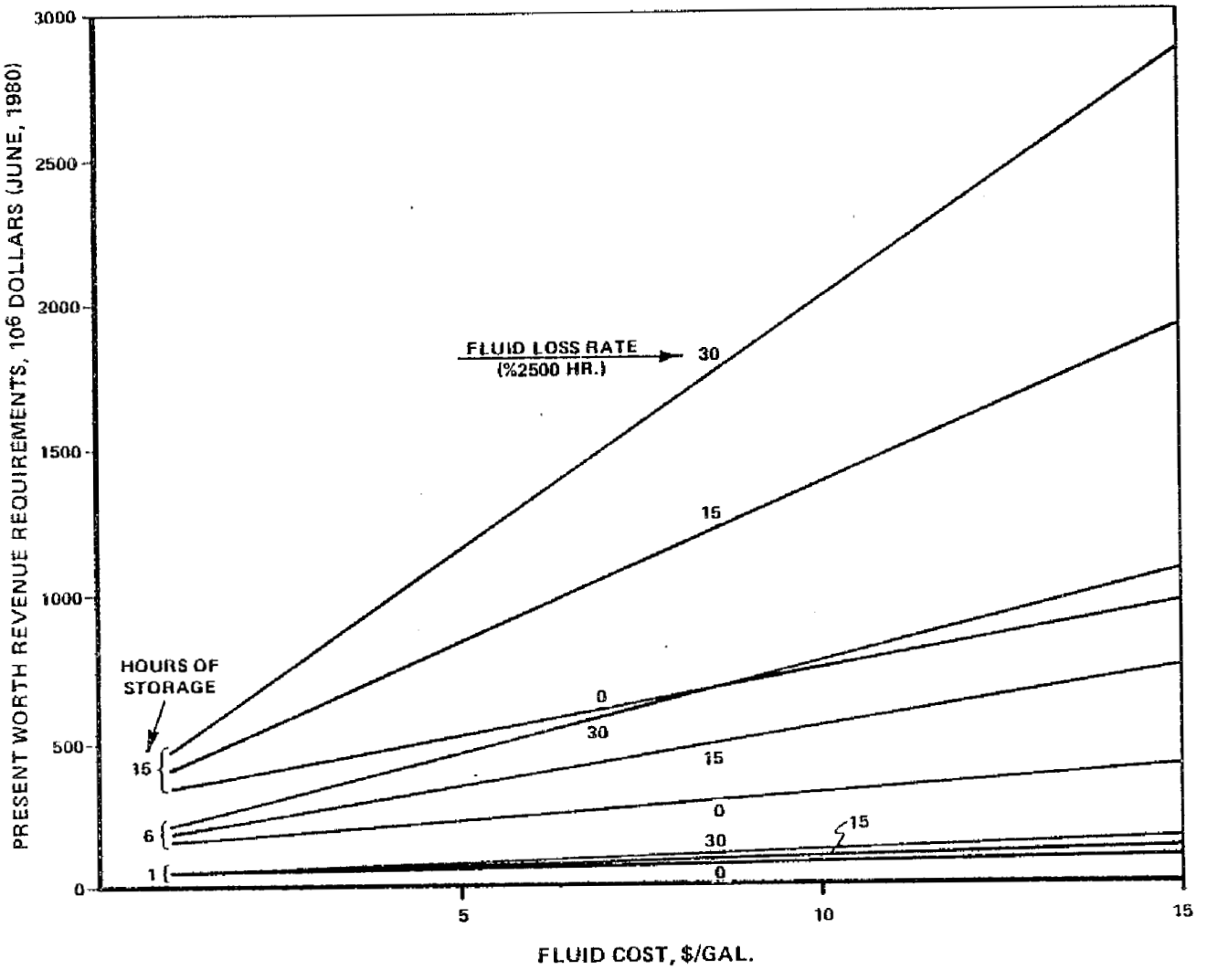

Figure 5–6. FLUID SENSITIVITY COST CURVES
WATER/STEAM RECEIVER (PROCESS HEAT)
OIL/ROCK

Table 5–5. FLUID SENSITIVITY COST SUMMARY
WATER/STEAM RECEIVER (POWER)
1ST STAGE: OIL/ROCK, 2ND STAGE: DRAW SALT (2 TANK)

FLUID COST $/GALLON	FLUID LOSS RATE %/2500 HRS.	COST, $1000 (JUNE 1980)					
		CE	CP	MEDIA	CI	FYVC	PWRR
1 HOUR STORAGE							
	0	762	3,147	625	14,939	396	31,862
1.00	15	762	3,147	625	14,939	436	32,666
	30	762	3,147	625	14,939	477	33,490
	0	762	3,147	2,634	18,856	396	38,129
7.50	15	762	3,147	2,634	18,856	696	44,159
	30	762	3,147	2,634	18,856	1,004	50,350
	0	762	3,147	4,951	23,374	396	45,358
15.00	15	762	3,147	4,951	23,374	996	57,418
	30	762	3,147	4,951	23,374	1,611	69,779
6 HOUR STORAGE							
	0	3,529	5,308	3,746	38,322	1,071	82,843
1.00	15	3,529	5,308	3,746	38,322	1,425	89,958
	30	3,529	5,308	3,746	38,322	1,780	97,093
	0	3,529	5,308	15,746	61,720	1,071	120,280
7.50	15	3,529	5,308	15,745	61,720	3,726	173,645
	30	3,529	5,308	15,745	61,720	6,389	227,171
	0	3,529	5,308	29,590	88,718	1,071	163,477
15.00	15	3,529	5,308	29,590	88,718	6,381	270,208
	30	3,529	5,308	29,590	88,718	11,706	377,240
15 HOUR STORAGE							
	0	8,905	7,511	9,379	75,908	2,170	165,070
1.00	15	8,905	7,511	9,379	75,908	3,187	185,512
	30	8,905	7,511	9,379	75,908	4,200	205,873
	0	8,905	7,511	39,435	134,517	2,170	258,844
7.50	15	8,905	7,511	39,435	134,517	9,798	412,167
	30	8,905	7,511	39,435	134,517	17,395	564,867
	0	8,905	7,511	74,115	202,143	2,170	367,046
15.00	15	8,905	7,511	74,115	202,143	17,425	673,672
	30	8,905	7,511	74,155	202,143	32,620	979,091

Table 5–6. FLUID SENSITIVITY COST SUMMARY
WATER/STEAM RECEIVER (POWER)
1ST STAGE: OIL (2 TANK), 2ND STAGE: DRAW SALT (2 TANK)

FLUID COST $/GALLON	FLUID LOSS RATE %/2500 HRS.	COST, $1000 (JUNE 1980)					
		CE	CP	MEDIA	CI	FYVC	PWRR
1 HOUR STORAGE							
	0	1,036	3,147	1,144	16,914	425	35,605
1.00	15	1,036	3,147	1,144	16,914	541	37,936
	30	1,036	3,147	1,144	16,914	659	40,308
	0	1,036	3,147	6,968	28,271	425	53,776
7.50	15	1,036	3,147	6,968	28,271	1,295	71,263
	30	1,036	3,147	6,968	28,271	2,180	89,051
	0	1,036	3,147	13,688	41,375	425	74,743
15.00	15	1,036	3,147	13,688	41,375	2,165	109,717
	30	1,036	3,147	13,688	41,375	3,935	145,294
6 HOUR STORAGE							
	0	5,374	5,308	6,870	50,890	1,265	106,851
1.00	15	5,374	5,308	6,870	50,890	2,298	127,614
	30	5,374	5,308	6,870	50,890	3,331	148,378
	0	5,374	5,308	41,840	119,081	1,265	215,957
7.50	15	5,374	5,308	41,840	119,081	9,013	371,692
	30	5,374	5,308	41,840	119,081	16,760	527,406
	0	5,374	5,308	82,190	197,764	1,265	341,849
15.00	15	5,374	5,308	82,190	197,764	16,760	653,298
	30	5,374	5,308	82,190	197,764	32,255	964,748
15 HOUR STORAGE							
	0	11,635	7,511	17,200	100,741	2,457	210,572
1.00	15	11,635	7,511	17,200	100,741	5,420	270,128
	30	11,635	7,511	17,200	100,741	8,370	329,423
	0	11,635	7,511	104,755	271,473	2,457	483,743
7.50	15	11,635	7,511	104,755	271,473	24,680	930,425
	30	11,635	7,511	104,755	271,473	46,805	1,375,138
	0	11,635	7,511	205,780	468,472	2,457	798,941
15.00	15	11,635	7,511	205,780	468,472	46,902	1,692,285
	30	11,635	7,511	205,780	468,472	91,152	2,581,710

Table 5–7. FLUID SENSITIVITY COST SUMMARY
WATER/STEAM RECEIVER (PROCESS)
1ST STAGE: OIL/ROCK

FLUID COST $/GALLON	FLUID LOSS RATE %/2500 HRS.	COST, $1000 (JUNE 1980)					
		CE	CP	MEDIA	CI	FYVC	PWRR
1 HOUR STORAGE							
	0	1,603	3,845	1,204	21,470	631	47,035
1.00	15	1,603	3,845	1,204	21,470	755	49,528
	30	1,603	3,845	1,204	21,470	881	52,060
	0	1,603	3,845	7,425	33,600	631	66,443
7.50	15	1,603	3,845	7,425	33,600	1,561	85,136
	30	1,603	3,845	7,425	33,600	2,506	104,131
	0	1,603	3,845	14,602	47,596	631	88,837
15.00	15	1,603	3,845	14,602	47,596	2,491	126,223
	30	1,603	3,845	14,602	47,596	4,381	164,212
6 HOUR STORAGE							
	0	8,803	7,904	7,226	72,733	2,142	159,427
1.00	15	8,803	7,904	7,226	72,733	3,244	181,577
	30	8,803	7,904	7,226	72,733	4,347	203,748
	0	8,803	7,904	44,543	145,501	2,142	275,856
7.50	15	8,803	7,904	44,543	145,501	10,407	441,983
	30	8,803	7,904	44,543	145,501	18,680	608,270
	0	8,803	7,904	87,600	229,462	2,142	410,193
15.00	15	8,803	7,904	87,600	229,462	18,672	742,446
	30	8,803	7,904	87,600	229,462	35,217	1,075,001
15 HOUR STORAGE							
	0	22,006	12,087	18,066	154,894	4,570	339,687
1.00	15	22,006	12,087	18,066	154,894	7,728	403,163
	30	22,006	12,087	18,066	154,894	10,872	466,357
	0	22,006	12,087	111,374	336,845	4,570	630,809
7.50	15	22,006	12,087	111,374	336,845	28,255	1,106,878
	30	22,006	12,087	111,374	336,845	51,835	1,580,836
	0	22,006	12,087	219,036	546,786	4,570	966,715
15.00	15	22,006	12,087	219,036	546,786	51,940	1,918,852
	30	22,006	12,087	219,036	546,786	99,100	2,866,768

5.4 MODIFIED TUBE INTENSIVE HX (LATENT) STORAGE CONCEPT

5.4.1 Water/Steam Receiver (Power)

5.4.1.1 System Description

As an alternative to the first stage tube intensive heat exchanger concept discussed in Section 3.4.9, a modified tube intensive heat exchanger six hour storage concept based on a concept currently under conceputal design by Comstock & Wescott and Combustion Engineering [16] was studied. The system flow diagram is shown in Figure 5-7; the second stage draw salt (2 tank) system is identical to the second stage sensible draw salt (2 tank) system for the latent, containerized salt (NRL) six hour thermal storage system of Section 3.4.10.

The Comstock & Wescott-Combustion Engineering design (refer to Figure 5-8) consists of rectangular steel tanks filled with salt and rectangular modular tube bundes; each tube bundle, in turn, consists of a number of parallel, small diameter seamless carbon steel tubes. The tubes are fabricated into a serpentine configuration and are separated and supported by closely spaced channel shapes formed from light gauge sheet aluminum and carbon steel. These channel shapes are known as "heat transfer enhancement sheets"; they have the additional important function of promoting heat transfer by acting as an extended surface from the tubing to the salt mass. C&W - CE computer simulations of the concept design selected indicate that the overall heat transfer coefficient (calculated using exteral tube area only) is over 480 $J/s\text{-}m^2\text{-}°C$ (80 $Btu/hr\text{-}ft^2\text{-}°F$) compared to about 120 $J/s\text{-}m^2\text{-}°C$ (20 $Btu/hr.\text{-}ft^2\text{-}°F$) for the spiral tubes (without extended surface) in the tube intensive system described in Section 3.4.9.

C&W-CE's current concept design work has been based upon the use of the NaOH, $NaNo_3$ entectic (81.5 mole percent NaOH) which does not have a high enough melting temperature for optimum application to the water/steam receiver (power) cycle. Accordingly, "Thermkeep" (91.8 Wt. % NaOH, 8% $NaNO_3$, 0.2% MnO_2) with a melting point of 292°C (558°F) was selected for study. The temperature profile is shown in Figure 5-9. Tube diameter, spacing (0.15 m (0.5 ft.) horizontally and vertically, and heat transfer enhancement sheet spacing (1.91 cm (0.75 in)) of the C&W-CE concept have been retained. The controlling (charging) overall heat transfer coefficient is lower (by about 15%) than was used by C&W-CE, so the design should be conservative if the C&W-CE computer simulations are accurate.

5.4.1.2 Thermal Storage Design Data

The conceptual design data for the modified tube intensive draw salt (2 tank) 6-hour thermal storage system for the water/steam receiver (power) cycle is shown in Table 5-8.

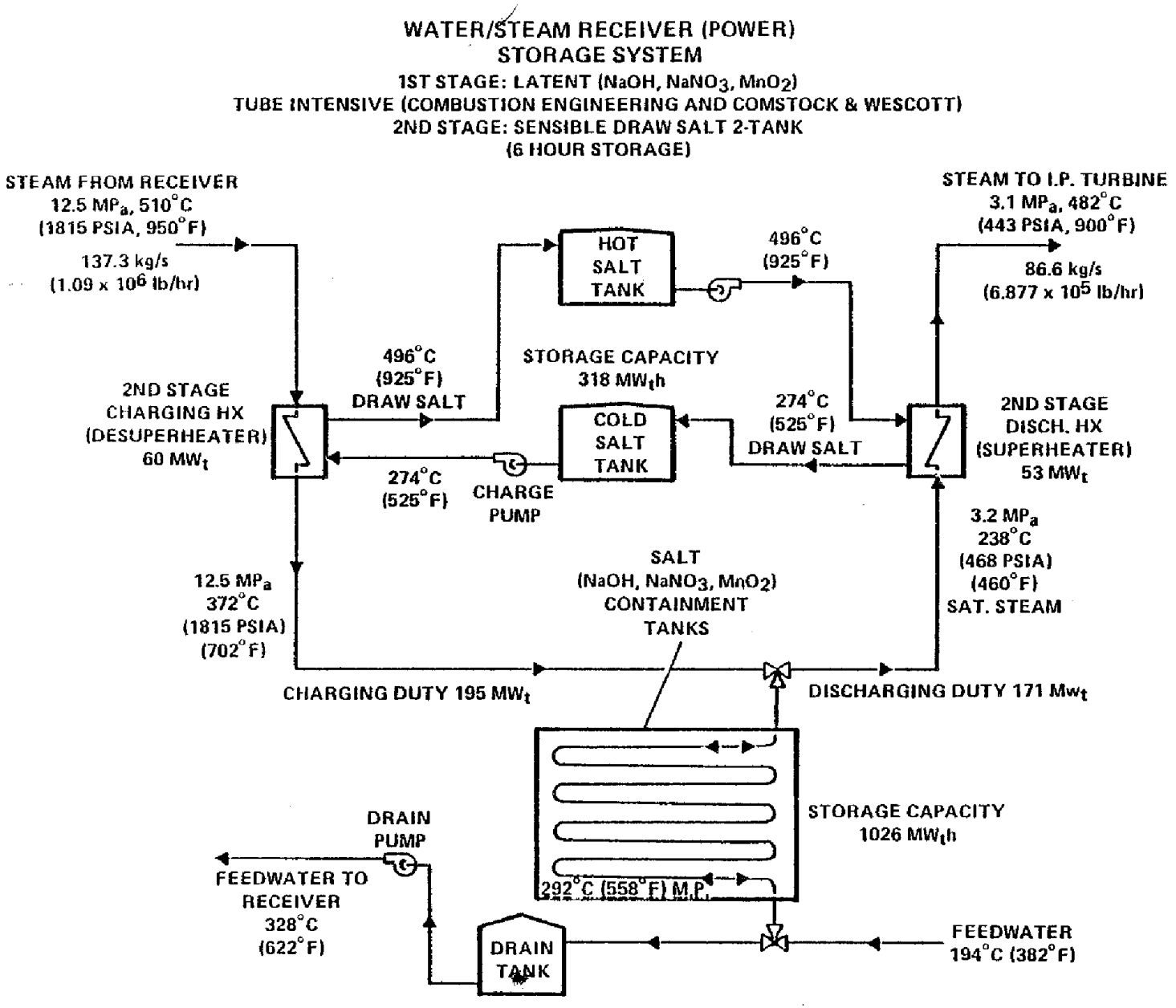

Figure 5–7. THERMAL STORAGE SYSTEM
MODIFIED TUBE INTENSIVE HX (LATENT) – DRAW SALT (2-TANK)

A-481-107

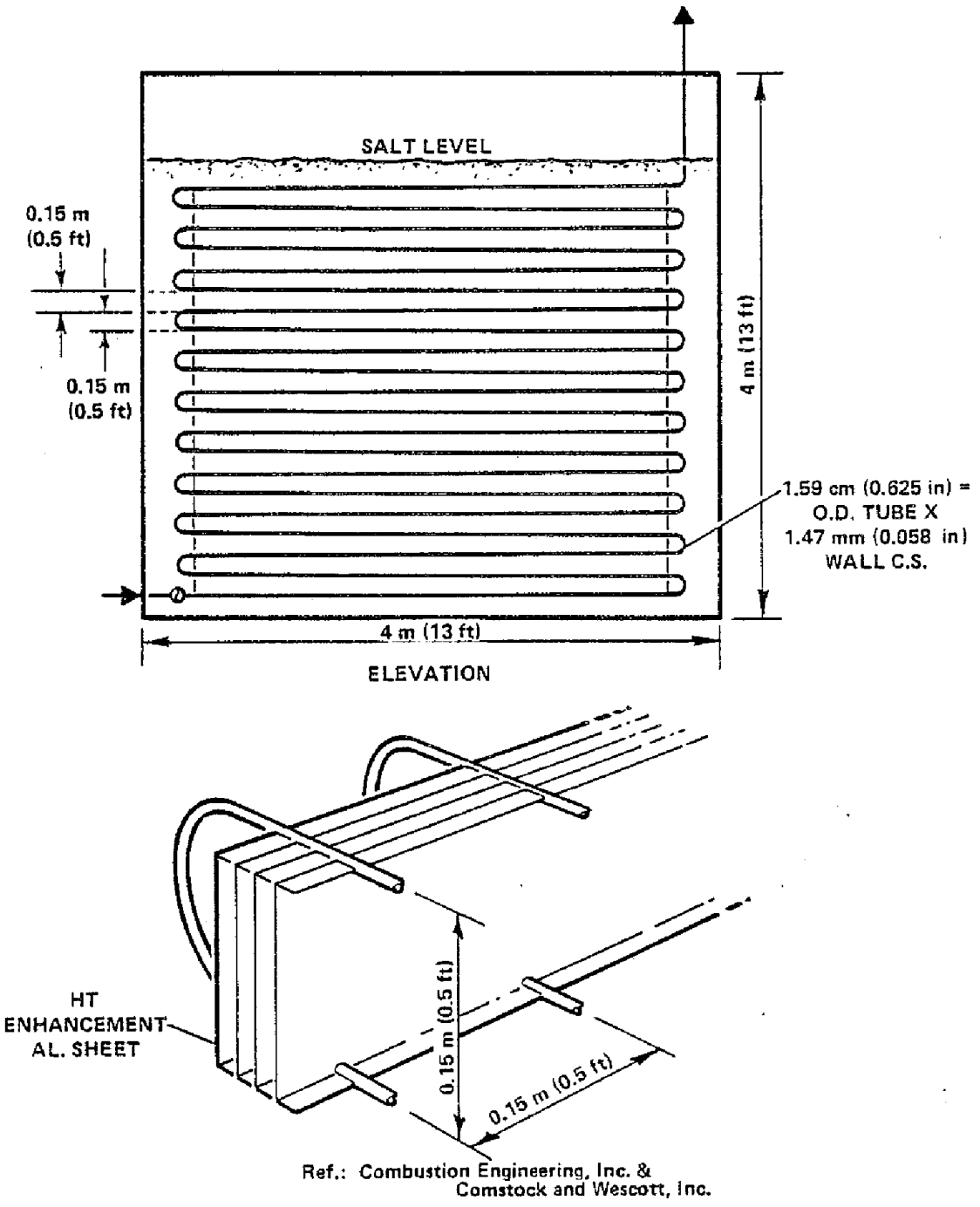

Figure 5–8. MODIFIED TUBE INTENSIVE HX CONCEPT

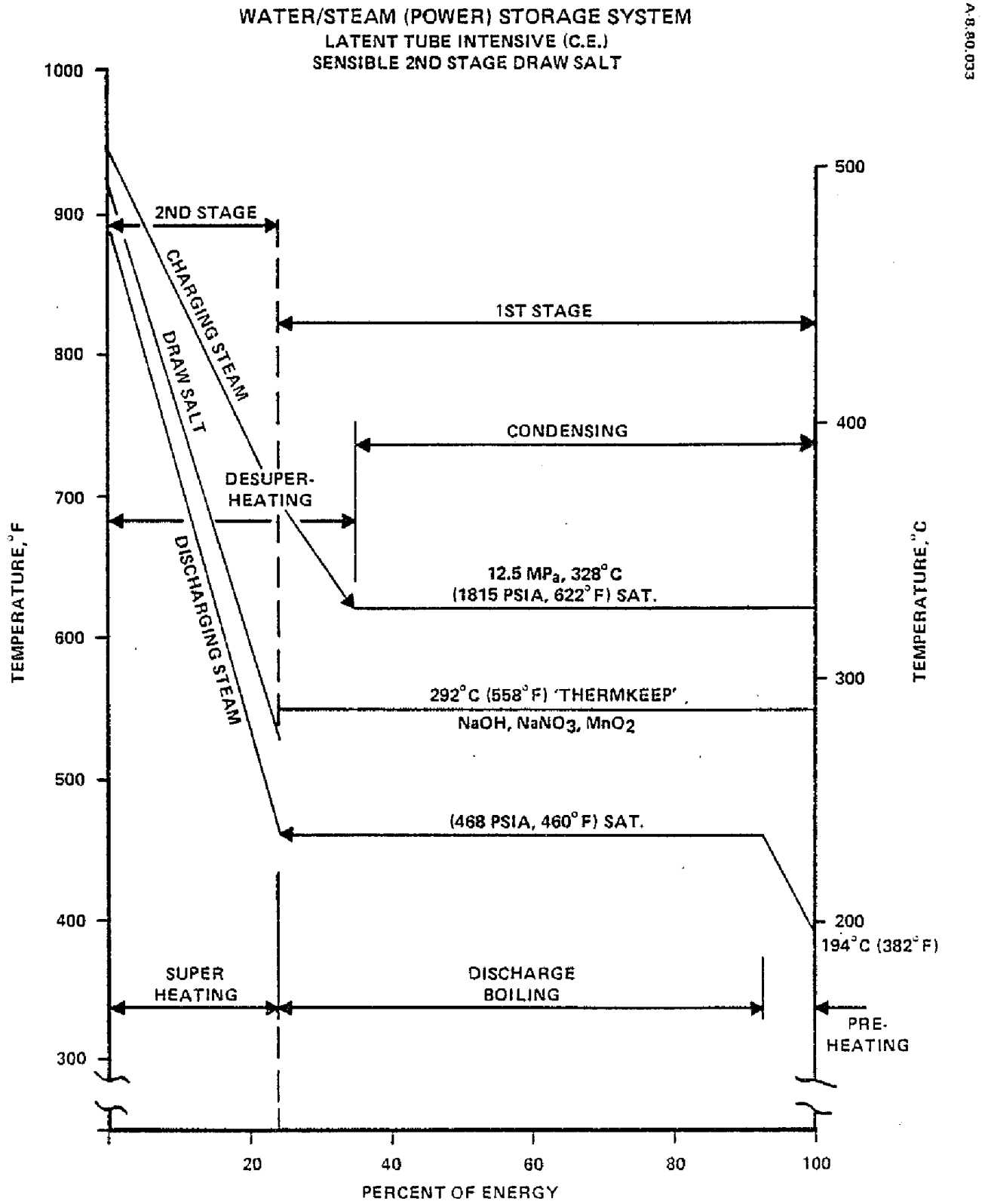

Figure 5–9. TEMPERATURE PROFILE
MODIFIED TUBE INTENSIVE HX - DRAW SALT (2-TANK)

Table 5-8. THERMAL STORAGE DESIGN DATA
WATER/STEAM RECEIVER - POWER
LATENT, TUBE INTENSIVE (C&W-CE)-DRAW SALT (2 TANK)

HOURS OF STORAGE: Six (6)

		1st STAGE		2nd STAGE	
		Modified Tube Intensive (Latent)		Draw Salt (2 Tank)	
STORAGE MEDIA					
1. Operating Temperature					
a. Hot	°C (°F)	292 (558)		496 (925)	
b. Cold	°C (°F)	292 (559)		274 (525)	
2. Quantity (Total)					
a. Salt	kg (ton)	11.68×10^6 (12,880)		3.4×10^6 (3,726)	
ENERGY RELATED EQUIPMENT					
1. Storage Capacity	$MW_t h$	1026		318	
2. Storage Tanks			Hot Tank	Cold Tank	
a. Quantity		Eight (8)	One (1)	One (1)	
b. Size, each (LxWxHt.)	m(ft)	22.9x11.4x4.0(75x37.5x13)	(Dia.xHt)16.8(55)x9.1(30)	16.8(55)x9.1(30)	
c. Material		Carbon Steel	304 SS	Carbon Steel	
d. Weight, each	kg (ton)	92,400 (102)	89,359 (98.5)	90,720 (100)	
3. Tank Insulation					
a. Type		Mineral Fiber w/Al. Lag.	Mineral Fiber w/Al. Lag.		
b. Thickness	m (ft)	0.10 (0.33)	0.25 (0.83)	0.13 (0.417)	
4. Tank Foundation					
a. Type		Concrete Mat	Concrete Mat	Concrete Mat	
b. Thickness	m (ft)	0.61(2)Insul.+1.52(5)Struct.	1.22(4)Insul. +1.52(5)Struct.	0.61(2)Insul. +1.52(5)Struct.	
c. Quantity, Total	$m^3(yd^3)$	5,588 (7,308)	608 (795)	474 (620)	
		Charging	Discharging	Charging	Discharging
POWER RELATED EQUIPMENT					
1. Steam					
a. Flow, Total	kg/s (lb/hr)	137.3(1.09×10^6)	86.65(0.6877×10^6)	137.3(1.09×10^6)	86.65(0.6877×10^6)
b. Pressure	MPa (psia)	12.5 (1,815)	3.23 (468)	12.5 (1,815)	3.1 (443)
c. Temperature	°C (°F)	372 (702)	238 (460)	510 (950)	482 (900)
2. Storage Fluid		"Thermkeep"(Wt%91.8NaOH,8$NaNO_3$,0.2 MnO_2)		Draw Salt	
Draw Salt					
a. Flow, Total	kg/s (lb/hr)	N/A	N/A	174 (1.38×10^6)	155(1.23×10^6)
b. Pressure (Tank)	MPa (psia)	Atmospheric	Atmospheric	Atmospheric	Atmospheric
c. Temperature (Pump)	°C (°F)	N/A	N/A	274 (525)	496 (525)
		Charge Htr. Drain Pumps			
3. Pumps					
a. Quantity		2-50%	N/A	2-50%	2-50%
b. Type		Barrel Type		Vert. Cantilever	Vert. Cantilever
c. Material		Carbon Steel		Carbon Steel	316 SS
d. Fluid		Sat. Cond.		Draw Salt	Draw Salt
e. Capacity, each	m^3/s (gpm)	0.106(1,683)		0.046 (730)	0.045 (710)
f. Head	m (ft)	565.4(1,855)		46.3 (152)	46.3 (152)
g. Power (Shaft), each	kWe (hp)	507 (680)		53 (71)	47 (63)
h. Motor size	kWe (hp)	522 (700)		75 (100)	56 (75)
4. Heat Exchangers[b]					
a. Quantity		240		2-50%	2-50%
b. Type		Modular Serpentine Tube Bundle		Shell & Tube	Shell & Tube
c. Material		5/8" 18 BWG A179 C.S.		304 SS	304 SS
d. Surface Area, Total	$m^2(ft^2)$	14,230 (153,150) Tubes Only		1,585(17,058)	2,614 (28,140)
e. Duty, Total	MW_t	195	171	60	53
ANNUAL ENERGY					
1. Electrical Energy	10^6kWeh	2.164[a]	0	0.225	0.228
2. Electrical Energy(Per Stg)	10^6kWeh	2.164[a]		0.453	
3. Heat Loss (Per Stg)	10^9J(10^9BTU)	13,860 (13.1)		5,191 (4.92)	

Notes:
[a]Annual Electrical Energy (Charging) Includes Charging Heater Drain Pump Power (1st Stage).
[b]Same Modular Tube Bundles Used for Charging and Discharging.

5.4.1.3 Cost Analysis

The cost estimate for the modified tube intensive thermal storage system was developed using the same unit prices (where applicable) as the other thermal storage systems in this study. A preliminary structural design for the retangular storage tanks was developed and costs were estimated based on the weight of carbon steel plate and structural shapes. Material costs for the tubing and sheet coil (for the HX enhancement sheets) were obtained from local suppliers. Tube fabrication costs (bending and welding) were quoted by a company specializing in that area, and HX enhancement sheet fabrication costs were quoted by a local sheet metal fabricator. It was estimated that the cost of installing the HX enhancement sheets in the modular tube bundle would be adequately covered by the 1.8 labor cost multiplier on the material and fabrication costs that was used to determine installed costs.

Table 5-9 shows a cost comparison the six 6-hour thermal storage systems studied for the water/steam receiver (power) cycle. The total cost, on a present worth of revenue requirements basis, compares very favorably with the Caloria/granite and underground pressurized water thermal storage concepts and is well under the initial tube intensive latent heat storage concept studied.

5.4.1.4 Discussion

The modified tube intensive heat exchanger latent heat thermal storage concept currently under study by Comstock & Wescott and Combustion Engineering appears to offer cost advantages over the other six hour thermal storage systems studied. However, there are some technical questions that need to be addressed in the development of this type of system:

1. Will the proposed serpentine coils (with long horizontal segments) be subject to slugging flow when operating in the charging (condensing) mode?

2. Can effective contact be maintained between the tubes and the heat transfer enhancement sheets?

3. Considering the very large number of tube welds required, can tube leaks be avoided and, if not, can leaks be detected, located, and repaired?

4. If carbon steel tubes are used and a leak does occur, will the resulting rapid evolution of hydrogen constitute a safety hazard?

5.4.2 Water/Steam Receiver (Process Heat)

5.4.2.1 System Description

A modified latent heat tube intensive heat exchanger 6-hour thermal storage system was also studied for the water/steam receiver (process heat) cycle.

Table 5-9. THERMAL STORAGE ECONOMIC EVALUATION
WATER/STEAM RECEIVER (POWER)

[6 Hours Storage]

STORAGE CONCEPT		COST $1000 (1980)					
1st STAGE	2nd STAGE	CE	CP	MEDIA	CI	FYVC	PWRR
Caloria/Granite (Reference)	Draw Salt (2 Tank)	3,529	5,308	5,055	40,874	2,166	108,935
Underground Press. Water	Draw Salt (2 Tank)	17,880	2,578	1,492	49,820	1,210	104,033
Tube Intensive HX (Latent) (Comstock & Wescott)	Draw Salt (2 Tank)	2,468	13,962	6,911	71,148	2,102	156,073
Modified Tube Intensive HX (Latent) (C&W-CE)	Draw Salt (2 Tank)	2,815	5,650	5,805	41,032	963	85,008
Containerized Salt (Latent) (NRL)	Draw Salt (2 Tank)	4,953	6,858	9,387	59,763	1,374	122,694
Direct Contact (Latent) (Grumman)	PCM	1,213	6,401	9,833	45,901	1,958	112,792

This system was also based on the Comstock & Wescott-Combustion Engineering concept and is quite similar to the first stage modified tube intensive system for the water/steam receiver (power) cycle; the system flow diagram is shown in Figure 5-10.

Based on the required charging and discharging steam conditions for the process heat cycle, the "dilute entectic" salt 99 wt % $NaNO_3$, 1% NaOH was selected as the thermal storage medium; this salt was also selected for the latent continerized salt (NRL) system for the water/steam receiver (process heat) cycle. The temperature profile is shown in Figure 5-11. Some physical data for pure $NaNO_3$ was used in sizing the system; for the tube intensive heat exchanger design a 100% $NaNO_3$ salt medium would serve just as well and would cost essentially the same. Due to a lower heat of fusion for 99% $NaNO_3$, 1% NaOH than for "Thermkeep", and also due to the somewhat higher thermal storage capacity required for the process cycle than for the power cycle, twice as many rectangular storage tanks (16 vs. 8) were required. Tube spacing and heat transfer enhancement sheet spacing of the C&W-CE design were retained; the required overall heat transfer coefficient (based only on outside tube area) is lower by about 5% than the C&W-CE design.

5.4.2.2 Thermal Storage Design Data

The conceptual design data for the modified tube intensive heat exchanger 6-hour thermal storage system for the water/steam receiver (process heat) cycle is shown in Table 5-10.

5.4.2.3 Cost Analysis

Most components are common to the first stage latent heat tube intensive (C&W-CE) heat exchanger 6-hour thermal storage system studied for the water/steam receiver (power cycle). Costs estimates that were developed for those components were used without modification. Thermal storage media costs were determined previously for the latent heat boiler tank (NRL) thermal storage system, as were the drain pumps.

Table 5-11 shows a cost comparison with the other three 6-hour thermal storage systems studied for the water/steam receiver - process heat cycle. The modified tube intensive (C&W-CE) concept is second (to the underground pressurized water concept) lowest in cost.

5.4.2.4 Discussion

The discussion comments relative to the latent heat tube intensive (C&W-CE) heat exchanger concept for the power cycle (Section 5.4.1.4) also apply here.

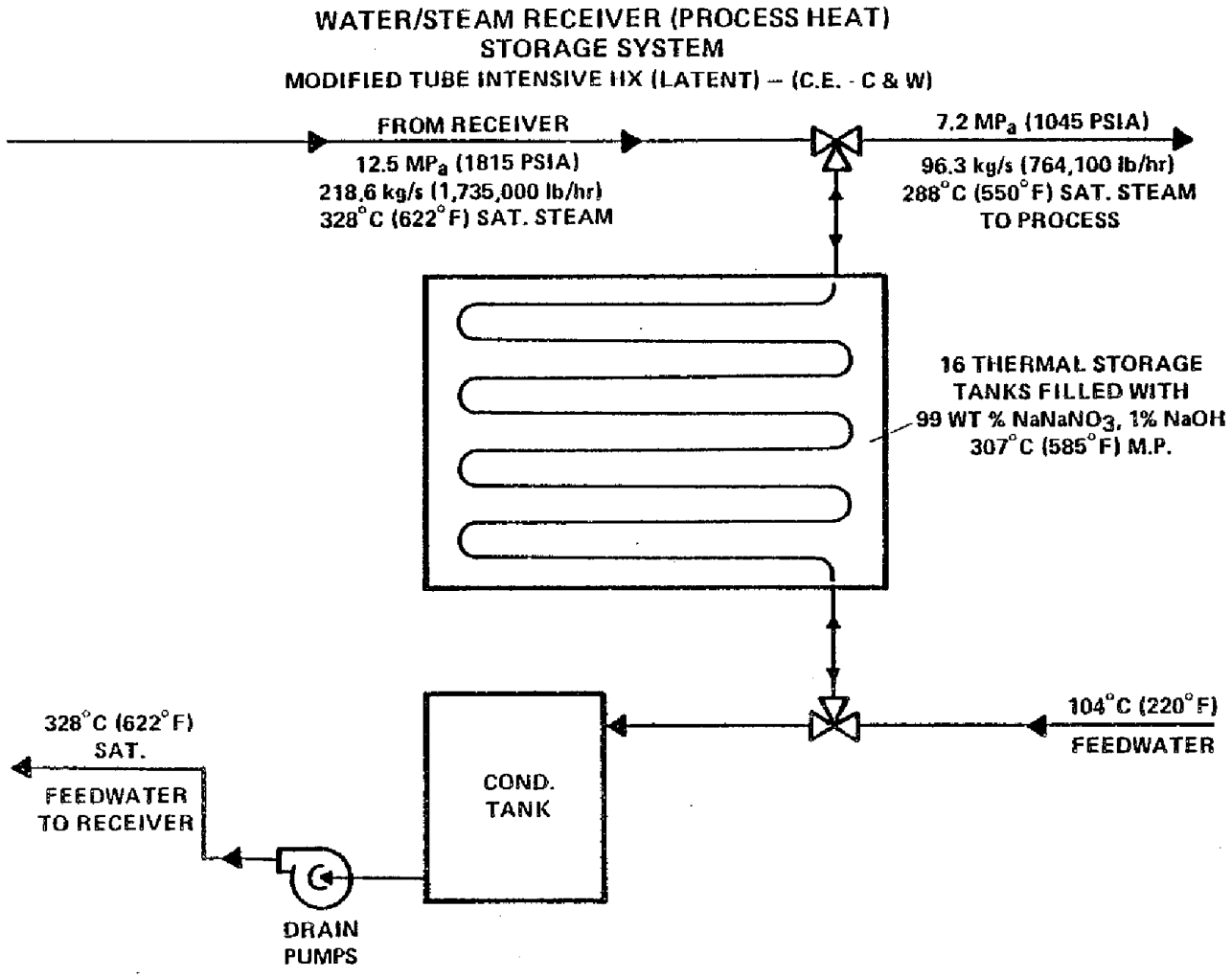

Figure 5–10. THERMAL STORAGE SYSTEM
MODIFIED TUBE INTENSIVE HX (LATENT)

A-B-80-060

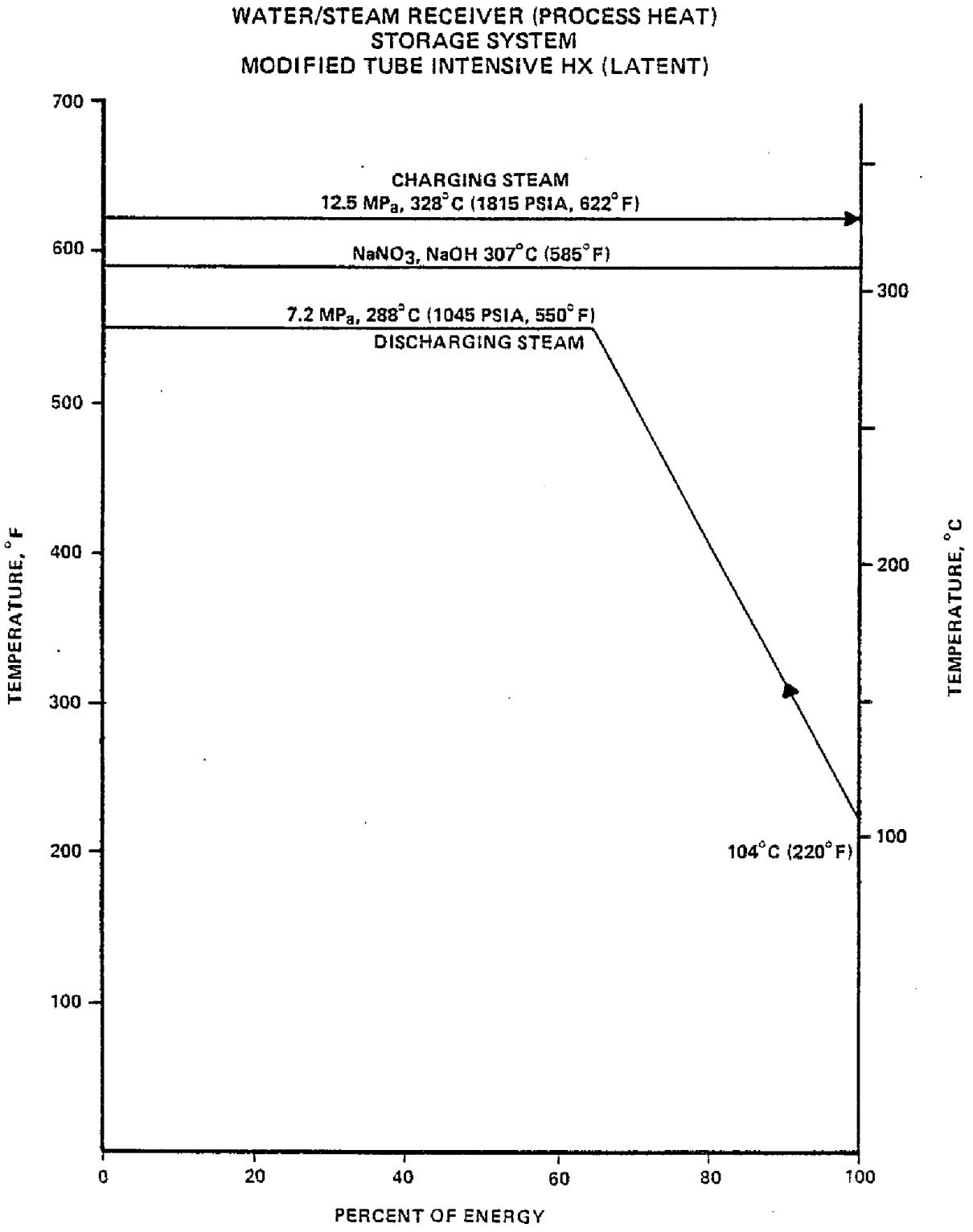

Figure 5–11. TEMPERATURE PROFILE
MODIFIED TUBE INTENSIVE HX

Table 5-10. THERMAL STORAGE DESIGN DATA
WATER/STEAM RECEIVER - PROCESS HEAT
LATENT, TUBE INTENSIVE (C&W-CE)

HOURS OF STORAGE: Six (6)

		STAGE 1 OF 1
		Modified Tube Intensive (Latent)
STORAGE MEDIA		
1. Operating Temperature		
a. Hot	°C (°F)	307 (585)
b. Cold	°C (°F)	307 (585)
2. Quantity (Total)		
a. Salt	kg (ton)	27.36×10^6 (30,160)
ENERGY RELATED EQUIPMENT		
1. Storage Capacity	$MW_t h$	1,344
2. Storage Tanks		
a. Quantity		Sixteen (16)
b. Size, each (LxWxHt.)	m(ft)	22.9 x 11.4 x 4.0 (75 x 37.5 x 13)
c. Material		Carbon Steel
d. Weight, each	kg (ton)	92,400 (102)
3. Tank Insulation		
a. Type		Mineral Fiber w/Al. Lag.
b. Thickness	m (ft)	0.10 (0.33)
4. Tank Foundation		
a. Type		Concrete Mat
b. Thickness	m (ft)	0.61(2)Insulating +1.52(5)Structural
c. Quantity, Total	$m^3(yd^3)$	11,176 (14,616)

		Charging	Discharging
POWER RELATED EQUIPMENT			
1. Steam			
a. Flow, Total	kg/s (lb/hr)	218.6 (1.735×10^6)	96.28 (764,100)
b. Pressure	MPa (psia)	12.5 (1,815)	7.2 (1,045)
c. Temperature	°C (°F)	328 (622)	288 (550)
2. Storage Fluid		Salt (Wt % 99 $NaNO_3$, 1 NaOH)	
a. Flow, Total	kg/s (lb/hr)	N/A	
b. Pressure (Tanks)	MPa (psia)	Atmospheric	
c. Temperature (Pump)	°C (°F)	N/A	
		Charge Htr. Drain Pumps	
3. Pumps			
a. Quantity		2-50%	N/A
b. Type		Barrel Type	
c. Material		Carbon Steel	
d. Fluid		Sat Cond.	
e. Capacity, each	m^3/s (gpm)	0.171 (2,704)	
f. Head	m (ft)	565.4 (1,855)	
g. Power (Shaft), each	kWe (hp)	916 (1,228)	
h. Motor size	kWe (hp)	930 (1,250)	
4. Heat Exchangers[b]			
a. Quantity		480	
b. Type		Modular Serpentine Tube Bundle	
c. Material		5/8" Dia., 18 BWG, A179 C.S.	
d. Surface Area, Total	$m^2(ft^2)$	28,460 (306,300) Tubes Only	
e. Duty, Total	MW_t	255	224
ANNUAL ENERGY			
1. Electrical Energy	10^6kWeh	3.915[a]	0
2. Electrical Energy(Per Stg)	10^6kWeh	3.915[a]	
3. Heat Loss (Per Stg)	10^9J(10^9BTU)	29,540 (28.0)	

Notes:
[a]Annual Electrical Energy (Charging) Includes Charging Heater Drain Pump Power
[b]Same Modular Tube Bundles Used for Charging and Discharging.

Table 5-11. THERMAL STORAGE ECONOMIC EVALUATION
WATER/STEAM RECEIVER (PROCESS HEAT)

[6 Hours Storage]

STORAGE CONCEPT	COST $1,000 (1980) CE	CP	MEDIA	CI	FYVC	PWRR
Caloria/Granite (Reference)	8,803	7,904	11,297	80,671	6,312	255,941
Underground Pressurized Water	20,482	642	6	44,543	1,105	93,480
Containerized Salt (Latent) (NRL)	10,316	7,737	14,374	91,392	2,092	188,277
Modified Tube Intensive HX (Latent) (C&W-CE)	3,904	7,438	5,127	49,807	1,331	106,450

SECTION 6.0

CONCLUSIONS AND RECOMMENDATIONS

6.1 CONCLUSIONS

In accordance with the objective of this study, cost and performance data have been provided for several thermal storage concepts in several solar thermal systems in order to identify promising thermal storage concepts. Based on the study requirements and economic parameters used, the following conclusions can be made relative to the thermal energy storage (TES) concepts studied.

6.1.1 Water/Steam Receiver TES Concepts (Power)

For the water/steam receiver power application the following conclusions can be made:

- The reference system, i.e. Caloria/granite 1st stage, draw salt (2 tank) 2nd stage, provided the lowest evaluated cost below 6 hours of storage of the sensible heat storage systems studied.
- Underground pressurized water storage (steel-lined cavern) is the most economical 1st stage concept above 6 hours of storage; however its technical risk is judged to be high.
- Latent heat storage utilizing direct-contact heat exchanger in a 2-stage configuration (latent and sensible) appears promising above 6 hours of storage; however the system is somewhat complex.
- The modified tube intensive latent heat storage system with enhanced heat exchange surface as conceptually designed by Combustion Engineering and Comstock and Wescott appears very attractive for the case studied; however, proof-of-concept experiments have not been made.
- Fluid degradation and replacement cost become significant in dual-media systems as storage time increases.

6.1.2 Water/Steam Receiver TES Concepts (Process Heat)

The following conclusions can be made for the water/steam receiver process heat application:

- Large storage volume owing to low storage delta-T favors underground pressurized water storage (steel-lined cavern) by a wide margin.
- Containment costs and fluid costs penalize dual-media storage systems.
- Latent heat storage provides the lowest cost above-ground storage concept for this application. The modified tube intensive latent heat storage concept looks best in this case.

6.1.3 Organic Fluid Receiver TES Concepts

For the 399°C (750°F) organic fluid receiver total energy system the following conclusions can be made:

- The reference Syltherm 800/taconite trickle charge storage concept is best below approximately 7 hours of storage.
- The direct contact 2-stage latent heat storage resulted in the lowest evaluated cost above approximately 7 hours of storage.
- The fluid loss penalty for Dow Corning's Syltherm 800 is significant at 399°C (750°F) operating temperature. An alternate fluid, Monsanto MCS 1980, has been identified as a promising organic heat transfer fluid for 399°C (750°F) operation.

For the 310°C (590°F) organic fluid receiver process heat case nothing was identified with more promise than Caloria/granite or Caloria only (2 tank).

6.1.4 Closed Air Brayton Receiver TES Concepts

For the closed air Brayton receiver power application the following conclusions can be made:

- Nothing was identified with significantly more promise than the air/alumina brick (reference system) sensible heat storage concept.
- A latent heat storage concept utilizing a tube intensive heat exchanger and floride salts (as proposed by Boeing) appears to offer an initial cost savings, however lower turbine cycle efficiencies and higher receiver gas flows will result in poorer overall performance. Also material compatibility problems are of major concern with latent heat storage at high temperature.

6.2 RECOMMENDATIONS

The final recommendations for thermal storage system development will be made by SERI; however, some general recommendations can be made based on the results of this study.

- Owing to its low evaluated cost, underground pressurized water storage should be pursued further, particularly for large storage system applications.
- Development of latent heat storage concepts should continue. Particular attention should be given to enhanced surface heat exchangers.
- Heat transfer fluid stability at elevated temperatures needs to be better defined. Dynamic fluid test loops simulating actual operating conditions in both single and dual-media storage systems would be desirable.

SECTION 7.0

REFERENCES

1. Durrant, O.W., Wiener, M., Summary of final report on solar advanced steam/water receiver. Presented at the U.S. Department of Energy Central Receiver Semi-Annual Meeting, Albuquerque, New Mexico, March 19-20, 1980.

2. A Solar Total Energy - Large Scale Experiment at Shenandoah, Georgia, Phase III, Preliminary Design. Final Report, 78SDS4243, General Electric Company, September 1978.

3. Davidson, W. S., et al, Closed Brayton Cycle Advanced Central Receiver Solar - Electric Power System. Final Report (Volume II). SAN/1726-1, Boeing Engineering & Construction Company, November 1978.

4. Cohen, Barry M., Rice, Richard E., Rowny, Peter E., Development of a Phase-Change Thermal Storage System Using Modified Anhydrous Sodium Hydroxide for Solar Electric Power Generation. DOE/NASA/0615-79/1. NASA CR-159465, Comstock & Wescott, Inc., December 1978.

5. Alario, Joseph, Kosson, Robert, Haslett, Robert, Active Heat Exchange System Development for Latent Heat Thermal Energy Storage. Topical Report. DOE/NASA/0039-79/1. NASA CR159726. GAC TR 1681-09, Grumman Aerospace Corporation, January 1980.

6. Chubb, T.A., Nemecek, J. J., Simmons, D.E., Energy Storage As Heat-of-Fusion in Containerized Salts. Project 71-0937-0-0, Naval Research Laboratory, Published April 1980.

7. LeFrois, R.T., et al, Active Heat Exchange System Development for Latent Heat Thermal Energy Storage. DOE/NASA/0038-79/1. NASA CR 159479. HI 79063, Honeywell, Inc. - ERC, February 1979.

8. Petri, Randy J., et al, High Temperature Molten Salt Thermal Energy Storage Systems. DOE/NASA/0806-79/1. NASA CR-159663, Institute of Gas Technology, February 1980.

9. Burolla, V.P., Prediction of Yearly Fluid Replishment Rates for Hydrocarbon Fluids in Thermal Energy Storage Systems. SAND79-8029, Sandia Laboratories, printed April 1979.

10. Conceptual Design of Advanced Central Receiver Power Systems Sodium - Cooled Receiver Concept. Final Report. SAN-1483-1, Rockwell International, Energy Systems Group, March 1979.

11. Moving Bed Thermal Energy Storage System. B&W Prospectus R&D 79-162, Babcock & Wilcox, Lynchburg, Virginia. Presentation at SERI on January 24, 1980.

12. Dooley, James L., et al, A Feasibility Study of Underground Energy Storage Using High-Pressure, High-Temperature Water. Final Report. RDA-TR-7100-001, R&D Associates, Marina del Rey, California, January 1977.

13. Hall, E. W., et al, Conceptual Design of Thermal Energy Storage Systems for Near Term Electric Utility Applications. Final Report. DOE/NASA/0012-79/2. NASA CR 159577. EPRI Project RP1082-1, General Electric Company, July 1979.

14. Collins, R.E., et al, The Univeristy of Houston, Davis, K.E., et al, Subsurface, Inc., High Temperature Underground Thermal Energy Storage. Presented at DOE Conference on Underground Energy Storage, Lawrence Berkeley Laboratory, 1978.

15. Telephone conversation. R. M. Porter, Stearns-Roger and Dr. R. E. Collins, University of Texas, September 26, 1980.

16. Telephone conversation. A. W. McKenzie, Stearns-Roger and Gerry diLauro, Combustion Engineering, Inc., January 15, 1981.

17. Telephone conversation. D. J. Liffengren, Stearns-Roger and Dr. T. A. Chubb, Naval Research Laboratory, July 22, 1980.

18. Personal communication. V. P. Burolla, Sandia Laboratories, Livermoree, to R. M. Porter, Stearns-Roger, June 30, 1980, with reference to fluid degradation tests of Dow Corning and Monsanto heat transfer fluids.

19. Gilli, P.V., Beckman, G., Shilling, F.E., Thermal Energy Storage Using Prestressed Cast Iron Vessels (PCIV). Final Report. COO/2886-2, Zivillingenieur fuer Mashinenbau, Graz, Austria, Published June 1977. (Prepared for the U.S. Energy Research and Development Administration, Office of Conservation, Division of Energy Storage Systems).

20. Technical Assessment Guide. PS-1201-SR, Prepared by the Technical Assessment Group of Electric Power Research Institute, Inc. (EPRI), Palo Alto, California, July 1979.

21. Central Receiver Solar Thermal Power System, Phase I: Preliminary Design Report. Volume 5. Thermal Storage Subsystem. SAN/1110-77-2 (Vol. 5), Martin Marietta Corporation, April 1977.

22. Advanced Thermal Energy Storage Concept Definition Study for Solar Concept Definition Study for Solar Brayton Power Plants - Volume I. Final Technical Report, July 1 - December 31, 1976. SAN/1300-1, Boeing Engineering and Construction, November 1977.

23. Cameron Hydraulic Data, Fourteenth Edition, Ingersoll-Rand Company.

APPENDIX A

LITERATURE REVIEW SUMMARY FORM

STEARNS-ROGER

SHEET _____
REVIEWER _____
DATE _____

"THERMAL STORAGE CONCEPTS IN SOLAR THERMAL SYSTEMS"

S-R CE FILE NO. _____ DOC NO. WITHIN DOC. _____
S-R CE PROJECT NO. C-23681 SERI: RFP RP-0-8001
DOC. TITLE _____

DOC. NO. _____
AUTHOR'S _____
COMPANY _____ DATE: _____
PREPARED FOR: _____
STORAGE? NONE SENSIBLE LATENT OTHER _____ (CIRCLE)
TEMPERATURE RANGE? $<$ 100°C 212°F $<$ 300°C 572°F $<$ 500°C 932°F $>$ 500°C 932°F (CIRCLE)

APPLICABLE? NO H_2O/STM ORGANIC AIR/BRAYTON PROCESS (CIRCLE)
TYPE OF MATERIALS? _____
(SAND, OIL, SALT _____
ROCKS, ETC.) _____

CAP. INVEST. COSTS INCLD. YES NO; (CIRCLE)
POWER RELATED COSTS INCLD. YES NO; (CIRCLE)
STORAGE CAPACITY INCLD. YES NO; (CIRCLE) _____ HOURS
DOC. SUMMARY: _____

RECOMMENDATIONS: _____

APPENDIX B

THERMAL STORAGE ECONOMIC EVALUATION FORMS

STEARNS-ROGER C-23681

THERMAL STORAGE ECONOMIC EVALUATION

By: _____ Date: _____
Chk'd: _____ Date: _____ Receiver Type: _____
Rev.: _____ Date: _____ Cycle: _____

Storage Concept: _____ Stage: _____ Hrs. of Storage _____
Type: _____

Item	Description	Qty	Unit	Unit Cost	Total Cost ($1,000)
1	Energy Related Equipment (CE)				
	Tanks				
	Tank Insulation				
	Piping/Foundations				
	Miscellaneous				
	Heat Tracing				
	Subtotal (CE) (Energy Related Equipment) =				
2a	Power Related Costs - Charge (CP-C)				
	Pumps/Comp.				
	Heat Exch.				
	Other				
	Subtotal (CP-C) (Power Related Equipment-Charging) =				

STEARNS-ROGER C-23681
By: _____ Date: _____ THERMAL STORAGE ECONOMIC EVALUATION
Chk'd: _____ Date: _____ Receiver Type: _____
Rev.: _____ Date: _____ Cycle: _____

Storage Concept: _____ Stage: _____ Hrs. of Storage _____
Type: _____

Item	Description	Qty	Unit	Unit Cost	Total Cost ($1,000)
2b	Power Related Costs - Discharge (CP-D)				
	Pumps/Comp.				
	Heat Exch.				
	Other				
	Subtotal (CP-D) (Power Related Costs - Discharging) =				
2c	Subtotal (CP) (Total Power Related Costs) = Line 2a + Line 2b =				
3	Total Material Costs (MC) Line 1 + Line 2c =				
4	Storage Media Cost (SC)				
	Total Storage Media Cost (SC) =				

5 Total Matl. Costs x Const. Cost Factor = (MC x CF) = Line 3 x 1.8 = _____

6 Total Instal'd Costs (Matl+Media)(MCxCF)+(SC) = Line 5 + Line 4 = _____

7 Capital Investment (CI)

(a) Charge (CI-C) = (Line 2a)(1.8)(1.95) = _____ (7a)
(b) Discharge (CI-D) = (Line 2b)(1.8)(1.95) = _____ (7b)
(c) Total Capital Investment (CI) = (Line 6)(1.95) = (7c) _____

STEARNS-ROGER C-23681
By:_____ Date:_____
Chk'd:_____ Date:_____
Rev.:_____ Date:_____

THERMAL STORAGE ECONOMIC EVALUATION
Receiver Type:_____
Cycle:_____

Storage Concept:_____ Stage: _____ Hrs. of Storage_____
Type:_____

Item

8 First Year Variable Costs (FYVC)

Operation & Maintenance (O&M)	Charging ($1,000)	Discharging ($1,000)	Total ($1,000)
(a) Charge _____% of (Line 7a) =	_____(8a)		
(b) Discharge _____% of (Line 7b) =		_____(8b)	
(c) Total O&M _____% of Line 5 x 1.95=		(8c)	_____

Energy

(d) Charge_____kWh @ ____¢/kWh = _____ (8d)
(e) Discharge_____kWh @ _____¢/kWh = _____(8e)
(f) Total Energy = (Line 8d + Line 8e) = (8f)_____
(g) Total Charge (FYVC) = (Line 8a +8d)= _____(8g)
(h) Total Discharge (FYVC) = (Line 8b + Line 8e) = _____(8h)

Chemical Usage	Qty.	Unit	Unit Cost	Total Cost ($1,000)

(i) Total Chemical Usage (8i) _____

(j) Total (FYVC) = O&M (line 8c) + E (line 8f)+ Chem (line 8i) = (8j) _____

9 Major Replacement Costs (RC)

Item	Descrip.	Replace Cost (RC) ($1,000)

10. Present Worth Replacement Costs(PWRC)
n = ((30/x)-1)

Cycle Year (X)	Integer (n)	PWRC* ($1000)

$$*PWRC = RC \sum_{k=1}^{n} (0.9727)^{kx}$$

Total (PWRC) = _____

11. Present Worth Revenue Requirements (PWRR) ($1,000)

PWRR = PWFC + PWVC + PWRC
PWFC = 1.6CI
PWVC = 20.1 FYVC

$$PWRC = RC \sum_{k=1}^{n} (0.9727)^{kx}$$

CHARGE = 1.6 (Line 7a) + 20.1 (Line 8g)

PWRR-C = _____ + _____ = _____

DISCHG. = 1.6 (Line 7b) + 20.1 (Line 8h)

PWRR-D = _____ + _____ = _____

TOTAL PWRR = 1.6 (Line 7c) + 20.1 (Line 8j)+ (Line 10)

= _____ + _____ + _____ = _____

APPENDIX B (Continued)

STEARNS-ROGER C-23681
By: _____ Date: _____
Chk'd: _____ Date: _____
Rev.: _____ Date: _____

THERMAL STORAGE ECONOMIC EVALUATION
Receiver Type: _____
Cycle: _____

Storage Concept: _____ Stage: _____ Hrs. of Storage _____
Type: _____

Storage Concept: _____ Stage: _____
Type: _____

--COMBINED COST SHEET -- STAGES (1 & 2)

ITEM	Total Cost $1000	ITEM	Total Cost $1000
1 (CE) STG 1 = _____		7c (CI) STG 1 = _____	
STG 2 = _____		STG 2 = _____	
TOTAL (CE) =	_____	TOTAL (CI) =	_____
2c (CP) STG 1 = _____		8j (FYVC) STG 1 = _____	
STG 2 = _____		STG 2 = _____	
TOTAL (CP) =	_____	TOTAL FYVC =	_____
4 MEDIA (SC) STG 1 = _____		11 (PWRR) STG 1 = _____	
STG 2 = _____		STG 2 = _____	
TOTAL MEDIA SC =	_____	TOTAL PWRR =	_____

ITEM	Total Cost $1000	ITEM	Total Cost $1000
2a (CP-C) STG 1 = _____		2b (CP-D) STG 1 = _____	
STG 2 = _____		STG 2 = _____	
TOTAL CP-C =	_____	TOTAL CP-D =	_____
7a (CI-C) STG 1 = _____		7b (CI-D) STG 1 = _____	
STG 2 = _____		STG 2 = _____	
TOTAL CI-C =	_____	TOTAL CI-D =	_____
8g (FYVC-C) STG 1 = _____		8h (FYVC-D) STG 1 = _____	
STG 2 = _____		STG 2 = _____	
TOTAL FYVC-C =	_____	TOTAL FYVC-D =	_____
11 (PWRR-C) STG 1 = _____		11 (PWRR-D) STG 1 = _____	
STG 2 = _____		STG 2 = _____	
TOTAL PWRR-C =	_____	TOTAL PWRR-D =	_____

APPENDIX C

A PRELIMINARY REGIONAL SURVEY OF AREAS WHERE UNDERGROUND EXCAVATION FOR HOT WATER STORAGE MIGHT PROVE FEASIBLE

APPENDIX C

A PRELIMINARY REGIONAL SURVEY OF AREAS WHERE UNDERGROUND EXCAVATION FOR HOT WATER STORAGE MIGHT PROVE FEASIBLE [12]

State & City	Probable Rock Type	Approx. Age (Million Yr)	Excavation Class	Remarks
Alabama				
Burmingham	Limestone	450-600	2	Regional
Montgomery	Granite	270+	1-2	Regional, Also Metramorphics
Alaska				
Anchorage	Sandstone	170	3-4	Regional
Fairbanks	Metamorphics	+600	2	Regional
Arizona				
Tucson	Granite	135	1-4	In the Vicinity
Phoenix	Metamorphics	+600	2-3	In the Vicinity
	Salt (Massive)	50?	1	In the Vicinity
Arkansas				
Little Rock	Limestone Shale	325	2-3	Regional
Ft. Smith	Sandstone Shale	300	3	Regional
California				
Los Angeles	Granite	190	2-3	East of San Gabriel Valley to Colorado River
	Metamorphics	+600	2-3	
San Diego	Granite	190	1-2	Inland From Coast
Central Valley Cities	Granite	190	1-2	Eastern Border of Valley (Sierra Nevada)
Colorado				
Denver, Boulder, Colorado Springs	Shale, Lime-Stone, Sand-Stone	275	3-4	Regional
Pueblo	Limestone, Shale	100	3	Regional
Connecticut				
Hartford	Granite	270+	1-2	In the Vicinity
New Haven	Granite	270+	1-2	In the Vicinity
New Bedford	Granite	270+	1-2	In the Vicinity

APPENDIX C (Continued)

A PRELIMINARY REGIONAL SURVEY OF AREAS
WHERE UNDERGROUND EXCAVATION FOR HOT WATER STORAGE
MIGHT PROVE FEASIBLE [12]

State & City	Probable Rock Type	Approx. Age (Million Yr)	Excavation Class	Remarks
Georgia				
Atlanta	Granite	270+	1-2	Regional
Augusta/ Macon	Granite or Metamorphics	450+	2-3	Regional
Hawaii				
Honolulu/Hilo	Basalt	0.1-2.5+	4-5	Regional
Idaho				
Boise	Granite	140	1-2	In the Vicinity
Idaho Falls/ Twin Falls	Basalt	1	4-5	Regional
Cour D'Alene	Metamorphics	600+	2-3	Regional
Pocatella	Metamorphics	350-600+	2-3	Regional
Illinois				
Springfield	Limestone, Sandstone, Shale	300	3	Regional
Indiana				
Indianapolis	Limestone	400	2	Regional
Iowa				
Debuque	Granite, Metamorphics	600+	1-2	Regional
Souix City	Granite, Metamorphics	600+	1-2	Regional
Kansas				
Kansas City	Limestone	550	2	Regional
Wichita	Limestone	290	2	Regional
Kentucky				
Louisville	Limestone	500	2	Regional
Frankfort	Limestone	500	2	Regional
Louisiana				
leans	Salt Domes	-	1	In the Vicinity
port	Salt Domes	-	1	In the Vicinity
louge	Salt Domes	-	1	In the Vicinity

APPENDIX C (Continued)

A PRELIMINARY REGIONAL SURVEY OF AREAS
WHERE UNDERGROUND EXCAVATION FOR HOT WATER STORAGE
MIGHT PROVE FEASIBLE [12]

State & City	Probable Rock Type	Approx. Age (Million Yr)	Excavation Class	Remarks
Maine				
Portland	Granite	450+	1-2	In the Vicinity
Augusta	Granite	450+	1-2	In the Vicinity
Maryland				
Baltimore	Granite Metamorphics	350-600+	1-2	Regional
Michigan				
Detroit	Limestone	500	2	Regional
Minnesota				
Minneapolis/ St. Paul	Metamorphics	600+	2	Regional
Rochester	Metamorphics	600+	2	Regional
Mississippi				
Jackson	Salt Domes	-	1	In the Vicinity
Hattiesburg	Salt Domes	-	1	In the Vicinity
Missouri				
Kansas City/ St. Louis	Limestone	300+	2-3	Regional
Joplin	Granite, Metamorphics	600+	1	Regional
Springfield	Granite, Metamorphics	600+	1	Regional
Montana				
Great Falls	Metamorphics	500+	2-3	Regional
Helena/Butte	Granite	40	1	Regional
Missoula	Metamorphics	500+	2-3	Regional
Billings	Shale	100	3	Regional
Nebraska				
Lincoln/Omaha	Metamorphics	600+	2	Regional
Nevada				
Las Vegas	Granite, Limestone, Metamorphics	20,270,600+	1-3	In the Vicinity
Reno	Granite	190	1-2	In the Vicinity

APPENDIX C (Continued)

A PRELIMINARY REGIONAL SURVEY OF AREAS
WHERE UNDERGROUND EXCAVATION FOR HOT WATER STORAGE
MIGHT PROVE FEASIBLE [12]

State & City	Probable Rock Type	Approx. Age (Million Yr)	Excavation Class	Remarks
New Hampshire				
Concord	Granite, Metamorphics	600+	1-2	In the Vicinity
Portsmouth	Granite Metamorphics	600+	1-2	In the Vicinity
New Jersey				
Trenton	Granite, Metamorphics	600+	1-2	Regional
New Mexico				
Albuquerque/ Santa Fe	Metamorphics	600+	2-3	In the Vicinity
Rosewell/ Carlsbad	Limestone	250	2	Regional
Alamogordo	Limestone	275	2	Regional
Farmington	Shale	100	3	Regional
New York				
New York City	Granite, Metamorphics	600+	1-2	Regional
Watertown	Granite, Metamorphics	600+	1-2	Regional
Utica	Granite, Metamorphics	600+	1-2	Regional
Buffalo	Limestone	500	2	Regional
North Carolina				
Charlotte	Granite	270	1	Regional
Greensboro	Granite	270	1	Regional
Winston-Salem	Metamorphics	350+	2-3	Regional
Raleigh	Metamorphics	350+	2-3	Regional
Fayetteville	Metamorphics	270+	2-3	Regional
North Dakota				
Grand Forks/ Fargo	Granite, Metamorphics	600+	1-2	Regional
Ohio				
Cincinnati	Limestone	500	2	Regional
Cleveland	Limestone	450	2	Regional
Columbus	Limestone	500	2	Regional

APPENDIX C (Continued)

A PRELIMINARY REGIONAL SURVEY OF AREAS
WHERE UNDERGROUND EXCAVATION FOR HOT WATER STORAGE
MIGHT PROVE FEASIBLE [12]

State & City	Probable Rock Type	Approx. Age (Million Yr)	Excavation Class	Remarks
Oklahoma				
Oklahoma City	Limestone	290	2	Regional
Tulsa	Limestone, Metamorphics	470-600+	1-2	Regional
Oregon				
Portland/ Eugene	Basalt	20-50	4-5	Regional
Albany/Bend	Basalt	20-50	4-5	Regional
Pennsylvania				
Philadelphia	Granite, Metamorphics	600+	1-2	Regional
Pittsburgh	Limestone Sandstone, Shale	300	3	Regional
Rhode Island				
Providence	Granite, Metamorphics	600+	1-2	Regional
South Carolina				
Greenville	Granite, Metamorphics	270+	2	Regional
Columbia	Granite, Metamorphics	270+	2	Regional
Charleston	Shale	100-270+	3	Regional
South Dakota				
Sioux Falls	Granite, Metamorphics	600+	1-2	Regional
Rapid City	Granite, Metamorphics	600+	1-2	In the Vicinity
Tennessee				
Nashville	Limestone	500	2	Regional
Knoxville	Limestone	500	2	Regional
Chattanooga	Limestone	450	2	Regional

APPENDIX C (Continued)

A PRELIMINARY REGIONAL SURVEY OF AREAS
WHERE UNDERGROUND EXCAVATION FOR HOT WATER STORAGE
MIGHT PROVE FEASIBLE [12]

State & City	Probable Rock Type	Approx. Age (Million Yr)	Excavation Class	Remarks
Texas				
Austin	Shale	305	4	Regional
Dallas	Limestone, Shale	80	3-4	Regional
Ft. Worth	Limestone	100	2-3	Regional
Amarillo/ Lubbock	Sandstone, Shale	-	4-5	Regional
Houston/ Galveston	Salt Domes	-	1	In the Vicinity
Corpus Christy/ Beaumont	Salt Domes	-	1	In the Vicinity
Utah				
Salt Lake City	Limestone	300	2-3	In the Vicinity
Ogdon	Limestone	300	2-3	In the Vicinity
Provo	Granite, Metamorphics	600+	1-2	In the Vicinity
Kanab	Limestone	325	2	Regional
Vermont				
Burlington	Limestone, Shale, Sandstone, Metamorphics	300-600+	2-4	Regional
Rutland	Limestone, Shale, Sandstone, Metamorphics	300-600+	2-4	Regional
Virginia				
Charlottesville	Granite, Metamorphics	350+	1-2	Regional
Roanoke/ Arlington	Granite, Metamorphics	350+	1-2	Regional
Richmond	Granite, Metamorphics	350+	1-2	Regional
Washington				
Spokane	Metamorphics	600+	2	Regional
Olympia	Basalt	20-50	4-5	Regional

APPENDIX C (Concluded)

A PRELIMINARY REGIONAL SURVEY OF AREAS
WHERE UNDERGROUND EXCAVATION FOR HOT WATER STORAGE
MIGHT PROVE FEASIBLE [12]

State & City	Probable Rock Type	Approx. Age (Million Yr)	Excavation Class	Remarks
Washington, DC	Granite, Metamorphics	350+	1-2	Regional
West Virginia				
Charleston	Sandstone, Shale, Coal	280	3-5	Regional
Wheeling	Sandstone, Shale, Coal	280	3-5	Regional
Wisconsin				
Madison	Granite, Metamorphics	600+	1-2	Regional
Sparta/ Oshkosh	Granite, Metamorphics	600+	1-2	Regional
Wyoming				
Casper	Limestone, Shale, Sandstone	275	3	Regional
Laramie	Limestone, Shale, Sandstone	275	3-4	Regional

APPENDIX D

CHARGING HEATER DRAIN PUMP DESIGN DATA

APPENDIX D

Table D-1. CHARGING HEATER DRAIN PUMP DESIGN DATA
WATER/STEAM RECEIVER (POWER)

Applicable 1st Stage Storage Concepts
Caloria/Granite (Reference)
Underground Solution - Mined
Caloria (2-Tank)

		Storage Time - Hours		
		1	6	15
Quantity		1-100%	2-50%	2-50%
Type		Barrel	Barrel	Barrel
Material		Carbon Steel with Alloy Steel Trim		
Fluid		Condensate	Condensate	Condensate
Flow (Total)	kg/s (lb/hr)	19(150,000)	114(905,500)	213(1,687,000)
Capacity, each	m^3/s (gpm)	0.024(384)	0.073(1,150)	0.14(2,150)
Suction Pressure	MP_a(psia)	12.5(1,815)	12.5(1,815)	12.5(1,815)
Suction Temperature	°C (°F)	260(500)	260(500)	260(500)
Head	m (ft)	518(1,700)	565(1,855)	605(1,985)
Power (shaft), each	kWe (hp)	138(185)	451(604)	901(1,208)
Motor Size	kWe (hp)	149(200)	448(600)	933(1,250)

Applicable 1st Stage Storage Concept
Tube Intensive HX (Latent)

		Storage Time - Hours		
		1	6	15
Quantity		2-50%	2-50%	2-50%
Type		Barrel	Barrel	Barrel
Material		Carbon Steel with Alloy Steel Trim		
Fluid		Condensate	Condensate	Condensate
Flow (Total)	kg/s (lb/hr)	12.6(171,170)	129(1,027,000)	241(1,914,000)
Capacity, each	m^3/s (gpm)	0.015(244)	0.09(1,465)	0.17(2,730)
Suction Pressure	MP_a(psia)	12.5(1,815)	12.5(1,815)	12.5(1,815)
Suction Temperature	°C (°F)	310(590)	310(590)	310(590)
Head	m (ft)	518(1,700)	565(1,855)	605(1,985)
Power (shaft), each	kWe (hp)	76(101.6)	496(665)	989(1,326)
Motor Size	kWe (hp)	93(125)	522(700)	1,119(1,500)

APPENDIX D (Continued)

Table D-1. CHARGING HEATER DRAIN PUMP DESIGN DATA
WATER/STEAM RECEIVER (POWER) (Continued)

Applicable 1st Stage Storage Concept
Containerized Salt (Latent)

		Storage Time - Hours		
		1	6	15
Quantity		2-50%	2-50%	2-50%
Type		Barrel	Barrel	Barrel
Material		Carbon Steel with Alloy Steel Trim		
Fluid		Condensate	Condensate	Condensate
Flow (Total)	kg/s (lb/hr)	23(181,700)	137(1,090,000)	256(2,030,000)
Capacity, each	m^3/s (gpm)	0.018(281)	0.11(1,683)	0.2(3,136)
Suction Pressure	MP_a(psia)	12.5(1,815)	12.5(1,815)	12.5(1815)
Suction Temperature	°C (°F)	328(622)	328(622)	328(622)
Head	m (ft)	518(1,700)	565(1,855)	605(1,985)
Power (shaft), each	kWe (hp)	77(103.6)	507(680)	1,012(1,350)
Motor Size	kWe (hp)	93(125)	522(700)	1,119(1,500)

Applicable 1st Stage Storage Concepts
Direct Contact HX (Latent)

		Storage Time - Hours		
		1	6	15
Quantity		1-100%	4-25%	4-25%
Type		Barrel	Barrel	Barrel
Material		Carbon Steel with Alloy Steel Trim		
Fluid		Condensate	Condensate	Condensate
Flow (Total)	kg/s (lb/hr)	21.6(171,170)	129(1,027,000)	241(1,914,000)
Capacity, each	m^3/s (gpm)	0.03(488)	0.046(733)	0.12(1,832)
Suction Pressure	MP_a(psia)	12.5(1,815)	12.5(1,815)	12.5(1,815)
Suction Temperature	°C (°F)	310(590)	310(590)	310(590)
Head	m (ft)	518(1,700)	565(1,855)	605(1,985)
Power (shaft), each	kWe (hp)	162(196)	265.2(320)	477(640)
Motor Size	kWe (hp)	187(250)	261(350)	560(750)

NOTE:
1. Pressurized water (underground & above ground) storage system feedwater pumps included on Thermal Storage Design Data sheets.

2. Charging heater drain pumps for Modified Tube Intensive HX (C&W-CE) included on Thermal Storage Design Data sheet.

APPENDIX D (Concluded)

Table D-2. CHARGING HEATER DRAIN PUMP DESIGN DATA
WATER/STEAM RECEIVER (PROCESS HEAT)

Applicable Storage Concepts
Caloria/Granite Thermocline (Reference)
Caloria/Granite Thermocline (Concrete Pit)
Caloria (2-Tank)

		Storage Time - Hours		
		1	6	15
Quantity		2-50%	2-50%	2-50%
Type		Barrel	Barrel	Barrel
Material		Carbon Steel with Alloy Steel Trim		
Fluid		Condensate	Condensate	Condensate
Flow (Total)	kg/s (lb/hr)	32(257,233)	194(1,543,400)	363(2,876,000)
Capacity, each	m^3/s (gpm)	0.023(362)	0.14(2,170)	0.26(4,047)
Suction Pressure	MP_a(psia)	12.5(1,815)	12.5(1,815)	12.5(1,815)
Suction Temperature	°C (°F)	304(580)	304(580)	304(580)
Head	m (ft)	518(1,700)	565(1,855)	605(1,985)
Power (shaft), each	kWe (hp)	118(158)	792(1,061)	1,535(2,058)
Motor Size	kWe (hp)	149(200)	933(1,250)	1865(2,500)

Applicable Storage Concept
Containerized Salt (Latent)

		Storage Time - Hours		
		1	6	15
Quantity		2-50%	2-50%	2-50%
Type		Barrel	Barrel	Barrel
Material		Carbon Steel with Alloy Steel Trim		
Fluid		Condensate	Condensate	Condensate
Flow (Total)	kg/s (lb/hr)	36.4(289,000)	218.6(1,735,000)	407.4(3,233,000)
Capacity, each	m^3/s (gpm)	0.028(451)	0.17(2,704)	0.32(5,039)
Suction Pressure	MP_a(psia)	12.5(1,815)	12.5(1,815)	12.5(1,815)
Suction Temperature	°C (°F)	328(622)	328(622)	328(622)
Head	m (ft)	518(1,700)	565(1,855)	605(1,985)
Power (shaft), each	kWe (hp)	140(188)	916(1,228)	1,827(2,449)
Motor Size	kWe (hp)	149(200)	933(1,250)	1,865(2,500)

NOTE:

1. Underground pressurized water storage system feedwater pumps included on Thermal Storage Design Data sheets.

2. Charging heater drain pumps for Modified Tube Intensive HX (C&W-CE) included on Thermal Storage Design Data sheet.

Document Control Page	1. SERI Report No. SERI/TR-631-1283	2. NTIS Accession No	3. Recipient's Accession No.

4. Title and Subtitle

Cost and Performance of Thermal Storage Concepts in Solar Thermal Systems
Phase 1: Water/Steam, Organic Fluid and Closed Air Brayton Receivers

5. Publication Date: November 1983

6.

7. Author(s) L. J. Dubberly, J. E. Gormely, W. R. Lang, D. J. Liffengren, A. W. McKenzie, R. M. Porter

8. Performing Organization Rept. No.

9. Performing Organization Name and Address
Stearns-Roger Services Inc.
4500 Cherry Creek Drive
P.O. Box 5888
Denver, Colorado 80217

10. Project/Task/Work Unit No.

11. Contract (C) or Grant (G) No.
(C) XP-0-9000-1
(G)

12. Sponsoring Organization Name and Address
Solar Energy Research Institute
1617 Cole Boulevard
Golden, Colorado 80401

13. Type of Report & Period Covered: Technical Report

14.

15. Supplementary Notes

16. Abstract (Limit: 200 words)

Cost and performance of various thermal storage concepts in various solar thermal systems are presented in this report. The solar thermal systems studied include the following:

- Water/steam receiver for a 100 MWe reheat power plant
- Organic Fluid Receiver for a 400 kWe Total Energy System
- 150 MWe Closed Air Brayton Cycle
- Process Heat Applications Using Water/Steam and Organic Fluid Receiver

Concept screening data, conceptual design data and concept costs are presented for storage capacities ranging from 1 to 15 hours for each of the thermal storage concepts studied.

17. Document Analysis

a. Descriptors

Thermal Storage; Sensible Heat Storage; Latent Heat Storage; Solar Thermal Systems

b. Identifiers/Open-Ended Terms

Receiver Types: Water/Steam, Organic Fluid, Gas Cooled

c. UC Categories

62

18. Availability Statement
National Technical Information Service
U.S. Department of Commerce
5285 Port Royal Road
Springfield, Virginia 22161

19. No. of Pages: 297

20. Price: A13

Form No. 3200-13 (4-79)