Copyright © 2002 by Humana Press Inc.
All rights of any nature whatsoever reserved.
0273-2289/02/98-100/0899/$12.25

Performance of Immobilized *Zymomonas mobilis* 31821 (pZB5) on Actual Hydrolysates Produced by Arkenol Technology

Tomiaki Yamada,*[,1] Michael A. Fatigati,[2] and Min Zhang[3]

[1]*JGC, Bio-Refinery Group,*
New Business Development Operations,
No. 2 Project Division, 2-3-1,
Minato Mirai, Nishi-ku, Yokohama, 220-6001, Japan,
E-mail: yamada.tomiaki.a@jgc.co.jp;
[2]*Arkenol, Mission Viejo, CA; and*
[3]*National Renewable Energy Laboratory,*
Golden, CO

Abstract

By applying the Arkenol process using highly concentrated sulfuric acid, various biomass feedstocks, including cedar tree, rice straw, newspaper, and bagasse, were successfully processed and converted into glucose and xylose for fermentation usage in a flash fermentation reactor in which the performance of National Renewable Energy Laboratory's patented rec-*Zymomonas mobilis* 31821 (pZB5) after immobilization was investigated. The immobilization medium is a photocrosslinked resin made from polyethylene glycols or polypropylene glycols. Recombinant or rec-*Z. mobilis* used in the study has been shown to efficiently ferment glucose and xylose at a relatively high concentration (12–15%), that is a typical hydrolysate produced from cellulosic feedstocks. The application of immobilized rec-*Z. mobilis* and flash fermentation technology, together with concentrated acid technology producing a high concentration sugar solution, promises to speed the development of the cellulose-to-ethanol industry.

Introduction

Research and development (R & D) in Japan for value-added products to be obtained from biomass conversion, namely, the development of a

*Author to whom all correspondence and reprint requests should be addressed.

technology for producing fuel ethanol from lignocellulosic materials, had been positively promoted with the support of the Japanese government until 1990. In the past 10 yr, however, little progress has been made in the technological development of biomass conversion, because of factors such as the lower oil price range.

By contrast, the U.S. and European countries have continued their persistent efforts directed at the development of such technologies, and impressive results have been obtained such as pretreatment and hydrolysis technology for lignocellulosic materials, and the development of an ethanol fermentation microorganism for C5 monosaccharide, such as xylose and arabinose, in a saccharified solution, which has long been considered difficult.

In the course of such R & D programs, the use of a saccharified solution obtained by the biomass hydrolysis method applying highly concentrated sulfuric acid, which is a typical biomass conversion technology developed by Arkenol in the United States *(1,2)*, the feasibility of the high-efficiency ethanol flash fermentation process was studied by applying the microorganism immobilization method developed by Yamada et al. *(3,4)* to rec-*Zymononas mobilis* 31821 (pZB5) produced by maximally utilizing recombinant gene technology at the National Renewable Energy Laboratory (NREL) *(5–7)*.

Materials and Methods

In this R & D program, building scrap wood (e.g., Japanese cedar), rice straw, and wastepaper (e.g., old newspapers), the most readily available biomass resources in Japan, were adopted as lignocellulosic materials for fuel ethanol production.

As a pretreatment technology for biomass materials, the high-concentration sulfuric acid hydrolysis method developed by Arkenol, shown in Fig. 1, was adopted.

Culture of rec-Z. mobilis 31821 (pZB5)

Using *Z. mobilis* obtained from NREL, a colony was selected by the conventional method applying agar media. The colony was planted in liquid media consisting of 20 g/L of glucose, 10 g/L of yeast extract, 2 g/L of KH_2PO_4, 20 mg/L of tetracycline and cultured in a 5-L incubator at 30°C for 48 h. After culture, the liquid was concentrated by a centrifugal separator and diluted by 20 parts to 1 with pure water to form a cell suspension for immobilization of the microorganism.

Preparation of Immobilized Microorganism

In selecting an immobilization substrate, it is required that the substrate display satisfactory water dispersion characteristics in the microorganism solution and have sufficient mechanical strength to ensure practical use over a long period of time. We studied the applicability of

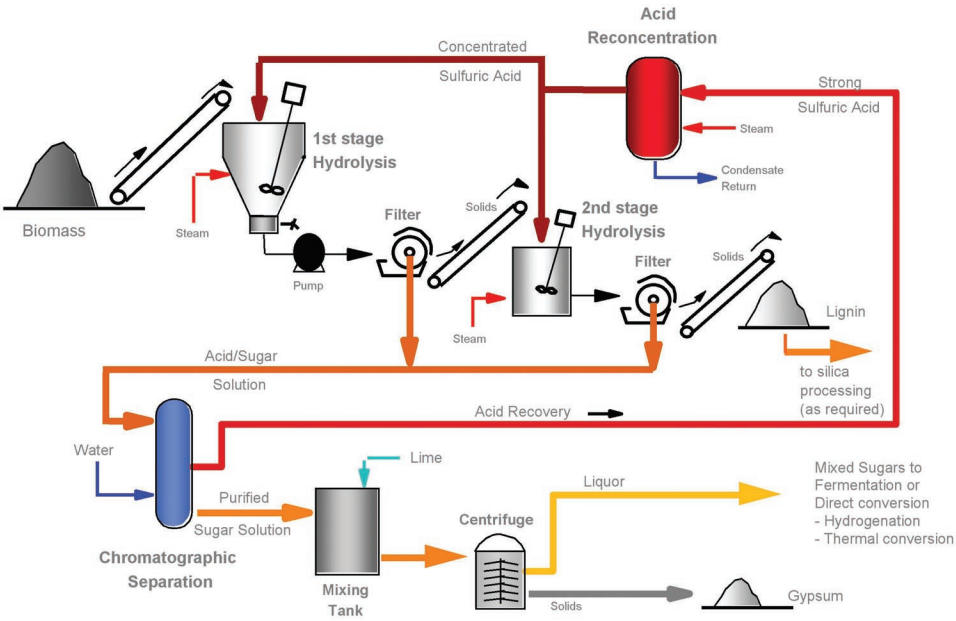

Fig. 1. Conversion of cellulose/hemicellulose to mixed sugars using Arkenol's concentrated acid hydrolysis.

various kinds of immobilization substrates to yeast and bacteria and clarified that the polyethylene glycol type of photocrosslinked resin is best suited for this system of reaction *(3,4)*. Immobilized *Z. mobilis* was therefore prepared as follows: 10 parts photocrosslinked resin (ENT-3800), 0.03 parts photoolymerization initiator, 4 parts sodium alginate (as 15 g/L solution), 2 parts *Zymomonas* solution.

In this R & D program, approx 2000 mL of beads of approx 2.5 mm in diameter was prepared using the simplified light irradiation device.

The cell concentration of *Z. mobilis* in the initial stage of immobilization was 1.83×10^{-4} g/mL of beads (2.70×10^{4} cells/mL of beads in terms of cell quantity). Additionally, with a view to comparing the fermentation characteristics between rec-*Z. mobilis* and the yeast *Saccharomyces cerevisiae* 396, which is excellent in the fermentation characteristics of C6 such as glucose, was immobilized in the same manner.

Experimental Apparatus

A process flow sheet of the fermentation system used in this research is shown in Fig. 2. The main fermentor has a capacity of 5 L and is designed to allow batch continuous, and continuous flash fermentation. Taking continuous flash fermentation as an example here, the operation procedure is outlined next.

The saccharified solution as a main feed, as well as a small quantity of the yeast extract and KH_2PO_4 as an auxiliary feed, are continuously fed to

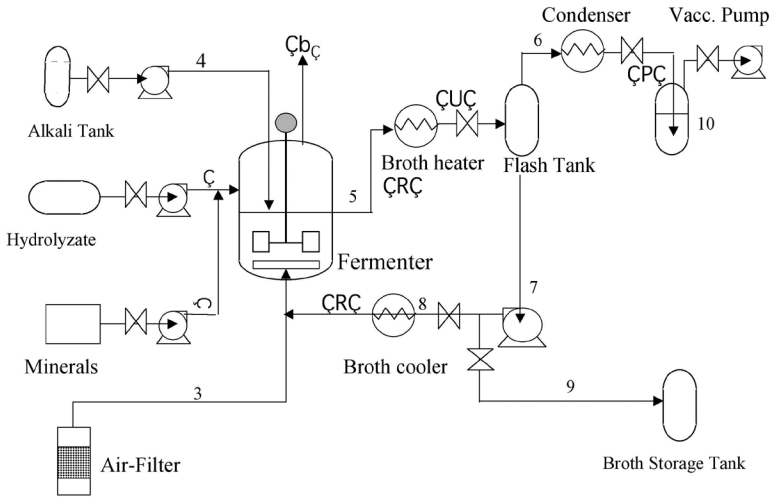

Fig. 2. Process flow sheet for continuous flash fermentation.

the fermentor charged with immobilized *Z. mobilis* and hot water and 1 *N* NaOH solution maintained at 30°C and pH 4.5–5.5.

In the case of flash fermentation, part of the fermentation liquid in the fermentor is extracted, heated to about 50°C by a broth heater (E-501), then introduced into the flash tank, which is kept at approx 13,300 Pa, where the liquid is separated into vapor containing ethanol in quantities and broth. The vapor containing a high concentration of ethanol is cooled and recovered as ethanol condensate, and the broth liquid is returned to the fermentor, whereby continuous flash fermentation is ensured.

For the purpose of comparing the fermentation characteristics of rec-*Z. mobilis* and *S. cerevisiae* 396, a flask basis experiment (300 mL flask with a shaking bath) was carried out.

Results

As a general rule, when immobilized microorganisms are applied to a fermentation system, preculture of about 100 h is usually required. This fermentation system also has a basically similar requirement.

Figure 3 is a series of micrographs of the cells inside the beads as immobilized *Z. mobilis* is cultivated. The micrographs clearly reveal that virtually no cells are observed on the surfaces of the beads immediately after immobilization (micrographs on the left). However, colonies of "*Z. mobilis*" have formed on the surfaces about 3 d after cultivation (micrographs in the middle), and it is seen from cross-sectional micrographs that the thickness of the colonies is approx 200 µm.

By contrast the surfaces are completely covered with the colonies 1000 h after cultivation (micrographs on the right). In this case, the cross-sectional micrographs show that the colony depth from the surface is only

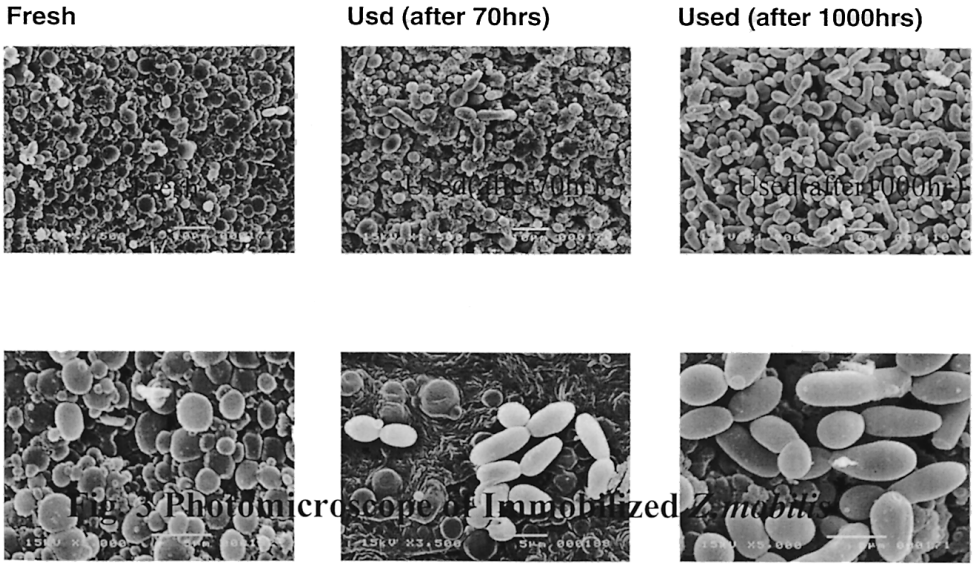

Fig. 3. Photomicroscope of immobilized *Z. mobilis* in beads.

200 μm; thus, only the bead surfaces are effective for rec-*Z. mobilis*, in contrast with immobilized yeast.

Figure 4 shows a fermentation result difference between immobilized *Z. mobilis* and immobilized yeast, in which a dilute acid hydrolysate (41.2 g/L of glucose and 11.2 g/L of xylose) was obtained from Japanese cedar utilizing a 300 mL flask-shaking fermentor . Consequently, it is seen that C6 sugar fermentability is the same in both yeast and rec-Z mobilis. However, C5 sugar is fermented by rec-*Z. mobilis*, different from yeast.

Figure 5 shows a fermentation result obtained using a mixture of hydrolysate from rice straw and a synthetic medium (14.5 wt% glucose and 4.60 wt% xylose, in total) in a 5-L jar-fermentor with an average fermentation time of 7 to 8 h at 30°C. The line with the asterisks in Fig. 5 shows the uptake rate of glucose in a suspended-state rec-*Z. mobilis*; accordingly, the fermentation rate of immobilized rec-*Z. mobilis* in the initial stage is revealed to be several times faster than the suspended state. As shown in Fig. 5, approx 10 h of glucose fermentation is required as an average time, with 20 h required for xylose, in the continuous fermentation; it is thereby confirmed that C5 fermentability is inferior to that of C6. In the continuous flash fermentation after continuous fermentation, ethanol concentration of the flash condensate is in excess of 300 g/L, and that in the fermentor is reduced from 65 to 50 g/L.

Discussion

Two ethanol fermentation studies utilizing immobilized *Z. mobilis* have previously been conducted: one utilizing a photocrosslinked resin as

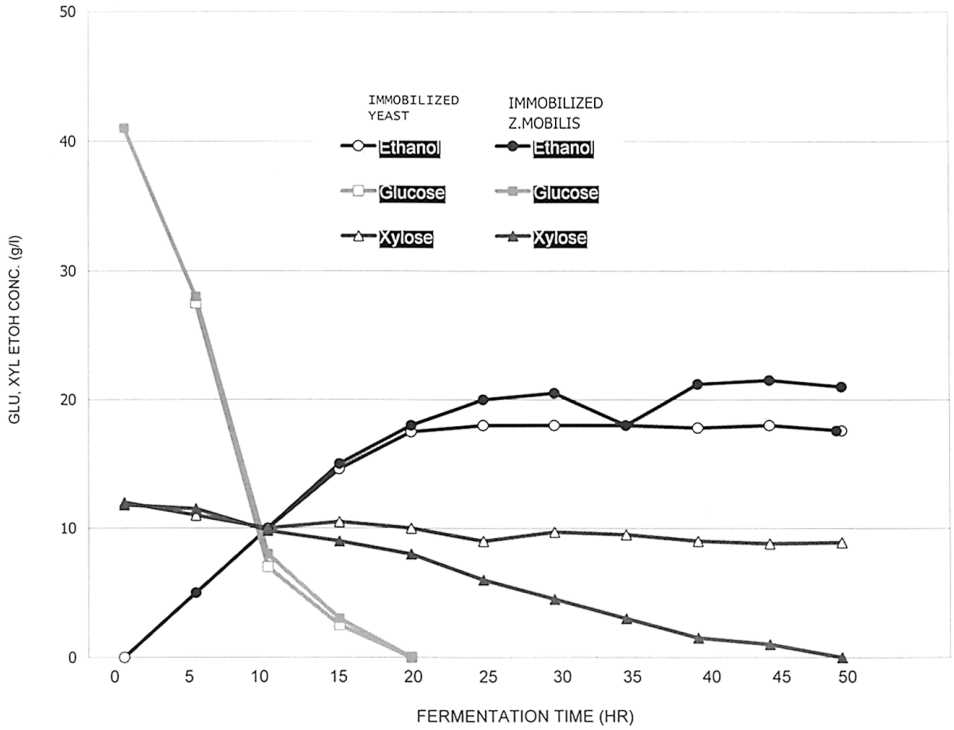

Fig. 4. Comparison between immobilized yeast and *Z. mobilis* using acid hydrolysate from Japanese cedar. Initial GLU: 41.2 g/L; XYL: 12.2 g/L; pH 4.5–5.5; 30°C.

carrier and molasses as feedstock, by Iida et al *(8,9)*, and one utilizing κ-carrageenan and xylose-contained synthetic medium, by Krishnan et al. *(10)*.

As shown in Fig. 4, in hydrolysate fermentation utilizing conventional yeast, C5 sugars such as xylose were not fermented. However, rec-*Z. mobilis* developed by NREL enables C5 sugars to be fermented; that is, it is proved that a higher ethanol yield has been obtained when utilizing biomass, such as wood, or rice straw, enabling a higher rate of C5 sugar extraction. On the other hand, when considering the commercial application of rec-*Z. mobilis*, further fermentability improvement is desired.

Furthermore, the repeat-batch test results of immobilized rec-*Z. mobilis* by a 300-mL flask for 1 mo show that fermentability from xylose to ethanol is stable; this means that genes in rec-*Z. mobilis* are successfully and smoothly transmitted to the next generation.

However, as shown in Figs. 4 and 5, the C5 fermentability using rec-*Z. mobilis* is sufficient for commercial application. As such, improvement of fermentability by rec-*Z. mobilis* is desired.

The reaction rate equation in ethanol fermentation using a suspension of microorganisms is given as follows by Aiba and Shoda *(11)*:

$$dP/dt = vSX/(1 + P/Kp)(Ks + S) \quad (1)$$

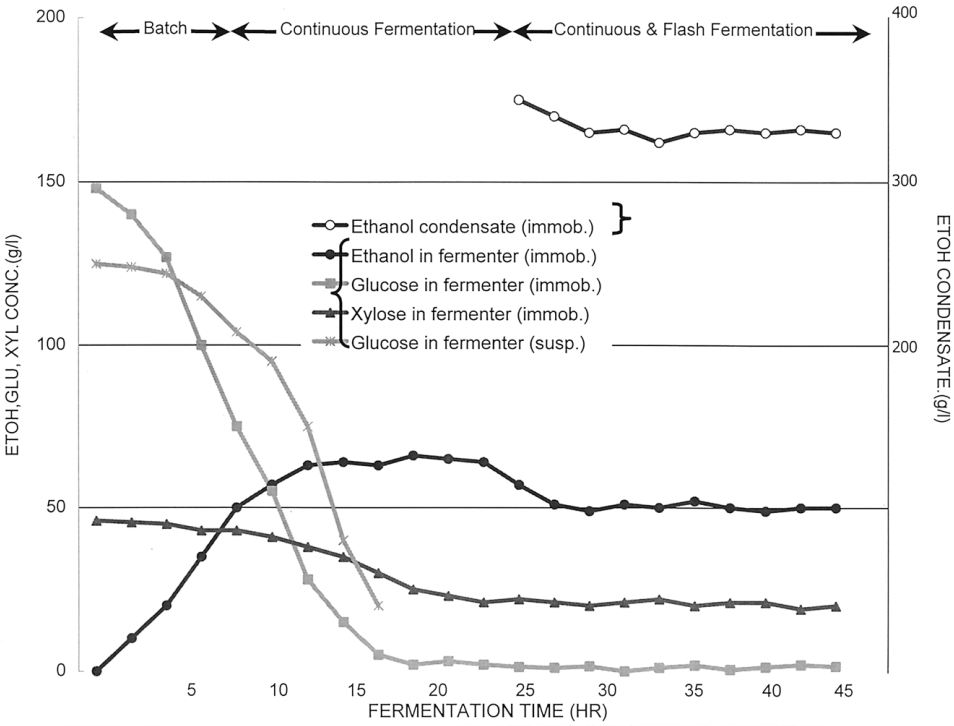

Fig. 5. Fermentation performance of immobilized *Z. mobilis* 31821 (PZB5) using acid hydrolysate from rice straw with synthetic medium. Glucose from a suspended fermentation is shown for comparison. Average residence time: 7 to 8 h; pH: 4.5–5.5; 30°C.

in which P is the ethanol concentration, t is the time (h), v is the specific rate at $P = 0$ (h^{-1}), S is the sugar concentration (g/L), K_p is the empirical constant (g/L), Ks is the saturation constant (g/L), X is the cell concentration (g/L).

In general, K_s S. Thus Eq. 1 approximates to:

$$dP = /dt = vX/(1 + P/K_p) \tag{2}$$

In other words, the fermentor productivity, dP/dt, is proportional to the cell concentration, X, in the fermentor and is inversely proportional to the ethanol concentration in a high-concentration ethanol solution. Therefore, an aim of this R&D project is to ensure high-efficiency fermentation by the combined effects of adopting the immobilization method, which allows the fermentor cell concentration to be kept at a higher level than that in an ordinary suspension culture, and removing fermentation-metabolic ethanol from the fermentation system by the flash method in order to keep the fermentor ethanol concentration low.

As a result of the experiment, it is verified that the fermentor cell concentration can be kept approximately several times higher than that in the ordinary suspension batch fermentation system. According to Eq. (2), it is therefore expected that fermentor productivity can also be raised by

approximately several times, but this is only twice or so higher than that of the conventional fermentation system. It is understood that this is owing to the difference in relative activity between immobilized cells and suspended cells. As shown in Fig. 5, however, the immobilized cell fermentation method ensures a higher fermentation rate than the initial fermentation rate in the suspended cell fermentation method. This means that the immobilized cell fermentation method can maintain a higher cell concentration than the initial cell concentration in the suspended cell fermentation method.

Furthermore, the immobilized microorganism method contributes to a higher ethanol productivity; therefore, a compact fermentor rather than a suspended-type fermentor can be applied. However, the cost impact of microorganism immobilization has to be considered from the viewpoint of industrial economics.

As mentioned earlier, a longer life of rec-*Z. mobilis* can be expected. Further, it is confirmed that the life of photocrosslinkable resin, to be used for microorganism immobilization, lasts for 2 to 3 yr; thus, microorganism immobilization is a promising method for economical ethanol production from biomass hydrolysates.

Concerning the removal of ethanol as an inhibitor, no remarkable effect was observed because, in general, the sugar concentrations of saccharified solutions made from cellulosic biomass were in the range of 12–15 wt%, and lower than the 20–25 wt% adopted in waste molasses fermentation, which results in relatively slight ethanol inhibition.

However, if biomass pretreatment technology producing a higher-concentration saccharified solution is developed in the future, it is expected that the process will provide a useful fermentation system in combination with the microorganism immobilization technology.

Acknowledgments

We express sincere gratitude Dr. Finkelstein of NREL, who made possible the utilization of rec-*Z. mobilis* 31821 (pZB5) for the execution of this program, as well as to Kansai Paint, which offered an immobilizing agent and extended cooperation in taking electron micrographs of *Z. mobilis*. Part of this research and development program was jointly executed by Arkenol and JGC, supported by an international joint research fund granted by the New Energy and Industrial Technology Development Organization.

References

1. Farone, W. A. and Cuzens, J.E. (1998), US patent no. 5,726,046.
2. Farone, W. A. and Cuzens, J. E. (1997), US patent no. 5,620,877.
3. Yamada, T., Yoshii, H., Yagi, Y., Iida, T., and Chiba, H. (1982), *Pan-Pacific Synfuels Conference*, vol. 455.
4. Yamada, T. (1983), *J. Synthetic Organic Chem.*, 1098.

5. Picataggio, S. K., Zhang, M., Eddy, C. K., Deanda, K. A., Finkelstein, M., Mohagheghi, A., Newman, M. M., and McMillan, J. D. (1998), US patent no. 5,712,133.
6. Picataggio, S. K., Zhang, M., Eddy, C. K., and Deanda, K. A. (1998), US patent no. 5,726,053.
7. Zhang, M., Cheu, Y.-C., Picataggio, S. K., and Finkelstein, M. (1998), US patent no. 5,843,760.
8. Iida, T., Sakamoto, M., Izumida, H., and Akagi, Y. (1993), *J. Ferment. Bioeng.* **75,** 28.
9. Iida, T., Izumida, H., Akagi, Y., and Sakamoto, M. (1993), *J. Ferment. Bioeng.* **75,** 32.
10. Krishnan, M. S., Blanco, M., Shattuck, C. K., Nghiem, N. P., and Davison, B. H. (2000), *Appl. Biochem Biotechnol.* **84–86,** 525–541.
11. Aiba, S. and Shoda, M. (1969), *J. Ferment.Technol.* **47,** 790.

32436

Permission to Use Copyrighted Material

☐ Yes I give the National Renewable Energy Laboratory (NREL) of Golden, Colorado, irrevocable permission to post the following onto its site on the World Wide Web

☐ No

Name of Document, Report, Article, etc.: Performance of Immobilized *Zymomonas mobilis* 31821(pZB5) on Actual Hydrolyzates Produced by Arkenol Technology. Yamada et al. p. 899 of *23rd Symposium on Biotechnology for Fuels and Chemicals, Breckenridge, Colorado,* May 2001.

☐ Yes In addition to posting on the Web, I give NREL permission to distribute hard copies of the document through its National Alternative Fuels Hotline in response to requests.

☐ No

When posting on the Web, NREL will credit the copyright holder thus: "Posted on this site with permission from Humana Press." When distributing hard copies, NREL will label the document "Reprinted with permission from Humana Press.

I deny permission to post the document on the Web or to distribute hard copies, but give permission for the document to be abstracted and cited in NREL's database, along with information about obtaining the document directly from the copyright holder. The document can be obtained by writing:

I represent and warrant that I have the full right and authority to grant the rights herein granted and that no one else's permission is required.

Printed name: Thomas B Lange

Signed name

Title and company

Date: 4/3/02

Created February 1997