Impact of Increased Inverter Penetration on Power System Small-Signal Stability

Preprint

Yashen Lin,[1] Gab-Su Seo,[1] Sanjana Vijayshankar,[2] Brian Johnson,[3] and Sairaj Dhople[2]

1 National Renewable Energy Laboratory
2 University of Minnesota
3 University of Washington

Presented at the 2021 IEEE Power and Energy Society General Meeting
July 25–29, 2021

NREL is a national laboratory of the U.S. Department of Energy
Office of Energy Efficiency & Renewable Energy
Operated by the Alliance for Sustainable Energy, LLC

This report is available at no cost from the National Renewable Energy Laboratory (NREL) at www.nrel.gov/publications.

Contract No. DE-AC36-08GO28308

Conference Paper
NREL/CP-5D00-78448
July 2021

Impact of Increased Inverter Penetration on Power System Small-Signal Stability

Preprint

Yashen Lin,[1] Gab-Su Seo,[1] Sanjana Vijayshankar,[2] Brian Johnson,[3] and Sairaj Dhople[2]

1 National Renewable Energy Laboratory
2 University of Minnesota
3 University of Washington

Suggested Citation
Lin, Yashen, Gab-Su Seo, Sanjana Vijayshankar, Brian Johnson, and Sairaj Dhople. 2021. *Impact of Increased Inverter Penetration on Power System Small-Signal Stability: Preprint*. Golden, CO: National Renewable Energy Laboratory. NREL/CP-5D00-78448. https://www.nrel.gov/docs/fy21osti/78448.pdf.

NREL is a national laboratory of the U.S. Department of Energy
Office of Energy Efficiency & Renewable Energy
Operated by the Alliance for Sustainable Energy, LLC

This report is available at no cost from the National Renewable Energy Laboratory (NREL) at www.nrel.gov/publications.

Contract No. DE-AC36-08GO28308

Conference Paper
NREL/CP-5D00-78448
July 2021

National Renewable Energy Laboratory
15013 Denver West Parkway
Golden, CO 80401
303-275-3000 • www.nrel.gov

NOTICE

This work was authored in part by the National Renewable Energy Laboratory, operated by Alliance for Sustainable Energy, LLC, for the U.S. Department of Energy (DOE) under Contract No. DE-AC36-08GO28308. Funding provided by U.S. Department of Energy Office of Energy Efficiency and Renewable Energy Solar Energy Technologies Office. The views expressed herein do not necessarily represent the views of the DOE or the U.S. Government.

This report is available at no cost from the National Renewable Energy Laboratory (NREL) at www.nrel.gov/publications.

U.S. Department of Energy (DOE) reports produced after 1991 and a growing number of pre-1991 documents are available free via www.OSTI.gov.

Cover Photos by Dennis Schroeder: (clockwise, left to right) NREL 51934, NREL 45897, NREL 42160, NREL 45891, NREL 48097, NREL 46526.

NREL prints on paper that contains recycled content.

Impact of Increased Inverter-based Resources on Power System Small-signal Stability

Yashen Lin*, Gab-Su Seo*, Sanjana Vijayshankar†, Brian Johnson‡, and Sairaj Dhople†
*Power Systems Engineering Center, National Renewable Energy Laboratory, Golden, CO 80401, USA
†University of Minnesota, Minneapolis, MN, USA
‡University of Washington, Seattle, WA, USA
e-mails: yashen.lin@nrel.gov, gabsu.seo@nrel.gov, vijay092@umn.edu, brianbj@uw.edu, sdhople@umn.edu

***Abstract*—The transformation of the power system to include more distributed energy resources (DER) implies an increase in the number of inverter-based resources deployed on the grid. Envisioning future scenarios, this paper presents a small-signal stability analysis for a power grid comprising synchronous generators and inverter-based resources. Three types of inverter control are considered: grid following, droop-controlled grid forming, and virtual oscillator control grid forming. Although small-signal stability of power systems is a widely studied topic, systematic analysis of mixed machine-inverter systems with detailed control models at various inverter levels are limited. This paper addresses the gap with numerical simulations tailored to the IEEE 39-bus system. Results show the system may become unstable at high inverter level of grid-following inverters, and grid-forming inverter control can potentially improve system stability, thereby enabling very high level of DERs.**

***Index Terms*—Grid-following inverter, grid-forming inverter, inverter-based resources, modal analysis, power system stability, small-signal stability.**

I. Introduction

As the power system transforms to the next generation, more distributed energy resources (DERs) are integrated into the system. Most of these DERs are connected to the system via power electronics inverters, which have fundamentally different control- and physical-layer characteristics compared to synchronous generators [1]. In light of this anticipated evolution of the grid, stability analysis of mixed machine-inverter systems is critical to guarantee robust operation of future power systems under different operating scenarios [2].

Small-signal stability tailored to traditional power system dynamic models is a classical topic [3], but there has been recent interest in analyzing the stability of power systems with a combination of synchronous generators and a mix of inverters with different control methods (broadly classifiable as grid-following and grid-forming). In [4] and [5], the authors investigated the small-signal stability of a single-machine single-inverter system, with grid-following inverter control and grid-forming inverter control, respectively. In [6], two different types of grid-forming inverters were studied using a two-source microgrid. In [7], the authors compared the stability of grid-following inverter and grid-forming inverter; a two-source system was also used for demonstration. From an algorithm standpoint, there are several methods outlined on application-specific fast computation tools for stability analysis of large, sparse power system networks [8], [9].

Although these studies provide insights on the stability of mixed machine-inverter systems, most of them focus on small systems and simple models. A systematic analysis of large mixed machine-inverter system with various inverter controls and different inverter levels is still lacking. This paper aims to address this gap by providing a modeling framework to study such systems. We present detailed models for traditional synchronous generator and inverter-based resources, and analyze the small-signal stability of a modified IEEE 39-bus system with 10 generator buses (see Fig. 1). Both grid-following and grid-forming inverter controls are considered. Within the latter, we also consider two different types: the droop-control method

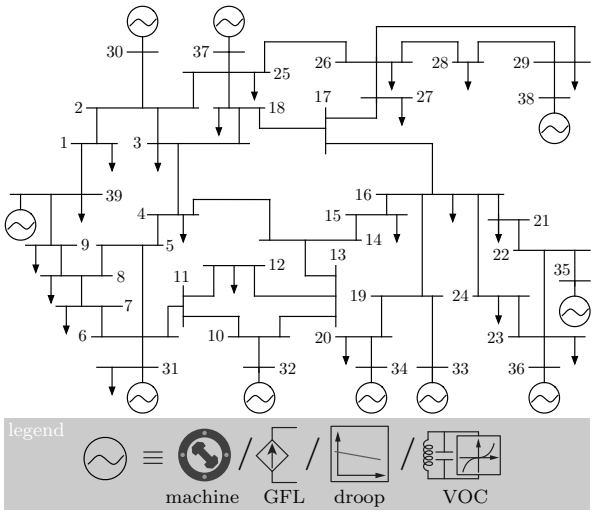

Fig. 1: An exhaustive small-signal stability assessment is presented for the IEEE 39-bus test-case system where generator buses are modeled as: conventional synchronous machines, grid-following inverters, and two types of grid-forming inverters (droop control and virtual oscillator control).

This work was authored in part by the National Renewable Energy Laboratory, operated by Alliance for Sustainable Energy, LLC, for the U.S. Department of Energy (DOE) under Contract No. DE-AC36-08GO28308. Funding provided by U.S. Department of Energy Office of Energy Efficiency and Renewable Energy Solar Energy Technologies Office. The views expressed in the article do not necessarily represent the views of the DOE or the U.S. Government. The U.S. Government retains and the publisher, by accepting the article for publication, acknowledges that the U.S. Government retains a nonexclusive, paid-up, irrevocable, worldwide license to publish or reproduce the published form of this work, or allow others to do so, for U.S. Government purposes. Support from the National Science Foundation through grants 1453921 and 1509277 is also gratefully acknowledged.

and the virtual oscillator control (VOC) method. Different inverter levels are also investigated by gradually replacing the synchronous generators with inverter-based resources.

Recent literature related to our effort includes [10], where the authors develop a stability theory for a class of partitioned linear systems with symmetries and apply it to study the stability properties of inverters. A stability framework for synchronous generators was developed in [11]. Compared to these works, our paper considers a mixed machine-inverter test case to study the impact of increased inverter integration. An exhaustive study of the effect of different inverter levels on stability is provided in [12]. Our findings in this paper are comparable to those of [12] but, in addition to the effect of different inverter integration levels, we also exhaustively investigate if various configurations (generators and inverters at different buses in Fig. 1) of the overall system are small-signal stable.

The main contributions of this paper are: i) a systematic approach is presented to analyze small signal-stability of large mixed machine-inverter systems with both grid-following and grid-forming inverter control; ii) a modified IEEE 39-bus system is analyzed to demonstrate the stability impact of inverter-based resources at different integration levels; iii) a sensitivity analysis is performed to identify the components and parameters that have significant impact on system stability.

II. Dynamical Models for Synchronous Generators and Inverter-Based Resources

In this section, we describe the dynamical model of the system, including the synchronous machines, the inverter-based resources, and the network. Due to space limits, only key elements are presented in each case. Interested readers are referred to the following for technical modeling details: i) synchronous generators: [3], [13]; ii) grid-following inverters: [14], [15]; iii) droop-controlled grid-forming inverters [16]; iv) VOC grid-forming inverters [17]. The dynamical models for the generators and inverters discussed subsequently are all expressed in the general form

$$\dot{x} = f(x, u, z) \tag{1}$$

where x are the states, u are the external inputs, and z are the interface (algebraic) variables that establish the interconnection between the generators, inverters, and the network.

A. Synchronous Machine Model

The synchronous generator dynamical model includes machine dynamics, the automatic voltage regulator (AVR), the speed governor, and the power system stabilizer (PSS). A two-axis model is adopted for the machine dynamics. The AVR provides the function to control the terminal voltage of the synchronous generator. The speed governor modulates the generator output to regulate the frequency, and enables multiple generators to share loads. The PSS adds an additional feedback loop to improve the system stability. In the state-space model, there are four states for the machine dynamics, four states for the AVR, one state for the speed governor, and three states for the PSS. Interface variables are the generator output currents, while external inputs to the model are the terminal-voltage and mechanical-torque reference values.

B. Inverter model

We consider three types of inverters: grid-following, droop-controlled grid-forming, and VOC grid-forming. The structure of the inverters are outlined in Fig. 2. The physical components of all three types are the output LC filter and the voltage source inverter. In all three cases, an average model is adopted where the switching dynamics are neglected and the terminal voltage coincides with the command generated by the current controller or grid-forming controller output [15]. The control loops differ in the three cases; they are discussed in the following subsections.

1) Grid-following: The architecture of the grid-following inverter is illustrated in Fig. 2 (a). The control system includes a phase-locked loop (PLL), a power controller, and a current controller. The PLL synchronizes the inverter voltage to the grid; the power controller generates the current reference for the current controller; and the current controller generates the PWM modulation signals that yield the desired terminal voltage. The PLL and other controllers are standard PI. The state-space model adopted for the grid-following inverter includes three states corresponding to the PLL, four states for the power controller, two states for the current controller, and four states for the LC filter. External inputs to the model are real- and reactive-power setpoints. Interface variables are the inverter output currents.

2) Droop-controlled Grid-forming Inverter: The architecture of the droop-controlled grid-forming inverter is shown in Fig. 2 (b). The system includes a module for computing real and reactive power from measurements, low-pass filters that filter the power computations, and controllers to implement the droop laws that yield the voltage and angle which are eventually realized at the switched terminals of the inverter. The state-space model includes dynamic states for the voltage angle, filtered real power, filtered reactive power, and four additional states that correspond to the LC filter (as with the grid-following inverter). External references are real- and reactive-power setpoints; and interface variables that interconnect the inverter with the network are the output currents.

3) VOC Grid-forming Inverter: The architecture of the VOC grid-forming inverter is illustrated in Fig. 2 (c). The controller measures the output current and utilizes it as the input to the nonlinear oscillator that is at the core of the controller. Dynamic states from the oscillator are then leveraged to realize the inverter terminal voltage. While several oscillator types have been investigated in the literature for VOC, the particular architecture leveraged in this work corresponds to so-called dispatchable VOC. Dynamic states in this case include phase angle and voltage magnitude (which are derived from the nonlinear oscillator) and four states corresponding to the output LC filter. As before, real- and reactive-power setpoints serve as inputs, while interface variables are the inverter output currents.

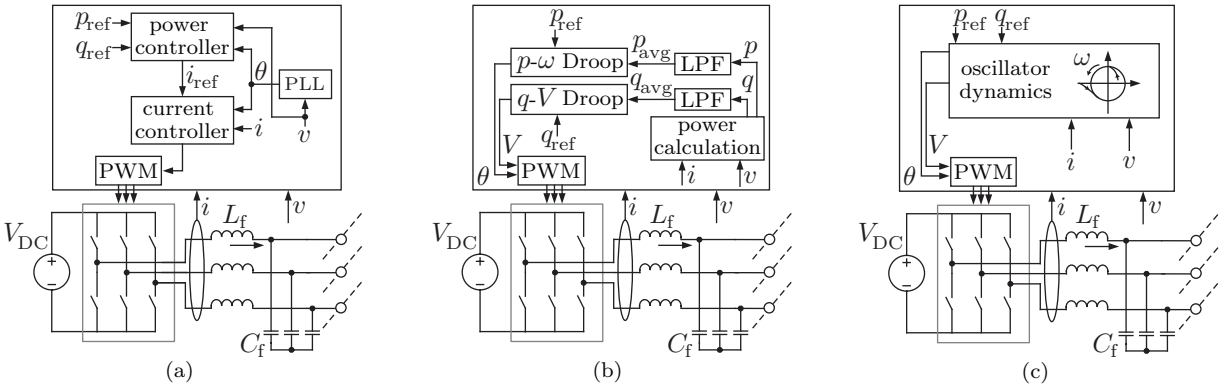

Fig. 2: Control block diagrams for the three types of inverters examined in this work: (a) grid-following inverter, (b) droop-controlled grid-forming inverter, and (c) VOC grid-forming inverter. To the extent possible, we utilize variants that have the same underlying structure and tune parameters to ensure similar dynamic response for common sub-systems across all three types.

Note 1 (Scaling Inverter Dynamics)**.** *There is a wide disparity in ratings between individual inverters and synchronous generators [1]. To reflect this in the inverter models developed above as they are integrated into the network, we presume collections of parallel-connected inverters to scale capacity to be at par with the synchronous generators they replace. Recent results in aggregating dynamics of inverters for grid-following and grid-forming inverters [4], [18]–[20] are leveraged in this work. In a nutshell, these efforts outline how to scale control and filter parameters—that one may have for individual grid-forming and grid-following inverters from data sheets or experimental prototypes—so they correspond to equivalent structure-preserving models for parallel collections.*

C. Network Model

The generators and inverters are interconnected via the electrical network that is modeled with an admittance matrix. At the inverter buses, the voltages are states, and the output currents are interface variables that depend on the networked interaction of generators and/or inverters. For the synchronous generator buses, the voltages can be expressed as a function of the currents and field linkages, and again, the currents are interface variables that depend on the network. With some algebraic manipulation, the interface variables, z (i.e., output currents), can be expressed as a function of dynamic states, x, and external inputs, u, for the generators and inverters:

$$z = g(x, u). \tag{2}$$

Note 2 (Reference-frames and transforms)**.** *Dynamics of the generators and inverters are represented in their respective local* dq *reference frames. To interconnect all systems, a coordinate transformation is performed to represent all dynamics in a common global* DQ *reference frame.*

D. Small-signal Model for Network

The complete nonlinear model for the system includes copies of small-signal models for synchronous generators and inverters (following the model descriptions in Section II-B), all interconnected via the electrical network. The system differential algebraic equation model yields the equilibrium point, around which the dynamical model is linearized to examine small-signal stability through numerical simulations. These are presented next.

TABLE I: Baseline Inverter Model Parameters.

Item	Design Selections
Inverter hardware	$P_{\rm rated}$ = 3 kVA, $V_{\rm rated}$ = 208 V, $L_{\rm f}$ = 1 mH, $C_{\rm f}$ = 24 μF, $L_{\rm g}$ = 200 μH, $R_{\rm f}$ = 0.43 Ω, $R_{\rm d}$ = 0.20 Ω, $R_{\rm g}$ = 0.05 Ω
Grid-following	$k^{\rm p}_{\rm PLL}$ = 0.11, $k^{\rm i}_{\rm PLL}$ = 0.91, $k^{\rm P}_{\rm i}$ = 1, $k^{\rm i}_{\rm i}$ = 430, $\omega_{\rm c}$ = 50.26, $k^{\rm p}_{\rm P,Q}$ = 2.08, $k^{\rm i}_{\rm P,Q}$ = 20.8
Droop	k_p = 0.05, k_q = 0.05, $\omega_{\rm f}$ = 50.26
VOC	$\kappa_{\rm v}$ = 120, $\kappa_{\rm i}$ = 0.12, ξ = 54, C = 0.053

III. Numerical Case Studies for the 39-Bus System

The system considered in our simulation studies is the IEEE 39-bus system. It contains 10 generators connected to buses $30-39$ as shown in Fig. 1. For a detailed description of the network including the parameters used and line data, please see [21]. The parameters of the unscaled inverters are shown in Table I.

We assess the stability of the system by sequentially replacing the synchronous generators with inverters that have systematically scaled model parameters as discussed previously. Second, we utilize modal analysis to determine the root cause of the instability in the system. Lastly, we run extensive simulations of various configurations to examine the system stability.

A. Small-signal Stability Analysis

With the electrical system for the case studies in place, the eigenvalues of the linearized system matrix are computed to examine the stability of the system as the inverter integration level is increased, i.e., as synchronous machines are sequentially replaced with inverters.

Figures 3(a)-(c) show the root locus of the system. It is observed that in the droop and VOC cases, the system is stable during the entire course of replacements, implying potential to achieve high DER level with stability maintained. On the other

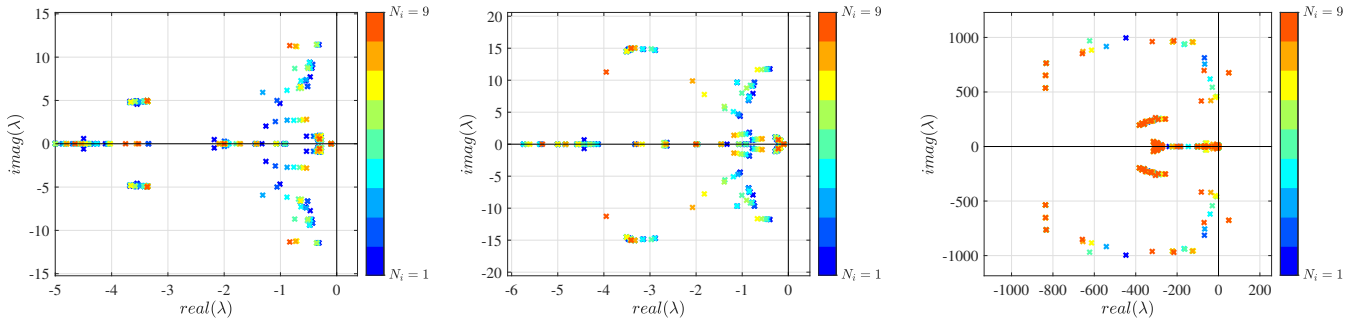

(a) VOC (b) Droop (c) Grid-following

Fig. 3: Locus of the poles with increasing inverter integration levels for all three inverter control configurations.

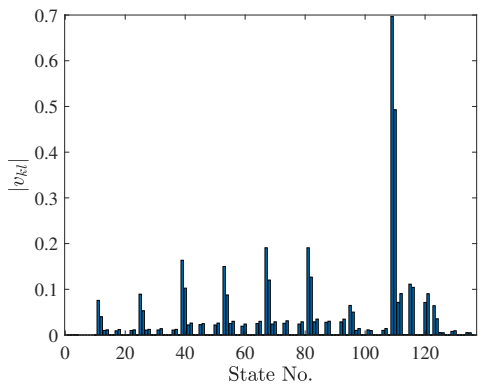

Fig. 4: Magnitude of the entries of the eigenvector associated with the unstable pole. The highest magnitude entry indicates the most destabilizing mode, which corresponds to the current states of an output filter.

hand, the grid-following case manifests signs of instability when 8 buses are replaced.

To further investigate the cases with instability, we use modal analysis to examine the contribution of specific state variables to instability. Specifically, the right eigenvectors associated with the unstable modes are studied, which gives us more information pertaining to the modes. The matrix of right eigenvectors, V, gives what is called the mode shapes. Each mode shape, denoted by v_ℓ, specifies the relative activity of the different state variables when the ℓ-th mode is excited. Each entry of v_ℓ, denoted by $v_{k\ell}$, gives information about how the state variable, Δx_k, will be impacted by the excitation of the ℓ-th mode. Figure 4 shows the magnitude of the entries of the eigenvector associated with the unstable pole. The entry with the highest magnitude has the most significant contribution to destabilize the system. For this particular test-case, the two most destabilizing modes correspond to the current states through the L_f branch of the output filter (see Fig. 2(a)) of the grid-following inverter at the 38th bus. It is also observed that the states correspond to the output filter of the other inverters have relatively large contribution to the unstable pole as well.

Following the observation that the output filter inductance, L_f, has notable contribution to the instability, its impact on the system is further studied. Here, we examine stability of the network with respect to two aspects: i) inverter level and, ii) value of output filter inductance, L_f. For the simulation, we simply scale the inductance by a factor and observe the real part of the right-most eigenvalue. The process is repeated for various inverter levels. Results are shown in Fig. 5(a)-(c). It is observed that stability of the VOC and droop cases are not significantly affected by changes in the filter inductance. However, Fig. 5(c) shows that as the filter inductance is reduced, the system becomes unstable with less generators replaced, which indicates lower filter inductance leads to a less stable system.

An interesting outcome from the simulation studies is that some buses appear to have more significant impact on system stability. Figure 6 shows results from extensive simulations of various configurations. In each case, colours blue and yellow in the top rows indicate whether a bus has a generator or an inverter, respectively. The lower rows show the stability results of the overall system. It is observed that the system is stable (shown in green) in some cases and unstable (shown in red) in others. Notably, the VOC and droop cases are stable for all configurations. In the grid-following case, however, the system is unstable for a wide number of instances. Also, some unstable cases have less inverter buses than some stable cases. The general pattern is that an instance which includes Bus 38 as a grid-following bus shows signs of instability. This indicates the location of the inverter plays an important role in system stability. More study on this topic is a direction for future work.

IV. Concluding Remarks and Directions for Future Work

In this paper, we introduced a systematic method for studying the effect of increasing inverter integration levels into the grid, and examined small-signal stability issues in the IEEE 39-bus system with a mixed collection of synchronous generators, grid-following inverters, droop-controlled grid-forming inverters, and VOC grid-forming inverters. As part of future work, we aim to explore stability analysis methods suitable for nonlinear models and to develop frameworks that uncover the role of topology and location of resources on stability. We will also investigate systems with multiple inverter types, and scenarios where there are multiple inverter types at the same bus.

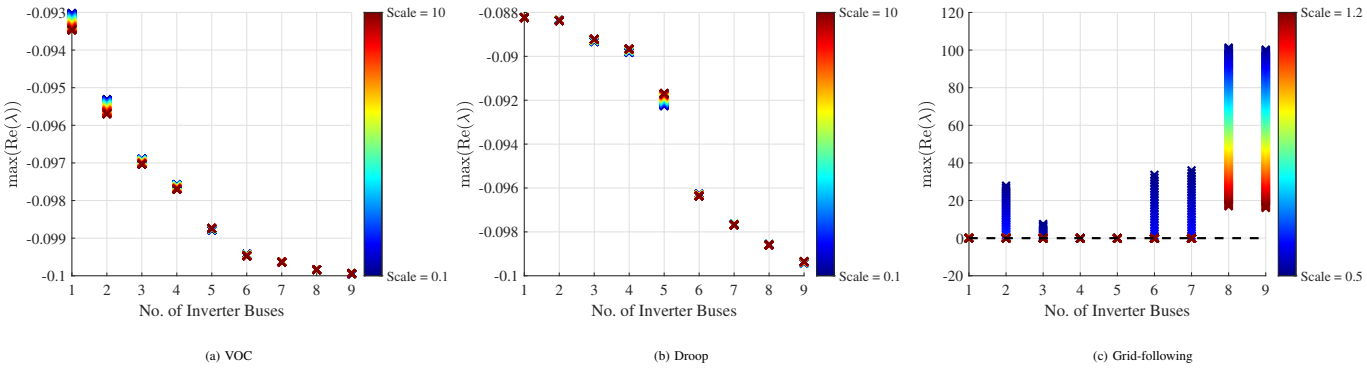

(a) VOC (b) Droop (c) Grid-following

Fig. 5: System stability assessment for different DER levels using eigen analyis. Maximum of the real part of eigenvalues with filter inductor scaled by a factor.

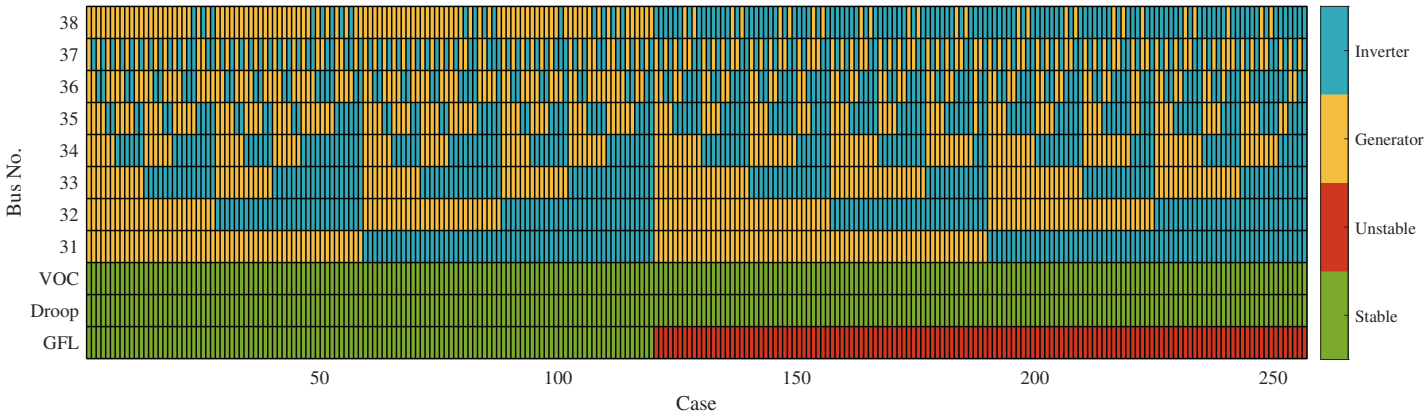

Fig. 6: Stable and unstable configurations of the IEEE 39-bus test system with an exhaustive combination of synchronous generators, droop-controlled grid-forming inverters, VOC grid-forming inverters, and grid-following inverters. Configurations where the synchronous generator at bus 38 is replaced with a grid-following inverter are likely to be unstable.

References

[1] J. A. Taylor, S. V. Dhople, and D. S. Callaway, "Power systems without fuel," *Renewable and Sustainable Energy Reviews*, vol. 57, pp. 1322–1336, May 2016.

[2] F. Milano, F. Dörfler, G. Hug, D. J. Hill, and G. Verbič, "Foundations and challenges of low-inertia systems," in *2018 Power Systems Computation Conference (PSCC)*, pp. 1–25, 2018.

[3] P. W. Sauer and M. A. Pai, *Power system dynamics and stability*, vol. 101. Wiley Online Library, 1998.

[4] Y. Lin, B. Johnson, V. Gevorgian, V. Purba, and S. Dhople, "Stability assessment of a system comprising a single machine and inverter with scalable ratings," in *2017 North American Power Symposium (NAPS)*, pp. 1–6, 2017.

[5] M. M. S. Khan, Y. Lin, B. Johnson, M. Sinha, and S. Dhople, "Stability assessment of a system comprising a single machine and a virtual oscillator controlled inverter with scalable ratings," in *IECON 2018-44th Annual Conference of the IEEE Industrial Electronics Society*, pp. 4057–4062, 2018.

[6] W. Du, Z. Chen, K. P. Schneider, R. H. Lasseter, S. P. Nandanoori, F. K. Tuffner, and S. Kundu, "A comparative study of two widely used grid-forming droop controls on microgrid small-signal stability," *IEEE Journal of Emerging and Selected Topics in Power Electronics*, vol. 8, no. 2, pp. 963–975, 2019.

[7] D. Pattabiraman, R. Lasseter, and T. Jahns, "Comparison of grid following and grid forming control for a high inverter penetration power system," in *2018 IEEE Power & Energy Society General Meeting (PESGM)*, pp. 1–5, 2018.

[8] A. Gholami and X. A. Sun, "A fast certificate for power system small-signal stability," *arXiv:2008.02263*, 2020.

[9] R. Ortega, M. Galaz, A. Astolfi, Yuanzhang Sun, and T. Shen, "Transient stabilization of multimachine power systems with nontrivial transfer conductances," *IEEE Transactions on Automatic Control*, vol. 50, no. 1, pp. 60–75, 2005.

[10] T. Jouini and F. Dorfler, "Parametric local stability condition of a multi-converter system," *IEEE Transactions on Automatic Control*, pp. 1–1, 2020.

[11] G. Weiss, F. Dörfler, and Y. Levron, "A stability theorem for networks containing synchronous generators," *Systems & Control Letters*, vol. 134, p. 104561, 2019.

[12] U. Markovic, O. Stanojev, E. Vrettos, P. Aristidou, and G. Hug, "Understanding stability of low-inertia systems," *engrXiv*, 2019.

[13] I. Hiskens, "IEEE PES task force on benchmark systems for stability controls," *Technical Report*, 2013.

[14] M. Rasheduzzaman, J. A. Mueller, and J. W. Kimball, "Reduced-order small-signal model of microgrid systems," *IEEE Transactions on Sustainable Energy*, vol. 6, no. 4, pp. 1292–1305, 2015.

[15] A. Yazdani and R. Iravani, *Voltage-sourced converters in power systems: modeling, control, and applications*. John Wiley & Sons, 2010.

[16] B. Johnson, M. Rodriguez, M. Sinha, and S. Dhople, "Comparison of virtual oscillator and droop control," in *2017 IEEE 18th Workshop on Control and Modeling for Power Electronics (COMPEL)*, pp. 1–6, 2017.

[17] M. Lu, S. Dutta, V. Purba, S. Dhople, and B. Johnson, "A grid-compatible virtual oscillator controller: Analysis and design," in *2019 IEEE Energy Conversion Congress and Exposition (ECCE)*, pp. 2643–2649.

[18] M. Khan, Y. Lin, B. Johnson, V. Purba, M. Sinha, and S. Dhople, "A reduced-order aggregated model for parallel inverter systems with virtual oscillator control," in *2018 IEEE 19th Workshop on Control and Modeling for Power Electronics (COMPEL)*, pp. 1–6, 2018.

[19] V. Purba, B. B. Johnson, M. Rodriguez, S. Jafarpour, F. Bullo, and S. V. Dhople, "Reduced-order aggregate model for parallel-connected single-phase inverters," *IEEE Transactions on Energy Conversion*, vol. 34, no. 2, pp. 824–837, 2019.

[20] V. Purba, B. B. Johnson, S. Jafarpour, F. Bullo, and S. V. Dhople, "Dynamic aggregation of grid-tied three-phase inverters," *IEEE Transactions on Power Systems*, vol. 35, no. 2, pp. 1520–1530, 2020.

[21] M. Pai, *Energy function analysis for power system stability*. Springer Science & Business Media, 2012.