Secure and Cost-Effective Micro Phasor Measurement Unit (PMU)-Like Metering for Behind-the-Meter (BTM) Solar Systems Using Blockchain-Assisted Smart Inverters

Preprint

Abdullah A. Hadi,[1] Gomanth Bere,[1] Taesic Kim,[1] Justin J. Ochoa,[1] Jianwu Zeng,[2] and Gab-Su Seo[3]

[1] Texas A&M University-Kingsville
[2] Minnesota State University
[3] National Renewable Energy Laboratory

Presented at the 2020 IEEE Applied Power Electronics Conference and Exposition (IEEE APEC)
New Orleans, Louisiana
March 15–19, 2020

NREL is a national laboratory of the U.S. Department of Energy
Office of Energy Efficiency & Renewable Energy
Operated by the Alliance for Sustainable Energy, LLC

This report is available at no cost from the National Renewable Energy Laboratory (NREL) at www.nrel.gov/publications.

Contract No. DE-AC36-08GO28308

Conference Paper
NREL/CP-5D00-75447
March 2020

Secure and Cost-Effective Micro Phasor Measurement Unit (PMU)-Like Metering for Behind-the-Meter (BTM) Solar Systems Using Blockchain-Assisted Smart Inverters

Preprint

Abdullah A. Hadi,[1] Gomanth Bere,[1] Taesic Kim,[1] Justin J. Ochoa,[1] Jianwu Zeng,[2] and Gab-Su Seo[3]

[1] *Texas A&M University-Kingsville*
[2] *Minnesota State University*
[3] *National Renewable Energy Laboratory*

Suggested Citation
Hadi, Abdullah A., Gomanth Bere, Taesic Kim, Justin J. Ochoa, Jianwu Zeng, and Gab-Su Seo. 2020. *Secure and Cost-Effective Micro Phasor Measurement Unit (PMU)-Like Metering for Behind-the-Meter (BTM) Solar Systems Using Blockchain-Assisted Smart Inverters: Preprint*. Golden, CO: National Renewable Energy Laboratory. NREL/CP-5D00-75447. https://www.nrel.gov/docs/fy20osti/75447.pdf.

© 2020 IEEE. Personal use of this material is permitted. Permission from IEEE must be obtained for all other uses, in any current or future media, including reprinting/republishing this material for advertising or promotional purposes, creating new collective works, for resale or redistribution to servers or lists, or reuse of any copyrighted component of this work in other works.

NREL is a national laboratory of the U.S. Department of Energy
Office of Energy Efficiency & Renewable Energy
Operated by the Alliance for Sustainable Energy, LLC

This report is available at no cost from the National Renewable Energy Laboratory (NREL) at www.nrel.gov/publications.

Contract No. DE-AC36-08GO28308

Conference Paper
NREL/CP-5D00-75447
March 2020

National Renewable Energy Laboratory
15013 Denver West Parkway
Golden, CO 80401
303-275-3000 • www.nrel.gov

NOTICE

This work was authored in part by the National Renewable Energy Laboratory, operated by Alliance for Sustainable Energy, LLC, for the U.S. Department of Energy (DOE) under Contract No. DE-AC36-08GO28308. Funding provided by U.S. Department of Energy Office of Energy Efficiency and Renewable Energy Solar Energy Technologies Office. The views expressed herein do not necessarily represent the views of the DOE or the U.S. Government. The U.S. Government retains and the publisher, by accepting the article for publication, acknowledges that the U.S. Government retains a nonexclusive, paid-up, irrevocable, worldwide license to publish or reproduce the published form of this work, or allow others to do so, for U.S. Government purposes.

This report is available at no cost from the National Renewable Energy Laboratory (NREL) at www.nrel.gov/publications.

U.S. Department of Energy (DOE) reports produced after 1991 and a growing number of pre-1991 documents are available free via www.OSTI.gov.

Cover Photos by Dennis Schroeder: (clockwise, left to right) NREL 51934, NREL 45897, NREL 42160, NREL 45891, NREL 48097, NREL 46526.

NREL prints on paper that contains recycled content.

Secure and Cost-Effective Micro Phasor Measurement Unit (PMU)-Like Metering for Behind-the-Meter (BTM) Solar Systems using Blockchain-Assisted Smart Inverters

Abdullah A. Hadi[1], Gomanth Bere[1], Taesic Kim[1*], Justin J. Ochoa[1], Jianwu Zeng[2], Gab-Su Seo[3]
[1]Electrical Engineering and Computer Science, Texas A&M University-Kingsville, Kingsville, USA
[2]Electrical and Computer Engineering and Technology, Minnesota State University, Mankato, USA
[3]Power Systems Engineering Center, National Renewable Energy Laboratory, Golden, USA
{abdullah_al.hadi, gomanth.bere, justin.ochoa}@students.tamuk.edu, taesic.kim@tamuk.edu, jianwu.zeng@mnsu.edu, gabsu.seo@nrel.gov

***Abstract*—Recently, there is increasing interest in using behind-the-meter (BTM) solar systems for grid services. However, providing visibility and operational situational awareness of BTM solar systems mainly operated by small-scale solar inverters is challenging due to the requirement of relatively expansive networked observation tools (e.g., micro phasor measurement units (µPMUs)) and consequent cybersecurity threats through networks. This paper presents a secure, cost-effective, µPMUs-like metering method using a blockchain-assisted smart (BAS) inverters for a BTM solar system. The proposed BAS inverter consisting of an internet of things device as a node of a local blockchain network enables the secure provision of inverter measurement data for grid services. The BAS inverter sends the encrypted local measurement data with a timestamp to a local blockchain miner. Once the blockchain miner generates a tamper-resistant metering ledger including the measurements, it is used to assess the situational awareness of the BTM solar system. The concept of the proposed metering using the BAS inverters is validated by experimental studies.**

Keywords—behind the meter, blockchain, cybersecurity, smart inverter, micro phasor measurement unit.

I. Introduction

In general, grid services have been performed by grid operators to maintain and improve the power flow and quality of electricity, using centralized generators that streamline grid operation including generation, transmission, and distribution [1]-[3]. As the penetration of variable renewable energy generation dramatically increases, however, the involvement of the new generation assets would be critical to stabilize the future grid. Recent research has validated the viability of using utility-scale photovoltaic (PV) systems to support grid services [4]. Since the utility-scale assets are usually in MW to GW, their coordination with other generation assets and contribution to grid services can be straightforwardly achieved. On the other hand, distributed energy resources (DERs), usually connected behind-the-meter (BTM) that might be accessed by existing utility monitoring devices, can pose significant technical challenges in grid operation and management as the BTM assets account for substantial portion of the recent and new renewable energy installation, e.g., new PV generation in residential and commercial sector takes more than 30% of new solar installation in 2018 in the United States [5].

Using BTM resources for grid services has been proposed [6]-[8]. Despite the wide adoption of smart meters, micro-phasor measurement units (µPMUs) [9], measurements from small-scale DERs are not generally integrated into grid management tools due to the additional cost of the observation tools. Therefore, grid operators have had little information and control over the distributed BTM resources on distribution networks. As a result, it is challenging to provide the situational awareness of BTM resources, which may cause adversary effects from DERs including existing applications such as load forecasting [10]. Furthermore, cybersecurity vulnerabilities are created by the need for increased levels of data sharing between the BTM assets and the electric grid through metering devices [11].

Blockchain is a distributed database that maintains a continuously growing list of data records secured from tampering and revision [12]. Recently, blockchain technologies incorporating blockchain ledgers and smart contracts, which are self-executing scripts, have been widely studied in many applications, such as peer-to-peer transactions, supply chains, energy trading using PV systems [13], demand-side management [14], and Internet of Things (IoT) security and privacy [15]. However, to the best of the authors' knowledge, the detailed investigation of BTM metering using blockchain technology has not been studied.

This paper proposes a µPMU-like metering method using the smart inverters incorporating blockchain technology, named *blockchain-assisted smart (BAS) inverters*, to enhance the visibility and situational awareness of the small-scale BTM solar systems for grid services. By using blockchain technology, the proposed method will provide security-improved and cost-effective data aggregation and monitoring of the BTM solar systems. The concept of the proposed metering method is validated by experimental studies with IoT-enabled smart solar inverters and compared the result with a commercial PMU system.

This report is available at no cost from the National Renewable Energy Laboratory (NREL) at www.nrel.gov/publications.

Device Overview

Metering

I MAG		I ANG		V MAG		V ANG	
A	0.25 A	A	0.00°	A	0.060 kV	A	-120.06°
B	0.00 A	B	-15.15°	B	0.000 kV	B	-15.15°
C	0.00 A	C	-15.15°	C	0.000 kV	C	-15.15°
N	0.00 A	N	-15.15°				
G	0.25 A	G	0.00°				

FREQ (Hz) 59.98

(a)

FEEDER 1 Date: 10/28/19 Time: 16:28:20.530
STATION A

	A	B	C	N	G
I MAG (A)	0.255	0.000	0.000	0.000	0.255
I ANG (DEG)	120.03	0.00	0.00	0.00	120.03

	A	B	C
V MAG (KV)	0.059	0.000	0.000
V ANG (DEG)	0.00	0.00	0.00

	A	B	C	3P
MW	0.000	0.000	0.000	0.000
MVAR	0.000	0.000	0.000	0.000
PF	1.000	1.000	1.000	1.000
	LAG	LAG	LAG	LAG

(b)

Harmonic Metering Values

FEEDER 1 Date: 10/28/19 Time: 16:29:11.719
STATION A

	Currents (A pri)				Voltages (kV pri)		
	IA	IB	IC	IN	VA	VB	VC
THD (%)	3	0	0	0	2	0	0
RMS	0.26	0.00	0.00	0.00	0.06	0.00	0.00
Fund.	0.26	0.00	0.00	0.00	0.06	0.00	0.00

(c)

Fig. 1. An example of PMU measurement data: (a) the system overview, (b) instantaneous voltage, current, and power measurement, and (c) harmonic metering values.

II. Related Work

A. Phasor Measurement Unit

A PMU provides high sampling rate phasor information of the grid voltage and current measured at a remote location with time stamps synchronized by a global positioning system (GPS). This timestamped measurement improves the visibility of the system information in a comprehensive manner. The function of the PMU mainly divided into three main components: measurement, computation, and communication [16], [17]. The measurement component consists of potential transformers (PTs) and current transformers (CTs) which are used to measure the voltage and current information, respectively along with other analog devices. Computation component mainly includes an analog to digital converter (ADC), power estimation algorithm, and GPS time stamping. Communication component send the GPS time-tagged information packet to a grid operator using communication protocol such as IEEE C37.118. Although this communication protocol is the most updated version that IEEE recommends, it is still vulnerable to cyber-attacks which can manipulate the metering data as well as physically harm the devices [18]. In this paper, a PMU from Schweitzer Engineering Laboratories (SEL) (model number 351A-1) is tested for the result verification and comparison with the proposed PMU-like BAS inverters. This three-phase PMU from SEL can measure data such as three phase root mean square (RMS), instantaneous voltage, current, phase angle; and the active and reactive power. An internal GPS is used to generate accurate timestamps of the collected information. Fig. 1 shows the outlook of the metering data measured by the PMU using the software interface called AcSELerator Quickset SEL-5030, where a single-phase ac voltage (i.e., 60 V) and current (i.e., 0.255 A) are applied to a load for the testing purpose. Fig. 1 (a) illustrates the overview of the three-phase voltage and current magnitude and angle information measured by the PMU. Since only a single-phase system is built for the inverter operation, a single-phase voltage, current, and phase angle values are measured. The PMU also provides the grid frequency with instantaneous voltage and current amplitude as shown in Fig. 1(a). Fig. 1(b) include power measurement with a measurement time stamp, where active and reactive power data is monitored null because of the high-power range (in MW and MVAR) measurement functionality of the PMU. The PMU also provides the voltage and current harmonics as shown in Fig. 1(c).

It would be reasonable that PMUs are placed, in general, at the transmission lines and circuit breakers in substations to identify potential grid disturbance issues and to realize timely contingency response in a transmission-interfaced synchronous generator-dominated grid. However, a variable renewable energy generation including DERs accounts for substantial portion of generation and thus may pose a critical challenge in system management resulting from reduced inertia, faster system dynamic, and uncertainty. Therefore, it is paramount to secure the visibility of the BTM assets to be able to address those issues. PMUs including µPMUs for small-scale power measurement, may not be economically suitable because of its device and installation cost. Moreover, the present architecture of the PMU is not suitable for the large/distributed system operation due to its limitation in visualizing the historical data for further investigation. Also, it is noted that the conventional communication protocols (e.g., IEEE C37.118) used in PMUs are vulnerable to the cyber-attacks [18], [19].

B. Blockchain Technology for µPMU-Like Metering

The blockchain technology is an emerging security platform used for secured transactions/dataset and network by combining state-of-the-art trust mechanisms such as distributed database, cryptography, and consensus algorithms. Although blockchain technology was originally designed for cryptocurrency currency transactions such as Bitcoin. it has been applied to many other applications that requires trust mechanisms by appending a smart contract. A block of blockchain consists of a block header and a body and connected to each other by a cryptographic chain. The basic structure of a blockchain is shown in Fig. 2. The block header mainly includes block ID, a timestamp, a hash of the previous block (i.e., a cryptographic link creating a chain and tamper-proof), a random nonce (i.e., used for solving the proof of work (PoW)), and Merkle tree root (i.e., encoded transactions/data in the block in a single hash for efficient data verification; any data modification will change the hash value so

This report is available at no cost from the National Renewable Energy Laboratory (NREL) at www.nrel.gov/publications.

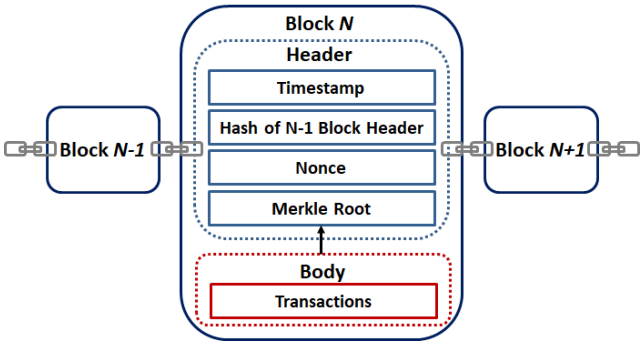

Fig. 2. General blockchain structure.

that it is easy to check data integrity). The types of the transaction will include records of the transfer of assets or data, broadcast messages, and smart contracts, which are encrypted by cryptographic digital signatures (e.g., users' private keys). Only participants who have the cryptographic keys can verify the data, time, and user of the transaction (i.e., data privacy). Therefore, such cryptographic methods will bring data integrity, privacy, and authenticity.

Fig. 3 shows the key features of blockchain technology. As discussed previously that the PMU is vulnerable in both device level and system level (communication), since the PMU system relies on manufacturer- provided ID and password-based access, hence any sort cyber-attack is possible. In view of the fact that the blockchain is hosted, updated, validated by individual peer nodes rather than by a single centralized authority, the blockchain improves the trust, security, and transparency of transactions/data due to inherent benefits such as immutability, auditability, data integrity and authentication, fault tolerance, and above all trust-free operation [12].

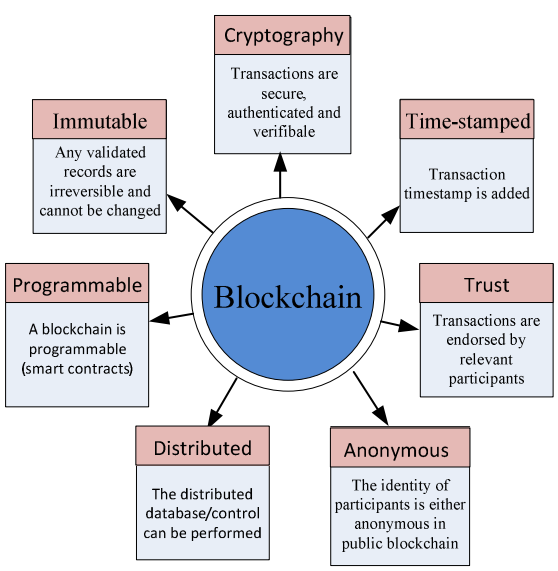

Fig. 3. Key features of blockchain technology.

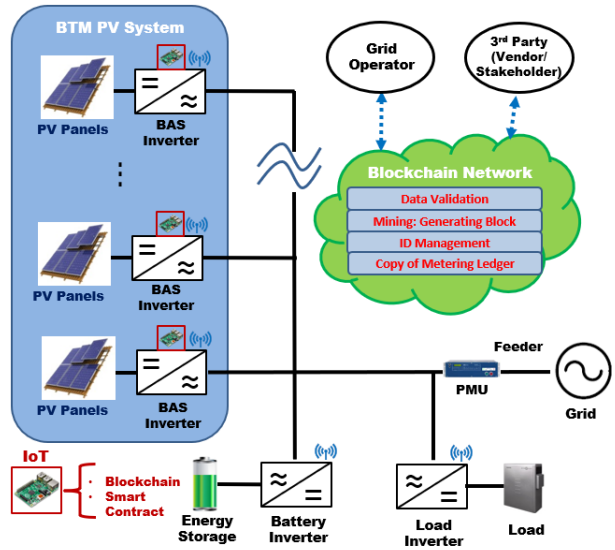

Fig. 4. The behind the meter (BTM) PV system consisting of (blockchain-assisted smart) BAS inverters and a blockchain network in smart grid environments.

III. Proposed Monitoring For Grid Services

This paper focuses on proposing a metering method using the proposed blockchain assisted smart (BAS) inverters and ultimately acting as secure and cost-effective networked µPMUs. Fig. 4 shows a BTM PV system consisting of BAS inverters and a blockchain network (e.g., edge computing, local server, cloud computing, and energy management system in a PV system).

The blockchain network is designed to validate measurement data, generate metering ledger, manage ID, and store metering ledgers. With blockchain technology, an IoT peer node can perform: 1) an interface that extracts measurement data from the inverter for grid services and delivers external commands to the inverter; 2) communication with other nodes and cloud servers; 3) access the blockchain ledgers and optionally storing the shared blockchain ledgers; and 4) executing smart contracts. In this paper, we used the IBM's Hyperledger-Fabric [20] that is an open-source blockchain platform and more applicable to the IoT applications than other BC platforms since the Hyperledger-Fabric provides private and permissioned BC, requires less energy and computational resources in consensus protocols, and does not require transaction fees/coins [21].

A. *Blockchain-Assisted Smart (BAS) Inverter*

Fig. 5 shows the overall structure of the BAS inverter that consists of a 280-W Texas Instrument (TI)'s solar microinverter [22] and a LattePanda IoT device [23]. The IoT acts as a blockchain participant node device. The two-stage micro inverter consists of a DC-DC flyback converter and a DC-AC inverter. The function of the DC-DC flyback converter is to step up the low-level PV voltage (V_{pv}) to a high-level grid/load voltage (V_g or V_L in Fig. 5) required by the cascaded DC-AC inverter, which regulates voltage from DC to AC and controls the DC bus voltage (V_{bus}) to be constant. For the DC/DC

This report is available at no cost from the National Renewable Energy Laboratory (NREL) at www.nrel.gov/publications.

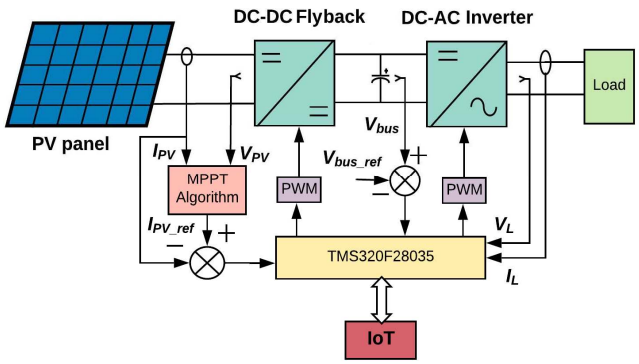

Fig. 5. Topology and control structure of a BAS inverter.

converter, reference current $I_{pv_{ref}}$ is provided by an MPPT controller. A Piccolo TMS302F28035 Isolated control card collects the data, executes the MPPT algorithm, and generates PWM signals for the inverter. The control card is interconnected by the external IoT device so that the IoT device can access data (e.g., $V_L, I_L, V_{Lrms}, I_{Lrms}$ *and* V_{bus}) stored in the control card and control the inverter. As mentioned earlier that the solar micro inverter consists of two stages, the DC/DC flyback stage that boosts the PV voltage in DC bus and the DC/AC inverter that supplies power to the load and AC grid. The same control card operates and controls both stages with MPPT algorithm, phase locked loop-control, and DC bus voltage control loop. For the simple operation and easy validation of the PMU-like smart inverter, only DC/AC inverter stage is operated and controlled in this paper. Fig. 6 shows the schematic diagram of the inverter stage which is configured in H-bridge topology with four MOSFETs $Q3$, $Q4$, $Q8$, and $Q9$. The MOSFET $Q3$ and $Q9$ operate during positive half cycle of the inverted output while Q4 and Q8 turned on for the negative half cycle. The pulse width modulation (PWM) is generated through a closed-loop control (voltage and current loop) that utilizes DC bus voltage, load

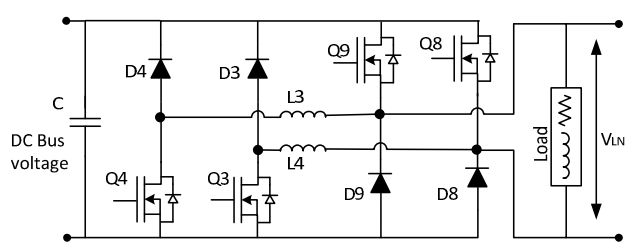

Fig. 6. Schematic diagram of DC/AC stage [17].

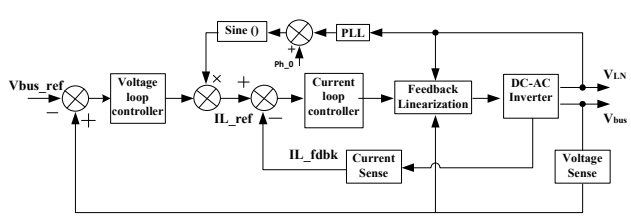

Fig. 7. Voltage and current loop control [17].

current, and load voltage. Fig. 7 shows the block diagram of the control system. The error between measured and reference values of both voltage and current is minimized through two pole two zero (2P2Z) controller for a voltage loop control and a three-pole three zero (3P3Z) controller for the current loop control. The current loop gain that is used for the controller is shown as follows:

$$G_c(Z) = \frac{0.2866-0.3173z^{-1}+0.338z^{-2}-0.2616z^{-3}}{1-1.584z^{-1}+0.6978z^{-2}-0.1137z^{-3}} \quad (1)$$

To measure the phase angle, a phase locked loop (PLL) is used which further provides the power information. The active power and reactive power are estimated using a regression algorithm [24].

B. *Blockchain Smart Contract*

Smart contracts are self-executing scripts that execute the terms of contracts triggered by designated events. If all the conditions of the contracts are satisfied, the blockchain network will execute the contract terms automatically and independently in a prescribed manner. Because a smart contract with a unique address is stored on the blockchain, users or nodes in the blockchain network can trigger the smart contract by addressing the transaction. Therefore, users have a capability of designing and implementing codes in the form of smart contracts for automated and efficient trading or workflows since smart contract provides an interface between the blockchain network and the physical world. The IoT participant node executes a smart contract called "chaincode" in Hyperledger-Fabric. Chaincode is deployed on both the server and the IoT devices to access and create the blockchain ledgers. After enrolling the

```
namespace org.example.biznet                          Project name

participant PowerParticipant identified by participantId {
o String participantId
o String firstName                                    ID and participant declaration
}

asset InverterInfo identified by measurement {
o String measurement
o String Device_Id
o String serial_no
--> PowerParticipant owner
o String IL_rms
o String IL_inst
o String VL_rms                                       Value Acquisition function
o String VL_inst
o String Phase_angle
o String Grid_frequency
o String Q
o String P_rms
o String TimeStamp
}

transaction PowerTransaction {
--> InverterInfo inverter
o String newValue                                     Creating value
}

event InverterEvent {
--> InverterInfo inverter
o String oldValue                                     Changing value
o String newValue
}
```

Fig. 8. A chaincode to generate a metering ledger.

This report is available at no cost from the National Renewable Energy Laboratory (NREL) at www.nrel.gov/publications.

client via Fabric-CA (i.e., membership service) and a certificate is issued to the participant node. Then, the authorized client can communicate with a peer node in the blockchain server using Fabric-Sdk-node. Chain codes are designed to send the measurement data with time stamps from the BAS inverters to the miner and the miner generates tamper-proof blockchain metering ledger. Once the metering ledger is generated, authorized utility companies or a third parties can access the metering data. Therefore, the proposed blockchain-based framework can improve the communication and data security of the IoT-enabled solar micro-inverters.

Fig. 8 illustrates an example of chaincode that stores the inverter measurement data in the blockchain ledgers. The chaincode can be divided into five main sections. The host will contain a project name and all the participants are identified by a given ID number. The code is followed by a value acquisition function where the parameters are assigned. Then the transaction list is created in the World State as final section which presents the most updated inverter information from the blockchain ledgers.

IV. Implementation and Validation of The Proposed PMU-Like Smart Inverter

A. Implementation

Fig. 9 depicts an experimental setup consisting of two BAS inverters, PV simulators (i.e., DC power supplies), resistive loads, and a local blockchain network in a PC. Table I illustrates the system specifications of the experimental setup. Two inverters are operating separately in islanded mode for the behind the metering system where all values such as voltage, current, active power, reactive power, phase angle, and frequency are observed. As described in Section III, LattePanda IoT device is directly connected to a Piccolo-B control card in the solar microinverter and collects necessary measurements using the graphical user interface (GUI) function by code composer studio (CCS) implemented in the IoT device for grid services. Required metering data from the control card in an inverter is defined as GUI variable in the main C coding script in order for the IoT device to extract the data from the inverter.

Fig. 10 shows the structure of the BTM PV blockchain model based on Hyperledger-Fabric platform is used to manage the overall data flow between the participant BAS inverters to the blockchain network. After enrolling the inverters via Fabric-CA (i.e., membership service), a certificate is issued to the inverters. The IoT client node executes smart contract called "chaincode" in Hyperledger-Fabric Then, the authorized BAS inverter can communicate with a peer node in the blockchain network using Fabric-Sdk-node. A block is made as follows. First, the BAS inverters send data to the blockchain network as written in the chaincode (see Fig. 8) using REST API. The data is then sent to the endorsement peers to validate the data with the chaincode. After validation, the data is sent to an orderer peer that sequences the data into a block. The block is sent to peers that store blockchain ledgers (i.e., permanent ledger) and World State (i.e., temporary ledger). Finally, authorized gird operators can read the BTM data from the blockchain ledgers and World State.

TABLE I. System Specifications

Parameter	*Value*	*Unit*
DC bus voltage (Inv-1)	81	V
DC bus voltage (Inv-2)	70	V
Resistive load	110	Ω
Inductive load	30	mH
Switching frequency	50	kHz

B. Validation

Fig. 11(a) shows the oscilloscope waveforms of V_L ($= V_{L_{inst}}$) and I_L ($=I_{L_{inst}}$) that are measured from the inverter board. Fig. 11(b) shows the waveforms observed from the BAS inverter using the GUI instantaneous voltage, current, and power data by the CCS. Fig. 12(a) shows the chronological metering ledger data including instantaneous values and their measurement time stamps. On the other hand, Fig. 12(b) exhibits the BTM system overview in the World State including current measurement of voltage, current, active power, reactive power, and the grid frequency acquired from the two inverters. It is noted that the BAS inverters can aggregate multiple sources of information with individual device identities. Hence, the proposed metering method using the BAS inverters has a potential to be also used as a networked µPMUs for grid services.

Table II summarizes the overall comparison between PMU and BAS inverters. This research results prove that the group of the proposed BAS smart inverters can potentially perform the

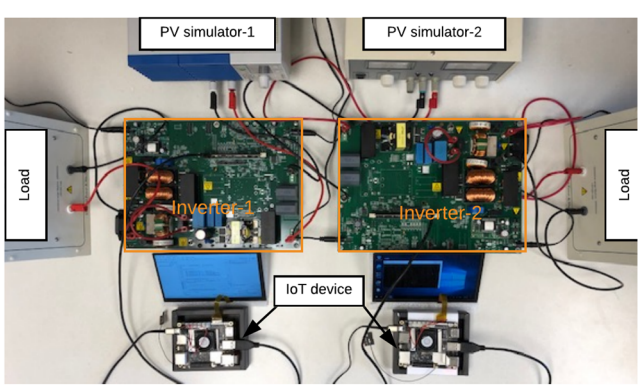

Fig. 9. Experimental setup with two IoT enabled smart inverter.

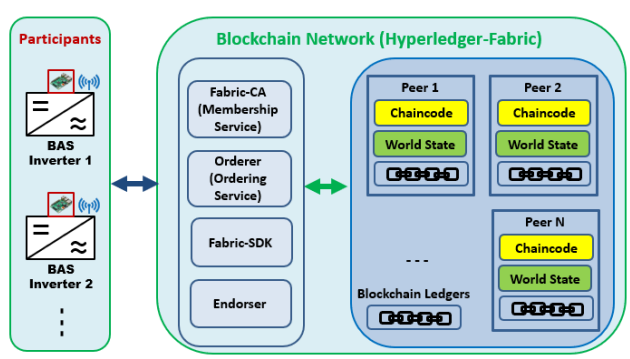

Fig. 10. Structure of the BTM PV blockchain model based on Hyperledger-Fabric.

This report is available at no cost from the National Renewable Energy Laboratory (NREL) at www.nrel.gov/publications.

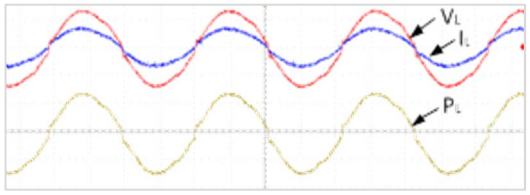

(a)

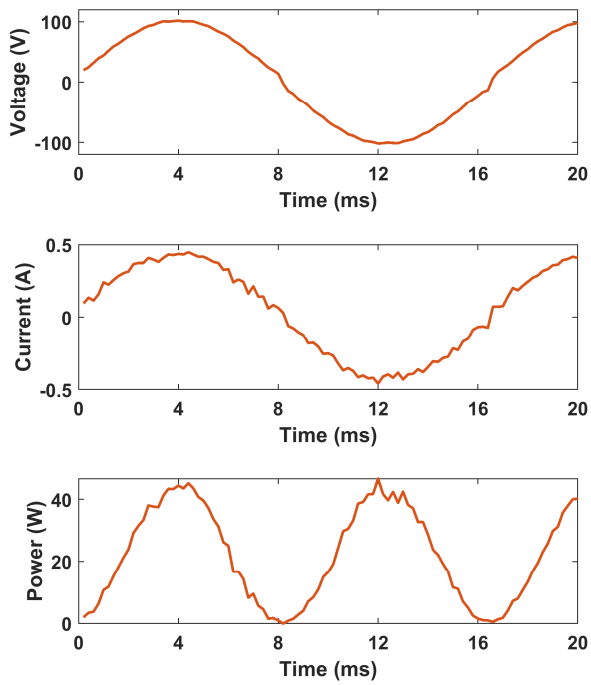

(b)

Fig. 11. Experimental waveforms: (a) oscilloscope and (b) BAS inverter.

PMU metering to provide visibility and operational situational awareness of the BTM PV systems mainly with high cost effeteness, reliability, flexibility, and security. Unlike the PMU-based observation tools, the data collection and management are not limited, meaning that, any type of information can be collected and monitored from multiple sources.

TABLE II. COMPARISON OF METERING FUNCTIONALITES OF PMU AND BAS INVERTERS

Function	*PMU*	*BAS Inverters*
Observability	Mainly system level	Device level
Security strategies	- ID-password based access control - Encription	-Authentication -Data confidentiality -Data integrity -Access control
Cost per device	$2,000~$5,000	$20~$100
Data type	Limited to grid level infomration only	Device level and possible to grid
Timestamp	Yes (GPS)	Yes (Inverter, blockchain)
Smapling rate	10-60 samples/s	20 samples/s (can be tunable)

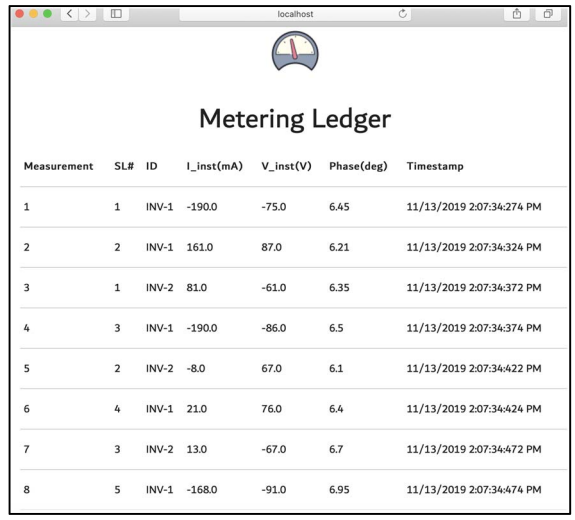

Measurement	SL#	ID	I_inst(mA)	V_inst(V)	Phase(deg)	Timestamp
1	1	INV-1	-190.0	-75.0	6.45	11/13/2019 2:07:34:274 PM
2	2	INV-1	161.0	87.0	6.21	11/13/2019 2:07:34:324 PM
3	1	INV-2	81.0	-61.0	6.35	11/13/2019 2:07:34:372 PM
4	3	INV-1	-190.0	-86.0	6.5	11/13/2019 2:07:34:374 PM
5	2	INV-2	-8.0	67.0	6.1	11/13/2019 2:07:34:422 PM
6	4	INV-1	21.0	76.0	6.4	11/13/2019 2:07:34:424 PM
7	3	INV-2	13.0	-67.0	6.7	11/13/2019 2:07:34:472 PM
8	5	INV-1	-168.0	-91.0	6.95	11/13/2019 2:07:34:474 PM

(a)

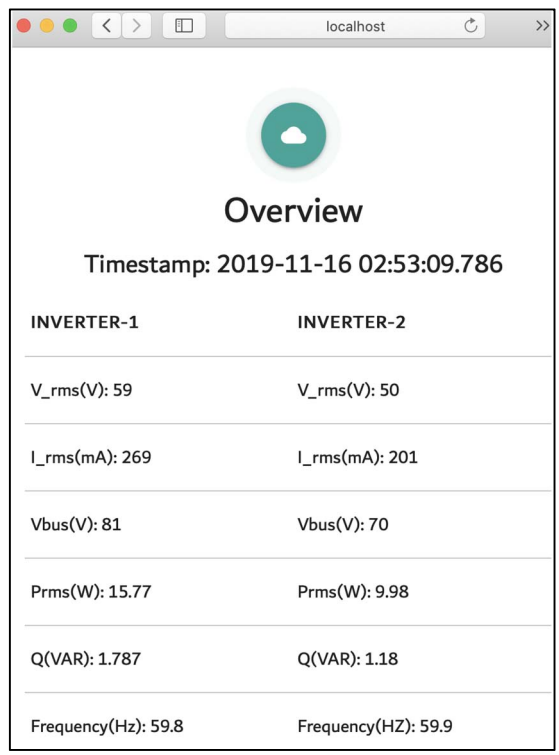

(b)

Fig. 12. Web-based user interface to observe the metering ledger using Hyperledger Fabric: (a) blockchain ledger information including instantaneous values and their measurement time stamps and (b) the World State information monitoring overall status of the inverters.

V. CONCLUSION

This paper has introduced the concept of the BAS inverter and proposes a µPMU-like metering method using the group of BAS inverters used in the BTM solar system to enhance the visibility and situational awareness for advanced grid services. It is expected that the proposed method has a significant potential to provide security-improved and cost-effective monitoring of the small scale BTM solar systems. The concept

This report is available at no cost from the National Renewable Energy Laboratory (NREL) at www.nrel.gov/publications.

of the proposed metering method is validated by experimental studies. Future works include developing a new blockchain model tailored to smart inverters that solve current issues of the blockchain model such as growing ledger, reducing complexity and latency as well as improving time synchronization and power estimation algorithms.

ACKNOWLEDGMENT

This work was authored in part by the National Renewable Energy Laboratory, operated by Alliance for Sustainable Energy, LLC, for the U.S. Department of Energy (DOE) under Contract No. DE-AC36-08GO28308. Funding was provided in part by U.S. Department of Energy Office of Energy Efficiency and Renewable Energy Solar Energy Technologies Office. The views expressed in the article do not necessarily represent the views of the DOE or the U.S. Government.

REFERENCES

[1] Pacific Gas and Electric, "Enabling Smart Inverters for Distribution Grid Services," [online] Available: https://www.pge.com/pge_global/common/pdfs/about-pge/environment/what-we-are-doing/electric-programinvestment-charge/Joint-IOU-SI-White-Paper.pdf. October 2018.

[2] IEEE Power and Energy Magazine, "Maintaining Balance: The Increasing Role of Energy Storage for Renewable Integration," [online] Available: https://ieeexplore.ieee.org/document/8070540. November–December 2017.

[3] Pacific Northwest National Laboratory, "Grid Architecture: Advanced Concepts," [online] Available: https://gridarchitecture.pnnl.gov/advanced-concepts.aspx.

[4] National Renewable Energy Laboratory, "Demonstration of Essential Reliability Services by a 300-MW Solar Photovoltaic Power Plant," [online] available: https://www.nrel.gov/docs/fy17osti/67799.pdf. Mar. 2017.

[5] Bloomberg NEF, "Annual Global PV New Build," Bloomberg Professional service," Tech. Rep., Jul. 2019.

[6] [Online] Available: https://www.hybridynepower.com/Page_04.01.htm.

[7] Y. Kim, G. Del-Rosario-Calaf, and L. K. Norford, "Analysis and experimental implementation of grid frequency regulation using behind-the-meter batteries compensating for fast load demand variations," *IEEE Trans. Power Systems*, vol. 32, no. 1, pp. 484-498, Jan. 2017.

[8] I. S. Bayram and T. S. Ustun, "A survey on behind the meter energy management systems in smart grid," *Renewable and Sustainable Energy Reviews*, vol. 72, pp. 1208-1232, May 2017.

[9] A. V. Meier, D. Culler, A. McEachern, and R. Arghandeh, "Microsynchrophasors for distribution systems," in *Proc. IEEE ISGT*, Washington, DC, Feb. 19-22, 2014, pp. 1-5.

[10] Y. Wang, N. Zhang, O. Chen, D. S. Kirschen, P. Li, and Q. Xia, "Data-driven probabilistic net load forecasting with high penetration of behind-the-meter PV," *IEEE Trans. Power Systems*, vol. 33, no. 3, pp. 3255-3264, Oct. 2017.

[11] J. Qi, A. Hanh, X. Lu, J. Wang, C-C Liu, "Cybersecurity for distributed energy resources and smart inverters," *IET Cyber-Physical Systems: Theory & Applications*, vol.1, no.1, pp. 28-39, Dec. 2016.

[12] N. Prusty, Building Blockchain projects, Packt Publishing, Feb. 2017.

[13] Microgrid Media, "It's like the early days of the internet, Blockchain-based microgrid tests P2P energy trading in Brooklyn," Mar. 2016.

[14] E. Munsing, J. Mather, and S. Moura, "Blockchains for decentralized optimization of energy resources in microgrid networks," in *Proc. Conf. Control Technol. and Appl.*, Mauna Lani, HI, USA, Aug. 27-30, 2017. pp.1-8.

[15] K. Christidis and M. Devetsikiotis, "Blockchains and smart contracts for the Internet of things," *IEEE ACESS*, vol. 4, pp. 2292-2303, 2016.

[16] J. Zhao, L. Zhan, Y. Liu, H. Qi, J. R. Garcia and P. D. Ewing, "Measurement accuracy limitation analysis on synchrophasors," in *Proc.* 2015 *IEEE Power & Energy Society General Meeting*, Denver, CO, Jul. 26-30, 2015, pp. 1-5.

[17] A. T. Al-Hammouri, L. Nordström, M. Chenine, L. Vanfretti, N. Honeth and R. Leelaruji, "Virtualization of synchronized phasor measurement units within real-time simulators for smart grid applications," in *Proc. 2012 IEEE Power and Energy Society General Meeting*, San Diego, CA, Jul. 22-26, 2012, pp. 1-7.

[18] R. Khan, K. McLaughlin, D. Laverty, and S. Sezer, "IEEE C37.118-2 synchrophasor communication framework - Overview, cyber vulnerabilities analysis and performance evaluation," *in Proc. The 2nd International Conference on Information Systems Security and Privacy* , Rome, Italy, 2016, pp. 167-178.

[19] Y. Deng, S. Shukla, "Vulnerabilities and countermeasures - A survey on the cyber security issues in the transmission subsystem of a smart grid," *J. Cyber Security and Mobility*, vol. 1, pp. 251-276, 2012.

[20] Hyberledger-Fabric, [online] Available, https://www.ibm.com/blockchain/hyperledger.html.

[21] I. Makhdoom, M. Abolhasan, H. Abbas, and W. Ni, "Blockchain's adoption in IoT: The challenges, and a way forward," *J. Network and Comp. Appl.*, vol. 125, pp. 251-279, Jan. 2019.

[22] Texas Instrument, Solar micro inverter development kit, [Online] Available: http://www.ti.com/tool/TMDSSOLARUINVKIT.

[23] LattePanda, [Online] Available: https://www.lattepanda.com/.

[24] T. Kim, X. Zhang, S. Park, J. Zeng, and C. Wei, "A novel phase-locked loop-enabled power estimator for single-phase power electronic converters," in *Proc. 2018 International Conference on Circuit, Devices and Systems (ICCDS 2018)*, Shanghai, China, Nov. 24-26, 2018, pp. 240-244.

This report is available at no cost from the National Renewable Energy Laboratory (NREL) at www.nrel.gov/publications.