# Operando Microscopy Characterization of Perovskite Solar Cells

## Preprint

Chuanxiao Xiao,[1] Changlei Wang,[2,3] Chun-Sheng Jiang,[1] Zhaoning Song,[2] Yanfa Yan,[2] and Mowafak Al-Jassim[1]

[1] *National Renewable Energy Laboratory*
[2] *The University of Toledo*
[3] *Soochow University*

*Presented at the 46th IEEE Photovoltaic Specialists Conference (PVSC 46)*
*Chicago, Illinois*
*June 16–21, 2019*

**NREL is a national laboratory of the U.S. Department of Energy**
**Office of Energy Efficiency & Renewable Energy**
**Operated by the Alliance for Sustainable Energy, LLC**

This report is available at no cost from the National Renewable Energy Laboratory (NREL) at www.nrel.gov/publications.

Contract No. DE-AC36-08GO28308

**Conference Paper**
NREL/CP-5K00-73109
June 2019

# Operando Microscopy Characterization of Perovskite Solar Cells

## Preprint

Chuanxiao Xiao,[1] Changlei Wang,[2,3] Chun-Sheng Jiang,[1] Zhaoning Song,[2] Yanfa Yan,[2] and Mowafak Al-Jassim[1]

[1] *National Renewable Energy Laboratory*
[2] *The University of Toledo*
[3] *Soochow University*

**Suggested Citation**
Xiao, Chuanxiao, Changlei Wang, Chun-Sheng Jiang, Zhaoning Song, Yanfa Yan, and Mowafak Al-Jassim. 2019. *Operando Microscopy Characterization of Perovskite Solar Cells: Preprint*. Golden, CO: National Renewable Energy Laboratory. NREL/CP-5K00-73109. https://www.nrel.gov/docs/fy19osti/73109.pdf.

© 2019 IEEE. Personal use of this material is permitted. Permission from IEEE must be obtained for all other uses, in any current or future media, including reprinting/republishing this material for advertising or promotional purposes, creating new collective works, for resale or redistribution to servers or lists, or reuse of any copyrighted component of this work in other works.

**NREL is a national laboratory of the U.S. Department of Energy**
**Office of Energy Efficiency & Renewable Energy**
**Operated by the Alliance for Sustainable Energy, LLC**

This report is available at no cost from the National Renewable Energy Laboratory (NREL) at www.nrel.gov/publications.

Contract No. DE-AC36-08GO28308

**Conference Paper**
NREL/CP-5K00-73109
June 2019

National Renewable Energy Laboratory
15013 Denver West Parkway
Golden, CO 80401
303-275-3000 • www.nrel.gov

**NOTICE**

This work was authored by the National Renewable Energy Laboratory, operated by Alliance for Sustainable Energy, LLC, for the U.S. Department of Energy (DOE) under Contract No. DE-AC36-08GO28308. Funding provided by the U.S. Department of Energy Office of Energy Efficiency and Renewable Energy Solar Energy Technologies Office. The views expressed herein do not necessarily represent the views of the DOE or the U.S. Government. The U.S. Government retains and the publisher, by accepting the article for publication, acknowledges that the U.S. Government retains a nonexclusive, paid-up, irrevocable, worldwide license to publish or reproduce the published form of this work, or allow others to do so, for U.S. Government purposes.

This report is available at no cost from the National Renewable Energy Laboratory (NREL) at www.nrel.gov/publications.

U.S. Department of Energy (DOE) reports produced after 1991 and a growing number of pre-1991 documents are available free via www.OSTI.gov.

*Cover Photos by Dennis Schroeder: (clockwise, left to right) NREL 51934, NREL 45897, NREL 42160, NREL 45891, NREL 48097, NREL 46526.*

NREL prints on paper that contains recycled content.

# Operando Microscopy Characterization of Perovskite Solar Cells

Chuanxiao Xiao,[1] Changlei Wang,[2,3] Chun-Sheng Jiang,[1] Zhaoning Song,[2] Yanfa Yan,[2] and Mowafak Al-Jassim[1]

[1]National Renewable Energy Laboratory, Golden, CO 80401 USA

[2]The University of Toledo, Toledo, OH 43606 USA
[3]Soochow University, Suzhou, Jiangsu 205000 China

***Abstract* —In this work, we developed operando Kelvin probe force microscopy (KPFM) to study the electrostatic potential distribution across perovskite cells under light and forward bias to gain a deeper understanding of device operation physics. As a case study, we selected perovskite cells with a $SnO_2$-based electron-selective layer (ESL), which showed great potential for fabricating high-efficiency, hysteresis-free devices due to the deeper conduction band and higher electron mobility of $SnO_2$. The as-made device showed a main junction at the perovskite/spiro interface. After light soaking and applying forward bias, the junction quality improved, possibly explained by filling trap states at the interfaces and by the perovskite absorber perhaps having a self-poling effect; the main junction is observed at the ESL/perovskite interface. The results are consistent with current-voltage measurements, device performance improves mainly with fill factor enhancement. The operando KPFM results should more closely reflect the real case during current density-voltage measurements or solar cell operation. The operando KPFM technique that we have developed can be a powerful tool to provide a deeper understanding of the device operation mechanism and to further optimize the device.**

***Index Terms* — Perovskite, junction quality, operando KPFM, interface, fill factor enhancement.**

## I. Introduction

Perovskite solar cells have made remarkable progress to 24.2% efficiency in the past few years via efforts in material growth and in interface and device engineering [1]. Perovskite material has excellent optoelectronic properties and defect tolerance, which makes it relatively easy to deposit good-crystallinity materials and fabricate high-efficiency devices. Unlike other successful thin-film materials, perovskite is both highly and easily tunable, where a small variation or unintentional process could make the material weakly p-type, weakly n-type, or intrinsic. Even for similar device stacks, it is unclear whether perovskite forms a p-n junction, p-n junction-like, or p-i-n structure [2-3]. In addition, metastable perovskite reportedly may change under light or in operation [4-5]. A deeper understanding of the device operation mechanism is required to further optimize the device.

In this work, we developed operando Kelvin probe force microscopy (KPFM) to study the electrostatic potential distribution across perovskite cells. As a case study, we selected perovskite cells with a $SnO_2$-based electron-selective layer (ESL), which showed great potential for fabricating high-efficiency, hysteresis-free devices due to the deeper conduction band and higher electron mobility of $SnO_2$. From the as-made device, we observed a strong electric field peak at the perovskite/spiro interface. We applied light/bias voltage to the device and saw the electric field peak at ESL/perovskite interface become stronger, indicating the main junction switched to the front. The results should more closely reflect the real case during current density-voltage (I-V) measurements or solar cell operation; and provide more insights into studying device physics.

## II. Experiment Details

KPFM is an atomic force microscopy (AFM)-based technique that measures the electrostatic potential with a 30-nm spatial resolution and a 10-mV potential resolution [2]. Topographic and electrical images were collected simultaneously. Operando KPFM measures the same location on cross section of the perovskite solar cell, which allows direct imaging of the change of the electrical potential across the p-n junction in different conditions. We used a halogen lamp to do the light soaking through the glass substrate; the device was in short circuit. All measurements were performed in an Ar-filled glove box with water/oxygen content <0.1 ppm.

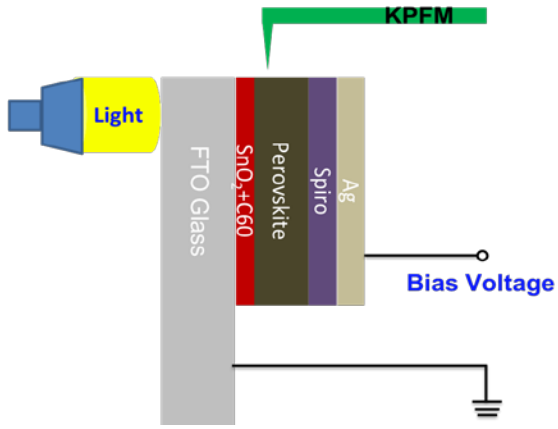


*Fig. 1. Illustration of operando KPFM work on perovskite devices.*

The perovskite devices were fabricated at the University of Toledo [6] then shipped to NREL for immediate characterization. We simply cleaved the devices to expose the cross section without further sample treatment (polishing, ion



This report is available at no cost from the National Renewable Energy Laboratory (NREL) at www.nrel.gov/publications.

milling). In the measurement, we find an area with a flat surface (< 50-nm variation) on the cross section to eliminate the topographic effect on surface potential, then quickly scan the KPFM signal under different bias voltage at -0.5 V and -1 V on the same area in dark condition. Scanning electron microscopy (SEM) was used to identify the different layers in the device and to align with AFM/KPFM images.

## III. Results and Discussion

To minimize the effect of small bias voltages on the device, we did fast KPFM scans while maintaining good data quality: the line profiles were averaged from 40 scan lines of the potential images; the bias voltages were applied on the order of 0, -0.5, -1, and then 0 V again to make sure the potential signal does not change during measurements, and the measurement under one bias voltage takes less than 1 minute. Potential profiles from different scans were aligned by AFM. The potential and electrical field profiles and its corresponding location in the SEM image are shown in Figure 2. We subtract the 0 V potential profile from the -0.5 V and -1 V potential profiles and get potential difference curves. We then take the first derivatives of the curves to calculate electrical field differences. On the as-made device, we observed significant voltage drops of the electric fields on both the ESL/perovskite and perovskite/spiro sides, but not in the middle of the perovskite layer—similar to what we reported previously [2].

The electrical current through both the ESL/perovskite and perovskite/spiro under a bias voltage must be the same, so the potential drops depend on the balance between the ESL/perovskite and perovskite/spiro interfaces. Here we observed a stronger peak at the perovskite/spiro interface; with such a device architecture, we were able to achieve high-performance devices with efficiency ~18% and a fill factor (FF) >70%. The good device performance suggests a junction at perovskite/spiro interface is sufficient for charge separation, as the carrier lifetime is long enough (~hundreds of nanoseconds) to diffuse to the back junction at perovskite/spiro interface. But to achieve higher performance, a main junction at the ESL/perovskite front interface is preferred. Because most of the short-wavelength photons are absorbed at the front, the generated electron-hole pair can be separated without transporting through the perovskite layer (when compare to a main junction at the perovskite/spiro interface).

Because the solar cell operates in forward bias under light, we scanned KPFM on the same area after different treatments to learn if the device behaves differently: light soaking for 30 minutes, leave in the dark for 2 hours, and apply forward bias at 0.5 V for 30 minutes. With the same data processing, we show the electrical field difference in Figure 3 to compare how the KPFM signal change with such treatments.

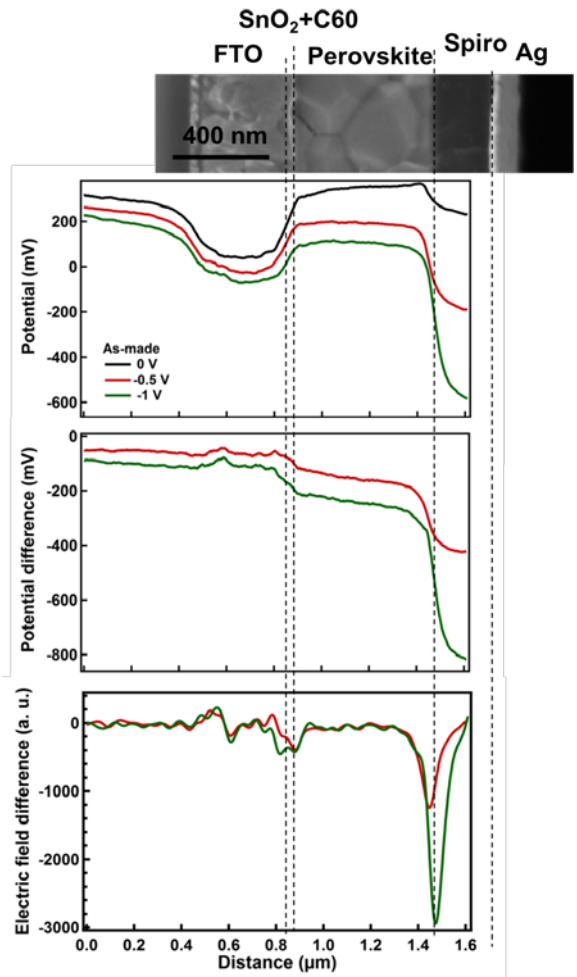


*Fig. 2 KPFM results of the as-made device.*

Table 1 lists the ratios of the two peak heights or electric field strength under reverse bias of -1 V to better quantify the signal change. The ESL/perovskite interface is noted as "Peak 1" and the perovskite/spiro interface as "Peak 2." We examine the electric field peak ratio under a reverse-bias voltage rather than under forward bias because the data under reverse bias are more reliable (Electric current under forward bias is relatively large, which generally leads to bad data quality, and the potential profiling is not stable for a time period during the measurement with a large current). The peak ratio from 0.14 at dark substantially increased to 1.33 after light soaking, which suggests that the ESL/perovskite interface may improves or both the ESL/perovskite and perovskite/spiro interfaces have better quality, but the front junction improves more. The light may fill the trap states at the interfaces, which leads to a reduced interface recombination rate. The better interface quality leads to the better FF of the device. Also, this could be a light-induced self-poling effect, where the light causes migration/drift of charged ions or vacancies in the perovskite layer, e.g., $CH_3NH_3$+ (MA+) and iodine vacancy [7].



This report is available at no cost from the National Renewable Energy Laboratory (NREL) at www.nrel.gov/publications.

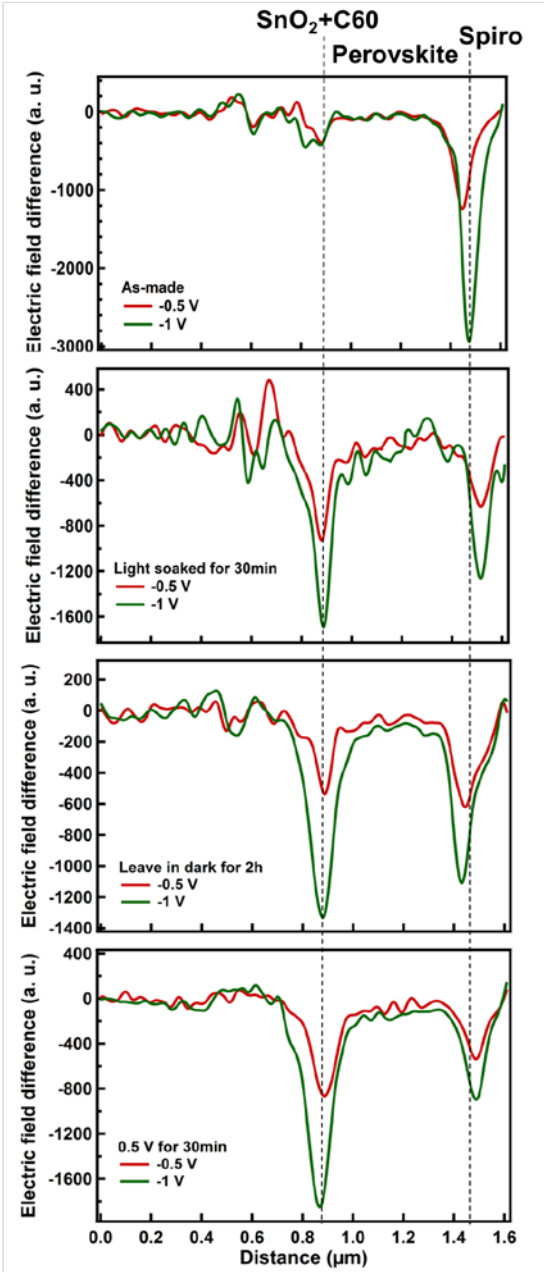


*Fig. 3 KPFM results of the device under different conditions.*

On the other hand, we noticed the electric field goes into perovskite layer, suggesting that the perovskite layer has a decreased carrier concentration after light soaking; the electric field is slightly higher than zero in the as-made dark condition, suggesting that the perovskite absorber is close to intrinsic material.

After leaving the sample in the dark for 2 more hours, the peak ratio only drops to 1.21, which indicates that the filled trap states have no significant change in a short time. Similar to the condition in operation, we put the device under forward bias of 0.5 V for 30 minutes, and the peak ratio continued to increase to 2.05, suggesting a stronger ESL/perovskite junction. This is possibly due to ion migration/drift discussed above. Detailed mechanism is under investigation. The conductance-voltage (C-V) characteristic of the light-soaking and forward biasing effect is needed for further analysis.

We treated another piece from the same batch following the treatments as we did for operando KPFM; the I-V parameters are also listed in Table 1 for a better comparison to KPFM results. These results are consistent with KPFM analysis: the larger the peak1/peak2 ratio, the better the front-junction quality, the better the FF. After light soaking and forward bias, I-V performance showed a similar trend. In reverse scan (from Voc to Jsc), the cell efficiency was 18.86%, with a Voc of ~1.1 V, a Jsc of ~21.9 mA/cm$^2$, and a FF of 77.3%. In the forward scan (from Jsc to Voc), the Voc and Jsc values are similar, whereas the FF decreased to 74.1%. Note that this may not exactly reflect the small peak ratio calculated in KPFM scans, because the light in I-V measurements could affect the device and makes it better. It is possible that the device has changed from the as-made to a better interface quality during the I-V measurement. After a 30-min light soak, the cell performance increased to 19.38%, mainly attributed to the improved FF. This is consistent to the trend of KPFM results. After being left in the dark for 2 hours, the cell has slightly decreased performance. And after applying forward bias of 0.5 V on the device for 30 min, the FF increased to 79.4% (reverse scan), making the device ~19.7%. The main parameter enhancement is FF, which supports the KPFM results.

*Table 1. Peak ratios of KPFM electric field at ESL/perovskite and perovskite/spiro interfaces and photovoltaic performance parameters of the device under different treatments. (PCE = power conversion efficiency, Voc = open-circuit voltage, Jsc = short-circuit current)*

| Condition | Peak1 intensity (a. u.) | Peak2 intensity (a. u.) | Peak1: Peak 2 ratio | J-V scan direction | PCE (%) | Voc (V) | Jsc (mA/cm$^2$) | FF (%) |
|---|---|---|---|---|---|---|---|---|
| As-made | 400 | 2,940 | 0.14 | Rev | 18.86 | 1.11 | 21.94 | 77.3 |
| | | | | Fwd | 17.73 | 1.09 | 21.94 | 74.1 |
| Light soaked 30 min | 1,690 | 1,270 | 1.33 | Rev | 19.38 | 1.12 | 21.92 | 78.9 |
| | | | | Fwd | 17.91 | 1.09 | 21.95 | 74.7 |
| Leave in dark for 2h | 1,330 | 1,100 | 1.21 | Rev | 19.34 | 1.13 | 21.90 | 78.4 |
| | | | | Fwd | 17.83 | 1.10 | 21.94 | 74.0 |
| Forward bias 0.5V, 30 min | 1,850 | 900 | 2.05 | Rev | 19.68 | 1.13 | 21.98 | 79.4 |
| | | | | Fwd | 18.35 | 1.10 | 21.93 | 75.9 |



This report is available at no cost from the National Renewable Energy Laboratory (NREL) at www.nrel.gov/publications.

## IV. Conclusion

We developed operando KPFM to study the potential profiles across perovskite cells under light and forward bias to gain a deeper understanding of device operation physics. The as-made device showed a main junction at the perovskite/spiro interface. After light soaking and applying forward bias, the junction quality improved, possibly explained by filling trap states at the interfaces and by the perovskite absorber perhaps having a self-poling effect; the main junction is observed at the ESL/perovskite interface. The results are consistent with I-V measurements, device performance improves mainly with FF enhancement. Our operando KPFM characterization can be a powerful tool to investigate more fundamental mechanisms in perovskite solar cell operation.

## References


[1] NREL efficiency chart.

[2] C. Xiao *et al.*, *ACS Appl. Mater. Interfaces*, 9(44) 38373–38380, Nov. 2017.

[3] Q. Jiang *et al.*, *Nat. Energy*, 2(1), nenergy 2016177, Nov. 2016.

[4] X. Deng *et al.*, *Nano Energy*, 46, 356–364, Apr. 2018.

[5] A. Pockett et al., *Phys. Chem. Chem. Phys.*, 19(8), 5959–5970, Feb. 2017.

[6] C. Wang *et al.*, *Adv. Energy Mater.*, 7(17), 1700414, 2017.

[7] Y. Deng et al., *Adv. Energy Mater.*, 5(20), 1500721, 2015.




This report is available at no cost from the National Renewable Energy Laboratory (NREL) at www.nrel.gov/publications.