Energy Systems Integration Facility

Attachment A
Statement of Work

Alliance for Sustainable Energy, LLC
Managing and Operating Contractor for the
National Renewable Energy Laboratory

Department of Energy Contract No. DE-AC36-08GO28308.

PART No. 1

- Introduction
- General
- Programming Requirements
- Performance Specifications
- Substantiation
- Design and Construction Procedures
- NREL Provided Information

Revision 1
October 26, 2009

Energy Systems Integration Facility

Attachment A
Statement of Work

Alliance for Sustainable Energy, LLC
Managing and Operating Contractor for the
National Renewable Energy Laboratory

Department of Energy Contract No. DE-AC36-08GO28308.

Revision 1

October 26, 2009

PART No. 1 – NREL Supplied Information
And
PART No. 2 – Subcontractor Supplied Information

1.0 INTRODUCTION

The National Renewable Energy Laboratory (NREL) is the nation's primary laboratory for renewable energy and energy efficiency research, development, demonstration, and deployment.

This section of the Request for Proposal (RFP) is intended to assist the Subcontractor to understand some unique attributes of work at NREL and identify areas of risk to the project.

Organization
Alliance for Sustainable Energy, LLC (Alliance) has entered into Contract No. DE-AC36-08GO28308 (hereinafter "Prime Contract") with the Department of Energy (hereinafter "DOE"), an agency of the U.S. Government (hereinafter "Government"), for the management and operation of the National Renewable Energy Laboratory (hereinafter "NREL").

The contractual relationships between DOE and the Alliance and the Alliance and the Subcontractor are as follows:

- The DOE and Alliance have entered into a Prime Contract for the management and operation of NREL, including facilities design and construction on the NREL site.
- Alliance and the Subcontractor will enter into a subcontract for the construction services outlined in this RFP. All references to "NREL" in the resultant subcontract shall mean the Alliance for Sustainable Energy, LLC.
- The Subcontractor will enter into lower-tier subcontracts for performance of any portion of the work outlined in this RFP that is not performed by the Subcontractor's own organization.
- For purposes of this RFP, the Statement of Work, and any resultant subcontract, the term Owner means the Alliance for Sustainable Energy, LLC, acting in its capacity as the managing and operating contractor for the National Renewable Energy Laboratory in furtherance of the performance of the work provided for under Department of Energy Contract No. DE-AC36-08GO28308.

Critical Decision Process
NREL will comply with DOE Order 413.3A "Program and Project Management for the Acquisition of Capital Assets" for this project. Integral to this order are the critical decision processes which are approval points that need to be satisfied before the project can proceed to the next phase. The Critical Decisions (CD) are summarized as follows (for detailed information refer to DOE Order 413.3A):

- **CD-0 Approve Mission Need**
  This decision point identifies a mission need but not a particular solution. The requirements of CD-0 for this project have been completed allowing NREL to proceed to the project definition stage.

- **CD-1 Approve Alternative Selection and Cost Range**
  This decision point marks the completion of the project definition stage and is characterized by completion of conceptual design. For this project the Subcontractor's proposal becomes the conceptual design and is used to support approval of Critical Decision 1. Approval of Critical Decision 1 documents are required before award of Phase I of this subcontract. NREL intends to obtain CD-1 approval in parallel with subcontract negotiations. The Subcontractor's proposal is the key component in that approval process.

- **CD-2 Approve Performance Baseline & CD-3 Approve Start of Construction**
  The CD-2 decision point marks the completion of preliminary design and the development of sufficient information to establish a Project Performance Baseline. The CD-3 decision point marks the completion

of design work and verification that the project is ready to begin construction and procurement of items related to constructing the facility. An external independent review team will review project documentation and validate that the project has met criteria to proceed following implementation of any corrective actions prior to proceeding with a Request for Approval of Critical Decision 2 and 3.

Under a Design-Build approach Critical Decisions 2 and 3 can be combined (e.g. CD 2/3) into one approval which is the strategy envisioned for this project. Approval of CD 2/3 is required prior to the award of Phase II of this subcontract. In order to ensure a smooth transition between Phase I (preliminary design) and Phase II (design development and construction) of this subcontract certain deliverables are required to support the CD 2/3 approval process. Accordingly, a milestone deliverable, "Preliminary Project Performance Baseline", is required 140 calendar days after notice to proceed for Phase I Preliminary Design of this subcontract and 84 calendar days prior to the end of Phase I Preliminary Design where the subcontractor shall submit the following:

1. 90% preliminary design and associated report for the entire project scope
2. Preliminary projected cost loaded schedule for design development and construction based on the 90% preliminary design.
3. Preliminary projected monthly cash flow curve for design development and construction based on the 90% preliminary design.
4. Preliminary cost estimate for design development and construction with methods and assumptions.
5. Preliminary risk register and risk management plan
6. Preliminary facility energy analysis documenting how the requirements of DOE O 430.2B "Departmental Energy, Renewable Energy and Transportation Management" will be met including a draft LEED checklist based on the 90% preliminary design.
7. Preliminary Commissioning Plan.
8. Preliminary Quality Assurance Plan.
9. Assumptions Document.

NREL will use this information, in conjunction with other required items developed internally, to obtain approval for Critical Decision 2/3 during the 84 calendar day period prior to the conclusion of Phase I of the subcontract. The deliverables cited above must be as complete as possible in order to obtain the required approvals within the 84 calendar day allotted time frame. The Subcontractor will continue to refine the preliminary design during the 84 calendar day after submittal of the Preliminary Project Performance Baseline but cannot proceed with final design or construction activities until CD 2/3 approval is obtained and Phase II of this subcontract is awarded.

- **CD-4 Project Completion**
  This decision point marks achievement of completion and transition of the facility to occupancy and operations. For this subcontract achievement of completion criteria is discussed in Section 4.

Two Phase Subcontract

The proposed subcontract will be a two phase subcontract, Phase I - Preliminary Design and Phase II - Design Development and Construction. The use of two phases is intended to mitigate risk for the responding design-build teams. As a risk management tool, Phase I will allow the Subcontractor to more fully develop the drawings and specifications before offering a final Firm Fixed Price for Phase II - Design Development and Construction.

The Subcontractor is encouraged to consider the amount of labor that will be required to truly manage the risk inherent in Phase I - Preliminary Design to result in the most accurate and successful determination of a firm fixed price for Phase II of the subcontract. Planning for an adequate amount of labor during Phase I will enhance the Subcontractor's performance during Phase I of the subcontract and provide a greater level of certainty for the firm fixed price for Phase II of the subcontract.

Based on past experience, NREL strongly suggests that the Subcontractor consider the following:

1. The General Contractor will want to consider providing at least the following full time positions: (i) a project executive; (ii) a project manager; (iii) two project engineers; (iv) one to three estimators; and (v) a procurement specialist and/or procurement specialist team for the equipment list finalization.
2. The Designer will want to consider providing at least 20 to 30 staff and an appropriate number of lower-tier specialty designers to fully staff the project for Phase I. This recommendation is based on the premise that complete and comprehensive documents are needed to guarantee the firm fixed price for Phase II of the subcontract. Specialty lower-tier subcontractors (e.g. MEP) may want to consider full time staff dedicated to resolving Phase I critical design problems for the High Performance Computing Data Center; Research Electrical Distribution Bus; Research Fuels; Energy Analysis; and other items unique to this project. The Designer may possibly consume 50% to 60% of the design budget in the Phase 1 performance period and may be able to lower the financial risk by pricing Phase I - Preliminary Design commensurate with the level of work required in Phase I to guarantee the firm fixed price for Phase II of the subcontract.

Energy Efiiciency in the High Performance Computing Data Center (HPCDC)
Energy efficiency is a primary NREL requirement to be applied in a cost effective manner in the planning and design of the Energy Systems Integration Facility (ESIF). The HPCDC is of particular interest, due to the inherently high energy use of this type of function. The power required for the IT equipment is anticipated to be 1 MW at initial build-out, with an ultimate power requirement of 10 MW. This power is released within the HPCDC as heat, which must be removed with Heating Ventilation, and Air Conditioning (HVAC) system requiring additional power. Power is also required for lighting and power distribution systems. Thus the HPCDC will be the largest single energy user for the entire NREL campus. It is NREL's intent to make the HPCDC a showcase of the best available technologies to demonstrate truly integrated energy efficient design. It is anticipated that the Subcontractor will propose the use of low energy cooling systems that take advantage of the semi-arid climate of the project site to minimize the HVAC system energy input, plus the use of heat recovery systems to "export" the HPCDC heat rejected by the HVAC system to areas outside the HPCDC, thus crediting the HPCDC with this "exported" energy.

NREL has determined that the ESIF will achieve LEED™ Gold Certification. To accomplish this the successful Subcontractor will need to show the energy efficiency in this facility. NREL's representative has pre-registered this project with United States Green Building Council (USGBC) and researched the Credit Interpretation Requests (CIR's) which may support the HPCDC energy use in achieving LEED™ Gold. See Section 9.5 for the LEED™ Credit Analysis and the LEED™ Checklist.

Research Electrical Distribution Bus
The Research Electrical Distribution Bus may be another area of risk. This type of system is a vision of the researchers who will be utilizing the lab and they believe it is possible to create, but systems of this size do not exist. There are sample concepts and sketches in the RFP Section 5 for the Subcontractor to evaluate. The Subcontractor will be required to utilize innovative engineering to create the vision and then prototype of this building feature. The Subcontractor will be evaluated on their ability to not only design and construct this feature but to have this vision successfully and safely commissioned as a part of the project. The Subcontractor will be fully responsible for the success of this item.

Research Equipment
NREL has an extensive list of research equipment (identified on the individual laboratory equipment list) that, in addition to the standard laboratory equipment, is required for the facility to fulfill its intended mission. The Subcontractor will be required to further develop this list after subcontract award within the constraint of the identified $18,000,000 allotment. The Subcontractor is required to purchase, install and commission this research equipment in addition to the other laboratory equipment as a part of the subcontract requirements. An area of risk involves the procurement and commissioning of research equipment which may have long lead items, may be

unique in construction and operation, and the NREL's desire to obtain the most recent models before substantial completion.

Model Code and Reference Standard Conflicts
On prior design-build projects at NREL, codes and reference standards have each been cited which occasionally resulted in a conflict regarding interpretation between the subcontractor and NREL (For example IBC vs. NFPA). NREL acknowledges this as an issue and has included a section within Section 8.2 Design Procedures to help identify and mitigate this risk early in the project.

Safety
This project offers unique challenges in many different areas including energy efficiency, fast tracking of the design and construction, and innovative and cutting edge research activities and equipment. Therefore it is essential that the design build team have a comprehensive and integrated approach to safety, which includes environmental protection and occupational safety and health, that considers not only the construction of the facility and but also safe occupancy and operation. NREL applies a risk-based approach that requires the mitigation of risk to the lowest reasonable level. To achieve this level of risk NREL begins with compliance with applicable codes and then assesses the residual risk. If residual risk is unacceptable, NREL applies additional controls until the acceptable level of risk is reached. Designing controls into the facility is preferred over administrative controls. Additionally, NREL's design objective from a fire protection and life safety standpoint is that of a "highly Protected Risk". This is discussed more thoroughly in Section 6, Item D4, Fire Protection. NREL has found that close collaboration between the research groups, facility design teams and the NREL EHS staff as early in the life of the project as possible leads to the most favorable results. Please see Section 8.7 Safety and Section 9.7 NREL Safety Plan for further safety requirements.

A. **Subcontract Award**

It is the intent of NREL to award one firm fixed price with award fee type subcontract under this solicitation. The proposed subcontract award will be in accordance with the Statement of Work to be delivered with a total maximum price of $97,814,000.00 (Ninety-Seven Million, Eight Hundred Fourteen Thousand Dollars and No Cents) which is comprised of the following and exclusive of any Award Fee incentive payment:

Design and Construction	$79,814,000.00
Research Equipment Allotment	$18,000,000.00

B. Disclaimer

NEITHER THE UNITED STATES; NOR THE DEPARTMENT OF ENERGY; NOR ALLIANCE FOR SUSTAINABLE ENERGY, LLC; NOR ANY OF THEIR CONTRACTORS, SUBCONTRACTORS, OR THEIR EMPLOYEES MAKE ANY WARRANTY, EXPRESS OR IMPLIED, OR ASSUME ANY LEGAL LIABILITY OR RESPONSIBILITY FOR THE ACCURACY, COMPLETENESS, OR USEFULNESS FOR ANY PURPOSE OF ANY OF THE TECHNICAL INFORMATION OR DATA ATTACHED OR OTHERWISE PROVIDED HEREIN AS REFERENCE MATERIAL.

C. Notice of Requirement for Affirmative Action to Ensure Equal Employment Opportunity for Construction (derived from FAR 52-222-23, Feb 1999)

1. The Subcontractor's attention is called to the Equal Opportunity clause in Section I of Appendix B-10 and the Affirmative Action Compliance Requirements for Construction clause in Section III of Appendix B-10.
2. The goals for minority and female participation, expressed in percentage terms for the Subcontractor's aggregate workforce in each trade on all construction work in the covered area, are as follows:

Goals for Minority Participation for Each Trade	Goals for Female Participation for Each Trade
6%	5%

These goals are applicable to all of the Subcontractor's construction work performed in the covered area. If the Subcontractor performs construction work in a geographical area located outside of the covered area, the Subcontractor shall apply the goals established for the geographical area where the work is actually performed. Goals are published periodically in the Federal Register in notice form, and these notices may be obtained from any Office of Federal Contract Compliance Programs office.

3. The Subcontractor's compliance with Executive Order 11246, as amended, and the regulations in 41 CFR 60-4 shall be based on: (1) its implementation of the Equal Opportunity clause, (2) specific affirmative action obligations required by the clause entitled "Affirmative Action Compliance Requirements for Construction," and (3) its efforts to meet the goals. The hours of minority and female employment and training must be substantially uniform throughout the length of the subcontract, and in each trade. The Subcontractor shall make a good faith effort to employ minorities and women evenly on each of its projects. The transfer of minority or female employees or trainees from Subcontractor to Subcontractor, or from project to project, for the sole purpose of meeting the Subcontractor's goals shall be a violation of the subcontract, Executive Order 11246, as amended, and the regulations in 41 CFR 60-4. Compliance with the goals will be measured against the total work hours performed.

4. The Subcontractor shall provide written notification to the Deputy Assistant Secretary for Federal Contract Compliance, U.S. Department of Labor, within ten (10) working days following award of any construction lower-tier subcontract in excess of $10,000 (at any tier) for construction work under the subcontract resulting from this solicitation. The notification shall list the --
   a. Name, address, and telephone number of the lower-tier subcontractor;
   b. Employer's identification number of the lower-tier subcontractor;
   c. Estimated dollar amount of the lower-tier subcontract;
   d. Estimated starting and completion dates of the lower-tier subcontract; and
   e. Geographical area in which the lower-tier subcontract is to be performed.
5. As used in this Notice, and in any subcontract resulting from this solicitation, the "covered area" is in Jefferson County, State of Colorado.

D. (Lower-Tier) Small Business Subcontracting Plan

Upon issuance of a Notice of Award, the Subcontractor shall provide a lower-tier subcontracting plan, within 30 calendar days after subcontract award that separately addresses lower-tier subcontracting with small business, small disadvantaged business, and women-owned small business concerns. If the Subcontractor is submitting an individual subcontract plan, the plan must separately address lower-tier subcontracting with small business, small disadvantaged business, and women-owned small business concerns, with a separate part for the basic subcontract and separate parts for each option (if any). The plan shall be included in and made a part of the resultant subcontract. The lower-tier subcontracting plan shall be negotiated within the time specified by the NREL Subcontract Administrator. Failure to submit and negotiate a lower-tier subcontracting plan shall make the Subcontractor ineligible for award of a subcontract. (See NREL website)

E. Capability to achieve an annualized Power Use Effectiveness (PUE) of 1.06 or lower and an annualized Energy Use Effectiveness (EUE)bof 0.9 or lower for the HPCDC.

Description: Energy Usage Effectiveness in the High Performance Computing Data Center. (EUE in the HPCDC)

1. Energy efficiency is a primary NREL requirement to be applied in a cost effective manner in the planning and design of the Energy Systems integration Facility (ESIF).
2. The High Performance Computing Data Center (HPCDC)is of particular interest, due to the inherently high energy use of this type of function. The power required for the IT equipment is anticipated to be 1 MW at initial build-out, with an ultimate power requirement of 10 MW. All this power is released within the HPCDC as heat, which must be removed with a Heating Ventilation, and Air Conditioning (HVAC) requiring additional power. Power is also required for lighting and power distribution systems. Thus the HPCDC will be the largest single energy user for the entire NREL campus. It is NREL's intent to make the HPCDC a showcase of the best available technologies to demonstrate truly integrated energy efficient design. It is anticipated that the Subcontractor will propose the use of low energy cooling systems that take advantage of the semi-arid climate of the project site to minimize the HVAC system energy input, plus the use of heat recovery systems to "export" the HPCDC heat rejected by the HVAC system to areas outside the HPCDC, thus crediting the HPCDC with this "exported" energy.
3. An industry standard metric for benchmarking different data centers is the Power Usage Effectiveness (PUE) which is:
   a. PUE = Total Facility Power/IT Equipment Power,
   b. Total Facility Power is defined as the power measured at the data center utility meter, i.e. the power dedicated solely to the datacenter, at ASHRAE 90.1 - 0.4% evaporation WB/MCDB and cooling DB/MCWB 1% conditions.
   c. The IT Equipment Power is defined as the equipment that is used to manage, process, store, or route data within the high performance computing center.

4. This metric has no method for capturing the effect of crediting the HPCDC "exported" energy. Thus, for the High Performance Computing Center, NREL has defined a unique term, Energy Usage Effectiveness (EUE) as follows:
    a. EUE = (Total High Performance Computing System Data Center Annual Energy - Total Annual Energy Recovered and Beneficially Used Outside the Data Center) / (Total IT Equipment Annual Energy).

As defined above NREL has established the following requirements and goals:

5. Required - Achieve a PUE of 1.06 or less.
6. Required - Achieve a EUE of 0.9 or less
7. Goal - Achieve a EUE of 0.6 or less

The components for the loads in the EUE Metric are defined as follows (incoming utility power is measured downstream of the 13.2kC/480V transformer):

8. Total IT Equipment Annual Energy:
    a. This includes the energy associated with all of the IT equipment, such as compute, storage, and network equipment, along with supplemental equipment such as switches, monitors, and workstations/laptops used to monitor or otherwise control the datacenter. Any energy consumed within the IT equipment racks such as ventilation fans integral to the servers or racks or task lighting is considered to be IT Equipment Energy.

9. Total High Performance Computing Data Center Annual Energy:
    a. This includes the IT Equipment Energy plus everything that supports the IT equipment such as power delivery components such as UPS, switch gear, generators, Power Distribution Units (PDUs), batteries, and distribution losses external to the IT equipment.
    b. HVAC system components such as chillers, computer room air conditioning units (CRACs), air handlers and fans external to the IT equipment and racks, pumps, and cooling towers.
    c. Other miscellaneous component loads such as high performance computing center lighting.
10. Total annual energy recovered and beneficially used outside the High Performance Computing Data Center.

    This includes the following categories:
    a. Heat recovered from the High Performance Computing Data Center used outside the envelope of the HPCDC, but within the ESIF building envelope, such as domestic water heating, building heating, or lab space process heating.
    b. Heat recovered from the High Performance Computer Data Center used outside the ESIF building envelope, but as part of the ESIF program such as snow melt, freeze protection, or stationary engine jacket warming.

Note – The following sections of the RFP have been deleted to compile this Statement of Work:

Section 2 – Instructions to Offerors (Pages 10 through 20)
Section 3 – Subcontract Requirements (Pages 21 through 51
Section 4 – RFP Submission Requirements (Pages 42 through 101)

Selected paragraphs from RFP Sections 2 and 4 have been included above. Section 3 has been replaced with the Subcontract Schedule. Subcontractor supplied information from Section 4 has now been relocated in Section 2 of this Statement of Work.

(In order to make it convenient for cross reference between this document and the RFP, the original page numbering sequence has been maintained as closely as possible while allowing for the addition of data from the RFP Amendments. The next page following this page is 102.

5.1 PROJECT BACKGROUND

The National Renewable Energy Laboratory (NREL) Energy Systems Integration Facility (ESIF) vision is to enable complex systems research and development that fully integrates the most advanced simulation, data analysis, engineering and evaluation techniques to transform the nation's energy infrastructure.

The ESIF will support research, engineering, design, testing and analysis of components and systems to enable economic, reliable integration of renewable electricity generation, fuel production, storage and building efficiency technologies with the U.S. fuels and electricity delivery infrastructures. The ESIF will include a state-of-the-art high performance computing data center that will support improved and expanded capabilities in modeling and simulation of renewable energy and energy efficient technologies. The data center will be designed to be a showcase for energy efficiency. It is NREL's intention to procure the computer equipment separately; however, infrastructure support, including power, cooling, UPS, etc. shall be included in the subcontract.

The ESIF will provide laboratory and research capabilities for a broad range of renewable energy generation, including: 1) Solar- interconnection, power electronics, building integration and system optimization, 2) Buildings- sensors and controls, systems integration, modeling and simulation, 3) Hydrogen- electrical interfaces, electrolyzers, storage, quality standards, fueling systems, fuel cell integration 4) Wind- models, generation and grid interaction, electrical grid analysis, 5) Vehicles- Grid connected plug in and vehicle to grid electrical integration, battery thermal management and power electronics, 6) Biofuels- generator sets and engines 7) Energy Storage- electrical, mechanical and thermal. Outdoor pads will accommodate the testing of large equipment and systems on the multi-megawatt scale.

To support this research, the ESIF will also provide offices and shared common spaces for a minimum of 200 constant staff. An average of 225 has been used for the purpose of square footage area analysis. Conference rooms, visualization centers, interaction areas and guest offices will facilitate collaboration between NREL's private, academic and public sector partners. Ideally, the ESIF will house up to 250 NREL staff that assist in optimizing human performance and enhance creativity.

This is a high visibility project of national scope that is also required to be a showcase of sustainable high-performance building design, which will demonstrate the integration of energy efficient technologies, showcase technological advances, and capture the industry's attention. The ESIF is required to incorporate the best in energy efficiency, environmental performance, and advanced controls using a "whole building" integrated design approach.

In support of the NREL's goal to demonstrate energy efficient buildings with lower impact on the natural environment, the facility is required to be a Leadership in Energy and Environmental Design (LEED™) Gold certified laboratory building as defined in the US Green Buildings Council LEED™ rating system. This will be the highest certified facility of its type with a high performance computing data center.

NREL is a leader in laboratory health and safety and continues to improve and enhance the work environment to ensure a safe and healthful workplace. In furtherance of this mission, the ESIF must incorporate the concepts of "inherently safe design", "fail-safe design", "defense in depth" and "highly protected risk", and be a model not only for good environmental stewardship but laboratory safety.

The ESIF will be located at NREL's South Table Mountain property in Golden, Colorado. The ESIF building and site design and construction shall be in accordance with the Proposed Action description, commitments, and mitigation measures identified in the DOE South Table Mountain Supplemental Site Wide Environmental Assessment (SWEA) and any resulting decision document. At the time of this RFP issuance, the SWEA for this project has not been issued for public comment. NREL anticipates approval prior to award **of phase II of this subcontract**.

Additional information regarding the SWEA will be issued in amendment to this RFP as it becomes available.

5.2 FACILITY OVERVIEW

5.2.1 BUILDING FOOTPRINT AND LOCATION

The building will be located on the east side of the National Renewable Energy Laboratory's South Table Mountain campus, refer to the drawing in Section 9.1 for site use boundary information for this project.

5.2.2 SITE INFORMATION & ACCESS

The current plan is to establish final site access via a new "East Loop" road as shown on the drawing in Section 9.1. The East Loop road will be constructed under a separate subcontract. Vehicular paving shall be provided by the ESIF Subcontractor as necessary from the East Loop roadway shown on the infrastructure plan, to access the loading dock, demonstration area and lab bays, handicapped parking, etc. as required by the program. General parking for the ESIF will be outside of the project site and is not in the subcontract, nor part of this scope of work. A new Conference and Education Center is planned as a separate project for the adjacent site to the south. Adjoining sidewalks to the existing visitor's center and adjacent buildings will be included in this subcontract. Refer to the infrastructure drawings in 9.3 for additional information.

Physical barriers are not required to keep vehicles which have been cleared for entrance to the campus from driving up to building areas that are paved, such as the loading dock. However, fencing shall be provided around all outdoor test areas, NREL equipment and flamable or hazardous areas outside the building.

For security purposes, an unobstructed space shall be provided around all sides of the building and outdoor test area, extending out at least 30 feet from the face of the building and/or outdoor test area. Within this space, the design shall ensure that visual obstructions do not allow for concealment of explosive devices 6" or greater in height. This does not preclude the placement of site furnishings or plantings around the building; it only requires that such devices would be observable by building occupants.

5.2.3 UTILITIES AND SEPARATE INFRASTRUCTURE PROJECT

There is a new infrastructure project (to be constructed under a separate contract) currently being designed for the South Table Mountain campus. This work will be completed in time for the ESIF Subcontractor to connect up to. Refer to the drawings in 9.3 for the location of current and future utility infrastructure, including power, water, sanitary sewer, chilled water, heating water, and telecom. The Subcontractor will be responsible for accessing and connecting to the existing site infrastructure for water, sewer, drainage, power, telecom, IT, heating and cooling loops.

5.2.4 SUSTAINABILITY

Sustainable design allows humanity's present generation to meet their needs without compromising future generations' ability to meet their needs. The design, construction, and operation of buildings to mitigate negative impacts on the natural environment, to improve the health and comfort of building occupants, and to reduce operating costs, will also improve the building's performance. The ESIF will incorporate strategies in each of five categories of sustainable design: Site, Water, Energy, Materials, and Indoor Environmental Quality in order to gain, at a minimum, a LEED Gold Certification from the U.S. Green Building Council. A Platinum Certification is considered highly desirable.

Site: The ESIF building is to be located in the area shown on the Site Use Plan in Section 9.1. Facilities will include secure bicycle racks and showering facilities to accommodate bicycle commuting. The landscape improvements around the ESIF will reduce or eliminate the usage of potable water for irrigation. Methods of reducing the quantity and improving the quality of storm water leaving the site will also be implemented. NREL will consider

using reflective surfaces on the roof and paved areas to reduce thermal heat islands, and options to reduce light pollution leaving the site to protect the night sky.

Water: The building will employ best practice standards for lab equipment and fixtures in the building. The project will implement options to reduce process water and fixture usage throughout the building.

Energy: The mechanical systems will reflect the latest NREL campus standards and the best practices found in both the LEED standards, and the Labs for the 21st Century (Labs 21) Environmental Performance Criteria. The building systems will include: evaporative cooling, high performance fume hoods, variable air volume fume hoods, heat recovery systems from the data center for low Energy Utilization Effectiveness (EUE), advanced direct digital control systems, process cooling systems for lab equipment and shut off methods for lights and plug loads. Photovoltaics and other renewable and distributed generation technologies will additionally contribute to the building power supply. Energy modeling will be required to demonstrate the achievement of energy efficiency goals. The Subcontractor will analyze the costs and benefits of each of the mechanical and electrical systems to determine what other systems shall be incorporated during the preliminary design phase.

Materials: NREL prefers materials having recycled content, and those that are harvested and manufactured locally, and are made from rapidly renewable resources. Materials will be considered on the basis of their contribution to indoor air quality, with preference given to those with zero or low chemical emissions to the air. NREL will require the Subcontractor and their lower-tier subcontractors to recycle waste materials from the construction process. The LEED guidelines for improving the indoor air quality of the building during and after construction shall be followed. The building design will accommodate recycling of glass, cardboard, metals, and plastic during both construction and occupancy.

Indoor Environmental Quality: The building will be designed and constructed with consideration to the health and productivity of the building occupants. Both offices and laboratories shall be positioned to allow for day lighting, (except for laboratories specified to be without daylight). It is desirable to have all areas that can accept day lighting be 100% daylight with electric lights off on a sunny day between the hours of 10:00 am and 2:00 pm. NREL will consider options to provide thermal comfort controls to building occupants and to monitor ventilation and carbon dioxide throughout the building. Airflow modeling and computational fluid dynamics engineering and analysis tools shall be used to verify the ventilation, safety, and comfort performance goals that are met for the facility.

5.2.5 ARCHITECTURE

Building Design
As a high profile facility of national importance, the architecture of the ESIF shall express leadership in the development of renewable and integrated energy systems. Sustainable building design strategies and technologies shall be artfully incorporated into this state-of-the-art high tech facility. This design will also include the integration of at least 100 kW photovoltaic system on the roof that can be used for research testing or tied to the electrical power grid when not needed for research.

The ESIF building itself is envisioned to be a living/working laboratory of the technological development which it houses. It shall be a national showcase of sustainable high performance building design, demonstrating the advances in renewable energy technology. The project shall include an outdoor showcase of technologies to be celebrated. Design consideration shall be given to the access, arrangement, and visual character of this area and its relationship to the building.

The building is anticipated to be two stories, but up to five stories is allowable on the site. Massing of the building will preserve neighbor views, frame adjacent open space and be articulated for appropriate scale with other buildings on the campus. The ESIF shall be thoughtfully integrated into the site with attention paid to solar orientation and views and may take an unconventional shape.

Exterior building materials shall be high quality, durable, no or low maintenance, weather resistant materials with colors and textures compatible with other facilities on campus, such as prefinished aluminum and exposed aggregate or precast concrete. Other cladding materials such as concrete masonry units, synthetic stucco, galvanized steel and wood are not acceptable. Pre-engineered metal building materials may be used only for roof top mechanical penthouses away from the perimeter edge of the building. "Residential" roof treatment and materials are also unacceptable. Drainage from the roof shall be internal double (redundant) system.

The main entry shall be easily identifiable from site entrances for approaching visitors. Approximately twenty (20) guests at a time will be touring the building and must be accommodated by the lobby, visualization centers, walkways, corridor widths, and viewing alcoves.

Interior Design

Interior environments shall be designed to enhance occupant creativity, productivity, general health and well-being. Interior configurations, furnishings and materials shall create an enjoyable, visually open, innovative workplace that promotes collaboration.

Building interiors shall express quality of permanence similar to the exterior and provide a graceful introduction for the public visitors and private partners as they conduct business with NREL.

Entrance
Vestibules shall be provided at primary entrances.

The entrance lobby shall be the security center of the building. The lobby shall be an extension of the exterior of the building, and point of transition to the interior spaces. The lobby shall have visibility and a high level of security, which warrants the highest degree of visual detail and finish. Both the lobby floor and walls shall be finished with durable materials. Floor materials shall be terrazzo, stone or porcelain tile. Carpet accents may be used in special locations, such as seating areas. Wall materials shall include combinations of gypsum board (with reveals), acoustic fabrics, textured acrylic coatings or other durable materials used at the exterior of the building. Ceilings shall be other than standard acoustical tiles. Since there will be people gathering and informed to start tours, the space will be appropriately treated for acoustics. The lobby area shall also incorporate natural daylight and be equipped with a "dashboard" LCD/Plasma monitor display and informational displays about facility energy efficiency and the research that is conducted in the ESIF.

Public corridors shall be a minimum of six (6) feet wide. The general image of public space in the building shall be maintained in these spaces. It is desirable to introduce natural light into corridors, through windows, transoms or borrowed lights. Corridors and passages to staff offices shall be a minimum of four (4) feet in width.

Ease of maintenance:
Ensure that all maintenance items for the building are accessible, including windows (interior and exterior) for cleaning and all light fixtures for lamp replacement. Limiting the number of different types of lamps is desirable. Roof areas requiring installations or maintenance of equipment shall have parapets or guardrails at roof edges. All roofs shall be equipped with accessible anchor points for personal fall arrest systems.

Placement of core elements and distances:
Electrical closets shall be located so that the area of coverage does not exceed 22,500 occupiable square feet and the lengths of the branch circuits do not exceed 150 feet. All dry type transformers shall be located in mechanical or electrical rooms and installed/isolated and soundproofed so as to operate quietly with no disturbance to human occupants. Telephone/communications closets shall be placed so that wiring runs do not exceed 225 feet.

Mechanical, telecom, elevator and electrical equipment rooms on occupied floors shall be constructed of slab-to-slab shaft wall or concrete block walls. The public side shall be finished to match public space. Mechanical room floors shall be sealed concrete. Vinyl composition tile with static dissipative tile is required in telecom rooms and walls shall be lined with ¾" fire rated plywood.

A centrally located custodial janitor closet of approximately 64 square feet shall be provide for each floor/wing, with a floor mop sink, splash guard, mop holder, shelving and storage.

It is preferable that the ceiling space shall be layered with a sprinkler and piping zone near the underside of the structure, with the HVAC duct zone in the middle, cable trays above lighting, and the lighting zone immediately above the ceiling. Locate all piping and conduits as close to structure as practical. Provide a 6 inch minimum clear space to allow the relocation of light fixtures. All fire sprinkler heads in the building shall be a recessed type and centered in all ceiling tiles. All ceiling mounted fixtures and devices shall be centered in the ceiling tiles.

Rest Rooms
Separate toilet facilities for men and women shall be provided in the building. Each toilet room shall have sufficient water closets enclosed with stall partitions and doors, urinals (in men's room), and hot (set in accordance with applicable building codes) and cold water. Water closets and urinals shall not be visible when the exterior door is open.

Each toilet room shall, at a minimum, contain the following equipment: a mirror above the lavatory, toilet partitions and grab bars, a toilet paper dispenser in each water closet stall, that will hold at least two rolls and allow easy, unrestricted dispensing; a coat hook in each water closet stall; at least one modern paper towel dispenser, wall mounted soap dispenser, and waste receptacle in each toilet room; a coin-operated sanitary napkin dispenser with a waste receptacle for each women's toilet room; ceramic tile, recycled glass tile, or comparable wainscot or full height finish, a disposable toilet seat cover dispenser for each stall; a ground fault interrupt-type convenience outlet located adjacent to the lavatory. A shelf shall be included in vicinity of the lavatory to hold notebooks or briefcases away from the sink.

Showers and Locker Rooms for each sex shall be provided in the facility for employees to change and shower. Each room shall provide two showers lockers for 20 people, clothes hooks, mirror and grab bars. A Quiet/Lactation Room shall be located near a rest room with sink, small refrigerator, 2 lockers and reclining chair.

Office Spaces
All offices shall be of systems furniture design, consistent with NREL furniture in other buildings currently under design and construction, such as the Research Support facility (see Section 9.10 for current office systems

approved for use). A minimum of 200 offices and maximum of 250 offices shall be provided within the ESIF, which includes a growth factor. It is anticipated that the offices spaces will be 100% occupied at move in.

Approximately 31% of the office spaces will be private offices at 120 SF per office (approximately 10'x12'). Wall panels shall be 78" tall and doors shall be provided. A ceiling system for the office shall not be provided. Nine of these offices will be for directors, laboratory program managers, and research fellows. These nine offices are the same size as other offices, but have the following upgrades: a fabric upgrade, added wood trim, and an enclosed huddle room to be located immediately adjacent to each of the nine of these offices. There shall be at least three additional huddle rooms located throughout the office area for the rest of the groups that will be in ESIF. The huddle room shall have a lid, and be sized to accommodate four to six people for conference calls, meetings, etc.

Approximately 69% of the office spaces will be cubical offices at 72 SF per office (approximately 8'x9'). Cubical wall heights shall be low with a modesty panel extending above the work surface. Cubicles will have no doors, nor ceiling. Of the 156 offices, 8 of the 72 sf spaces will be designated as "student" offices for a total of 16 students, whom shall occupy ½ of the standard cubicle office size.

No offices shall be located within a lab. GIS, ZEB and Visualization, Visual Analytics, and Telecommuting Testing Labs are anticipated to be located within the office area or adjacent to the office area. Offices for Metrology and Sensor Labs will be located in the office area, but in close proximity to these labs. The Metrology Laboratory administrators office should be near the entrance to the lab and the Intern cubicles in the office area for the PEC Lab should also be located near the PEC lab.

Secured Workstation Area: This room provides secure office space for staff analyzing data on the secure servers located in the secure data center. Provide seven 72-square foot workstations within a hard-walled room. Room shall be located in the HTSC Office Area, and adjacent to the education Multi-Media Lab/Secure Conference Room. Adjacency to Secure Data Center is not required. Provide a secure network connection to both rooms as well. The Secured Workstation Area shall have exterior windows, but visual access into the room shall be controlled. This room has unique security requirements and the room lighting shall have dimming capabilities. The design will provide space for a physical safe (about two-foot-square in plan and six feet high). Security measures will include a silent alarm, motion sensors above the lay-in ceiling, a key pad and keyed door lock, and a badge reader (inside the room). Room power shall have battery back-up. Visitors will not be permitted within the room.

Support Spaces:
Conference rooms shall be furnished with a smart board, white board, projector, flexible conference tables with built in receptacles for electricity, LAN and projector connectors, and chairs. No projector screens are needed, but large plain-white walls will be needed for projection. Each conference room shall be equipped with a minimum of 12 LAN connections. Additional Electrical outlets should be at 5ft. spacing along the walls. Acoustics in the conference rooms will reduce HVAC noise to a minimum and make the conference rooms conducive to talking at low volumes.

Huddle rooms with conference table and chairs shall be provided adjacent to Center Director, Research Fellow and Laboratory Program Manager Offices. Each huddle room shall be equipped with a minimum of 6 LAN connections. Additional Electrical outlets should be at 5ft. spacing along the walls. Acoustics in the huddle rooms will reduce HVAC noise to a minimum and make the conference rooms conducive to talking at low volumes. Huddle rooms will have a small table and 4 to 6 chairs.

Provide a single central lunch/break area with coffee bar, LCD/Plasma T.V., amplifier, speakers, a warming kitchen, including sink, disposal, dishwasher, refrigerator (w/ ice), tables, chairs (stackable for 120), paper towel and soap dispensers, waste and recycle bins. The lunch/break area shall provide space and power for vending machines by others. Coffee bar kitchenettes with bar sink, disposal, refrigerator, towel and soap dispensers shall

be located on other floors, remote from the main Break Room, but adjacent to Interaction Areas. NREL shall provide microwaves, toaster ovens, water dispensers for the break and coffee bar areas.

Copy centers will be located on each floor near offices in a dedicated room; so that copiers and printers are not decentralized throughout office space. These rooms will house recycle containers. Mail will also be distributed in these rooms, so shall be equipped with mail slots, scale and postage meter. Files are expected to be in individual work stations and in alcoves off circulation paths in the open office area.

A facilities management Control Room of 480 square feet shall be provided with three work cubicles of 72 sf each, plus a workstation for the Building Automation System and storage space for tools and spare parts of 240 sf. This room may be located near utility rooms or the loading dock.

A 2 bay (minimum) Loading Dock shall be provided with a dock leveler, bumpers, vehicle restraints and the ability to accommodate an 18 wheel semi-truck. This area shall have a concrete apron or ramp to allow vehicle access into the high bay areas. A Trash Enclosure capable of accommodating a 30 cubic yard roll-off dumpster for weekly pickup shall be located near the loading dock. A Recycling Center for the storage of seven (7) 96 gallon bins shall also be located near the dock. A freight elevator shall be located nearby if the building is more than one story.

100 lineal feet of book shelving shall be provided in the HTSC common area for a Center Library.

An enclosed equipment pallet storage area of 1250 sf shall be provided which is fork truck accessible and includes a 3 level high pallet rack for equipment and test article storage. The rack shall be compliant with RMI and ANSI standards and shall be designed for forklift use. This area does not need temperature or humidity controls. This storage area shall be adjacent to the loading dock area.

Office Space Equipment:
Under-floor air distribution is highly desirable and may be required in order to achieve the building sustainability goals. Lighting shall include both ambient lighting and task lighting for efficiency and individual control. Wireless computer access shall be provided throughout the building. Adjustable keyboard trays shall be provided for all work stations. Storage units with "flippers" are desirable for all workstations. All furniture, including cubicle furniture, chairs and tables shall be furnished and installed by the subcontractor, except the ergonomic office chairs, which shall be provided by NREL. Personal computers shall also be provided by NREL. Infrastructure supporting a voice over IP phone system is required. The facility shall be wired with state-of-the-art telecommunications technology for multi-media communications. Visualization centers shall be equipped with rear projection and digital walls for ease of presentation communication and understanding.

Viewing Alcoves
Along visitor tour routes, viewing alcoves shall be placed off main corridors to allow visitors to stop for a look into selected rooms through a glass window. Viewing alcoves shall also be equipped with 42" LCD/Plasma monitors for video demonstrations and slide shows. Locations shall include: the High Performance Computing Data Center, the High Bay Lab and Control Room, Power Electronics, Hydrogen Systems, Smart Grid and Outdoor Equipment.

Interaction Areas
Research science is a social activity that functions best with an architecture that supports both structured and informal interaction. It is important to establish places where people can meet congregate and exchange ideas. The conference rooms formally accommodate this need, while interaction areas placed strategically near circulation intersections, elevators and stairs, provide opportunities to meet and mingle with those both within and outside one's own research group. These collaboration spaces should be enclosed near offices and open near labs. They will be equipped with smart boards with projection capability, display area, lounge seating, movable tables and chairs for impromptu discussions.

Laboratories
The facility design will be based on a flexible model of laboratory design that is responsive to present needs, and capable of accommodating future demands. The building will foster interaction, team-based research and cross-disciplinary research, and will have the flexibility to accommodate changes in technology, infrastructure and research.

For the smaller analytical and wet labs, a standard lab module of 11 feet wide will afford the building with a flexible unit sized for a variety of uses, including a standard lab bench on each side of a center aisle. Common utilities and casework configurations can be supplied to each module. Research projects can expand and contracted as needed into occupying more or fewer modules. Lab modules shall be designed so that they may be converted to office use if needed.

Modular sized casework and flexible furnishings will allow research teams to alter their spaces according to changing needs. Aisles between the lab benches should measure at least 5' to permit a person to pass behind another who is working. This also conforms to the ADA guidelines. Tables may be preferable to standard base cabinets when a high level of flexibility is desired.

Many of the lab sections of this RFP include photos. These photos are provided to indicate the size and scale of the current facilities. They are not meant to indicate the desired construction materials or configurations required in the new facility.

Laboratory service corridors shall be a minimum of eight (8) feet in width and door height a minimum of eight (8) feet. A standard 9'-6" minimum clear ceiling height is recommended for most labs. This allows for enough space for the use of indirect light fixtures. Many of the lab environments will require ceilings to be higher to accommodate special equipment.

Electricity, data, laboratory gases, vacuum, and DI water can be serviced to the labs via utility chases, between benches or overhead service carriers with easy connect/disconnects. It is important that all lab services be accessible for alterations in the future. Labs shall also be designed for sustainability, energy efficiency (including EPA's Labs 21 criteria) and for optimizing natural light. Some labs will have special lighting requirements and may not need daylight. The ESIF has a special set of research buses for electricity, fuels and thermal systems specified later in this document.

5.2.6 EQUIPMENT REQUIREMENTS

Equipment lists have been provided for each laboratory. All of the individual pieces of research equipment are identified on the equipment lists. A "Y" in the research equipment allowance column on the equipment list indicates that the cost of that item is part of the Research Equipment Allotment (see Section 2 Item E). Only the items on the equipment lists with the "Y" designation in the allowance column will be paid for from the Research Equipment Allotment funding. A blank indicates that the item either exists or the cost of the item is to be included in the Design and Construction funding. Responsibility for the procurement (NREL or Subcontractor Procure) and installation (NREL or Subcontractor Install) is also indicated on the list; D-B for subcontractor and NREL or existing for owner. The allotment is for the procurement, purchase and delivery of the equipment. Installation and commissioning costs should be included in the Design and Construction funds.

Building and laboratory services such as the electrical systems, HVAC systems, control systems, water and piped gas systems, personal computer connectivity systems, Research Electrical Distribution Bus, Research Fuel Lines, Research Heating/Cooling Loops, etc. which are identified as required in this subcontract are not "equipment" listed on the equipment lists and are to be provided by the Design-Builder. Likewise, furnishings for the offices

and laboratories including shelving, benches, casework, sinks, desks, non-office chairs, etc. are not listed equipment and are to be provided by the Subcontractor.

NREL will provide and install the high performance computer and racks. The Subcontractor will provide the facility and utility support infrastructure to support the computing system. The computer vendor will be responsible for in-rack electrical installation.

The Subcontractor will not be responsible for furnishing personal computers. Personal computers are the responsibility of NREL to procure and install. Computers used to drive other equipment such as visualization centers, control rooms and research equipment shall be provided with the associated equipment and shall be provided by the Subcontractor in as much as the associated equipment is to be provided by the Subcontractor.

5.2.7 ENVIRONMENTAL HEALTH AND SAFETY

The ESIF can be separated into a minimum of three distinct hazard control areas with fire separations:

1. Laboratories
2. Offices
3. HPC Data Center

Laboratories may further require more than one control area to accommodate quantities of hazardous materials. Quantities above exempt amounts would push occupancy from the standard B to H-2 or H-3. As laboratory chemicals will generally be delivered to the facility on an as needed basis, bulk storage of hazardous lab chemicals is generally not required. See specific lab descriptions for exceptions.

As laboratory gas cylinders will generally be delivered to the facility on an as needed basis, central gas cylinder storage is generally not required in the building. See specific laboratory for individual gas cylinder requirements. The location of exterior bulk gas and liquid storage tanks are subject to NREL EHS Office approval. Offset distances (beyond the minimum required by code) shall be applied to minimize the impact on the facility and adjacent facilities and equipment.

The general lab areas should be adjacent and accessible to a service corridor. The service corridor shall have continuous access (there would be no need to pass through an egress corridor to deliver chemicals) to the delivery dock.

Pre-engineered or prepared openings for laboratories requiring wall pass-throughs to service areas or equipment improve laboratory flexibility and minimize future fire wall penetrations. Gaps between piping, tubes, wires, etc. can be filled with moldable fire brick to maintain the fire rating integrity of the wall.

The building shall be sprinklered throughout. Where possible, routing sprinkler lines in exterior walls will be avoided, and areas with a high concentration of electrical equipment, including the HPCDC, shall be sprinklered on pre-action system. The facility shall be equipped with a fire detection and alarm system with 100% coverage per NFPA-72. Areas of unique fire hazard, such as hydrogen, appropriate fire detection devices shall be employed.

All laboratories shall be equipped with fire extinguishers located adjacent to the exits at a minimum and as required by code with signs indicating their location. Extinguishers shall be specified based on the hazards and equipment present in each work area.

If incorporated into the facility proper the surge test room shall be constructed as a fire rated compartment with concrete walls. The walls shall be built to withstand a catastrophic component failure.

Flammable storage cabinets of non-combustible construction shall include self-closing doors and shall be grounded. Flammable and corrosive storage cabinets are required to be ventilated only if materials being stored are listed as irritants. Flammable gas storage cabinets shall additionally be supplied with a fire sprinkler head. Flammable and corrosive cabinets shall comply with NREL's Fire Protection Program.

The ESIF design and construction will incorporate the following fundamental hydrogen and flammable gas safety concepts:

- Due to the low energy needed to ignite hydrogen in air, major design emphasis must be placed on preventing a release, controlling ignition sources, detecting leaks early and ensuring proper ventilation.
- The design must include hydrogen compatible materials. Many hydrogen material problems involve welds or the use of an improper material, such as 400-series stainless steel for a pressure gauge bourdon

tube. The designer must be careful in selecting material based on property values reported in the literature due to the high variability of test and material conditions.

- All vessels, piping, fittings, vents, stacks, and other system components used in hydrogen service must be designed and installed to provide maximum protection to personnel and equipment and facilitate like operation through the facility's life cycle. Piping systems for hydrogen, including structural supports, must be designed based on the most severe condition of coincident pressure, temperature, and loading.
- Ignition sources must be eliminated or safely isolated and the designer can assume unforeseen and unlikely ignition sources could occur and design systems accordingly.
- The system design must ensure that detection occurs immediately and operating personnel are notified as appropriate if hydrogen leaks into the atmosphere or a hydrogen fire occurs.
- Ceilings shall be configured in a manner that to avoid the potential for accumulation of hydrogen or flammable gases.
- Preventative measures are controls (monitoring, automated shut offs, leak prevention etc,) are required.

Recycled waste and hazardous waste storage areas are to be provided.

5.2.8 OUTDOOR AREAS, OPEN SPACES AND LANDSCAPING

The main entrance to the building shall be conveniently located for pedestrian traffic from remote parking and other facilities. The entrance shall be clearly visible and distinctive. Approaches to the main entrance shall be lighted (per IESNA) and designed to direct the visitor to the entrance. The approach to the entrance shall be easily accessible for persons using a wheelchair. Both daytime and nighttime conditions shall be considered in the design. The entrance shall be accommodated with a trash receptacle and nearby enclosed bicycle storage.

Landscaping and hardscape shall accentuate the approach and lead visitors to the building entrance and shall be used to enhance an outdoor patio equipped with tables and chairs for 20 people to accommodate eating and mingling. Patio proximity to the main break room is desirable.

Irrigation: Only early irrigation for establishing plant materials is required. Low water use plant materials shall be utilized. Vegetation shall meet the Fire Protection Program requirements for defensible space.

Storm drainage management shall be designed to move water away from the building structure, preserve natural terrain, prevent erosion and minimize large quantities of surface water moved off-site. A 75 to 100 foot setback is desirable from established natural drainage lines; anything required within this limit shall be by special review by NREL. Use of sand filtration for run-off is discouraged, due to the potential of clogging.

Grading shall minimize steps and retaining walls; contours shall meet existing grades at contract limit lines in smooth flowing curves. The slope for landscape areas shall not be less than 1.5 percent and shall not exceed 1 foot rise per 3 feet run; slope for drives, parking and terrace areas shall not be less than 1.5 percent, or more than 4 percent.

Outdoor test areas will be installed as part of the laboratory research areas. These shall be designed to minimize impact of views. They shall also incorporate safety features, restrict physical access and provide walkways for pedestrian and fork lift access. Outdoor test areas shall incorporate sufficient width to allow vehicular traffic in select areas (such as hydrogen-fueled vehicle fueling).

Install a minimum of 100kW of photovoltaic panels on the roof of the facility with electrical connections to the research electrical distribution bus and normal building power.

5.2.9 UNIQUE OR SPECIAL FEATURES

5.2.9.1 Tours and Viewing Areas

The ESIF will have a large number of tours (typically 10-30 people at a time). The ESIF will be designed to accommodate tour groups but not impact research. This would include the use of windows in laboratory walls to see into labs without entering them. Also small alcoves with LCD/plasma monitors and windows in the halls that protrude into lab space will be useful. A tour route should be standardized for viewing the lab space. Display monitors may be used for videos, slide shows and "dashboarding" of energy generation and use information.

5.2.9.2 Electrical/Fuel/Thermal Research connections

A. **Research Electrical Distribution Bus**

1. **Mission:**

   The Research Electrical Distribution Bus (REDB) provides an electrical interconnection point for research experiments. The Subcontractor will be responsible for the bus duct and permanent laboratory devices.

2. **General Requirements:**

   The ESIF REDB is a specialized electrical distribution bus network which interconnects laboratories and experiments to test equipment. It is intended for research, development and testing to characterize the performance of integrated power systems and components using a variety of renewable energy and fossil fuel powered electric generators, coupled with appropriate loads and storage systems. Examples of renewable energy generators that will be used include PV arrays and simulated wind turbines. Fossil-fueled generators include internal combustion engines and natural gas micro turbines. The REDB also integrates connections between power electronic based grid simulators, electrical load banks, smart grid technology evaluation capabilities, and power electronic inverters and converters. The REDB design allows safe connection and disconnection of experiments and equipment connected to the REDB, and provides protection, monitoring and data acquisition capabilities.

3. **The ESIF Research Electrical Distribution Bus has several purposes:**

   a. Testing and characterization of industrial distributed power systems and components.
   b. Research and testing of innovative power systems, distributed generation components, control systems, and Smart Grid technologies.
   c. Development and validation of standards to support these industries.
   d. Development and testing of power electronics interfaces.
   e. Use and evaluation of common SCADA and electric components used in the electrical utility industry.
   f. Educational outreach and support to the PV, wind and distributed energy resource industries.

   To better communicate the required functions of the REDB, conceptual drawings are shown below in Figures 1 through 6. Figures 1 and 2 shows the conceptual one-line drawings of the AC and DC research buses. Figure 3 is a conceptual diagram of the 13.2 kV Micro Grid electrical distribution system (located in the Outdoor Test Area), and Figure 4 shows the possible Micro Grid test connections to the REDB. Figures 5 and 6 illustrate internal laboratory electrical bus and device connections for a typical ESIF laboratory (the Power Electronics Lab is shown as an example).

4. **Examples and Pictures:**

   Below are figures of examples of electrical bus duct currently available

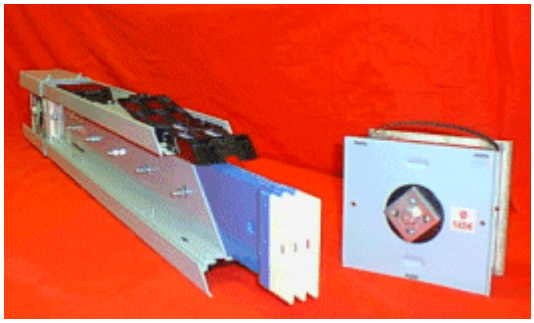

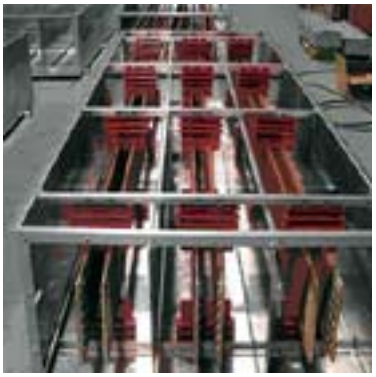

5. **Adjacencies and Other Room Connections:**
   a. The REDB must connect to the following labs: All Highbay Lab Area Energy Storage, Smart Grid Components Lab, Power Electronics Lab, Instrument Development Lab, Hydrogen Systems Lab, Fuel Cell Lab, High Voltage/ High Current Lab, Outdoor Test Area, and Roof Test Area.
   b. The Supervisory Control and Data Acquisition (SCADA) System for the REDB must be connected to computers located in the Highbay Control Room and Electrical Visualization Room.
6. **Flexibility Requirements:**
   a. REDB Architecture
      i. The REDB will be capable of connecting multiple sources of energy.
      ii. The REDB should provide for interconnection point spaced every 3 feet inside a laboratory. Typically 10 connection points per small laboratory.
      iii. The REDB will provide four independent AC bus ducts (each shall be 3 phase with full sized neutral and ground in order to test 100% unbalanced systems)
      iv. The REDB will provide four independent DC bus ducts
      v. Overhead ceiling, mezzanine or interstitial space options for running common services should be considered in the facility so as not to take up laboratory space.
      vi. Access to the connection points of the REDB stay away from dependence on ladders for access to utilities; mini-scissor lifts would be better.
      vii. Much of the research equipment is self-synchronizing. Existing generators have a self synchronizing package on them. Only the connection between the research bus and the utility will need to be able to be synchronized.

Figure 1: ESIF Research AC Bus One-Line Diagram

DOES NOT INCLUDE HOUSE POWER

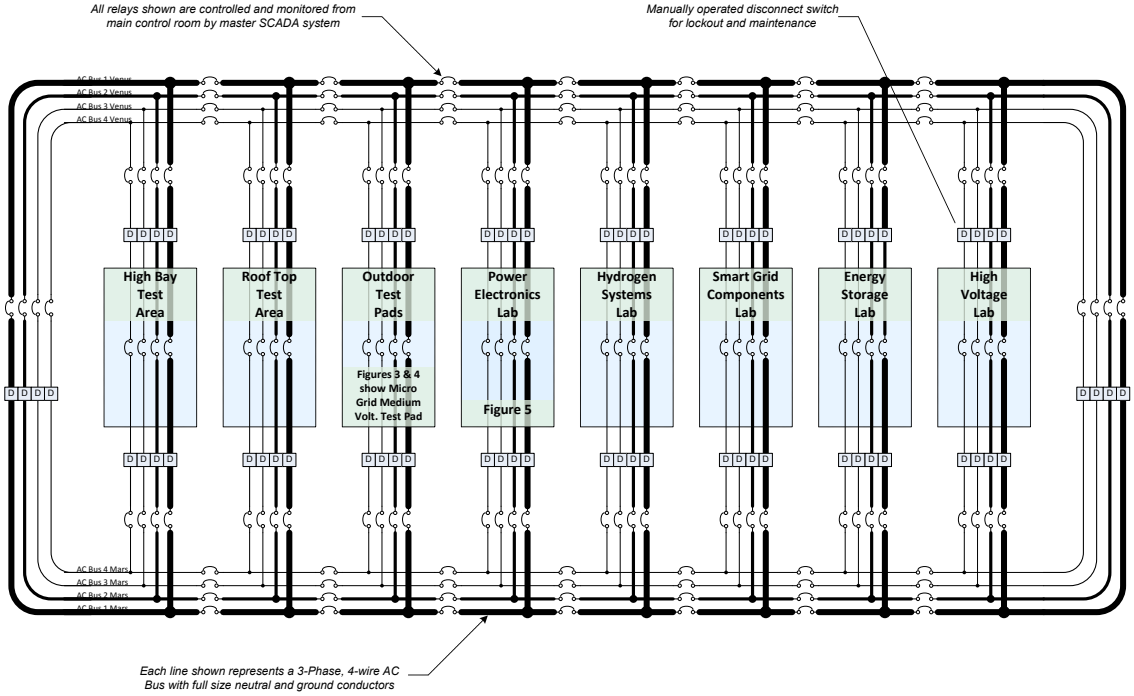

Figure 1: ESIF Research AC Bus One-Line Diagram

DOES NOT INCLUDE HOUSE POWER

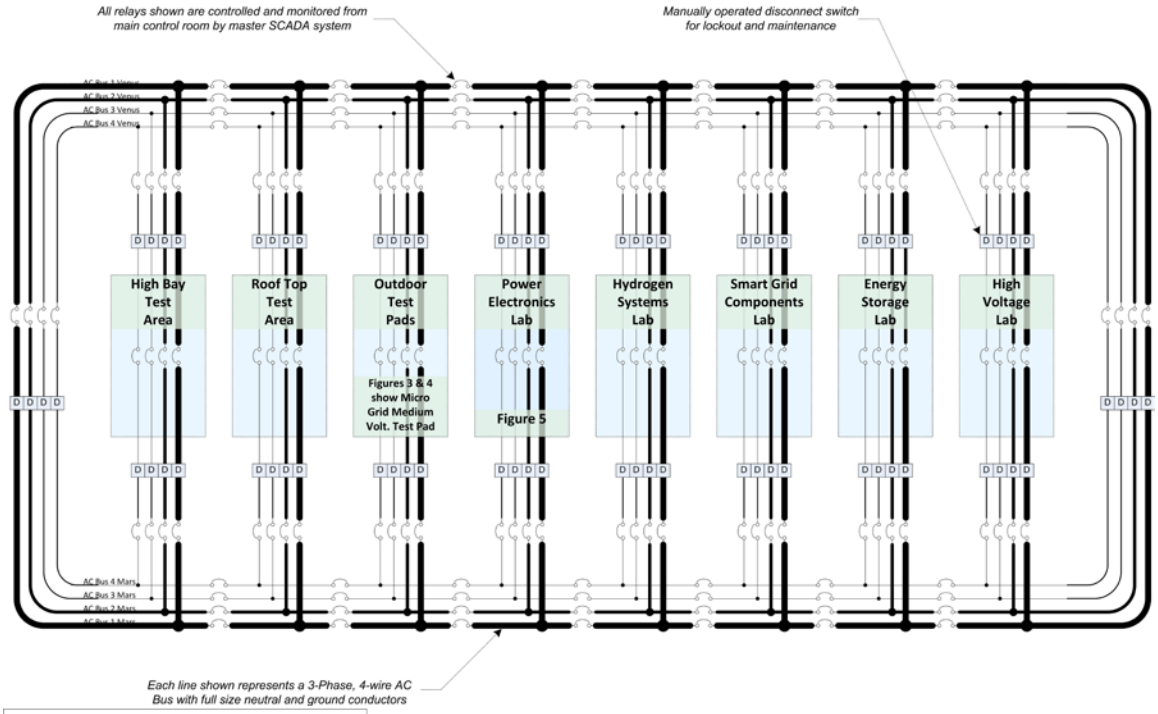

Figure 2: ESIF Research DC Bus One-Line Diagram

DOES NOT INCLUDE HOUSE POWER

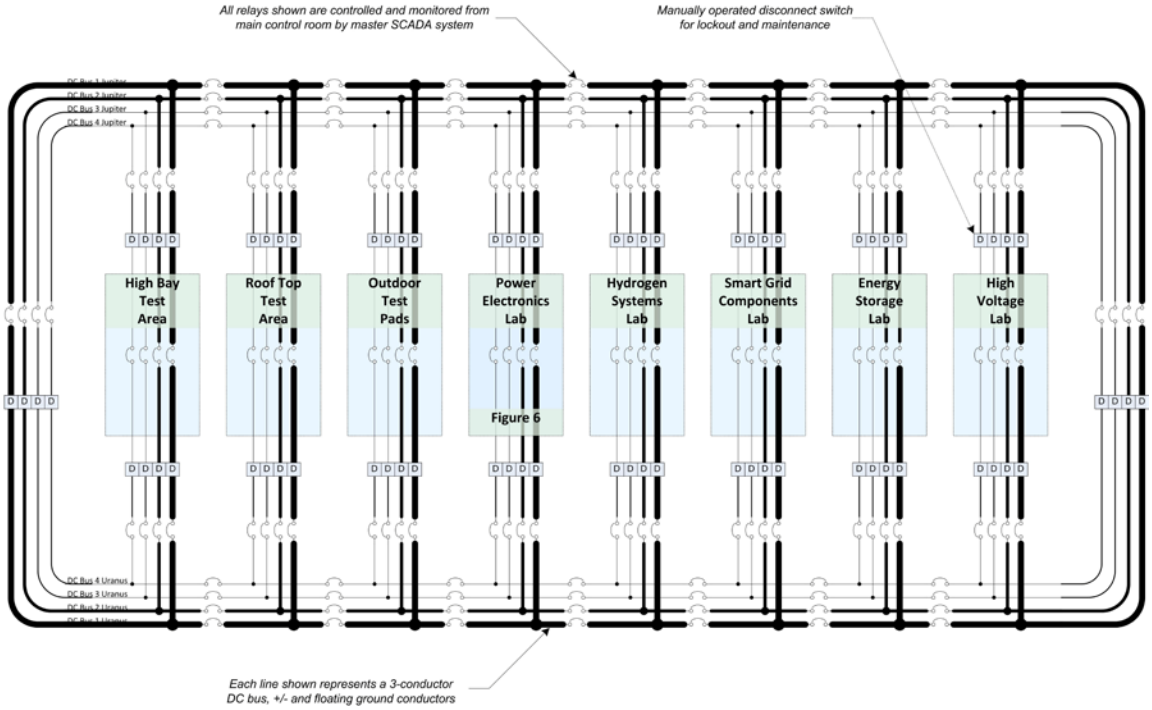

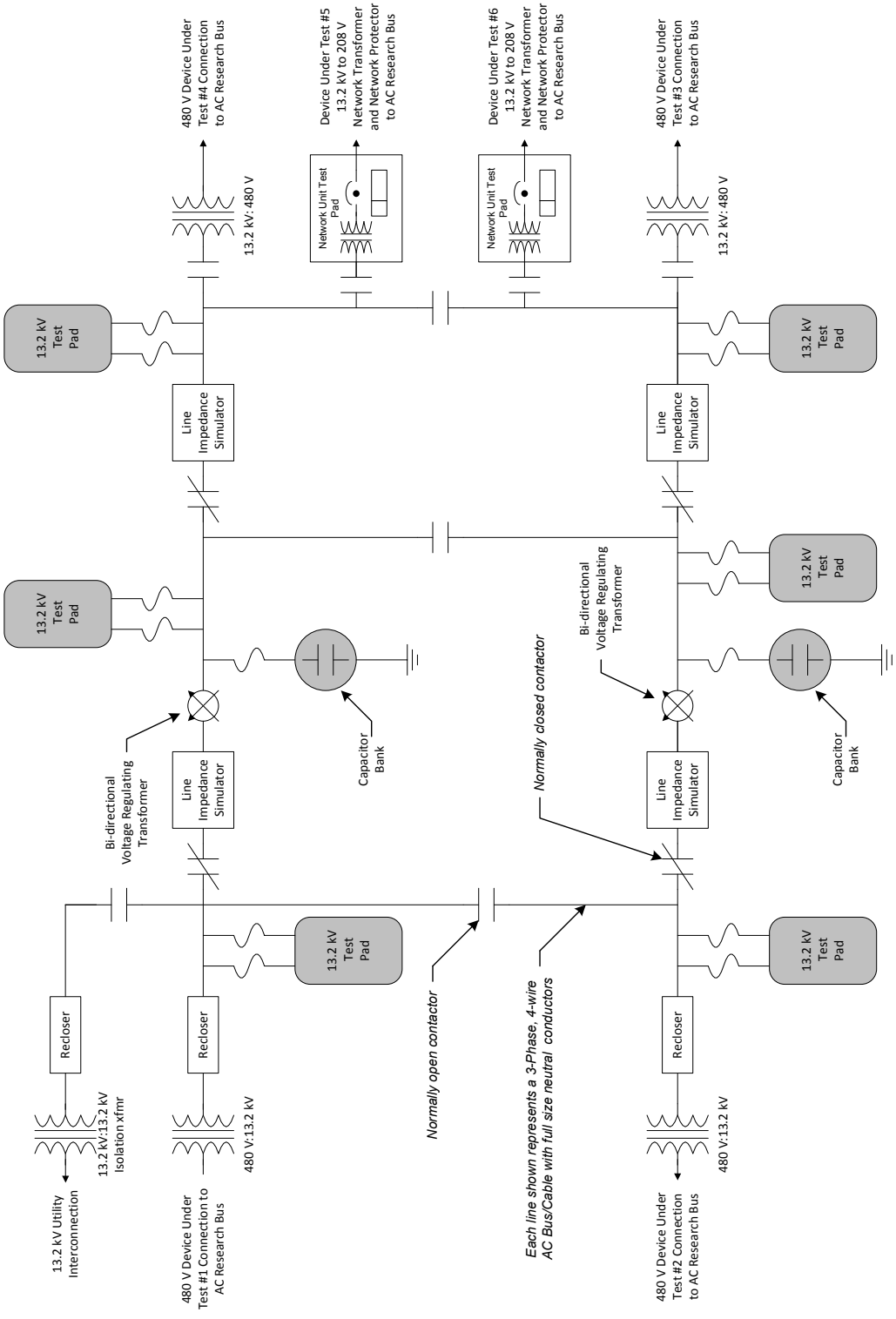

Figure 3: ESIF Micro Grid Test Area Schematic

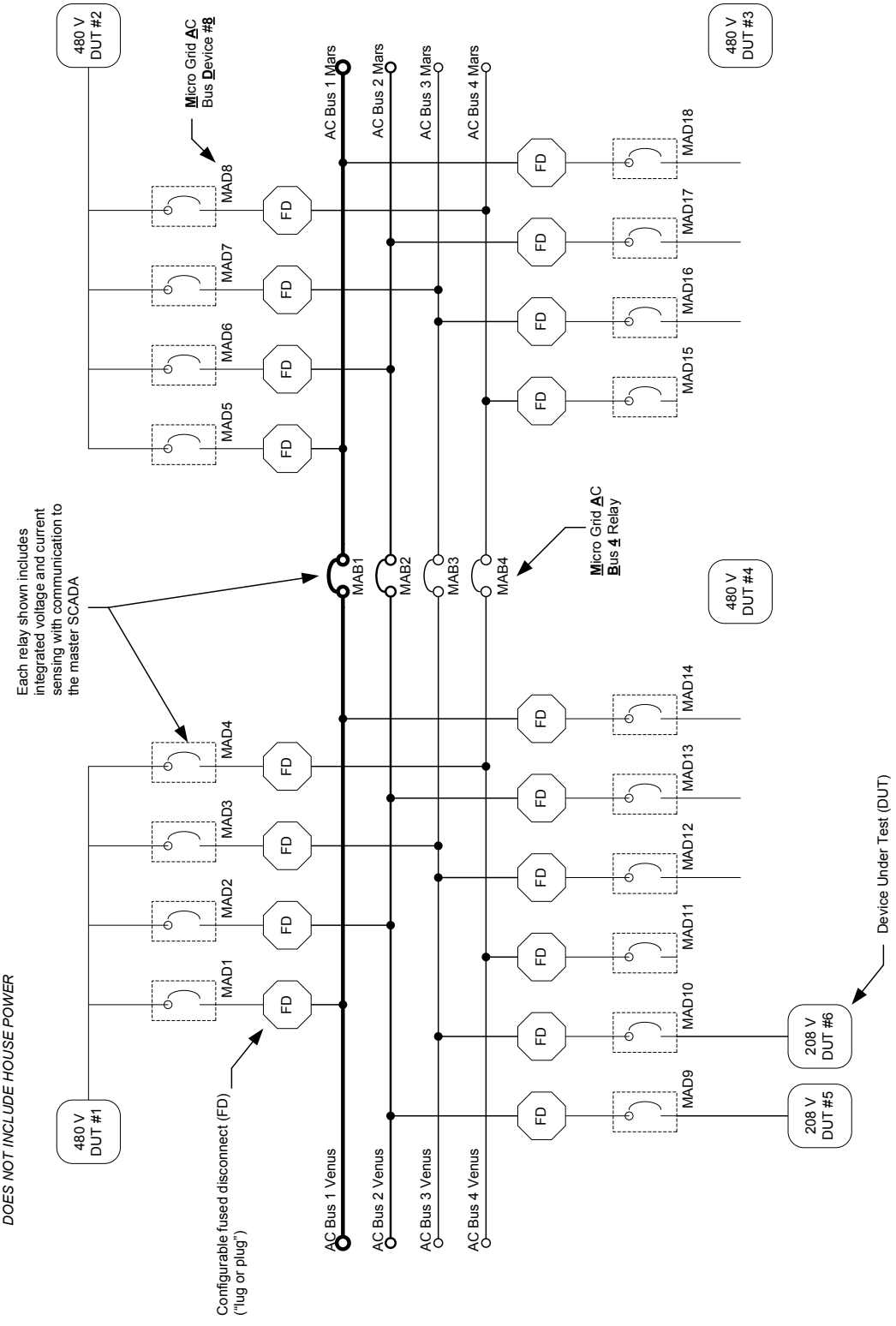

Figure 4: ESIF Micro Grid Test Area AC Bus One-Line Diagram

DOES NOT INCLUDE HOUSE POWER

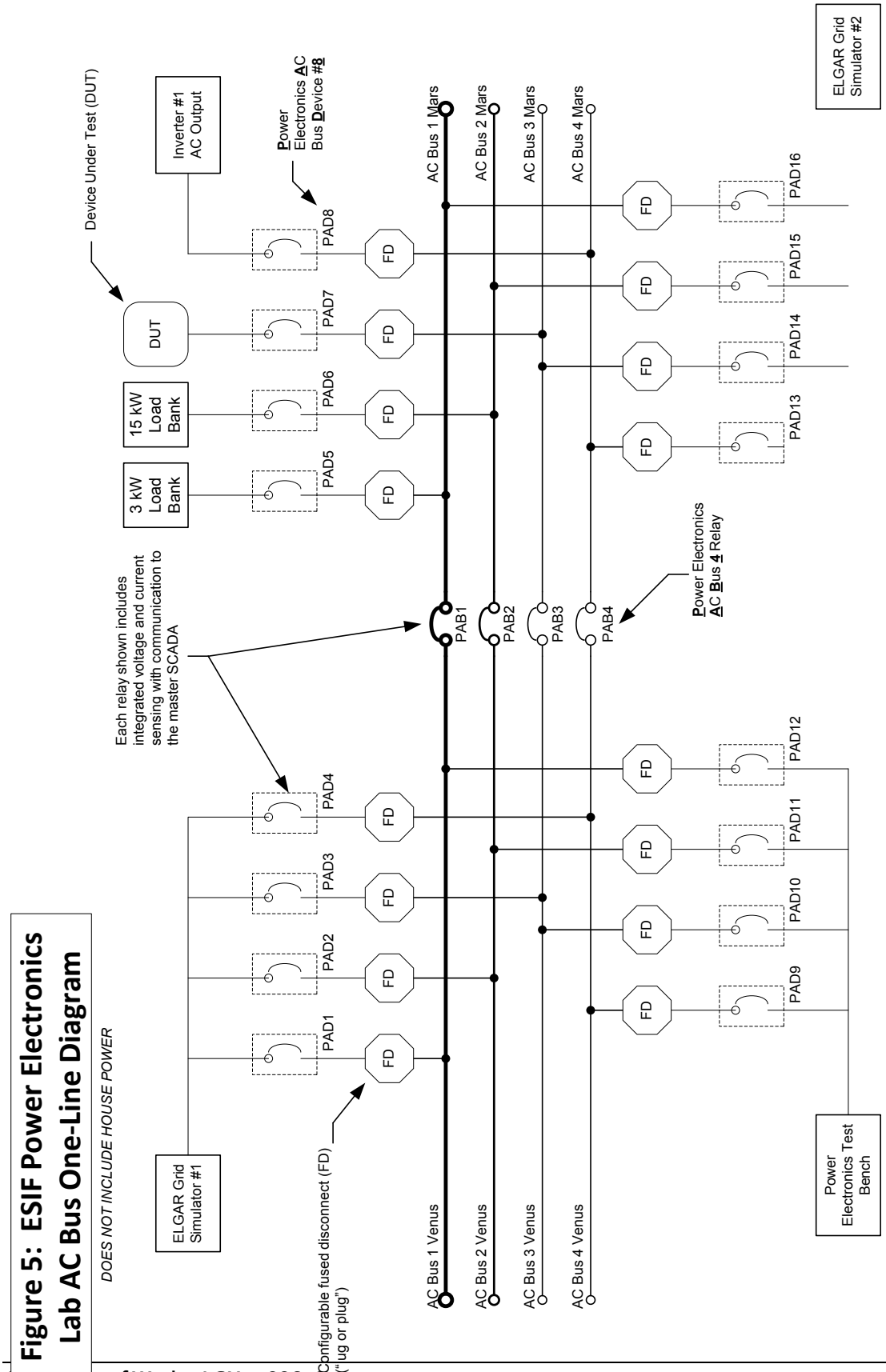

Figure 5: ESIF Power Electronics Lab AC Bus One-Line Diagram

DOES NOT INCLUDE HOUSE POWER

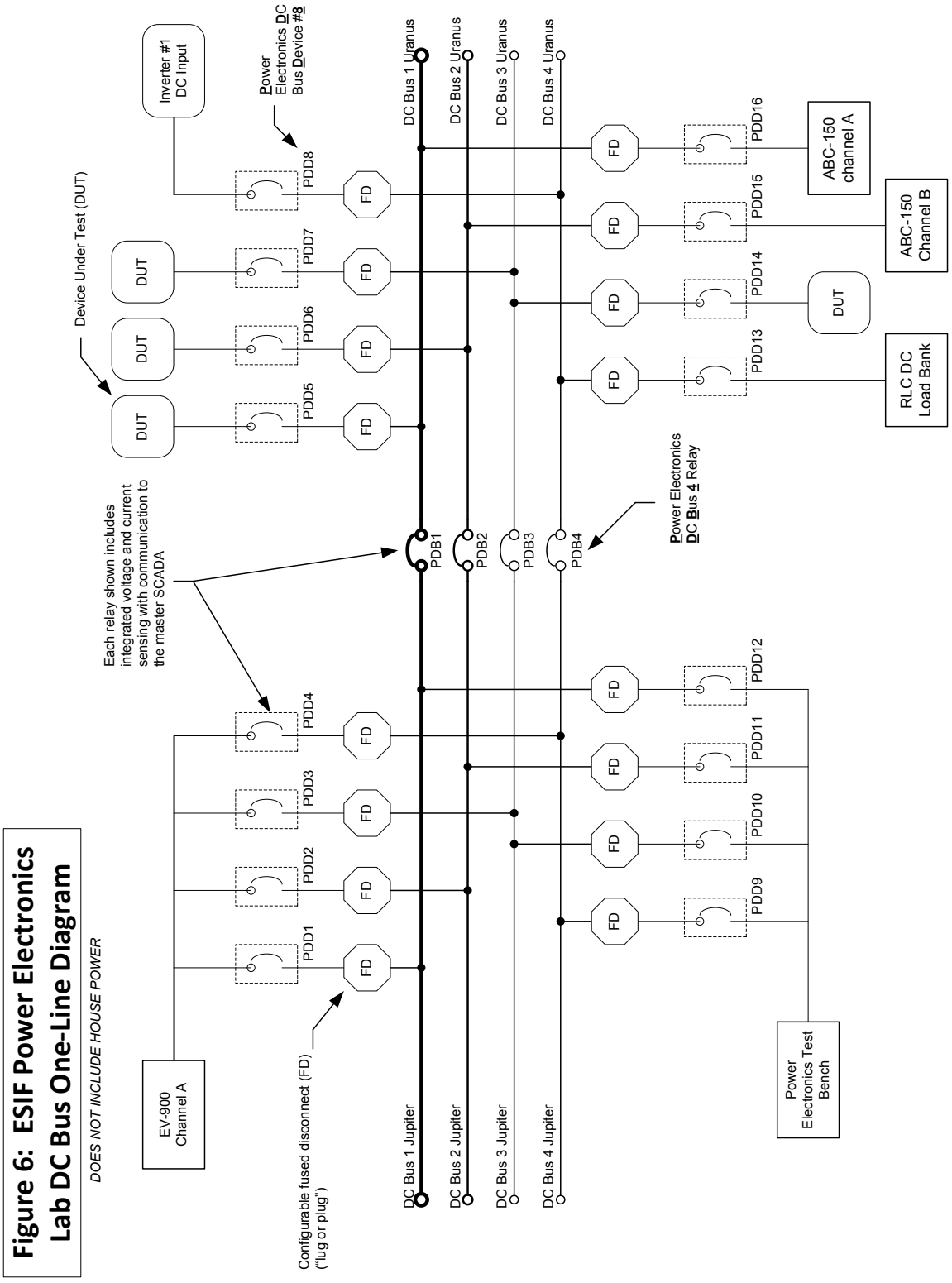

Figure 6: ESIF Power Electronics Lab DC Bus One-Line Diagram

DOES NOT INCLUDE HOUSE POWER

7. **Finishes and Materials:**
    a. Current carrying elements of the REDB shall be made from copper.
    b. An "off the shelf" Unistrut or 8020 framework could be used to support the bus work.
8. **Research Electrical Distribution Bus SCADA (Supervisory Control and Data Acquisition)**
    a. A centralized SCADA system would be located in the Highbay- Control room. This location would allow for switching of each controllable piece of the REDB, research utilities and provide supervisory data acquisition from nodes on the REDB. Schweitzer (SEL) or similar relay engineers that have designed complex SCADA controls for utilities could be of some help to this concept.
    b. In addition to the centralized control room, data from the SCADA shall be accessible in each lab to display current operating status of the REDB and other installed equipment.
    c. The centralized SCADA would also monitor lab use of electrical, water, gases and fuels to each lab.
9. **Activities:**
    a. This equipment would be used to facilitate experiments in the specific labs.
10. **Hazards include:**
    a. High voltage and current.
    b. Specific hazards include: shock, arc and arc blast.

B. **Research Fuel Lines**

1. **Mission:**

   The Research Fuel Lines (RFL) provides fuel to the various laboratories. Independent fuel lines for hydrogen gas, natural gas, diesel, and biodiesel will be provided.

2. **Conceptual Pictures:**

   Below are figures of examples of fuel lines currently in use at NREL

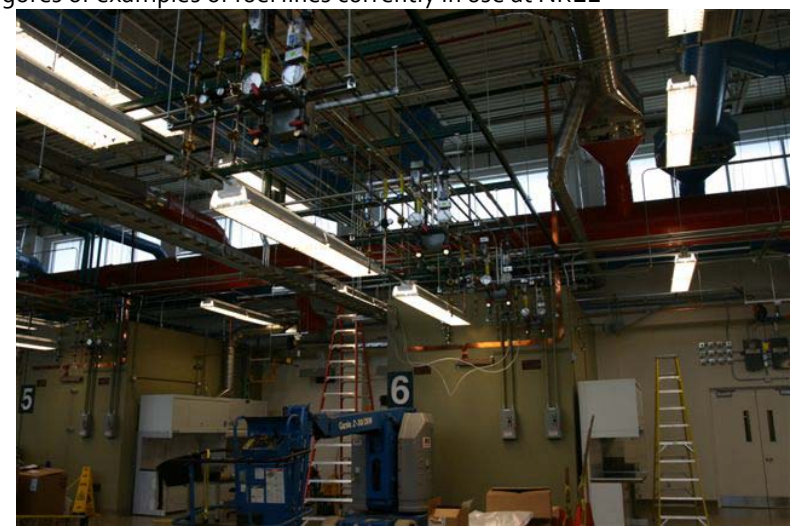

3. **Adjacencies and Other Room Connections::**

   a. The RFL must connect to the following labs: All Highbay Labs, Energy Storage, Hydrogen Systems Lab, Fuel Cell Lab, Power Electronics Lab, High Voltage/ High Current Lab, and Outdoor Test Area.
   b. The Supervisory Control and Data Acquisition (SCADA) System for the RFL must be connected to computers located in the Highbay Control Room and Electrical Visualization Room.

4. **Flexibility Requirements:**

   a. Overhead ceiling, mezzanine or interstitial space options for running common services should be considered.
   b. Some related labs might stack above others. Instrument Development and Power Electronics could go on a second floor.
   c. The RFL must be very flexible. The time spent for present experiment setup is greater than the testing itself. The design will provide easy connection from the RFL to experiments. Design of the RFL should stay away from dependence on ladders for access to utilities; mini-scissor lifts would be better.

5. **Finishes and Materials:**

   a. The fuel lines shall be of materials compatible with the fuel intended for distribution.
   b. The fuel lines shall be rated for the pressure of the intended fuel.
   c. The design shall include appropriate gauges, regulators, excess flow and shut off valves, containment and leak detection components .

6. **Fuel Locations:**

   a. Diesel and Biodiesel fuel will be supplied to the RFL. At least two 500 gal. Tanks will be placed on an outdoor test pad. Tank sizes to be verified after contract award with NREL researchers.

b. The fuel will be supplied to provide for a 1MW test articles located either on test areas or in the High Bay which are fueled by hydrogen gas, natural gas, diesel, or biodiesel.
c. Hydrogen will also be generated by the Hydrogen Systems Lab and is stored separately on an outdoor test pad.

7. **Hazards include:**

a. Flammable liquids and gases.
b. Flammable gases

C. Research Heating/Cooling Loops

1. Mission:

The Research Lines Heating/Cooling Loops (RHC) provides process heating and cooling to the various laboratories. Independent Research Chilled Water, Research Heating Water, and research interface to the building process cooling loop, campus chilled water system and campus heating water system will be provided.

2. Conceptual Pictures:

Below are figures of examples of research heating/cooling loops currently available

3. Adjacencies and Other Room Connections::

a. The RHC must connect to the following labs: Highbay-Main Lab, Energy Storage, Hydrogen Systems Lab, Power Electronics Lab, Fuel Cell Lab, High Voltage/ High Current Lab, and Outdoor Test Area.
b. The Supervisory Control and Data Acquisition (SCADA) System for the RFL must be connected to computers located in the Highbay Control Room and Electrical Visualization Room.

4. Flexibility Requirements:

a. Overhead ceiling, mezzanine or interstitial space options for running common services should be considered.
b. Some related labs might stack above others. Instrument Development and Power Electronics could go on a second floor.
c. The lab must be very flexible. The time spent in experiment setup is greater than the testing itself. Design of labs should stay away from dependence on ladders for access to utilities; mini-scissor lifts would be better.

5. Finishes and Materials:

a. The RHC piping systems shall be of materials compatible with the intended use.
b. The RHC piping systems shall be rated for the pressure of the intended use.

6. Equipment
   a. Provide a 750,000 Btu-hour input condensing type boiler with modulating gas valve with a minimum of 10 to 1 turn down. Provide necessary pumps, piping, controls and devices for a complete

operational system. Provide piping, valves and equipment pads to add one future like size boiler, pump and accessories.

b. Provide one 60-Ton nominal water-cooled chiller with four 15-Ton compressors and hot-gas bypass on one stage. Provide controllability to plus/minus 2 degrees C at all load conditions. Provide necessary pumps, piping, controls, and devices for a complete operational system. Provide piping, valves, and equipment pads to add one future like size chiller, pump, and accessories. The concentration of propylene glycol shall be sufficient to prevent freezing. The approximate amount is changed to 55%.

c. Both the chiller and boiler are part of the Research Equipment Allowance (note this applies to those individual pieces of equipment, not the distribution system). Note that installation and commissioning of this equipment, or any other research equipment, is not part of the allotment (see section 5.2.6).

TOTAL SPACE REQUIREMENTS

Program Grouping

The ESIF can be divided into the following broad categories of space, within which individual rooms of common type should generally be grouped together:

Large High Bay and Electronics Labs
Small Analytical & Wet Labs
Data Center
Office Space
Special Office Related Spaces

5.3.1 QUANTITATIVE ANALYSIS

Please reference information below.

Room Name	# of Rooms	Size (SF)	Total* (SF)	Comment
COLOR LEGEND:				
Office Space & Special Office Related Spaces				
Data Center				
Small Analytical & Wet Labs				
Large High Bay and Electronics Labs				
Outdoor Spaces				
Common & Support Area				
NET ASSIGNABLE BUILDING AREA				
Office and Support Space				
Lobby/Prefunction	1	400	400	SF±; *standing room for 20*
Central Break Room	1	1800	1,800	
Outdoor Patio	1	400		*excluded from building area*
Conference Rooms				
Conference Room	1	1,500	1,500	*100 person capacity*
Conference Room	1	500	500	*40 person capacity* *near highbay control room*
Conference Room	1	250	250	*20 person capacity*
Interaction Areas	TBD	TBD	540	*approximate total allowance*
Other Support Space				
Quiet Room	1	50	50	
Viewing Alcoves	TBD	TBD	400	*approximate total allowance*
Kitchenette	2	120	240	
Copy/Print/Mail/Storage	3	120	360	
File Alcoves	TBD	TBD	240	*approximate total allowance*
Office Spaces (200 - 250 total)				
Office (using 225 average)	69	120	8,280	*Private office: 78" system walls w/ door, 9 to be upgraded*
Huddle Space	12	100	1,200	*9 adjacent to upgraded offices*
Cubical (using 225 average)	156	72	11,232	*8 to be double workstations* *# cubicles based on ave req'd*
Facilities Management Control Room	1	480	480	
SUB-TOTAL			***27,472***	
Energy Analysis (EA)				
Visual Analytics Laboratory				
Visual Analytics Room	1	400	400	
Projector Room	1	250	250	±
Telecommuting Testing Laboratory	1	200	200	
GIS Lab				
GIS Lab - 1	1	400	400	
GIS Lab - 2	1	800	800	
SUB-TOTAL			***2,050***	

Room Name	# of Rooms	Size (SF)	Total* (SF)	Comment
Materials and Computational Sciences Center (MCSC)				
Insight Center				
Visualization Room	1	1,200	1,200	
Collaboration Room	1	800	800	
Projector Room	1	250	250	±
High Performance Computing Data Center	1	10,000	10,000	
Applied Battery and Electrochromatics Lab	1	3,000	3,000	
SUB-TOTAL			***15,250***	**±**
Center for Electricity, Resources and Building Systems (CERBS)				
Highbay Lab - Main Lab	1	10,000	10,000	
Commercial Building Highbay Lab:				
Commercial Building Highbay Lab	1	4,000	4,000	
Roof Testing Area (assoc. w/ Com. Bldg. Highbay Lab)	1	0	0	*See Outdoor Testing Area below for area requirements*
Outdoor Test Bed 2 (assoc. w/ Com. Bldg. Highbay Lab)	1	0	0	*See Outdoor Testing Area below for area requirements*
Highbay Lab - VSHOT	1	7,000	7,000	
Highbay - Control Room	1	800	800	
High Voltage/High Current Lab	1	2,000	2,000	
Power Electronics Lab	1	2,000	2,000	
Smart Grid Components Lab	1	1,500	1,500	
Instrument Development Lab	1	3,000	3,000	
Electrical Shop	1	0	0	*to be combined with Instrument Develop. Lab*
Hydrogen Systems Lab	1	5,000	5,000	
Outdoor Test Bed (assoc. w/ H2 Systems Lab)	1	0	0	*See Outdoor Testing Area below for area requirements*
Roof Testing Area	1	0	0	*See Outdoor Testing Area below for area requirements*
Machine Shop	1	1,500	1,500	
Energy Storage Lab	1	4,000	4,000	
Electrical Visualization	1	1,500	1,500	
ZEB Sim Lab	1	240	240	
Thermal Storage Materials Lab:				
Thermal Storage Materials Lab	1	1,000	1,000	
Thermal Storage Process & Components Lab	1	1,500	1,500	
SUB-TOTAL			***45,040***	

Room Name	# of Rooms	Size (SF)	Total* (SF)	Comment
Metrology Lab				
Electric Calibration Lab	1	750	750	
Shielded Room	1	250	250	
Optics Calibration Lab	1	600	600	
Equipment Staging Area	1	300	300	
Heat Sink (air lock)	1	50	50	
SUB-TOTAL			***1,950***	
Hydrogen Technologies and Systems Center (HT&SC)				
Manufacturing Lab	1	1,000	1,000	
MEA Lab	1	1,500	1,500	
Sensor Lab	1	1,000	1,000	
High Pressure Test Facility	1	500	500	*2 - 10'x10'x16' high - high pressure test cells*
PEC Lab	1	2,000	2,000	
Fuel Cell Lab	1	2,000	2,000	
Fuels Quality Lab	1	1,000	1,000	
Secure Data Center	1	600	600	*SF to be collocated within HPCDC Data Center*
Secure Workstation Area	7	72	504	*Collocated w/ HTSC Area*
Education/Multimedia/Secure Conference Room	1	400	400	*Collocated w/ HTSC*
SUB-TOTAL			***10,504***	
TOTAL MINIMUM NET Assignable Building Area			**102,266**	
Note: laboratory spaces to be within ± 10% of listed SF to sum the Total Net Building Assignable Area				
NET ASSIGNABLE OUTDOOR TESTING AREA				
Outdoor Test Bed (assoc. w/Commercial Building High Bay)	1	4,000	4,000	*associated w/ CERBS; 50% must have unobstructed solar access*
Outdoor Test Bed (480 V and 13.2 kV distributed energy test areas)	1	6,000	6,000	*associated w/ CERBS*
Outdoor Test Bed 2 (assoc. w/ H2 Production Lab)	1	3,000	3,000	*associated w/ CERBS*
Roof Testing Area	1	4,000	4,000	*associated w/ CERBS*
TOTAL MINIMUM NET Assignable Outdoor Testing Area			**17,000**	*± not included in building total*

Room Name	# of Rooms	Size (SF)	Total* (SF)	Comment
NON ASSIGNABLE BUILDING AREA (Common & Support Area)				
Restrooms	TBD	TBD	TBD	*as required by code*
Showers/Lockers	TBD	TBD	TBD	
Janitor Closets	TBD	64	TBD	*provide 1 per floor/lab area*
Maintenance Supply Storage	1	240	240	
Spill Kit Space	TBD	TBD	TBD	*1 per floor/lab area*
Primary Corridors/Local Passage	TBD	TBD	TBD	
Main/Exit Corridors	TBD	TBD	TBD	
Service Corridors	TBD	TBD	TBD	
Circulation Passages	TBD	TBD	TBD	
Stairs	TBD	TBD	TBD	
Elevators	TBD	TBD	TBD	*passenger & freight*
Utility Chases	TBD	TBD	TBD	
Utility Entrance(s)	TBD	TBD	TBD	
Mechanical	TBD	TBD	TBD	
Mechanical Rooms				*Including a minimum of 5,000 sf for HPCDC*
Mechanical Shafts				
Electrical Rooms	TBD	TBD	TBD	
Equipment Pallet Storage Area	1	1,250	1,250	
Telecom IT/IS Entry	1	TBD	TBD	
Telecom - MDF Room	1	TBD	TBD	*building security recording equipment to be collocated*
Telecom - IDF Rooms	TBD	TBD	TBD	
Loading and Receiving	TBD	TBD	TBD	
Trash Enclosure	TBD	TBD	TBD	*accommodate 30-yard roll-off dumpster*
Hazardous Waste Storage	1	144	144	*wide door & stor cabinets*
Recycling Center	TBD	TBD	TBD	*6 - 7, 96-gallon bins*
Columns & Wall Thicknesses	TBD	TBD	TBD	
TOTAL MINIMUM NON Assignable Building Area			**51,133**	
******Note: Provide a minimum area equal to 50% of the Total NET Building Assignable Area for Total Non Assignable Building Area.***				
TOTAL MINIMUM Building Area			**153,399**	

5.3.2 NREL RESEARCH CENTERS

5.3.2.1 ENERGY ANALYSIS (EA)

A. Visual Analytics Laboratory

1. Mission/Function:

Collaborative Workspace: This lab would support teams of up to eight people involved in visualization-intensive collaboration. Spaces like this tend to get high use and increase productivity. Typically, the users review source code, visually debug simulation and analysis output, and jointly edit documents. This workspace shall be designed to allow staff to dynamically self-organize and allow work to occur in parallel in the same visualization space. The space shall be utilized for the following functions:

Visualization Laboratory: This lab would support state-of-the-art visualization R&D. Such a facility could be essential for specialized projects.

Videoconferencing & Telecommuting: This is also a "greener" alternative to travel. It would be tied into the DOE Telepresence network, NSF Access Grid, conference, and commercial videoconferencing networks

Presentations to VIPs: Spaces specifically designed for VIP use tend to be underutilized and costly. Typically, it is best to design a space for team use, but make allowances for presentations to VIPs as a secondary function.

2. General:

a. 400 SF – single room (working area) with rear projection screen
b. This is a working room to collaboratively analyze data/project, and not be designed as a lecture hall
c. Will be used by several teams each for multiple weekly meetings.
   i. Typical use: 6 – 8 people
   ii. Maximum use: 12 people
d. Rear-projection display (minimizes this, but typically requires 13' between screen and rear wall)
e. Provide equipment area (room) behind the screen (PC cluster: 2-node cluster)
f. 8' high by 12' wide "powerwall" display.
g. Provide connection for at least 6 laptops; 6 people controlling; 6 areas on the screen
h. Provide simultaneous connectivity to multiple users' laptop computers.
i. Support operating systems including: Windows, Mac, and Linux
j. Immersive (three dimensional) capabilities are not required.

3. Rooms and Adjacencies:

a. Many users will come from Research Support Facility (the RSF) so users would prefer a location close to the main entrance of ESIF.
b. Access door to equipment room from within the room is desirable

4. Finishes:

a. Typical conference room finishes.
b. Typical use: 6 – 8 people
c. Maximum use: 12 people

5. Laboratory Requirements:

Door: 3'-0" min. width door: with window in the door or a sidelight.

a. Furniture:
   i. Conference tables that with flexible configurations: typical "U" shape configuration
   ii. Comfortable conference room chairs

iii. Two (2) 8' tall storage cabinets

b. Utilities:
See specifications for rear projection screen

c. Mechanical/Electrical:
i. Provide normal environmental temperature and humidity controls/ranges
ii. Operation will be during standard business hours
iii. Provide additional cooling for projection equipment
iv. Provide availability of power outlets, Ethernet connections, wireless, etc.
v. Cameras & videoconferencing.
vi. Provide high speed LAN connection to RSF.
vii. Provide high speed LAN connection to ESIF data center.

6. Equipment List:

-Energy Analysis Equipment List-	Item Name	Make & Model	Size & Weight	Mechanical	Electrical	Ventilation	NREL or D-B Procure	NREL or D-B Install	Research Equip. Allowance	Notes
EA - Visual Analytics Laboratory										
1	Rear-projection display	Mechdyne: Hi-PowerWall					D-B	D-B	Y	typically requires 13' between screen and rear wall
1	screen	Mechdyne: Hi-PowerWall	12' w x 8' h				D-B	D-B	Y	Resolution 4000 x 2000 pixels
1	Two-node PC cluster	Mechdyne: Hi-PowerWall					D-B	D-B	Y	high quality NVIDIA graphics cards driving projector
1	Audio/video teleconferencing peripherals	Mechdyne: Hi-PowerWall					D-B	D-B	Y	
6	Cabling and connection ports for multiple users to drive the projection system (video and mouse input) simultaneously	Mechdyne: Hi-PowerWall							Y	
1	Control panel for projection system	Mechdyne: Hi-PowerWall					D-B	D-B	Y	
1	Software for operating items in lines 3-9 above, as part of an integrated, installed system.	Mechdyne: Hi-PowerWall					D-B	D-B	Y	
2	White Boards		8'w x 4'h				D-B	D-B		
*	Flexible Conference Tables			-	110V	-	D-B	D-B		*provide for 8 people power for 8 laptops
12	Conference chairs			-	-	-	D-B	D-B		
EA - Visual Analytics Laboratory: Projection Room										
1	Projector	Mechdyne: Hi-PowerWall					D-B	D-B	Y	brightness ~5000+ lumens Monoscopic Up to 12 multiple windows -display controls -associated cabling and connection ports -for tiling multiple inputs (PC, Mac, Linux, video, etc.) Touch panel control

B. Telecommuting Testing Laboratory

1. Mission:

These areas shall serve as a test environment where NREL staff can try out various configurations of telecommuting hardware and software (probably for one week at a time) in order to determine optimal configurations for off-site use.

The area shall be designed as a test environment where NREL staff, especially managers, can try out various configurations of telecommuting hardware and software in order to determine optimal configurations for on-site offices and work areas that will be used to communicate with multiple off-site telecommuters (peers and/or managers).

Provisions shall be made to allow power consumption of telecommuting equipment configurations to be measured under real-life usage scenarios.

NOTE: The mission of the lab may be able to qualify as a LEED innovation point.

2. General:

a. 200 SF: area approximating a home office or NREL office, and a test area for measurement equipment.

3. Rooms and Adjacencies:

a. Located within ESIF near RSF

4. Finishes:

Typical office room finishes.

5. Room Requirements:

a. Doors: 3'-0" min. width door: with window in the door or a sidelight.
b. Furniture:
   i. One (1) workstation for storing and analyzing the data collected by the measurement equipment.
   ii. One (1) workstation simulating a home office or NREL office.
   iii. One (1) 8' tall storage cabinet
c. Mechanical/Electrical:
   i. Provide normal temperature and humidity controls/ranges
   ii. Operation during standard business hours
   iii. Provide additional cooling for additional computer equipment
   iv. Provide electrical power and data for computer station.
   v. Provide ethernet and (perhaps simulated) wireless networks separate from the rest of the ESIF.
   vi. Simple control must be provided to select the bandwidth and quality of these networks so that various network configurations (modem, DSL, ISDN, T1, wireless) can be simulated.
   vii. Reconfigurable lighting, designed to simulate a variety of telecommuting conditions (sunlight, glare, etc.).

6. Equipment List:

-Energy Analysis Equipment List-	Item Name	Make & Model	Size & Weight	Mechanical	Electrical	Ventilation	NREL or D-B Procure	NREL or D-B Install	Research Equip. Allowance	Notes
EA - Telecommuting Testing Laboratory										
1	Measurement equipment for tracking power consumption of the workstation and other telecommuting equipment (displays, peripherals, etc.) used in the testing.						D-B	D-B	Y	
1	Measurement equipment for tracking and data transfers and effective bandwidth to/from the test workstation.						D-B	D-B	Y	
1	Equipment for limiting network bandwidth to the test workstation.						D-B	D-B	Y	
2	White Boards		4'w x 4'h				D-B	D-B		
1	Tall Storage Cabinet		3'w x 7h				D-B	D-B		

C. GIS Lab

1. Mission:

Develop and maintain Geographic Information Systems (GIS) computing capabilities. Provide space for a large format plotter and supplies, internet mapping development servers; provide GIS service center collaborative working and demonstration area.

2. General:

a. Total Area – 1,200 SF (divided into 2 separate rooms)
b. Plotter Room + Data Storage and Computers at 400 SF
c. Working Room at 800 SF for collaborative work
d. Customers of GIS Lab include primarily NREL staff, plus some outside clients
e. Outside visitors are received once every couple months
f. Regular hours of operation
g. Workstations located in lab.
h. Lighting – desire some directional control. Dimming not required.

3. Rooms and Adjacencies:

a. The GIS lab and general office space need to be close together. Provide direct connection.
b. Locate near Insight Center
c. Locate near data center

4. Finishes, Doors and Windows:

a. Accommodate movement of large format printer in plotter room.
b. Carpeting and other standard office finishes are acceptable.
c. At least 2 large wall areas inside the working room for projections and maps

5. Chemicals:

a. No special chemical use.

6. Lab Requirements:

a. Twelve (12) linear feet of 8′ tall storage cabinets
b. Twenty four (24) linear feet of countertop surfaces
c. Overhead cable tray
d. Eight (8) lineal feet of wide under bench storage

7. Equipment List:

-Energy Analysis Equipment List-	Item Name	Make & Model	Size & Weight	Mechanical	Electrical	Ventilation	NREL or D-B Procure	NREL or D-B Install	Research Equip. Allowance	Notes
EA - GIS Lab										
1	Work Station: MapserverX	existing	3'x1'x3'				Existing to be relocated (moved from B16 Rm.101-03)	D-B		Standard workstation computer requirements
1	Work station: UNIX servers (2)	existing	3'x3'x3'				Existing to be relocated (moved from B16 Rm.101-04)	D-B		Standard workstation computer requirements
1	Equipment: Large format plotter	existing	6'x3'x4'				Existing to be relocated (moved from B16 Rm.101-03)	D-B		
1	Equipment: Large format plotter supplies and cutting surface	existing	6'x4'x3'				Existing to be relocated (moved from B16 Rm.101-03)	D-B		
1	Equipment: UPS	existing	1'x1'x1'		Emergency Power		Existing to be relocated (moved from B16 Rm.101-03)	D-B		Connected to large format plotter
1	Equipment: UPS (2)	existing	2'x2'x2'		Emergency Power		Existing to be relocated (moved from B16 Rm.101-04)	D-B		Connected to UNIX servers
1	Equipment: Projector and screen	existing	4'x6'x0.1'				Existing to be relocated (moved from B16 Rm.101-04)	D-B		
2	Conference Room Table	existing	3'-0" x 10'				Existing to be relocated (moved from B16 Rm.101-04)	D-B		

5.3.2.2 MATERIALS AND COMPUTATIONAL SCIENCES CENTER (MCSC)

A. Insight Center

1. **Mission:**

   Bring people together to share analysis of data through collaboration:
   a. State of the art video conferencing
   b. Group to group interaction
   c. Collaboration with Industry, University and Laboratory Partners
   d. Virtual proximity for People
   e. Multiple camera, microphones and tiled projections wall

2. **Existing Facility: NCAR's Visualization Center was toured; refer to photographs.**

3. **General:**

   a. 800 SF Insight Collaborative Room; 30 – 40 room capacity; typical capacity @ 20
   b. 1,200 SF Insight Visualization Room; 30 – 60 room capacity; typical capacity @ 30 – 40
   c. Shared Projection Room (size to be determined by Collaborative and Visualization room layouts as well as the projector throw and viewing distances).
   d. Rear projection; does not need to be "stitched" together.
   e. Built on commodity components and open standards.
   f. Provide a curtain/draping between projectors to control light distribution.
   g. Analyzing data from the data center; more coordinated presentations or higher profile presentations.
   h. 3-D stereo visualization
   i. Ability to send images to RSF building.
   j. Provide audio/speaker system (no need for stereo or surround sound); just need quality audio to be heard throughout the room; can be in the ceiling.

4. **Rooms and Adjacencies:**

   a. Collaboration and Visualization rooms to be directly adjacent to the HP Data Center
   b. Collaboration and Visualization to be directly adjacent to the shared Projection Room

5. **Finishes:**

   a. Typical conference room finishes.
   b. Access flooring

6. **Room Requirements:**

   a. General:
      i. No daylight
      ii. Acoustical Panels on all walls
      iii. Flat black, suspended acoustical ceiling tiles
      iv. Screen size: driven by aspect ratios: desired: minimum 20'w x 8'h
      v. 10' high ceiling minimum

   b. Furniture:
      i. One (1) control/work station for running/controlling/programming the system (approximately 6' x 12')
      ii. 10 lineal casework:
         - Countertop (for food & beverage to service meetings or meeting material display)
         - Base cabinets & upper cabinets (doors with adjustable shelves) for material storage.

iii. Two rows of flexible conference tables, in an open "horse-shoe" configuration (projection wall to be the long wall of room(s)).
iv. Presentation podium (wired for laptop power and connection to projectors)
v. Conference room chairs in both the Visualization room and the Collaborative Room shall be Herman Miller Aeron or equivalent

c. Mechanical/Electrical:
   i. Provide normal temperature and humidity controls/ranges
   ii. Operation during standard business hours
   iii. Provide additional cooling for additional projector room or provide heat removal
   iv. Provide Lighting: dimmable & zoned
   v. Do not need theatre lighting
   vi. No need for backup power
   vii. Provide wireless Ethernet connectivity
   viii. Provide power @ tables for laptops
   ix. Provide controls for Lights, audio and projection
   x. Provide card reader access to all three rooms
   xi. Provide wiring and connections for at least 3 laptop cables: one @ podium; others located around room

7. **Hazards Include:** None.

8. **Equipment List:**

NOTE: the Control/Workstation on the following equipment list should be marked with a "Y" in the Research Equipment Allowance column.

Quant.	Item Name	Make & Model	Size & Weight (w x d x h)	Mechanical	Electrical	Ventilation	NREL or D-B Procure	NREL or D-B Install	Research Equip. Allowance	Notes
NOTE: This equipment list is for reference only. Actual equipment will be selected at a later date.										
MSCS - Insight Center: Collaboration Room										
1	Rear-projection display	James River Technical: Vis Wall or Cluster Wall Mechdyne: Hi-PowerWall	20' w x 8' h		110V?		D-B	D-B	Y	Location on the long wall of room typically requires 13' between screen and rear wall
1	screen	Mechdyne: Hi-PowerWall	12' w x 8' h				D-B	D-B	Y	Resolution 4000 x 2000 pixels
1	Two-node PC cluster	Mechdyne: Hi-PowerWall					D-B	D-B	Y	high quality NVIDIA graphics cards driving projector
1	Audio/video teleconferencing peripherals	Mechdyne: Hi-PowerWall			110V?		D-B	D-B	Y	Do not need surround sound
6	Cabling and connection ports for multiple users to drive the projection system (video and mouse input) simultaneously	Mechdyne: Hi-PowerWall							Y	
1	Control panel for projection system	Mechdyne: Hi-PowerWall					D-B	D-B	Y	
1	Control/Workstation		6' x 12'	-	110V	-	D-B	D-B		Workstation has control panel, etc.
1	Software for operating items in lines 3-9 above, as part of an integrated, installed system.	Mechdyne: Hi-PowerWall					D-B	D-B	Y	
4	White Boards		8'w x 4'h				D-B	D-B		
*	Flexible Conference Tables			-	110V	-	D-B	D-B		*provide for 20 people power for 20 laptops
40	Conference chairs			-	-	-	D-B	D-B		

Quant.	Item Name	Make & Model	Size & Weight (w x d x h)	Mechanical	Electrical	Ventilation	NREL or D-B Procure	NREL or D-B Install	Research Equip. Allowance	Notes
NOTE: This equipment list is for reference only. Actual equipment will be selected at a later date.										
MSCS - Insight Center: Visualization Room										
1	Rear-projection display	James River Technical: Vis Wall or Cluster Wall Mechdyne: Hi-PowerWall	20' w x 8' h		110V?		D-B	D-B	Y	Location on the long wall of room typically requires 13' between screen and rear wall
1	screen	Mechdyne: Hi-PowerWall	12' w x 8' h				D-B	D-B	Y	Resolution 4000 x 2000 pixels
1	Two-node PC cluster	Mechdyne: Hi-PowerWall					D-B	D-B	Y	high quality NVIDIA graphics cards driving projector
1	Audio/video teleconferencing peripherals	Mechdyne: Hi-PowerWall			110V?		D-B	D-B	Y	Do not need surround sound
6	Cabling and connection ports for multiple users to drive the projection system (video and mouse input) simultaneously	Mechdyne: Hi-PowerWall							Y	
1	Control panel for projection system	Mechdyne: Hi-PowerWall					D-B	D-B	Y	
1	Control/Workstation		6' x 12'	-	110V	-	D-B	D-B	Y	Workstation has control panel, etc.
1	Software for operating items in lines 3-9 above, as part of an integrated, installed system.	Mechdyne: Hi-PowerWall					D-B	D-B	Y	
4	White Boards		8'w x 4'h				D-B	D-B		
*	Flexible Conference Tables			-	110V	-	D-B	D-B		*provide for 40 people power for 40 laptops
60	Conference chairs			-	-	-	D-B	D-B		

Quant.	Item Name	Make & Model	Size & Weight (w x d x h)	Mechanical	Electrical	Ventilation	NREL or D-B Procure	NREL or D-B Install	Research Equip. Allowance	Notes
NOTE: This equipment list is for reference only. Actual equipment will be selected at a later date.										
MSCS - Insight Center: Projection Room										
4	Projector	Mechdyne: Hi-PowerWall					D-B	D-B	Y	brightness ~5000+ lumens Monoscopic Up to 12 multiple windows -display controls -associated cabling and connection ports -for tiling multiple inputs (PC, Mac, Linux, video, etc.) Touch panel control
2±	dividers/drapes						D-B	D-B		to control light distribution between projectors

B. High Performance Computing Data Center (HPCDC)

1. Mission:

Provide advanced energy high performance computing capability to support NREL's day-to-day modeling and simulations needs in support of its EERE-based mission. The goals for the center include computer simulation and modeling, scientific data management, data mining, and visualization & collaboration (in connection with Insight Center).

This new HPCDC will be a showcase of data center energy efficiency, featuring state-of-the-art design and technologies to enable a best-in-class energy efficient high performance computer data center (both low energy use high performance computers, and energy efficient data center including waste heat recovery.) It will serve as a valuable example that could be replicated at other federal agencies, institutions, and industries.

The HPCDC will provide 200+ teraflops of processing capacity initially and allow for growth to 1+ Petra flop by 2014.

2. Rooms and Adjacencies:

The HPCDC shall provide a minimum of 10,000 SF of useable data center space and it shall be located in proximity of the Insight Center. There shall be no structural columns interior to the data center space. The data center generally runs dark and should not have natural light. About a dozen people will have access to the room.

The Secure Data Center can be located within the HPCDC and perhaps separated with chain link fencing. Secure Data Center offices can be located just outside the secure data center servers. An adjacent staging area shall accommodate the receiving of equipment into the HPCDC from a service corridor. An 8' high door will be provided. One (or more, depending on configuration) view platforms should also be located just outside to enable visitors to see into the center. Room requires service corridor access.

The center generally runs dark and should not have natural light. About a half dozen people have access to the room, but it is entered only about once per week.

Offices can be located remotely in the main office section of the building, where the work group of 6 to 8 staff can be co-located. A huddle room or conference room should be located near this group.

There shall be no green roof above the data center, nor mechanical rooftop units. Power and electronics can go above the high performance computer equipment, but plumbing, piping and fluids must go below. There shall be no structural columns interior to the data center space.

The computer data center could be planned in four in-line segments (quarters). Only the first quadrant will be populated in the initial project. Later the remaining quarters will be expanded into. A corresponding modular approach to the infrastructure is possible; however, having the infrastructure for full build-out is preferred.

Mechanical infrastructure maintenance will occur outside the room, so that maintenance staff does not need to go into the room.

Provide a service corridor adjacent to the HPCDC with a concrete floor, a staging area (20'x15'), an 8' wide by 8' high door assembly for equipment access. If the space is served by a service elevator, it shall have a minimum 10,000 lb rated capacity.

3. **Finishes:**

   a. **Finishes should be consistent with a showcase Data Center facility. The staging area and service corridor flooring shall be durable (concrete slab for example) and sufficient to withstand drayage and moving heavy equipment into and out of the Data Center. It needs to withstand heavy equipment and semi-truck deliveries.**

4. **Equipment Requirements:**

The computer equipment (racks and server units provided by NREL) will be phased into the facility over a period of time; however, mechanical and electrical infrastructure must have the capacity to support this expansion to full build-out. Waste heat recovery will be the greatest design challenge in order to optimize the energy utilization effectiveness (EUE).

The High Performance Computing Data Center (HPCDC) is expected to be built out to a full capacity of 10 mega-watts (MW) of Data Processing Equipment. All systems shall operate efficiently for the expected initial build-out of approximately 1 MW to 2.5 MW of Data Processing Equipment. The following table identifies the minimum infrastructure to be provided to support the initial and future build-out of the HPCDC.

System	2.5 MW (Initial Build - 2011)	5 MW (2015)	10 MW (Future)
Transformer	x	x	o
Wiring	x	x	o
Conduit	x	x	x
Fans/Air handlers/Coils (note 2)	x	o	o
Ductwork within Data Center Room (note 3)	x	x	x
Ductwork exterior to the Data Center Room (note 3)	x	x	o
Process Cooling Equipment (note 2)	x	o	o
Process Cooling Piping within Data Center Room (note 3)	x	x	x
Process Cooling Piping exterior to Data Center Room (note 3)	x	x	o
Waste Heat System Equipment (note 2)	x	o	o
Waste Heat System Piping/Ducts within Data Center Room (note 3)	x	x	x
Waste Heat System Piping/Ducts exterior to Data Center Room (note 3)	x	x	o
UPS (*Note 1*)	x	x	o
Generator (*Note 1*)	x	x	o
Data Center Room and Support Space, including space for infrastructure systems.	x	x	x
Electrical Distribution	x	x	o

System	2.5 MW (Initial Build - 2011)	5 MW (2015)	10 MW (Future)	(I B

	Transformer	x	x	o	2
	Wiring	x	x	o	
	Conduit	x	x	x	
	Fans/Air handlers/Coils (note 2)	x	o	o	
	Ductwork within Data Center Room (note 3)	x	x	x	
	Ductwork exterior to the Data Center Room (note 3)	x	x	o	
	Process Cooling Equipment (note 2)	x	o	o	
	Process Cooling Piping within Data Center Room (note 3)	x	x	x	
	Process Cooling Piping exterior to Data Center Room (note 3)	x	x	o	
	Waste Heat System Equipment (note 2)	x	o	o	
	Waste Heat System Piping/Ducts within Data Center Room (note 3)	x	x	x	
	Waste Heat System Piping/Ducts exterior to Data Center Room (note 3)	x	x	o	
	UPS (*Note 1*)	x	x	o	
	Generator (*Note 1*)	x	x	o	
	Data Center Room and Support Space, including space for infrastructure systems.	x	x	x	
	Electrical Distribution	x	x	o	
Transformer					
Wiring					
Conduit					
Fans/Air handlers/Coils (note 2)					
Ductwork within Data Center Room (note 3)					
Ductwork exterior to the Data Center Room (note 3)					
Process Cooling Equipment (note 2)					
Process Cooling Piping within Data Center Room (note 3)					
Process Cooling Piping exterior to Data Center Room (note 3)					
Waste Heat System Equipment (note 2)					
Waste Heat System Piping/Ducts within Data Center Room (note 3)					
Waste Heat System Piping/Ducts exterior to Data Center Room (note 3)					
UPS (*Note 1*)					
Generator (*Note 1*)					
Data Center Room and Support Space, including space for infrastructure systems.					
Electrical Distribution					

Legend: x = Provided by ESIF Design/Builder
o = Future Provision – Not in Contract

Note 1: Refer to Performance Specification D99 for percentage of data processing equipment to be supported by the UPS and Generator.

Note 2: Equipment that would cause an outage or create a construction damage risk to the Data Center at the time of the future build-out work shall be included in the initial build-out.

Note 3: Duct and pipe shall be extended with dampers, valves and/or caps such that future build-out work can connect to it without causing an outage or construction damage risk.

5. Hazards Include: None.

6. Room Requirements:
    a. Fire barrier should be a minimum of 2 hour between the HPCDC area and adjacent occupancies. It's recommended that this be a blank wall with minimum openings, constructed per NFPA 75.
    b. Adjacent areas should have hazards no greater- than a typical office area.
    c. The HPCDC area shall not be located above, below, or adjacent to areas or other structures on the interior of the building or exterior, where hazardous processes are located unless approved protective features are provided.
    d. Exterior adjacent areas should have minimal combustibles and require minimal maintenance.
    e. To the greatest extent possible, eliminate water services in spaces above computer room. Seal area water tight.
    f. This area shall be sprinklered on pre-action system. A clean agent suppression system is not required. Portable fire extinguishers are required.
    g. Ventilation will provide positive air pressure

Quant.	Item Name	Make & Model	Size & Weight (w x d x h)	Mechanical	Electrical	Ventilation	NREL or D-B Procure	NREL or D-B Install	Research Equip. Allowance	Notes
NOTE: This equipment list is for reference only. Actual equipment will be selected at a later date.										
MSCS - High Performance Computing Data Center (HPCDC)										
1	High Performance Computer						NREL	NREL	N	Provided and installed by NREL, outside of subcontract scope

C. Applied Battery and Electrochromatics Lab

1. Mission:

Conduct synthesis and characterization of batteries and thin-film electro chromic devices.

2. Existing Facility:

Current laboratory in SERF shares space with another lab (no collection/collaboration between). Primarily perimeter benched with one center bench with 8' glove box and bench space on other side for research. Other glove box is located perpendicular to perimeter bench. Most of base casework is drawers of different sizes for equipment and materials.

3. General:

a. 3,000 SF – one (1) large lab
b. Provide workspace for 12 people (approximately 2 – PI's; 6 – researchers; 4 – graduate students)
c. Provide work space cubicles for staff
d. Provide viewing window into lab for tours.
e. Provide 5 fume hoods as listed in the equipment list. Fume hoods must be able to be fitted with a HEPA filter in case of future nano-material use.

4. Rooms and Adjacencies:

a. Fairly independent.
b. Locate compressors and heat exchangers in service corridor or interstitial space to minimize noise in lab.

5. Finishes:

a. Provide acid resistant floor with a coved, integral base.
b. Walls & ceilings: standard laboratory finishes.

6. Laboratory Requirements:

a. Door:
   i. 3'-0" width door with 2'-0" side leaf.
b. Casework:
   i. 150 linear feet of bench top
      - 36" high black epoxy tops are acceptable
      - Primarily perimeter bench casework with center islands for equipment.
      - 3 Sinks
   ii. 100 linear feet of upper cabinets: glass doors with adjustable shelving
      - Provide clearance on bench top for equipment (may push mounting height of upper cabinets up)
   iii. 100 linear feet of base cabinets: provide various drawer sizes (95% drawers/5% cabinets – primarily @ sinks)
   iv. 20 linear feet of tall storage cabinets
c. Utilities/Gases/Chemicals:
   i. House DI (used for rinsing & cleaning)
   ii. House Nitrogen
   iii. 6 – gas cylinders (in service corridor; regulators on cylinder head:
      - O2, Argon (purge glove box), Forming Gas (Hydrogen-Nitrogen mix)
d. Mechanical/Electrical:
   i. Cooling water for glove boxes
   ii. Provide local ventilation drops at each bench
   iii. Vent:
      - glove box

- Ovens (up to 1,200°F)
- Fume Hoods

iv. Provide Class D fire extinguisher (use lithium in the lab (primarily contained within the glove boxes.)
v. Provide good ambient lighting with task lighting
vi. Would like to have daylight
vii. Provide two (2) flamable storage cabinets, one (1) gas storage cabinet and four (4) corrosive storage cabinets.

7. **Hazards Include:**

a. Hydrogen

b. Lithium Use

c. Lab-scale chemical use

d. Lab-scale use of toxic gases

e. Small quantities of pyrophoric materials

8. **Equipment List:**

Quant.	Item Name	Make & Model	Size & Weight (w x d x h)	Mechanical	Electrical	Ventilation	NREL or D-B Procure	NREL or D-B Install	Research Equip. Allowance	Notes
MSCS - Applied Battery and Electrochromatics Lab										
1	EvoVac glovebox/dep chamber	existing	12' l x 5' w x 8'h 2000lbs, space for 4 gas bottles	50psi cooling water, compressed air	208V, 3phase, 5 wire, 50A	Filtered exhaust	NREL	NREL		
1	Glovebox	existing	11'l x 5'w x 7'h, 100lbs, 2 gas bottles		2 x 115V, 20A circuit	Filtered exhaust	NREL	NREL		
1	Glovebox	VAC	11'l x 5'w x 7'h, 100lbs, 2 gas bottles		2 x 115V, 20A circuit	Filtered exhaust	D-B	D-B	Y	
5	Fume Hood		6'				D-B	D-B		provide flammable storage cabinets below
1	VWR oven	existing	1.5' x 1.5' x 2', tabletop		115VAC, 4A		NREL	NREL		
1	Thermo oven	existing	2' x 2' x 2', tabletop		240VAC, 18.3A	Filtered exhaust	NREL	NREL		
1	GCA oven	existing	1.5' x 1.5' x 2', tabletop		115VAC, 7.5A	Filtered exhaust	NREL	NREL		
1	Testing Oven	existing	2' x 2' x 3' tall, tabletop		250VAC, 20A		NREL	NREL		
1	Table Heating Device	existing	3' x 4' x 3' , sits on floor		115VAC, 20A		NREL	NREL		
1	Controlled Environment Testing Apparatus	existing	4' x 4' x 1', Tabletop		115VAC, 20A		NREL	NREL		
1	Spray Station	existing	2' x 3' x 2'	Cooling water, compressed air, nitrogen	115VAC, 20A	Must be in fume hood	NREL	NREL		Table top, in fume hood

Quant.	Item Name	Make & Model	Size & Weight (w x d x h)	Mechanical	Electrical	Ventilation	NREL or D-B Procure	NREL or D-B Install	Research Equip. Allowance	Notes
MSCS - Applied Battery and Electrochromatics Lab (pg. 2)										
1	Atomic Layer Deposition system	existing	3' x 3' x 4' tall, floormt.	Cooling water, compressed air, nitrogen	115VAC, 20A	Filtered exhaust	NREL	NREL		
1	Hotwire CVD Station	existing	7' x 4' x 7' tall, Sits on Floor	Compressed Air, Nitrogen	115VAC, 25A	Filtered Exhaust, Must be close to fume hood	NREL	NREL		
1	Gas Cabinets						D-B	D-B		
4	Corrosive Storage						D-B	D-B		22 gal, self closing doors
12	Lab Stools						D-B	D-B		

5.3.2.3 CENTER FOR ELECTRICITY, RESOURCES AND BUILDING SYSTEMS (CERBS)

A. High Bay Lab - Main Lab

1. Mission and Activities

The High Bay Lab is the main test lab for conducting electrical system integration activities. This lab supports the following programs: Office of Electricity (OE), Solar Energy Technology Program (SETP), Buildings program, Wind Program, and other work for others activities.

Research activities include testing interactions and compatibility of different distributed and renewable energy systems with the electric grid and each other. The lab will conduct research exploring a variety of operating configurations including: grid connected stand-alone, microgrids, and hybrid power systems. Tours of the laboratory would be accommodated by windows in adjacent halls that look into the laboratory. It is preferred that tour groups not enter the laboratory but be able to see what is going on inside for safety reasons.

2. General Information

a. At lease 13,000 sq ft of finished test area (not including vehicle access) shall be provided.
   1. 4,000 sq ft of test area shall be provided for building technology experiements. 50% of this area shall have unobstructed southern view for solar access.
   2. 6,000 sq ft of test area shall be provided for the 480V and 13.2KV distributed energy test areas. This area shall have four 20′ x 20′ open test pads, six 10′ x 10′ test pads and two 20′ x 40′ test pads.
   3. 3,000 sq ft test area shall be provided for hydrogen experiments. This would include: concrete pads for hydrogen storage tanks (30′ x 30′), hydrogen filling stations (10′ x 10′) located with driving access for vehicles and buses, and a (80′ x 20′) for Hydrogen Systems and generation devices.

b. Video connections with live feeds to the High Bay Control from the Outdoor test area.
c. Pds shall be accessible by forklifts to position equipment. Yard containment engineering, grading and concrete gutter shall be provided.
d. Installa minimum of 100kW of photovoltaic panels on the roof of the facility with electrical connections to the research electrical distribution bus and normal building power.

3. Examples and Pictures

Below are pictures of High Bays at NREL. These are meant to be representative examples of similar rooms or equipment.

High Bay Lab with partitioned areas for individual unit testing

Overhead Gantry Crane in high bay

Individual portioned area with rollup door, snorkel, and small crane.

4. **Adjacencies and Room Connections**

   a. The Highbay shall be immediately adjacent to the Highbay control room.
   b. The Highbay shall have electrical connections to the REDB.
   c. Alcove or partition arrangements should be made in the high bay to allow for individual experiments to be coordinated off and isolated from view and possible noise issues.
   d. There should be several large rollup doors with access to the outside from this lab. This would allow an 18-wheel truck to deliver test articles and be removed by forklift or overhead crane.
   e. This lab may be located near a loading dock.
   f. The design of the High Bay Main Lab should optimize cable tray, bus duct, and bride crane access and area. Overhead crane flexibility should be maximized to maximize the versatility of the high bay laboratory.

5. **Laboratory Requirements**

   a. General
      i. Overhead ceiling, mezzanine or interstitial space options for running common services should be considered as to preserve laboratory space for experiments.
      ii. Some related labs might stack above others. Instrument Development and Power Electronics could go on a second floor.
      iii. The lab must be very flexible. The time spent in experiment setup is greater than the testing itself. Design of labs should stay away from dependence on ladders for access to utilities; mini-scissor lifts would be better.
      iv. One (1) 6′ x 6′ x 2′ corrosive storage cabinet
      v. One (1) 6′ x 6′ x 2′ Flammable storage cabinet
      vi. One gas storage cabinet

   b. Electrical
      i. This lab will need both facility power and connections to the Research Electrical Distribution Bus (REDB). The REDB is described in section 5.3.10.2A.
      ii. Facility power will need to be of adequate size to power the planned research equipment. Special power requirements may be need for the 1 MW grid simulator.
      iii. 120V facility electrical connections will be made available at points around the perimeter of the lab and in the lab interior to accommodate various experiments.

iv. 480V facility electrical connections will be made available at specific locations like within test bays/alcoves and need strategic equipment.

c. Mechanical
   i. This lab will require significant ventilation.
   ii. This lab will have large thermal loads from equipment.

d. Fuels
   i. The highbay shall have both facility fuel lines and research fuel lines (RFL). The requirements for the RFL are covered in Section 5.3.10.4B.
   ii. Fuels anticipated for use in the High Bay Lab are: diesel, biodiesel, natural gas, and hydrogen.
   iii. Test articles will require air supply, exhaust, and spill containment.

e. Finishes and Materials
   i. The floor shall have an acid-resistant finish to facilitate cleanup of accidental spills (i.e. battery acid).
   ii. Concrete slab floor needs to withstand heavy equipment and semi-truck deliveries; may require additional reinforcing/thickness or a structural slab, acid resistant and bermed.
   iii. The walls shall be finished in a way to provide a surface for mounting research equipment. The walls shall be of sufficient strength to mount lab devices.
   iv. Butcher block wood countertops are appropriate for all benches serving electronics.
   v. Ceiling: open to structure is acceptable
   vi. Minimum of six garage doors to outdoor test area: 16-18' wide x 16' high. Doors shall be powered.

f. Hazards and Special Needs
   i. High voltage and high current electricity.
   ii. Noise and Vibrations from test articles.
   iii. Intake and exhaust ventilation for test articles will be provided
   iv. Exhaust ventilation will not only be required for fuel use, but battery storage as well.
   v. Test articles will require spill containment.
   vi. Overhead cable tray to allow hardware communication between devices in Labs (Overhead restrictions may require trench placement).
   vii. Hydrogen (associated with fuel cell operation)
   viii. Exhaust gases from generators (including CO and NOX)
   ix. Shock and Arc faults

6. Equipment List:

Clarifications for High Bay equipment:

1) The drive-in test chamber will need to accommodate a vehicle running under load.

2) A pit for a future chassis dynamometer is required. Large heavy duty truck and SUV is the size and class needed for this pit. Emissions measurement may be desired in the future. Provide the necessary egress/pit access and all safeties, including requisite inertia mass/vibration isolation/sound attenuation, Fire Protection, lighting, scavenge exhaust, and HVAC systems

3) The -40F test chamber will operate with test equipment under load. The amperage or pull down minimum time or mass is not known at this time.

4) The 20k Btu/hr heat rejection is the thermal load for (1) unit. There are actually a total of 20 of these units, 4 NREL supplied plus the 16 new one listed on the equipment list. See Section D99G Performance B.a.3) in performance specifications Section 6.

5) The amp draw for the Mustang wind turbine simulator is not known at this time.

6) RHC lines are required per Section D99G of the performance specifications.

7) The overhead bridge crane specified for this laboratory is intended to cover all of the high bay laboratories (High Bay, Commercial High Bay and VSHOT High Bay Laboratories.).

Quant.	Item Name	Make & Model	Size & Weight (w x d x h)	Mechanical	Electrical	Ventilation / Utilities	Research Bus Cnxn (AC/DC/none)	NREL or D-B Procure	NREL or D-B Install	Research Equip. Allowance	Notes
CERBS - Highbay Lab - Main Laboratory											
1	Overhead bridge crane		full span and length of highbay					D-B	D-B	Y	20 ton, 25' hook height: based on 100' w x 200' base crane. Requires bldg integration.
1	Covered Pit for future work							D-B	D-B		Requires bldg integration.
1	Drive in Environmental Test Chamber	TBD (quote expected 2/9)	400sf capacity, -40 to 50C	building chiller water	480V, 3ph		AC and DC	D-B	D-B	Y	AC/DC bus connections Sized for large SUV. Exhaust for running combustion engines Possibly use outdoor air as preheat or precool.
1	110 cf Envrion Chamber	Tenney	60"x60"x84" (-40 to 80C)	Building coolant loop	480V 3ph		Ability for AC or DC conxn	D-B	D-B	Y	
1	1MW Utility Grid Sim	(16x) Pacific Power 3060-MS 50KW (4 NREL supplied)	36"x30"x72" 1600lbs ea.		208 or 480 depending on final config		1 or 2 AC w/ capability to spilt into two separate sources	D-B	D-B	Y	Generate heat at 20kBTU/hr at full power
1	200 kW RLC AC load bank (water cooled)	Simplex LBW 200 kW RLC AC load bank		chiller water conxn	120V/240		AC	D-B	D-B	Y	
1	500KW wind turbine simulator #2 (stationary motor gen test stand)	Mustang custom	10'x5'x8' 6000lbs		480V		AC	D-B	D-B	Y	
1	wind turbine simulator highbay partition - noise deadening	custom						D-B	D-B		integrated in highbay design
1	Residential ZEB testbed	TBD			TBD			D-B	D-B	Y	ZEB-Zero Energy Building
1	Commercial ZEB testbed	TBD			TBD			D-B	D-B	Y	
1	Corrosive Storage		6'x6'x2'								
1	Flammable Storage		6'x6'x2'								
1	Gas Cabinets										
1	Gas Monitoring										
20	Lab Stools							D-B	D-B		

B. Commercial Building High Bay Lab

1. Mission and Activities

The purpose of the Commercial Building High Bay Lab is to test full scale integration of building energy systems. This lab supports the following programs: Building Technologies program and work for others activities.

Research activities include testing interactions and compatibility of building energy production, energy storage, HVAC, lighting, and day lighting systems. Research in this lab will study interactions at the building level and at the distribution level by connecting to activities in the High Bay Main Lab and associated laboratories. Activities will focus on energy efficiency, energy storage, load control/shifting, and control of systems.

2. General Information

a. 4,000 SF High Bay Lab
b. 20' x 16' Open storage area for large items to be delineated by heavy duty steel shelving.
c. Ability to run tests on various, heavy equipment: generators; cooling towers, fuel cells, etc.
d. Access to outside via several large rollup doors capable of driving in a loaded 18-wheel truck for loading/un loading test articles.
e. The laboratory shall be sized to accommodate all planned equipment.

3. Examples and Pictures

Below are pictures of High Bays at NREL. These are meant to be representative examples of similar rooms or equipment.

Thermal Test Facility HVAC test lab

Thermal Test Facility high bay

4. **Adjacencies and Room Connections**
   a. The Commercial Building High Bay Lab shall be immediately adjacent to the Main High Bay.
   b. The Commercial Building High Bay Lab shall have electrical connections to the REDB.
   c. Alcove or partition arrangements should be made in the high bay to allow for individual experiments to be coordinated off and isolated from view and possible noise issues.
   d. There should be a large rollup door (18' x 16') with access to the outside test pad. This would allow an 18-wheel truck to deliver test articles and be removed by forklift or overhead crane.
   e. This lab may be located near a loading dock.

5. **Laboratory Requirements**
   a. General
      i. Overhead ceiling, mezzanine or interstitial space options for running common services should be considered as to preserve laboratory space for experiments.
      ii. Most of the ceiling area must be clear of obstructions to test daylighting systems installed in the roof.
      iii. The lab must be very flexible. The time spent in experiment setup is greater than the testing itself.
   b. Electrical
      i. This lab will need both facility power and connections to the Research Electrical Distribution Bus (REDB). The REDB is described in section 5.3.10.2A.
      ii. Facility power will need to be of adequate size to power the planned research equipment. Expected power requirements are 480 V, 3phase, 1000 kVA.
   c. Mechanical

i. This lab has normal temperature and humidity requirements.
ii. This lab will require direct exhaust/vent to outside for exhaust and supply air flows.
iii. This lab will require connections to the campus chilled water and heating water loops, and research chilled water and heating water loops.

d. Fuels
i. This lab shall have both facility fuel lines and research fuel lines (RFL). The requirements for the RFL are covered in Section 5.3.10.4B.
ii. Fuels anticipated for use in this lab are: natural gas and hydrogen.
iii. Test articles will require air supply, exhaust and spill containment.

e. Finishes and Materials
i. The floor shall have an acid resistant finish to facilitate cleanup of accidental spills (i.e. battery acid).
ii. Concrete slab floor needs to withstand heavy equipment and semi-truck deliveries; may require additional reinforcing/thickness or a structural slab.
iii. The walls shall be finished in a way to provide a surface for mounting research equipment. The walls shall be of sufficient strength to mount lab devices.
iv. Butcher block wood or black epoxy countertops are appropriate for all benches.
v. Ceiling open to structure is preferable.

f. Hazards and Special Needs
i. High voltage and high current electricity.
ii. Noise and Vibrations from test articles.
iii. Intake and exhaust ventilation for test articles shall be provided
iv. Exhaust ventilation will not only be required for fuel use, but battery storage as well.
v. Test articles will require spill containment.

6. Casework:
a. 24 Lineal feet of 8′ tall storage cabinets
b. 40′ lineal feet of bench table top
c. Overhead cable tray
d. 20 lineal feet of under bench storage
e. 20 lineal feet of wall cabinets (above bench)
f. One (1) sink
g. One (1) 6′ x 6′ x 2′ Flammable storage cabinet

7. Equipment List: None for this laboratory.

C. VSHOT Highbay Laboratory:

1. Mission and Activities

This lab conducts optical characterization of large solar concentration devices (Parabolic Trough Concentrator Modules) as well as computer optical modeling to predict the performance of the optical dish systems. Part of this testing could include wind load simulation on structures.

Optical and thermal field test tools will also be developed in this laboratory.

2. General Information

a. 7,000 SF High Bay Lab
b. 25' clearance ceilings for rotating large structures in situ.
c. Gantry crane system for moving large structures.
d. Access to outside or to docking area via large rollup door (10'x16').
e. Space for Environmental Chamber large enough for testing 1 to 2 square meter mirrors.
f. The laboratory shall be sized to accommodate all planned equipment.

3. Examples and Pictures

Below are pictures of the current VSHOT lab at the Joyce Street Facility and other high bay space at NREL. These are meant to be representative examples of similar rooms or equipment.

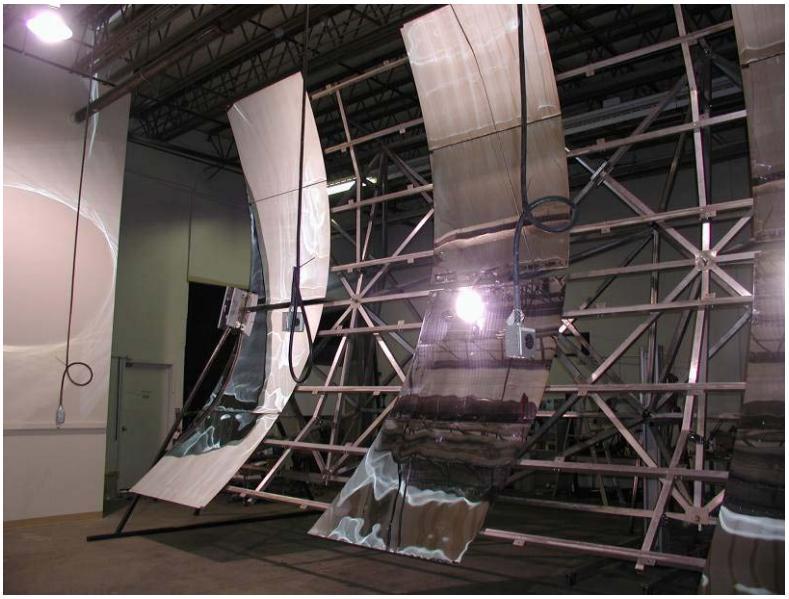

VSHOT Lab showing example of module under test

VSHOT Lab showing example of module under test

Overhead Gantry Crane in high bay (note – thios phoe shows a bridge crane but a gantry crane is requested)

4. **Adjacencies and Room Connections**
   a. The VSHOT Laboratory shall be near the delivery dock to receive large mirror structures.
   b. Near the machine shop.
   c. Near associated offices

5. **Laboratory Requirements**
   a. General
      i. Overhead ceiling, mezzanine or interstitial space options for running common services should be considered as to preserve laboratory space for experiments.
      ii. The lab must be very flexible. What is needed is open space (7,000 sq. ft.) and ceiling clearance. The shape and size of structures tested will vary from very small (1 meter square) to very large (7 meters by 16 meters in length). Equipment used in the lab will adjust to accommodate the structures.
      iii. Provide space with at least 25' ceilings to accommodate rotation of the above large optical devices.
      iv. Space and services are needed for a large thermal cycling chamber capable of testing of 2m square mirrors. This should reside in a corner of the lab space.
      v. Provide means to control the lighting conditions in the lab. Windows at a high level are OK, but if present, need the ability to shade or cover them. Otherwise, outdoor lighting is not desirable and windows shall be eliminated. It would be desirable to have dimming control of overhead lighting, but at least the ability to turn individual lights on/off.
      vi. No special safety features needed for laser use as all lasers or of low 3A classification.
      vii. Drop in tours and visitors are common, so viewing window from corridor would be desirable.

   b. Electrical
      i. This lab will need both facility power and connections to the Research Electrical Distribution Bus (REDB). The REDB is described in section 5.3.10.2A.
      ii. Facility power will need to be of adequate size to power the planned research equipment. Most equipment uses standard 110v AC. Provide outlets at 10' spacing along walls. Two 208 volt single

phase outlets (30 amps) and one 480 volt three phase connection for Thermal Cycling chamber described above.

c. Mechanical
   i. No special ventilation needs beyond what is normal for a space this size.
   ii. DI water, cooling water and compressed air for power tools.

d. Fuels
   i. No fuels used.

e. Finishes and Materials
   i. The floor shall have an acid resistant finish to facilitate cleanup of accidental spills.
   ii. Concrete slab floor needs to withstand heavy equipment and semi-truck deliveries; may require additional reinforcing/thickness or a structural slab.
   iii. The walls shall be finished in a way to provide a surface for mounting research equipment. The walls shall be of sufficient strength to mount lab devices.
   iv. Butcher block wood countertops are appropriate for all benches serving electronics.
   v. Ceiling: open to structure is acceptable

f. Hazards and Special Needs
   i. 230v, 3 phase power

6. Casework:

g. Twelve (12) lineal feet of 8′ tall storage cabinets
h. Twenty four (24) lineal feet of bench table top
i. Overhead cable tray
j. Twelve (12) lineal feet of under bench storage
k. Twelve (12) lineal feet of wall cabinets (above bench)
l. One (1) sink

7. Equipment List:

Quant.	Item Name	Make & Model	Size & Weight (w x d x h)	Mechanical	Electrical	Ventilation / Utilities	Research Bus Cnxn (AC/DC/none)	NREL or D-B Procure	NREL or D-B Install	Research Equip. Allowance	Notes
CERBS - Highbay Laboratory - VSHOT											
1	Overhead gantry crane system		60' x 80' x 25' (footprint)					D-B	D-B	Y	10 ton capacity
1	Large thermal cycling chamber		10' x 10'	DI water	220 or 408 V			D-B	D-B	Y	temp. range: -40°F to 150°F± provide floor drain & humidity controls
1	8' x 4' Optical table	NewporT: ST-UT2 Series Upgradable SmartTable® Optical Tables featuring IQ® Damping Technology						D-B	D-B	Y	
1	Palette jacks	existing						DB	DB	Y	
1	Manual genie lifts	existing						DB	DB	Y	
1	Drill press				TBD			DB	DB	Y	
1	Hand tools	existing						NREL	NREL		
1	Bench top vice							D-B	D-B	Y	metal working vice with 4" jaws
4	Lab Stools							D-B	D-B		

D. Highbay - Control Room

1. Mission and Activities

The High Bay control room allows a single location to control and monitor experiments in multiple laboratories. The other labs that will be monitored from the control room are: High Bay Main Lab, Power Electronics Lab, Energy Storage Lab, Smart Grid Components Lab, High Voltage/High Current Lab, Hydrogen Systems Lab, and Instrument Development Lab, Outdoor Test Area, and Roof Test area.

2. General Information

a. The high bay control room will be 800 sq ft.
b. There should be windows that allow people to see from the high bay control room into the High Bay Main lab. If the entire high bay cannot be seen from the control room windows, video feeds should be provided for those areas.
c. Video connections with live feeds will be provided to allow people in the control room to see into the following labs: Power Electronics Lab, Energy Storage Lab, Smart Grid Components Lab, High Voltage/High Current Lab, Hydrogen Systems Lab, Instrument Development Lab, Outdoor Test Area, and Roof Test area.
d. The Control Room must be connected to the Research Electrical Distribution Bus (REDB) for the monitoring and control of all devices. The REDB does not physically need to be inside the Control Room.
e. The Control room will also monitor lab use of water, gases and fuels for the Power Electronics Lab, Energy Storage Lab, Smart Grid Components Lab, High Voltage/High Current Lab, Hydrogen Systems Lab, Instrument Development Lab, Outdoor Test Area, and Roof Test area.
f. Provide card reader access to control room entrance doors.

3. Examples and Pictures

The following are examples and pictures of control rooms at NREL, visualization tools, and control SCADA.

Control room at Wind Site High Bay

Pictures from inside the NREL Distributed Energy Resources Test Facility Control Room

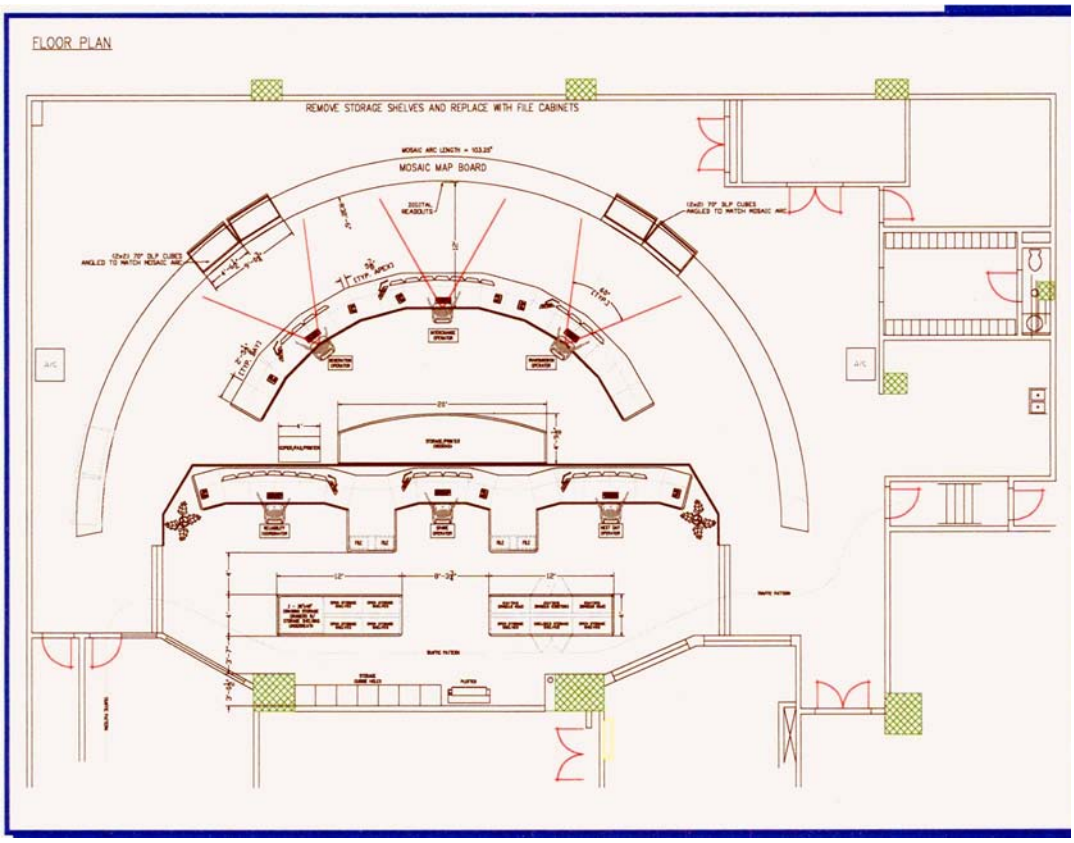

Control Room Conceptual Drawing

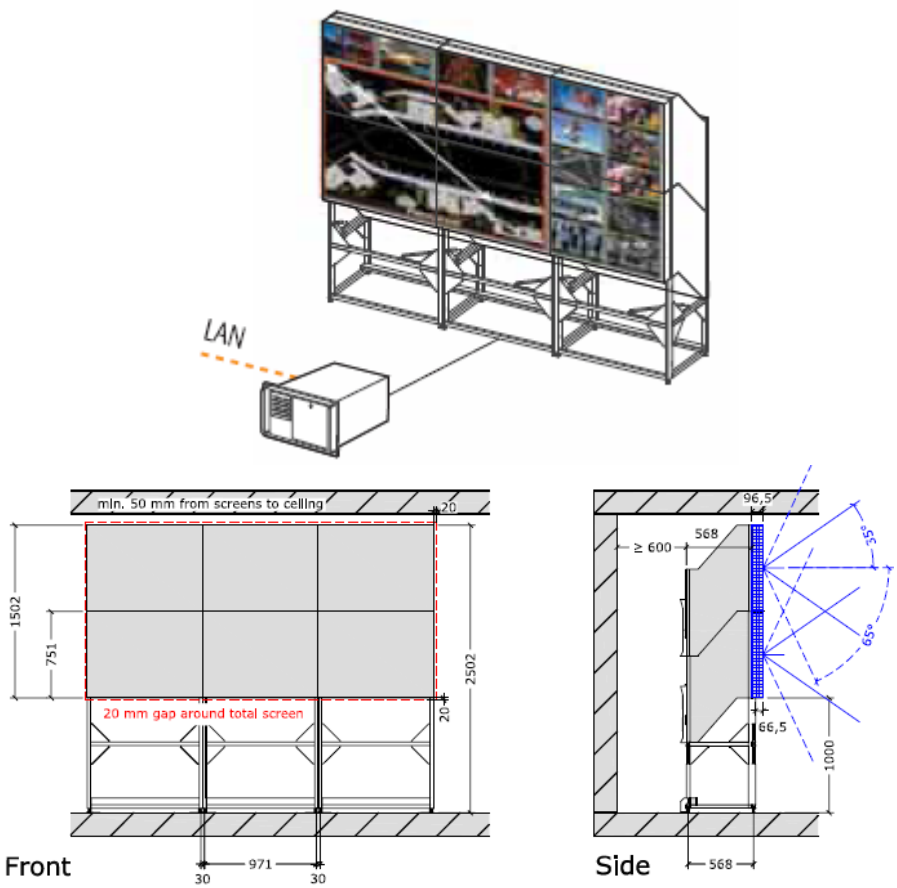

Examples of Visual Display for Control Room SCADA (www.barco.com)

4. **Adjacencies and Room Connections**
   The Control Room must be located adjacent to the High Bay Lab, but separated by a wall for safety, with a view window into the High Bay. Tours will be brought to the control room.

5. **Laboratory Requirements**
   a. General Reserved
   b. Electrical Reserved
   c. Mechanical Reserved
   d. Fuels Reserved

6. **Finishes and Materials**
   a. Furnish with normal office type materials. Desk Surfaces
   b. Provide acid resistant flooring, bermed
   c. The acoustics in the control room shall minimize any noise exterior to the room i.e. from the high bay. Sound deadening panels will be used on the control room walls and ceilings.

7. **Hazards and Special Needs**
   No special hazards are in the control room.
   UPS will be provided for electrical computer equipment in the control room to keep monitoring and control running during a power outage.

8. **Casework:**
    a. Twelve (12) lineal feet of 8' tall storage cabinets
    b. Twenty Four (24) lineal feet of bench table top
    c. Overhead cable tray, to allow hardware communication between devices in PS labs
    d. Twelve (12) lineal feet of under bench storage
    e. Twelve (12) lineal feet of wall cabinets (above bench)

9. **Equipment List:**

Quant.	Item Name	Make & Model	Size & Weight (w x d x h)	Mechanical	Electrical	Ventilation / Utilities	Research Bus Cnxn (AC/DC/none)	NREL or D-B Procure	NREL or D-B Install	Research Equip. Allowance	Notes
CERBS - Highbay Laboratory - Control Room											
1	AC/DC test bus and SCADA	as described in RFP (possible vendors SEL,Survalent ,etc)						D-B	D-B	Y	
1	AC/DC test bus SCADA visualization dlp cubes and video controllers	custom						D-B	D-B	Y	Similar to integrators using equip from www.barco.com, www.christiedigital.com
12	Workstation chairs							DB	DB		
6	workstations	as typical for control coom						D-B	D-B		

E. High Voltage/High Current Lab

1. Mission and Activities

The High Voltage/ High Current Lab will provide a safe environment for conducting high voltage surge testing and high current short circuit tests on equipment.

2. General Information

a. The High Voltage/ High Current Lab will be 2,000 sq ft.
b. This room shall be designed to provide an explosion proof area for specialized high voltage and high current testing.
c. Video connections with live feeds will be provided to the high bay control room.
d. The High Voltage/ High Current lab will have access to a large roll-up door to the outside.
e. Ventilation shall be provided
f. High voltage surge test and current short circuit test loads are high intensity but extremely short duration therefore, minimal thermal load, but significant structural containment and smoke purge design requirements.

3. Examples and Pictures

The following are pictures of the High Voltage Test Equipment.

NREL Provided High Voltage Surge Equipment

4. Adjacencies and Room Connections

a. The High Voltage/ High Current Lab shall be located near the High Bay control room.
b. The High Voltage/ High Current lab must be connected to the Research Electrical Distribution Bus (REDB).
c. Provide large roll-up door access to laboratory area

5. Laboratory Requirements

a. General
   i. This laboratory should be located on the first floor and be both electrically and mechanically isolated from other laboratory areas.

b. Electrical
   i. Must have both facility power and REDB electrical connections
   ii. 480 VAC service must be provided to the laboratory though an isolation transformer
   iii. All electrical services in this laboratory must be explosion proof, Class 1, Div 2.
   iv. Four LAN, four Serial and one Fiber connections to the control room are required.

c. Mechanical
   i. Full makeup and exhaust air must be provided to this lab.
   ii. Space must be designed to account for large thermal loads from equipment under test.

d. Fuels
   i. Connection to the research fuel lines shall be provided.

6. Finishes and Materials

a. The floor shall have an acid resistant finish. Floor, Wall and Ceiling surfaces shall be of concrete construction.
b. Concrete slab floor must withstand heavy equipment loading and wear. Construction shall include reinforced structural slab.
c. Walls shall include method to attach electrical and mechanical research equipment.
d. Walls shall be designed of sufficient strength to mount heavy equipment.
e. Butcher block wood countertops are appropriate for all benches serving electronics. Countertops used within a specified test area shall be constructed of non-flammable concrete material.

7. Hazards and Special Needs

a. High Voltage and High Current
b. Arcing and blasts are possible
c. Provide expolsion proof electrical and fuel services.
d. The high Voltage/ High Current Lab will have a separate ventilation system to provide for smoke extraction.
e. Lab door to be tied to interlock during high-hazard testing

8. Casework

a. Twenty four (24) lineal feet of bench table top
b. Overhead cable tray
c. Twelve (12) lineal feet of under bench storage
d. One (1) sink

9. Equipment List:

Quant.	Item Name	Make & Model	Size & Weight (w x d x h)	Mechanical	Electrical	Ventilation / Utilities	Research Bus Cnxn (AC/DC/none)	NREL or D-B Procure	NREL or D-B Install	Research Equip. Allowance	Notes
CERBS - High Voltage/High Current Laboratory											
1	surge generator system	Keytek ECAT	2'x3'x5' (400lbs)		120,15A 1p, 480 30A 3p		DC	exisiting	D-B		equipment is portable, control center and E522 module
1	3-phase variable autotransformer	Superior Electric (Volt-Pac),	3'x3'x3' (200lbs)		480V, 30A 3p			exisiting	D-B		
1	30 KVA 480 V to 480 V 3-phase isolation transformer	SquareD	pad mount 1000lbs		480v, 36A, Sp			D-B	D-B	Y	Note: 30 KVA needed for surge tester, 30-250 KVA needed for DC power supply
1	300 kVA 480V to 480V 3 phase isolation transformer	SquareD	pad mount 1000lbs		480V, 360A, 3P			D-B	D-B	Y	
1	Camera							D-B	D-B	Y	
1	+-125KW DC station	Aerovironment ABC-150	See Storage Lab for Specs		240 3ph, 360A		DC	D-B	D-B	Y	Requires power isolation xfrmr, modify for casters
4	Lab Stools							D-B	D-B		

F. Power Electronics Lab

1. Mission and Activities

The Power Electronics Lab is the main test lab for development and testing of the power electronics components and circuits used in renewable energy integration. This lab supports the following programs: Office of Electricity (OE), Wind Program, CRADA works with various strategic partners and work for others activities.

Research activities include integration of various distributed and renewable energy resources, development of power electronics systems, advanced control development, testing of prototype and industrial converters, hardware-in-loop testing of power electronics integrated in distribution systems model. Additional activities include researching on a variety of operating configurations including: grid-connected, stand-alone, micro grids, and hybrid power systems. Tours of the laboratory would be accommodated by windows in adjacent halls that look into the laboratory. It is preferred that tour groups do not enter the laboratory but be able to see what is going on inside for safety reasons.

2. General Information

a. 2,000 square foot of floor area
b. Several partitioned areas: 3 power electronics (PE) work bench areas, one hardware-in-loop (HIL) area and one equipment development area. (Refer to the example floor plan).
c. There will be a 110cf environmental chamber and 96 sf walk-in fume hood inside the lab. They may go inside the one of the PE work bench area to save space.
d. The PE work bench areas need to be enclosed and the walls need to be designed to attenuate noise in each work bench area, mainly generated from the high frequency (10-20kHz) harmonic currents in the LC loads/filters.
e. Each PE work bench area require large rollup/overhead door.
f. The HIL and equipment development area can only have partition walls.
g. The HIL area mainly houses two Opal-RT devices each of which are in 19" rack. Additional bench spaces are required for this area to set up converters, computers etc.
h. The equipment development area will have a work bench with adjustable heights, hood with bright lighting, utility connections and snorkel for exhaust.
i. The equipments area is to be used for putting various devices such as grid simulators, DC power supplies, AC and DC load banks, configurable L-C filters, and isolation transformers.
j. The lab will have ability to run tests on various equipments: AC and DC power supplies; several rack mount power electronic devices; load banks etc.
k. The main door to the lab shall be large enough (roll-up type) to load/unload equipments and test articles.
l. The laboratory shall be sized to accommodate all planned equipment and up to 3 large test articles (i.e. 100kW inverters).

3. **Casework:** All shall be removable and reconfigurable

a. Twelve (12) lineal feet of 8′ tall storage **cabinets**
b. **1**00 lineal feet of bench table top
c. Overhead cable tray, removable and reconfigurable
d. 100 lineal feet of under bench storage
e. 50 lineal feet of wall cabinets (above bench)
f. Two (2) sinks
g. One (1) 22 gallon corrosive storage cabinet 35" w X 22" d X 35"tall
h. One (1) 22 gallon flammable storage cabinet 35" w x 22" d x 35" tall
i. One (1) gas cabinet for two small cylinders

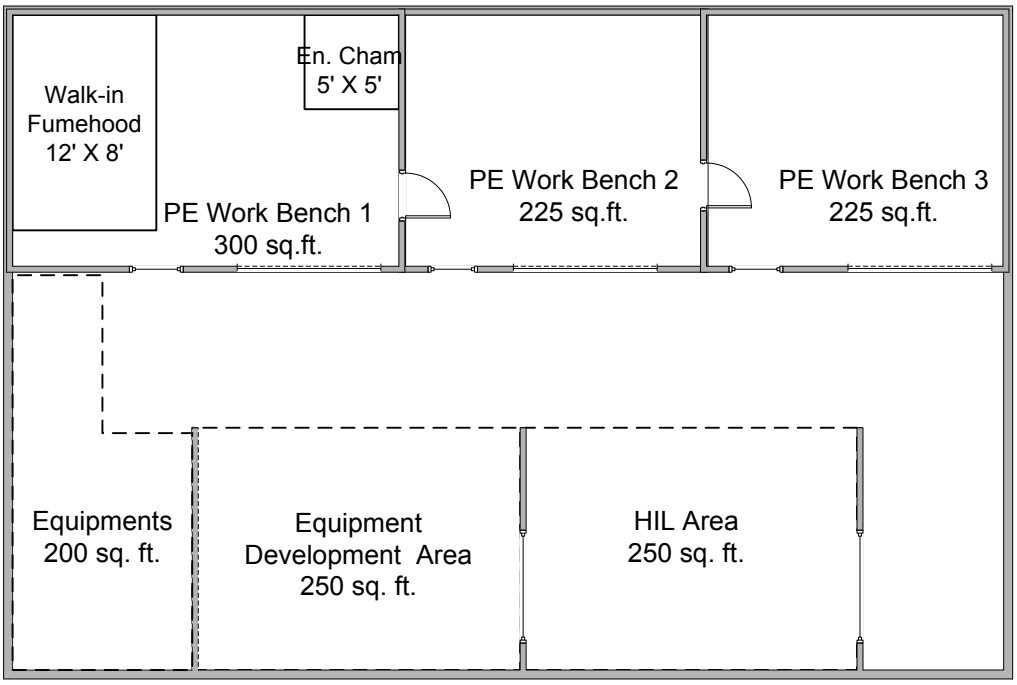

Example of floor plan for power electronics lab

4. Examples and Pictures

Below are pictures of from the current power electronic devices at NREL-DERTF. These are meant to be representative examples of similar equipments.

Various prototype power electronics converters wall-mounted

Elgar SW 15750 grid simulator

15kVA isolation transformer

Prototype power electronics in a 19" rack

15kW commercial PV inverter with disconnects

5. **Adjacencies and Room Connections**
   a. Critical Adjacencies: AC/DC REDB, Instrument Development Lab. This lab can be located on the second floor. Make sure the structure can support various devices that are heavy (see equipment list)
   b. The power electronics lab shall have electrical connections to the REDB.
   c. Alcove or partition arrangements should be made in the lab to allow for individual experiments to be coordinated off and isolated from view and possible noise issues.

6. **Laboratory Requirements**

   a. General
      i. Overhead ceiling, mezzanine or interstitial space options for running common services should be considered as to preserve laboratory space for experiments.
      ii. The lab must be very flexible. The time spent in experiment setup is greater than the testing itself. Design of labs should stay away from dependence on ladders for access to utilities; mini-scissor lifts would be better.
      iii. Enough spaces should be provided between different lab equipments such as grid simulators, DC supply, and loads etc. so that the manufacturer specified ventilation can be maintained.
      iv. The lab must have five separate operational areas: 3 power electronics (PE) work bench areas, one hardware-in-loop (HIL) area and one equipment development area. (Refer to the example floor plan).
      v. At each of these five operational areas, the following electrical, cooling, gas, and mechanical resources are required:
         - ESIF AC research bus
         - ESIF DC research bus
         - Facility electrical power: Each research areas at least have 2 outlets for 480 Vac, 208 Vac, 240 Vac and 6 outlets of 120Vac
         - Snorkels over work benches
         - Special fire protection system, provide a pre-action system to save electrical equipment.
         - Connection for hydrogen pipe, process cooling (ice water chiller), compressed air
         - LAN connections (4)
      vi. In addition to the resources and facility connections required at each operational area, the power electronics lab requires the following resources to be available at several points within the lab. These can either be installed in distributed locations in the lab, or can be integrated into select sub-bay resource drops :
         - Facility electrical power
         - Facility compressed air
         - Facility natural gas
         - REDB for connecting different resources loads etc.
      vii. There will be a 110cf environmental chamber and 96 sf walk-in fume hood inside the lab. They may go inside one of the PE work bench area to save space.
   b. Electrical
      i. This lab will need both facility power and connections to the Research Electrical Distribution Bus (REDB). The REDB is described in section 5.3.10.2A.
      ii. The lab requires several utility AC power connections at 480 Vac, 208 Vac, 240 Vac and 120 Vac. Facility power will need to be of adequate size to power the planned research equipments. Special power requirements may be required for 250kW DC power supply.
   c. Mechanical
      i. This lab needs Snorkels over work benches to exhaust fumes, process cooling (ice water chiller), compressed air
      ii. This lab will have large thermal loads from equipment that will be met with a laboratory-wide or facility-wide liquid cooling system that dumps heat to the outside.

d. Fuels
   i. The lab will have hydrogen research fuel lines (RFL). The requirements for the RFL are covered in Section 5.3.10.2B.
   ii. Test articles will require air supply, exhaust and in some cases chilled water cooling.

7. Finishes and Materials

a. The floor will have an acid resistant finish to facilitate cleanup of accidental spills (i.e. battery acid).
b. The lab floor needs to withstand heavy equipment; may require additional reinforcing/thickness or a structural slab.
c. The walls will be finished in a way to provide a surface for mounting research equipment, facilities connections to power and cooling, and gas ventilation. The walls shall be designed to attenuate noise generated in the each testing area, mainly the high frequency (10-20 kHz) harmonics from converters.
d. Butcher block wood countertops are appropriate for all benches serving electronics.
e. Ceiling: open to structure is acceptable
f. Minimum of one roll-up door for transporting equipments: 16' wide x 16' high [Main Door]

8. Hazards and Special Needs

a. High voltage and high current electricity.
b. High frequency noise from test articles.
c. Exhaust ventilation for test articles shall be provided
d. Effective heat management for the electrical devices.
e. This area shall be sprinklered on pre-action system.
f. Hydrogen (detection required)

9. Equipment List:

Quant.	Item Name	Make & Model	Size & Weight (w x d x h)	Mechanical	Electrical	Ventilation / Utilities	Research Bus Cnxn (AC/DC/none)	NREL or D-B Procure	NREL or D-B Install	Research Equip. Allowance	Notes
CERBS - Power Electronics Laboratory											
1	110 cf Envrion Chamber	Tenney	60"x60"x84"	Building coolant loop	480V 3ph		Ability for AC or DC conxn	D-B	D-B	Y	customized for bus connections
1	25KW, 30KVAR 3ph RLC load, load changes in steps	Customized Simplex 25KW Indoor	15"x30"x34" 200lbs		120V,15A	Cooling based on vendor suggestion		D-B	DB	Y	unit is on casters, indoor
1	25KW DC load bank	Customized Indoor	15"x30"x34" 200lbs			Cooling based on vendor suggestion		D-B	DB	Y	unit is on casters, indoor
1	Elgar AC power supply	existing - SW15750	19" rack 400lbs		208V 3ph,110V;			existing	D-B		
1	Elgar AC power supply	SW21000	19" rack 500lbs		208V 3ph,110V			D-B	D-B	Y	unit is on casters
1	+-250KW DC station	AV-900	See Storage Lab for Specs		240 3ph, 360A			D-B	D-B	Y	unit is on casters
3	California Instruments 3KW Eload 3091LD	existing - to be relocated	19" rack		110			exisiting	NREL		
1	15kW LC load 3ph (customized/reconfigurable as LC filter)	custom mfg TBD	4'x4'x4'		240			D-B	D-B	Y	chilled water connection, on rollers/casters
1	soft load transfer switch	ASCO	34"x20"x72" h 800lbs		110			D-B	D-B	Y	480V 4Pole, 600A, no-bypass, additional relays,on casters, indoor
1	AC Isolation Transformer, 5 kHz, 10 kW, single phase	custom mfg TBD	2' cu, 80kg					D-B	D-B	Y	portable to be mounted on casters.
1	AC Isolation Transformer, 10 kHz, 10 kW, single phase	custom mfg TBD	2' cu, 60kg					D-B	D-B	Y	portable to be mounted on casters.
1	AC Isolation Transformer, 60Hz, 25kW, 480/240/120 V primary and secondary, indoor	custom mfg TBD	TBD					D-B	D-B	Y	portable to be mounted on casters.
2	Opal RT hardware in loop system	OPAL RT, RT-LAB	2 X 19" rack		110			D-B	D-B	Y	
2	Laptop dedicated for Opal RT system	Dell			110			NREL	NREL		

Quant.	Item Name	Make & Model	Size & Weight (w x d x h)	Mechanical	Electrical	Ventilation / Utilities	Research Bus Cnxn (AC/DC/none)	NREL or D-B Procure	NREL or D-B Install	Research Equip. Allowance	Notes
CERBS - Power Electronics Laboratory (pg. 2)											
2	Full Matlab/Simulink and toolboxLicences	MathWorks			na			NREL	NREL		
2	Desktop computer with DAQ, DIO accessories	Dell/HP			110			NREL	NREL		
2	Yokogawa power analyzer	existing-PZ4000			110			exisiting	NREL		
1	Yokogawa power scope	existing-dl750			110			exisiting	NREL		
2	Yokogawa power scope	dl750			110			D-B	D-B	Y	
2	Power Analyzers	TBD			110			D-B	D-B	Y	
1	Omicron Relay Test Kit	existing	19" rack		110			existing	NREL		
1	Corrosive Storage							D-B	D-B		cabinet, 22gal, self closing doors
1	Flammable Storage							D-B	D-B		cabinet, 22gal, self closing doors
1	Fume Hood - walk-in		12'x8'	exhuastcapt ure hood	110V			D-B	D-B		provide plexi-glas panels
1	Gas Cabinets							D-B	D-B		
8	Lab Stools							D-B	D-B		

G. Smart Grid Components Lab

1. Mission and Activities

The Smart Grid Lab (SGL) supports the following programs: Office of Electricity (OE), Solar Energy Technology Program (SETP), Buildings Program, Wind Program, and work for other organizations. This laboratory houses programmable loads and programmable sources to emulate actual components and systems at real-world power levels. The laboratory also contains actual residential and commercial appliances and components to conduct smart grid and system integration studies using renewable and distributed energy components.

Research activities include testing interactions and compatibility of residential and commercial sized distributed and renewable energy systems with the electric grid and each other. The SGL will support researching a variety of operating configurations including: grid connected, stand-alone, microgrids, and hybrid power systems.

Tours of the laboratory would be accommodated by windows in adjacent halls that look into the laboratory. It is preferred that tour groups not enter the laboratory but be able to see what is going on inside for safety reasons.

2. General Information

a. 1,500 SF Smart Grid Lab
b. Ability to run tests on various lighter duty equipment in separate test areas consisting of : 1) main workspace 2) residential test area and 3) commercial test area
c. Test articles will be connected to the REDB connections for testing or tested in stand-alone fashion with local power sources or loads.
d. Access to high bay and/or loading dock via rollup doors capable of driving in a forklift with test articles.
e. The laboratory will be sized to accommodate all planned equipment.

3. Examples and Pictures

No similar, representative photographic examples are available at this time.

4. Adjacencies and Room Connections

a. The Smart Grid lab will be immediately adjacent to the High bay.
b. The Smart Grid lab will have electrical connections to the REDBHydrogen Systems Lab.
c. Alcove or partition arrangements should be made in the Smart Grid lab to allow for individual experiments to be coordinated off and isolated from view and possible noise issues.

5. Laboratory Requirements

a. General
   i. Overhead ceiling, mezzanine or interstitial space options for running common services should be considered as to preserve laboratory space for experiments.
   ii. The lab must be very flexible. The time spent in experiment setup is greater than the testing itself. Design of labs should stay away from dependence on ladders for access to utilities; mini-scissor lifts would be better.
b. Electrical
   i. This lab will need both facility power and connections to the Research Electrical Distribution Bus (REDB). The REDB is described in section 5.3.10.2A.
   ii. Facility power will need to be of adequate size to power the planned research equipment.
c. Mechanical
   i. This lab will have large thermal loads from equipment.

d. Fuels
   i. No fuels are anticipated in the Smart Grid lab.

6. Finishes and Materials

a. The floor will have an acid resistant finish to facilitate cleanup of accidental spills (i.e. battery acid).
b. Concrete slab floor needs to withstand heavy equipment and fork lift deliveries; may require additional reinforcing/thickness or a structural slab.
c. The walls will be finished in a way to provide a surface for mounting research equipment. The walls shall be of sufficient strength to mount lab devices.
d. Butcher block wood countertops are appropriate for all benches serving electronics.
e. Ceiling: open to structure is acceptable

7. Hazards and Special Needs

a. High voltage and high current electricity.
b. Noise and Vibrations from test articles.
c. Intake and exhaust ventilation for test articles will be provided
d. Test articles will require spill containment.
e. Explosion hazard ventilation required
f. This area shall be sprinklered on pre-action system.

8. Casework:

a. Twelve (12) lineal feet of 8' tall storage cabinets
b. Twenty four (24) lineal feet of bench table top
c. Overhead cable tray to allow hardware communication between devices in PS labs
d. Twelve (12) lineal feet of under bench storage
e. Twelve (12) lineal feet of wall cabinets (above bench)
f. One (1) corrosives storage cabinet
g. One (1) flammable storage cabinet, 45 gal, self closing doors

9. Equipment List:

Quant.	Item Name	Make & Model	Size & Weight (w x d x h)	Mechanical	Electrical	Ventilation / Utilities	Research Bus Cnxn (AC/DC/none)	NREL or D-B Procure	NREL or D-B Install	Research Equip. Allowance	Notes
CERBS - Smart Grid Components Laboratory											
1	+-250KW DC station	EV-900	See Storage Lab for Specs		240 3ph, 360A			D-B	D-B	Y	
1	250KW 480V to 250V Rectifier						AC	D-B	D-B	Y	used for EV-900
1	10Kw 1ph AC Load Bank				120V/240		AC	D-B	D-B	Y	20 programable 1ph loads
2	Residential Service and Breaker Panel set	custom			building mains		AC	D-B	D-B	Y	
2	Industrial Service and Breaker Panel set	custom			building mains		AC	D-B	D-B	Y	
1	Residential appliance test area	custom			connects to Residential service		AC	D-B	D-B	Y	120,240 1p
1	200 KW Motor Load Bank				120V/240		AC	D-B	D-B	Y	
1	150hp 3ph load bank				120V/240		AC	D-B	D-B	Y	1 and 3 ph up to 150 hp
1	Corrosive Storage							D-B	D-B		
1	Flammable Storage							D-B	D-B		cabinet, 45gal, self closing doors
1	Ice storage air water chiller	IceBear 30						D-B	D-B	Y	
2	Substation LAN for isolated Smart Grid data netwrk							D-B	D-B	Y	
1	NERC CIP Cyber Security appliance							D-B	D-B	Y	
1	Fiber Optical Ethernet system (isolated, for smart grid only)							D-B	D-B	Y	
4	IED (Intelligent Electronic Device, can be controlled by Smart Grid signals)							D-B	D-B	Y	
8	Lab Stools							D-B	D-B		

H. Instrument Development Lab

1. Mission and Activities

The Instrument Development Lab would function as the electrical and instrument shop for the ESIF. Staff from other groups within the ESIF will use this lab for instrument and data acquisition system development activities.

Activities include development, repair and troubleshooting of electronic equipment. Tasks include soldering components, assembling test equipment and systems and troubleshooting components and systems with test equipment.

2. General Information

a. 3,000 SF Instrument Development Lab
b. Will provide the ability to build and test small electronic assemblies – dataloggers, sensors, small circuits, etc.
c. Lab shall be designed around individual workstations with lockable storage cabinets or separate closets for different user groups. Common areas will be provided for large or common use equipment. Workbenches will have outlets and second level shelf for placement of scopes and other test equipment. (Similar to Electronics/Circuits lab classroom designs).
d. Easily accessed controlled area for storage of electrical components and supplies (includes parts bins, large wire storage rack 10AWG to 22AWG) of 300 SF area required.
e. Solder fume extraction devices will be installed at workstations. Prefer building integrated devices.
f. Does not require large door access
g. Does require specialty electrical service.

3. Examples and Pictures

Example Picture of a laboratory

4. Adjacencies and Room Connections

Primary adjacencies: Power Electronics Lab, ZEB. Secondary: Smart Grid Lab, High Bay, Control Room, Energy Storage, and Hydrogen Systems.

5. **Laboratory Requirements**
   a. General
      i. Overhead ceiling, mezzanine or interstitial space options for running common services should be considered as to preserve laboratory space for experiments.
      ii. Some related labs might stack above others. Instrument Development and Power Electronics could go on a second floor.
      iii. The lab must be flexible and reconfigurable (e.g. from a electronics lab to a wet laboratory)
   b. Electrical
      Must have both facility power and REDB electrical connections
   c. Mechanical
      This lab requires special ventilation for solder fume extraction.
   d. Fuels – there will be no fuels used in this laboratory.
6. **Finishes and Materials**
   a. The floor will have a chemical resistant finish to facilitate cleanup of accidental spills (i.e. acid based soldering flux).
   b. The floor will be made of static dissipative material.
   c. Butcher block wood countertops are appropriate for all benches serving electronics. Epoxy countertops are acceptable as additional built in workspaces.
   d. Ceiling shall be standard laboratory finish.
7. **Hazards and Special Needs**
   a. Needs: Accessibility to building ground grid for signal grounds and static dissipation systems.
   b. Needs: Exhaust ventilation for solder fume hoods will be provided
   c. Hazards include electrical soldering and the small quantities of chemicals related this activity (flux remover, contact cleaner, iso-alcohol,etc)
   d. 120V outlet stripes along table top benches
8. **Casework:**
   a. Twelve (12) lineal feet of 8′ tall storage cabinets
   b. Thirty six (36) lineal feet of bench table top
   c. Overhead cable tray
   d. Twelve (12) lineal feet of under bench storage
   e. Twelve (12) lineal feet of wall cabinets (above bench)
   f. One (1) corrosive storage cabinet
   g. One (1) flammable storage cabinet
9. **Equipment List:**

Quant.	Item Name	Make & Model	Size & Weight (w x d x h)	Mechanical	Electrical	Ventilation / Utilities	Research Bus Cnxn (AC/DC/none)	NREL or D-B Procure	NREL or D-B Install	Research Equip. Allowance	Notes
CERBS - Instrument Development Laboratory											
1	Flammables cabinet (self closing doors)							D-B	D-B		
1	Parts Bin							D-B	D-B		
1	Wire Storage Rack							D-B	D-B		
1	Corrosive Storage							D-B	D-B		cabinet, 22gal, self closing doors
4	Lab Stools							D-B	D-B		

I. Hydrogen Systems Laboratory (HSL)

1. Mission and Activities

The Hydrogen Systems Laboratory (HSL) at NREL's ESIF is a comprehensive and flexible laboratory for testing equipment that produces and uses hydrogen. This lab supports the Office of Electricity (OE) Program, DOE-EERE Hydrogen, Fuel Cells & Infrastructure Technologies Program, Wind Program, and Solar Energy Test Program (SETP) as well as supports activities and research for other organizations. The HSL will be capable of evaluating and testing the hydrogen equipment, systems and technologies of the future. It provides space and resources for comprehensive testing and demonstration of hydrogen systems. The HSL is closely coupled with the hydrogen work conducted in the Outdoor Test Area (OTA) for hydrogen storage, vehicle fueling stations, large hydrogen systems equipment, and high-noise equipment. The major activities in this lab will include the testing of:

a. HSL Control Room to monitor experiments
b. Electrolysis of water to produce hydrogen using various electrolysis technologies
c. Consumption of hydrogen in fuel cells to produce electricity
d. Combustion of hydrogen in internal hydrogen combustion generators to produce electricity or to do mechanical work
e. Compression of hydrogen to high pressures (350 – 800 bar) for storage or transport
f. Delivery of vehicle fuel cell-grade hydrogen via hydrogen fuel dispensers for fuel cell vehicles
g. Storage of hydrogen
h. Investigation and development of hydrogen system design and sizing for hydrogen economy infrastructure

Tours of the laboratory would be accommodated by windows in adjacent halls that look into the laboratory. It is preferred that tour groups not enter the laboratory but be able to see what is going on inside for safety reasons.

2. General Information

a. 5000 sq ft HSL laboratory area (includes 500 ft^2 control room and300 ft^2 storage room, H2 Sub-Bays 1 & 2 @ 100 SF each, H2 Sub-Bays 3 & 4 @ 250 SF each, and Sub-Bay 5 @ 400 SF).
b. 3000 sq ft in the Outdoor Test Area should be immediately adjacent to the HSL.
c. Required to house and run tests on various large, heavy equipment such as electrolyzers, fuel cells, compressors and storage tanks. These will be located outside of the lab building (in the HSOTA). Smaller electrolyzers, fuel cells and compressors may be located inside the laboratory.
d. Required access to outside via large rollup door capable of driving in a large delivery truck and forklift.
e. The HSL footprint area shall be adjusted to easily accommodate all required and expected equipment.
f. The lab design shall take into account noise abatement from several fans, pumps and compressors that operate in the HSL.

3. Examples and Pictures

Example of Alkaline Electrolyzer Unit (40 kW Teledyne Energy Systems unit shown)

Example of Alkaline Electrolyzer Power Supply Unit (40 kW Teledyne Energy Systems unit shown)

Example of PEM Electrolyzer Unit (7kW Proton Energy Systems units shown)

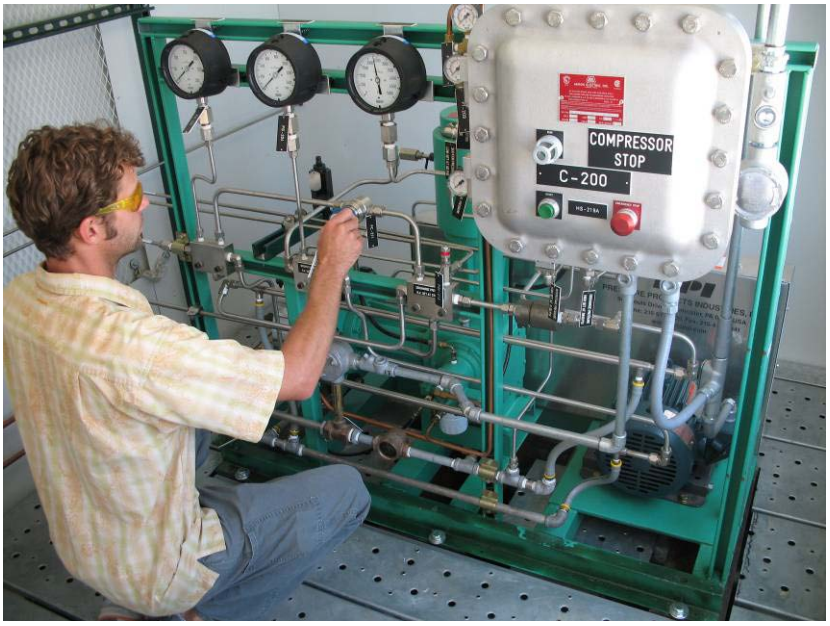

Example of Hydrogen Compressor Unit (3 kW 3500 psi Pressure Products unit shown)

Example of Hydrogen Storage Tanks (24 feet long, 3500 psi, 120 kg H2 tanks shown)

Example of Hydrogen Internal Combustion Generator Unit (60 kW Hydrogen Engine Center unit shown)

Example of 350 Bar Hydrogen Dispenser and Hydrogen Fuel Cell Vehicle

4. Adjacencies and Room Connections

a. The HSL shall be located as close as possible to the hydrogen section of the Outdoor Test Area.
b. The HSL shall be located as close as possible to the following ESIF labs (in approximate order of importance)
   i. High Bay Test Area
   ii. Energy Storage Laboratory
   iii. Power Electronics Laboratory
c. Alcove or partition arrangements should be made isolated from view and possible noise issues.
d. There will be a large rollup door for outside access to the HSL.
e. Provides access to the REDB, RFL, and RHC connections

5. Laboratory Requirements

a. General
   i. The HSL will have a control room (500 sqft) within the HSL. The control room will not have to be (class I, Div 2, Group B) and will be isolated from the rest of the HSL. There should be windows that allow operators in the control room to see all areas of the rest of the HSL.
   ii. The HSL test bay shall be designed to meet NEC Articles 500 and 501 hazardous classification (Class I, Div.2) and relevant NFPA standards.
   iii. Various safety assurance systems are required. The major equipment for safety systems included several UV/IR flame detectors, heat/rate-anticipation detection, combustible gas detectors, emergency stop interlocks on all equipment, and lab and facility level emergency stop interlocks.
   iv. The HSL will be arranged in such a way to accommodate several test articles of different sizes and resource requirements. In the HSL, approximately 6 test sub-bays are identified:
   v. At each sub-bay, the following electrical, cooling, gas, and mechanical resources are required:
      - Research Electrical Distribution Bus (REDB)
      - Facility utility electrical power: 480 Vac, 208 Vac, 240 Vac and 120 Vac 10A. 480 Vac shall be 50 kva in Sub-Bays 1 & 2, 200 kva in 3 & 4 and 500 kva in 5. 208 Vac shall be 20 kva in Sub-Bay 1. 240 Vac shall be 20 kva in Sub-Bay 2.
      - Hydrogen gas vent to atmosphere

- Oxygen gas vent to atmosphere
- Research hydrogen fuel line (RFL) (for input or output)
- Remote PLC (programmable logic controller) including analog input/output and digital input/output expansion slots; the remote PLCs are all tied back to a main hydrogen systems PLC
- ASTM Type II de-ionized water
- Fluid cooling loop that ejects heat outdoors (glycol-based)
- Connection point to building ground grid

vi. In addition to the resources and facility connections required at each sub-bay, the HSL requires the following resources to be available at several points within the lab. These can either be installed in distributed locations in the lab, or can be integrated into select sub-bay resource drops :
- Facility compressed air
- Facility natural gas
- Compressed nitrogen

vii. Each test sub-bay will have inserts in the floor to provide berms for spill containment that allow researchers too quickly and easily install secondary fluid containment around each sub-bay. This concept uses the floor as the secondary containment, with configurable dams that can be installed around them for fluid containment. The secondary containment shall be compatible with KOH in high concentrations and will be designed to contain foreseeable maximum equipment displacement.

viii. Overhead ceiling, mezzanine or interstitial space options for running common services should be considered as to preserve laboratory space for experiments.

ix. The lab must be very flexible. The time spent in experiment setup is greater than the testing itself. Design of labs should stay away from dependence on ladders for access to utilities; mini-scissor lifts would be better.

b. Electrical
   i. This lab will need both facility power and connections to the Research Electrical Distribution Bus (REDB). This includes 4 AC bus ways running through the HSL and 4 DC bus ducts. Drop or connection points to the REDB will be available for each sub-bay as close as possible to each sub-bay.
   ii. The HSL requires several utility AC power connections at 480 Vac, 208 Vac, 240 Vac and 120 Vac. Each sub-bay as described above will require at least two of these voltage levels. Facility power will need to be of adequate size to power the planned research equipment. Special power requirements may be needed for the large sub-bays.
   iii. HSL controls are an important aspect of the success of the laboratory. Each sub-bay in the HSL has a remote PLC unit with analog and digital, expandable I/O.
   iv. Class I, Div. 2, Group B electrical wiring is required.

c. Mechanical
   i. Special ventilation is required in the HSL. A critical exhaust fan expelling laboratory air to the outside must be running at all times in order for any hydrogen equipment to operate. In addition. Provide nitrogen service for purging purposes.
   ii. This lab will have large thermal loads from equipment that will be met with a laboratory-wide or facility-wide liquid cooling system that dumps heat to the outside.

d. Fuels
   i. The HSL is the source for the hydrogen RFL (research fuel line).
   ii. Fuels anticipated for use in the HSL are natural gas and hydrogen.
   iii. Test articles will require air supply, exhaust and spill containment.

6. **Finishes and Materials**

   a. Epoxy floor is to be provided for the HSL. The floor shall have a resistance to acid and base solutions to facilitate cleanup of accidental spills (i.e. battery acid, potassium hydroxide, or distilled water). Berm at perimeter.
   b. The HSL needs a concrete slab sub-floor to withstand heavy equipment and semi-truck deliveries. This may require additional reinforcing/thickness or a structural slab.
   c. The walls shall be finished in a way to provide a surface for mounting research equipment, facilities connections to power and cooling, and gas ventilation. The walls shall be of sufficient strength to mount lab devices. The walls may need to be designed to attenuate noise generated in the sub-bay testing area in the HSL.
   d. A ceiling open to structure is acceptable.
   e. Minimum of one garage door: at least 16-18′ wide x 16′ high

7. **Hazards and Special Needs**

   a. There is the potential for release of hydrogen in the HSL. Both UV/IR flame detection and combustible gas sensors are required. Personnel and equipment safety interlocks and emergency-stop access are required.
   b. Corrosive liquids (base) are present in alkaline electrolyzers.
   c. High pressure hydrogen will be present both in the HSL
   d. The HSL will be determined to be Class I Division 2 hazardous space.
   e. High voltage and high current AC and DC electricity are present in the lab. Voltages are limited to 600 Vac and 600 Vdc.
   f. Noise and Vibrations from test articles are present in the HSL.
   g. Laboratory ventilation fans must be operational during operation of test articles
   h. Test articles will require secondary containment and spill containment. This is addressed by the configurable barriers around the sub-bays as previously described.
   i. Explosion hazard: Provide ventilation, hydrogen and oxygen vent to outdoors
   j. Designed to meet NEC articles 500 and 501 hazardous classification (Class 1, Div 2, Group B)
   k. 4 UV/IR detectors and heat/rate anticipation detection
   l. Laboratory must be designed for storage of fuel cell or hybrid fuel cell vehicles containing pressured hydrogen fuel tanks at a pressure of 11,000 psi. Vehicles may house batteries made of nickel metal hydride or lithium battery technologies.
   m. The high pressure hydrogen compression and storage needs to be sited or protected to eliminate the potential for off-site consequences.

8. **Casework:** Shall be removable and reconfigurable

   a. Thirty (30) lineal feet of 8′ tall storage cabinets
   b. Sixty (60) lineal feet of bench table top
   c. Overhead cable traySixty (60) lineal feet of under bench storage
   d. Sixty (60) lineal feet of wall cabinets (above bench)
   e. Two (2) sinks
   f. One (1) 45 gallon corrosive storage cabinet (43″ w X 18″ d X 65″ tall)
   g. One (1) 22 gallon flammable storage cabinet (35″w X 22″ d X 35″ tall)
   h. One (1) gas cabinet to hold two cylinders
   i. Each Sub-Bay shall have bench area for standing (or sitting on a stool) lab researcher.

9. **Equipment List:**

Quant.	Item Name	Make & Model	Size & Weight (w x d x h)	Mechanical	Electrical	Ventilation / Utilities	Research Bus Cnxn (AC/DC/none)	NREL or D-B Procure	NREL or D-B Install	Research Equip. Allowance	Notes
CERBS - Hydrogen Systems Laboratory											
2	PEM Electrolyzer	HOGEN 40 S series; existing - to be relocated	3'x3'x4' 500 lbs.		208V(10 KVA)	DI Water, H_2 Vent, O_2 Vent	AC and DC	existing	D-B		plumbed same as test area but permanent install not part of "test areas"
1	Hydrogen high pressure compressor 240 bar (3500 psi)	Pressure Products (10 Nm^3/hr)	6'x2'x4' 500 lbs.		480V(5 kVA)	Liquid Cooling, H_2 Fuel Line from Electrolyzers, H_2 Fuel Line to 3500# Storage Tank		existing	D-B		
1	Alkaline Electrolyzer and power supply (6 Nm^3/hr)	Teledyne Energy Systems	10'x5'x3' + 4'x6'x4'		480V(50 kVA)	DI Water, H_2 Vent, O_2 Vent, Liquid Cooling	AC and DC	existing	D-B		currently in operation at Wind2H2 project at NWTC-DERTF, plan to move unit to ESIF
1	PEM Electrolyzer (60 Nm^3/hr)	HOGEN Series - Proton Energy Systems	10'x10'x10' 15,000 lbs.		480V(600 kVA)	Liquid Cooling, H_2 Vent, O_2 Vent, DI Water	AC and DC	D-B	D-B	Y	plumbed same as test area but permanent install not part of "test areas"
1	Alkaline Electrolyzer and power supply (60 Nm^3/hr)	Hydrogenics HySTAT-A-60 indoor	Generator = 12,000 lbs, (14'x6'x9') and Power = 2500 lbs, (8'x3'x7')		480V(500 kVA)	Compressed N_2, Liquid Cooling, H_2 Vent, O_2 Vent, DI Water	AC and DC	D-B	D-B	Y	plumbed same as test area but permanent install not part of "test areas"
1	Fuel Cell (30 kW)	Hydrogenics	10'x2'x7'		480V(50 kVA)	H_2 Research Fuel Line, Liquid Cooling	AC	D-B	D-B	Y	housed in the Class I, Div.2 test area.

Quant.	Item Name	Make & Model	Size & Weight (w x d x h)	Mechanical	Electrical	Ventilation / Utilities	Research Bus Cnxn (AC/DC/none)	NREL or D-B Procure	NREL or D-B Install	Research Equip. Allowance	Notes
CERBS - Hydrogen Systems Laboratory (pg. 2)											
1	Gas Chromatograph		Desktop 1'x1'x2'		120V-10A			D-B	D-B	Y	
1	Ion Chromatograph	existing - to be relocated from DERTF	Desktop 1'x1'x2'		120V-10A			existing	D-B		Dionex
1	Main PLC Unit	Siemens	~4' x 6' x 2' connected to sub-bays via Profi-bus		120V-10A			D-B	D-B	Y	
2	Desktop Computer		interfaces to the PLC and other lab controls and monitors		120V-10A			NREL	NREL		
1	Acoustic Emission testing system	PAC PCI-8 AE			120 V-10A			D-B	D-B	Y	for testing storage tank integrity
1	Flammable Storage		4'w x 2' h					D-B	D-B		
1	Gas Cabinets							D-B	D-B		
1	Corrosive Storage							D-B	D-B		cabinet, 22gal, self closing doors
6	Lab Stools							D-B	D-B		

J. Roof Testing Area:

1. Mission and Activities

The Roof Test Area is a space located on the outside and top of the building to provide a space for various experiments. Expected testing includes PV arrays, concentrated solar systems, solar hot water heaters, heating/ air conditioning units, radiometers.

2. General Information

a. The total area of the roof test area will be 6,000 sq ft. (4,000 sq ft to renewable energy testing and 1,000 sq ft to building technologies)
b. The area shall be free of shadows and obstructions.
c. The area will have access to the 100kW research PV array, although the array can be integrated into the building façade. The PV array shall have provisions for switching between normal grid connected mode and a test mode that would take power from the PV array to the REDB.

3. Examples and Pictures

The following is a picture of an existing testing PV array.

NREL Testing PV Array

4. Adjacencies and Room Connections

a. It would be preferable if the roof test area was located above the high bay laboratory with access points between the labs and above the power electronics lab
b. The buildings test area can be on top of the commercial buildings high bay test lab.

5. Laboratory Requirements

a. **General**

A method to bring equipment to the roof shall be provided.

b. Electrical

Connections to the REDB shall be provided

c. **Mechanical:** Reserved

d. **Fuels:** Reserved

6. **Finishes and Materials**

   ESIF roof membrane with added protection for foot traffic

7. **Hazards and Special Needs**

   a. High voltage
   b. Exposure to elevation will be accommodated by a properly sized parapet wall.

K. Machine Shop

1. Mission and Activities

The Machine Shop is the primary location for fabrication and modification of equipment, tools and systems by qualified ESIF labs staff using typical machine shop equipment (lathes, mills, drill presses, saws, etc). This machine shop lab supports the labs within the ESIF.
Activities include the fabrication of precision small parts, cutting and fitting of large assemblies (mounts, racks, fixtures) with ability of maneuvering and cutting of 20' long raw stock (metal, tubing, unistut, 80/20, etc) and welding of large assemblies to be used in the High Bay VSHOT lab and other labs.
Users will be qualified laboratory staff performing tasks requiring machine shop equipment. This lab does not provide the level of service of NREL's fully staffed Instrument Machine Shop specifically tasked for larger more complex design build projects.

1. General Information

a. 1,500 SF Machine Shop
b. Consists of :
   i. Work Area 1- main workspace for specified equipment
   ii. Work Area 2- Lockable caged area (+-300 SF for stock, rolling tool boxes, spare parts storage, flammables cabinet, fasteners bins, etc)
   iii. Work Area 3- Cleaningarea with two sink basins sized for mop bucket and small equipment degreasing/cleaning.
   iv. Work Area 4- welding area with snorkel
c. Provides basic machine shop equipment so that qualified lab users can fabricate their own equipment and tools quickly and efficiently.

2. Casework:

a. Twelve lineal feet of 8' tall storage cabinets
b. Twenty four lineal feet of bench table top
c. Overhead cable tray
d. Twelve lineal feet of under bench storage
e. Twelve lineal feet of wall cabinets (above bench)
f. One sink, stainless steel, two basins, large enough for mop bucket in either basin.
g. One (1) 45 gallon flamable storage cabinet

3. Laboratory Requirements:

a. The laboratory will be sized to accommodate all planned equipment and workspaces/areas.
b. Machine shop tools can weigh up to 5900 lbs (typically only 1 of this size in this lab) but 3-5 other machines 500-2000 lbs will be in this shop. Floor must be designed for these loads. Anchor equipment to floors or bench tops (as appropriate). Lab access must allow moving machines in and out of shop (rarely). Loading dock accessible needed for bring in materials for cutting down or assembly before moving into labs. Central location for getting fabricated equipment to and from labs including highbays.
c. Provide exhaust and dust collection system for grinders, disc sanders etc.
d. All Machine Shop equipment shall be equipped with the required power transmission and point of operation guarding.

4. Electrical Requirements:

a. Shop requires electrical supply commensurate with specified equipment. This may include single and three phase supply as well as 120V outlets for portable electric tools - prefer raceways 42" above floor along walls. All 3ph power must have available or be easily retrofitted for neutral and ground (i.e. 5 wire)

b. The electrical design shall not have all electric circuits adjacent on raceway, alternate on wall to avoid overloading single circuit when two large loads are placed on adjacent outlets.
c. Equipment shall be supplied power from either wall outlet or ceiling drops depending on location within shop (e.g. caster mounted drop arm band saw would require a ceiling drop). Any disconnects on walls that require 36" clearance should be designed to avoid taking up critical shop floor space.
d. Stationary cord connected and hardwired single and three phase machines will be installed with anti-restart devices.
e. Lighting will be high CRI and bright throughout shop to aid in detail work

5. Examples and Pictures

a. Below are pictures of machine shops at NREL and other locations. These are meant to be representative examples of similar rooms or equipment.

Example of small machine shop at NREL's S&TF with mills, bandsaw, drill press, wooden top worktable – other requested equipment not pictured (note electrical cord reel drops and compressed air drops at equipment for cleaning).

Example of a machine shop/welding area off main high bay design with rollup door, snorkel and stationary equipment (note extremely poor lighting in this shop).

6. Adjacencies and Room Connections

a. Immediately adjacent to or unhindered access to the VSHOT, High Bay Main labs and loading dock is required. Other ESIF labs will also have relatively easy access to the machine shop via man doors. Rollups are acceptable as long as a separate, parallel man door is provided.
b. The welding area shall be segregated from the remainder of the shop to control flash burn potential and will be equipped with fixed ventilation (welding stations/rear slot and canopy) in addition to snorkels.

7. Laboratory Requirements

a. General
   i. The lab must be able to serve the user efficiency and safely. It must be able to be reconfigured with the introduction of new or relocation of existing equipment to meet users needs.
b. Electrical
   i. Facility power will need to be of adequate size and distribution to power the planned equipment.
   ii. Power serving the planned equipment shall be designed to allow expansion and or relocation of planned equipment.
   iii. Standard wall outlets shall be provided in addition to planned equipment power requirements.
   iv. Stationary cord connected and hardwired single and three phase machines will be installed with anti-restart devices
   v. Electrical disconnects shall be located according to NEC but be placed to avoid consuming valuable shop floor and wall space for 36" clearance.
   vi. Lathe and Mills will require electrical disconnect that allow for locking out the equipment.
c. Mechanical
   i. Variable exhaust ventilation for welding fumes shall be provided with moveable snorkel with 16' radius
   ii. Provide fixed ventilation for welding areas
d. Fuels – no liquid fuels are anticipated in this lab.

8. Finishes and Materials

a. The floor shall be durable enough to avoid damage during moving of heavy machine equipment but comfortable enough to stand on for long periods (e.g. tile and not concrete). Floor finishes near the welding area must be rated for such uses.
b. Walls and floors must be impervious to and allow easy cleaning of machine oil and lubricating fluids that could potentially splatter from machines.
c. Walls shall be a light color to help facilitate the lighting requirements.
d. Floors shall be non-combustible.
e. Ceiling: open to structure is acceptable

9. Hazards and Special Needs

a. Hazard: Hot work (welding cutting brazing).
b. Hazard: machinery, machine tools.
c. Special needs: variable exhaust ventilation for welding fumes shall be provided with moveable snorkel with 16' radius
d. Special needs: Space and brackets shall be provided to restrain full and depleted welding tanks (Oxygen,Acetylene) and other shielding gas tanks (e.g. Argon). Oxygen and Acetylene (flammable) cylinder storage must comply with requirements set forth in 10 CFR 1910, 253(b).

10. Equipment List:

Quant.	Item Name	Make & Model	Size & Weight (w x d x h)	Mechanical	Electrical	Ventilation / Utilities	Research Bus Cnxn (AC/DC/none)	NREL or D B Procure	NREL or D-B Install	Research Equip. Allowance	Notes
CERBS - Machine Shop											
1	CNC Mill	HAAS TM-3P Toolroom Mill	11.5'x9.5' 5900lbs	4 scfm, compressed air (100 psi)	3p, 230V, 30 amps			D-B	D-B	Y	
1	Knee Mill	Bridgeport Mill 2J-head w/ 2 axis power feed+DRO	8.2'x5.3' 1950lbs	Air	3ph, 230V, 30 amps			D-B	D-B	Y	compressed air (100 psi) drop from ceiling
1	18" tool room lathe	Jet 321960	6'x3'	Air	3ph, 230V, 30 amps			D-B	D-B	Y	100 psi air drop from ceiling. Needs work area of 12'x6' 2000lbs
1	TIG Welder	Lincoln K2618-1	3'x2' 181 lbs	Air	1ph, 240,208V			D-B	D-B	Y	compressed air (100 psi) drop from ceiling
1	wheeled 8" drop arm bandsaw	Kalamazoo H 235 + caster kmt-ac230	6.7"x2.8' 500lbs		1ph, 120V			D-B	D-B	Y	equipment to be mounted on caster kit
1	10" pedestal grinder	Baldor 1022W	2'x2' 200lbs		1ph, 230V			D-B	D-B	Y	
1	sanding belt disc combo + stand	Wilton 4202A	2'x2.5' 400lbs		1ph, 120V			D-B	D-B	Y	
1	Bench Manual Shear - 20"	Jet SBR-30N						D-B	D-B	Y	
1	Metal welding table (Platen + Stand+accessories)	Atlas Welding#5050 PLATEN,#5050 STAND	5'x'5'x30" 2000 lbs		115 V and 1ph 208 or 240					Y	115 V for portable power tools: located near welding table along wall. 1ph 208 or 240 near welding table for portable welder plug. Moveable exhaust hood, 16' range w/cont'd ventilation rate.
1	20" Vertical Bandsaw	Doall CMI290166		Air	3ph, 230V			D-B	D-B	Y	compressed air (100 psi) drop from ceiling
1	Tool box	Kennedy #360B,285B,297B						D-B	D-B	Y	
1	Flammables cabinet (self closing doors)							D-B	D-B		
1	Drill Press 20"	Clausing 20" #2274	2'x3' 390lbs	Air	3ph, 208V			D-B	D-B	Y	compressed air (100 psi) drop from ceiling
6	Lab Stools							D-B	D-B		

L. Energy Storage Lab

1. Mission and Activities

The Energy Storage Laboratory (ESL) provides space, resources and systems for testing energy storage component and system performance when integrated with renewable energy electrical systems. Energy storage components include batteries of various chemistries, super- and ultra-capacitors, flywheels, superconducting magnetic energy storage, ice storage, thermal storage, and compressed air. Testing, evaluation and development done in the ESL supports Office of Electricity (OE) and DOE Programs, the Solar Energy Technology Program (SETP), the Buildings Program, the Wind Program, and work for other organizations.

Research activities include testing and evaluating interactions, performance, and compatibility of different stationary energy storage systems when integrated with distributed and renewable energy systems and the electric grid. The ESL will work closely with the power electronics lab to integrate, evaluate and control electrical energy storage dispatch systems for both commercial and residential applications. The lab will allow researchers to build up large stationary energy storage systems and integrate them with both simulated and actual renewable energy electrical distribution systems.

Tours of the laboratory would be accommodated by windows in that look into the laboratory. It is preferred that tour groups not enter the laboratory but be able to see what is going on inside for safety reasons.

2. General Information

a. 4,000 ft^2 floor space required for the ESL
b. 8 environmental chambers with various required utility, facility, and research electricaldistribution bus, fuel and cooling interfaces comprise testing sub-bays in the ESL
c. The ability to deliver large units to the interior of the lab is required, either from outside access via an overhead door or an overhead door to the high bay area
d. The laboratory will be sized to accommodate all planned equipment
e. A good partial example of the stationary battery testing laboratory envisioned is the COBASYS testing facility: http://www.cobasys.com/company/battery_systems.shtml

3. Casework:

a. Forty (40) lineal feet of 8′ tall storage cabinets
b. One hundred (100) lineal feet of bench table top
c. Overhead cable tray: allow hardwire communication between devices in PS labs
d. One hundred (100) lineal feet of under bench storage
e. Fifty (50) lineal feet of wall cabinets (above bench)
f. One (1) sink
g. One (1) corrosive storage cabinet
h. One (1) flammable storage cabinet, 45 gallon, self-closing doors

4. Examples and Pictures

Below are example pictures of some of the equipment that might populate the ESL. These are meant to be representative examples of similar rooms or equipment.

Lead Acid Battery Packs

Superconducting Magnetic Energy Storage Unit

Hybrid Ice Storage and Air Conditioning Unit

5. **Adjacencies and Room Connections**
   a. The ESL will be immediately adjacent to the outdoor test area which have large flywheels and batteries.
   b. The ESL will be adjacent to the high bay area and to the power electronics laboratory.
6. **Laboratory Requirements**
   a. General
      i. The lab must be very flexible. The time spent in experiment setup is greater than the testing itself. Design of labs should stay away from dependence on ladders for access to utilities; mini-scissor lifts would be better.
      ii. The ESL shall have access the REDB.
      iii. Open alcove or sub-bay arrangements will be made to allow for individual experiments to be coordinated off. Sub-bays will contain environmental chambers with all required facility, utility, electrical and mechanical connections.
      iv. At each sub-bay, the following electrical, cooling, gas, and mechanical resources are required:
         - REDB

- Utility electrical power as required for environmental chambers
- Hydrogen gas vent to atmosphere
- Fluid cooling loop that ejects heat outdoors (glycol-based)
- Connection point to building ground grid

v. Overhead ceiling, mezzanine or interstitial space options for running common services should be considered as to preserve laboratory space for experiments.

b. Electrical
   i. This lab will need both facility power and connections to the Research Electrical Distribution Bus (REDB). This includes 4 AC bus ways running through the HSL and 4 DC bus ducts. Drop or connection points to the REDB shall be available for each sub-bay as close as possible to each sub-bay.
   ii. The ESL requires several utility AC power connections at 480 Vac, 208 Vac, 240 Vac and 120 Vac. The ratings and voltage levels are dictated by the laboratory equipment (ABC-150, AV-900, etc) Facility power will need to be of adequate size to power the planned research equipment.

c. Mechanical
   i. Special ventilation may be required by code in the ESL. If hydrogen is detected in the lab.
   ii. This lab will have large thermal loads from equipment that will be met with a laboratory-wide or facility-wide liquid cooling system that dumps heat to the outside.

d. Fuels

7. Finishes and Materials

a. Epoxy floor is to be provided for the ESL. The floor shall have an acid resistant finish to facilitate cleanup of accidental spills (i.e. battery acid).
b. The ESL needs a concrete slab sub-floor to withstand heavy equipment and semi-truck deliveries. This may require additional reinforcing/thickness or a structural slab.
c. The walls shall be finished in a way to provide a surface for mounting research equipment, facilities connections to power and cooling, and gas ventilation. The walls shall be of sufficient strength to mount lab devices.
d. A ceiling open to structure is acceptable.
e. Minimum of one overhead door: 16-18′ wide x 16′ high

8. Hazards and Special Needs

a. There is the potential for release of hydrogen in the ESL. Combustible gas sensors or ventilation features are required. Personnel and equipment safety interlocks and emergency-stop access are required. Oxygen monitoring will be required to detect $^{0}2$ deficient atmosphere because of a spill of cryogenic liquids or quench of SMESU.
b. Corrosive liquids and solids are present in lead acid batteries.
c. High voltage and high current AC and DC electricity are present in the lab. DC and AC voltages above 600 Vac/Vdc are possible. Large current discharges are possible from energy storage equipment.
d. Quenching and magnetic fields.
e. Electrical equipment areas of this lab shall be sprinklered on pre-action system.

9. Equipment List:

Quant.	Item Name	Make & Model	Size & Weight (w x d x h)	Mechanical	Electrical	Ventilation / Utilities	Research Bus Cnxn (AC/DC/none)	NREL or D-B Procure	NREL or D-B Install	Research Equip. Allowance	Notes
CERBS - Energy Storage Laboratory											
2	+-125KW DC station	Aerovironment ABC-150	40"x25"x50" 1,400 lbs		240 3ph, 360A		DC	D-B	D-B	Y	Requires power isolation xfrmr, modify for casters
1	+-250KW DC station	Aerovironment AV-900	34"x72"x77" 3,500 lbs		480 3ph, 335A		DC	D-B	D-B	Y	Requires power isolation xfrmr, modify for casters
1	5T portable chiller	Advantage M1-5A	34"x40"x60" 700lbs		460V 3ph, 20A			D-B	NREL	Y	
4	64cf Environ Chamber	Tenney	48"x48"x48"		480V 3ph	Liquid Cooling	AC & DC	D-B	D-B	Y	-40 to 80C
4	110 cf Envrion Chamber	Tenney	60"x60"x84"		480V 3ph	Liquid Cooling	AC & DC	D-B	D-B	Y	-40 to 80C
1	Battery Pack - Lead Acid (100 kWh)	TBD					DC	D-B	D_B	Y	
1	Battery Pack - Li+ (100 kWh)	TBD					DC	D-B	D-B	Y	
1	Battery Pack - NiMH+ (100 kWh)	TBD					DC	D-B	D-B	Y	
1	Vanadium-Redox Flow Battery	VRB-ESS	large				DC	D-B	D-B	Y	
1	Ice Storage / Air Conditioner (60,000 BTU - 5 Ton)	Ice Bear 30 Hybrid Air Conditioner #IB30A-543	4' x 5' x 8'		280V(15 kVA)		AC	D-B	D-B	Y	
2	Ultracapacitors	Maxwell BMOD0063 P125 B24 http://www.maxwell.com/					DC	D-B	D-B	Y	
2	Ultracapacitors	Maxwell BMOD0083 P125 B24 http://www.maxwell.com/					DC	D-B	D-B	Y	
1	Corrosive Storage							D-B	D-B		cabinet, 22gal, self closing doors
1	Flammable Storage		4'w x 2' h					D-B	D-B		
8	Lab Stools							D-B	D-B		

M. Electrical Visualization Laboratory

1. Mission and Activities

The Electrical Visualization Lab provides a space to simulate utility controls and provide visualization for large power system simulations. This room will provide graphically oriented presentations using state-of-the art visualization technologies.

2. General Information

a. The high bay control room will be at least 1500 sq ft. (It can be enlarged if necessary)
b. This room does not need any daylighting and shall have the ability to go completely dark.
c. This room will be configured similar to a utility control room and provide for theater style seating for up to 16 people.
d. Rear wall of room may be open to hall through window to provide tour opportunity while training session is going on.

3. Examples and Pictures

The following are examples and pictures of control rooms and visualization tools.

Utility control room (www.barco.com)

Utility Visualization Lab - PNNL

Examples of Visual Display for Electrical Visualization

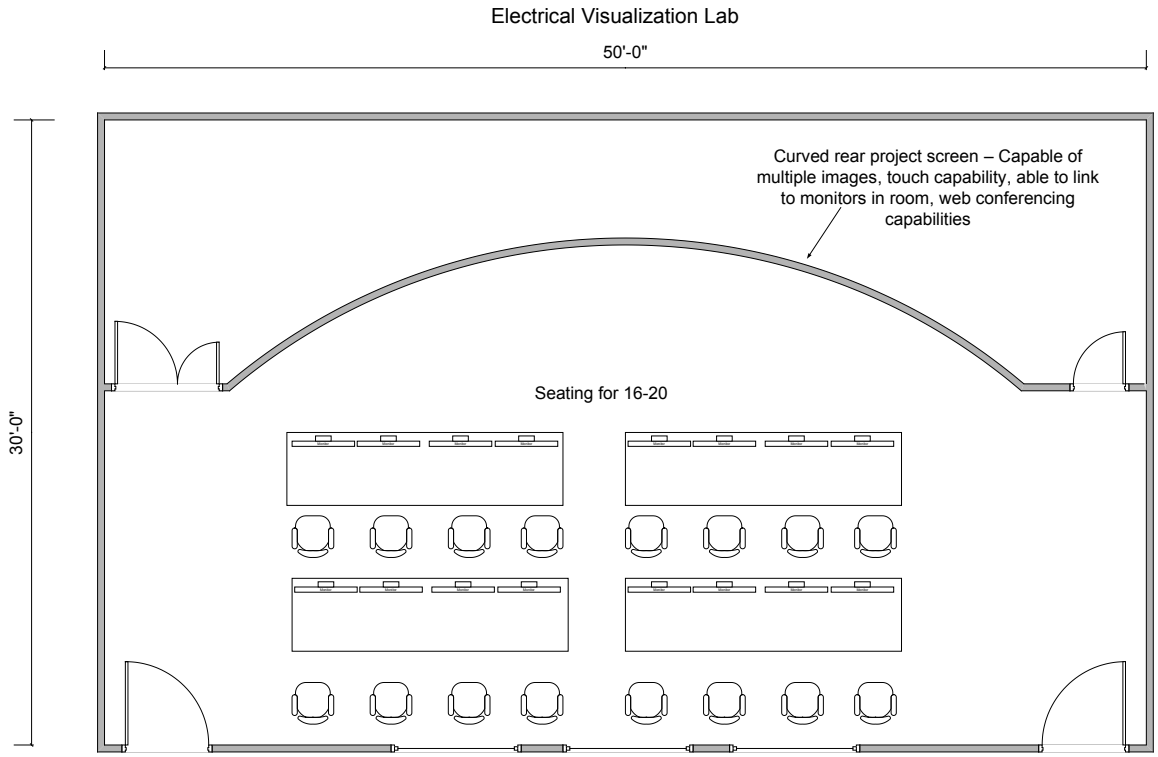

Example configuration for Electrical Visualization lab

Panasonic Life wall interactive display

4. **Adjacencies and Room Connections**

   a. The Electrical Visualization room does not need to be near the test laboratories
   b. The Electrical Visualization room does need connectivity to the High Bay control room, HPCDC, and ability to connect via the internet to external sites.
   c. Tours will be brought past and through the Electrical Visualization room.

5. **Laboratory Requirements**

   Electrical - Normal Office electrical in addition to power requirements for advanced displays.

6. **Finishes and Materials**

   a. Furnish with normal office type materials.
   b. Minimize noise from outside the room. Sound deadening panels will be used on the room walls and ceilings. High definition speakers and sound system shall be installed in this room.

7. **Hazards and Special Needs**

   No special hazards are in the Electrical Visualization room.

8. **Equipment List:**

Quant.	Item Name	Make & Model	Size & Weight (w x d x h)	Mechanical	Electrical	Ventilation / Utilities	Research Bus Cnxn (AC/DC/none)	NREL or D-B Procure	NREL or D-B Install	Research Equip. Allowance	Notes
CERBS - Electrical Visualization Laboratory											
1	Screen/Display	Panasonic Life Wall	35'x10'		110V?			D-B	D-B	Y	
1	Rear-projection display	James River Technical: Vis Wall or Cluster Wall	20' w x 8' h		110V?			D-B	D-B	Y	Location on the long wall of room typically requires 13' between screen and rear wall James River Technical: Vis Wall or Cluster Wall; Mechdyne software Resolution 4000 x 2000 pixels
1	Control/Workstation		6' x 12'	-	110V	-		D-B	D-B	Y	Workstation has computers/controls to run projectors, etc.
1	Audio Speakers				110V?			D-B	D-B	Y	
4	White Boards		8'w x 4'h					D-B	D-B		
*	Flexible Conference Tables			-	110V	-		D-B	D-B		*provide for 16 people (theater/control room layout) power for 16 laptops
20	Conference chairs			-	-	-		D-B	D-B		

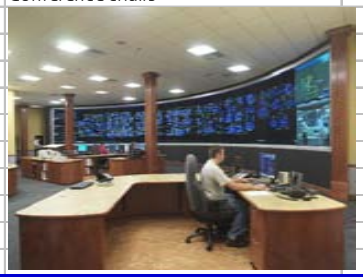
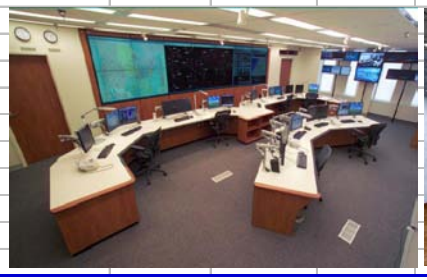
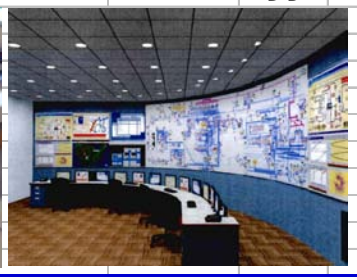

N. ZEB Simulation Lab

10. Mission and Activities

The purpose of the ZEB Simulation Lab is to test and demonstrate prototype building design tools and visualization methods. This lab supports the following programs: Building Technologies program and work for others activities.

Research activities include developing and testing early phase building design tools. The goal is to fully integrate energy optimization into the early phases of the design process and to provide this information back to designers very quickly. This lab will also demonstrate state of the art visualization tools to show building designs and the impacts on energy use and occupant comfort of design options.

11. General Information

a. This lab is a 240 SF simulation and visualization lab with two workstations.

12. Examples and Pictures

13. Adjacencies and Room Connections

a. This lab should be adjacent to the office area.

14. Laboratory Requirements

a. General
   i. Eight LAN connections
b. Electrical
   i. 120 VAC.
c. Mechanical
   i. This lab has normal temperature and humidity requirements.
d. Fuels
   N/A

15. Finishes and Materials

a. The interior finishes should match the office area.
b. Require black-out shading of windows to enhance visualization when desired.

16. Hazards and Special Needs

17. Equipment List:

Quant.	Item Name	Make & Model	Size & Weight (w x d x h)	Mechanical	Electrical	Ventilation / Utilities	Research Bus Cnxn (AC/DC/none)	NREL or D-B Procure	NREL or D-B Install	Research Equip. Allowance	Notes
CERBS - ZEB Sim Laboratory											
1	Smart Table	SMART Technologies ULC	35 7/8"x28 7/8"x25 1/2" 150 lbs.	-	110V	-		D-B	D-B	Y	multitouch, multiuser interactive learning center for hands-on, collaborative activities
1	Conference Table			-		-		D-B	D-B		Allow for 4 - 6 people
6	Conference chairs			-	-	-		D-B	D-B		

O. Thermal Storage Materials Lab :

1. Mission and Activities

The Thermal Storage Materials Lab is utilized to develop and characterize heat transfer fluids and thermal energy storage materials for use in Concentrating Solar Power (CSP) applications. CSP is unique in its ability to utilize thermal energy storage (TES) as a means to provide renewable electricity that can be dispatched as needed. TES can provide round-trip storage efficiencies well above 90% at costs much lower than batteries or other electricity storage options. The mission of this lab is to identify and characterize the best materials for TES with respect to thermochemical properties, physical properties, and material compatibility. Promising materials will be further evaluated for performance and cycle life in the associated Thermal Storage Process & Components Lab.

2. General Information

a. 1,000 SF wet chemistry laboratory
b. Two ventilated fume hoods rated for nanomaterial handling.
c. 10'x10' ventilated enclosure for bench-scale materials testing
d. Analytical equipment for high-temperature measurements of viscosity, heat capacity, heat of fusion, thermal stability, phase transition point, and other properties.

3. Examples and Pictures

Typical wet-chemistry laboratory for materials analysis

4. Adjacencies and Room Connections

a. This laboratory is located adjacent to the Thermal Storage Process & Components Laboratory. The latter lab is utilized to test candidate thermal storage materials and equipment in pilot-scale simulations of the storage cycle.

5. Laboratory Requirements

a. General
   i. Overhead ceiling, mezzanine or interstitial space options for running common services should be considered as to preserve laboratory space for experiments.
   ii. Lab includes extensive benchtop space in a peninsula layout

b. Electrical
   i. Most equipment uses 110VAC power. At least three duplex receptacles are required per 5-feet of benchtop.
   ii. Tombstones for utilities provided on peninsulas

iii. Four 210VAC single power receptacles required for furnaces and other equipment

c. Mechanical
   i. Provide adequate ventilation to exhaust two fume hoods and the 10'x10' enclosure.
   ii. Compressed air, nitrogen and vacuum are available along the benchtops. Hot and cold water are provided at three sinks. De-ionized water is provided at one location.
   iii. One deep utility sink and two standard sinks to be provided. All are stainless steel.

d. Fuels
   i. Fuels are not anticipated in this laboratory.

6. Finishes and Materials

a. The floor shall have a finish that is resistant to corrosive chemicals and heat to facilitate cleanup of accidental spills. Berm at perimeter
b. The walls will be finished in a way to provide a surface for mounting research equipment. The walls are of sufficient strength to mount display screens and cabinets.
c. Black epoxy countertops are appropriate for all benchtops.
d. Ceiling: open to structure is acceptable
e. One double 3-ft door required for equipment access

7. Hazards and Special Needs

a. Small quantities of hazardous chemicals
b. Small quantities of nanomaterials
c. High temperature liquids, furnaces, and test equipment (>500C).
d. Local exhaust ventilation for analyzers is provided

8. Casework:

a. Twelve (12) lineal feet of 8' tall storage cabinets
b. One hundred twenty five (125) lineal feet of bench table top
c. One hundred (100) lineal feet of out bench storage
d. Twenty (20) lineal feet of wall cabinets (above bench)
e. Three (3) sinks. One deep utility style and two standard size
f. One (1) corrosive storage cabinet (3' x 4')
g. One computer workstation.

9. Equipment List:

Quant.	Item Name	Make & Model	Size & Weight (w x d x h)	Mechanical	Electrical	Ventilation / Utilities	Research Bus Cnxn (AC/DC/none)	NREL or D-B Procure	NREL or D-B Install	Research Equip. Allowance	Notes
CERBS - Thermal Storage Materials Laboratory											
1	Differential Scanning Calorimeter (DSC)	Mettler-Toledo DSC1	36"x30" footprint	Nitrogen, low vibration	110vac	Local snorkel		D-B	D-B	Y	
1	Thermal Gravimetric Analyzer (TGA)	Mettler-Toledo TGA-DSC1	36"x30" footprint < 100 lbs	Nitrogen, low vibration	110vac	Local snorkel		D-B	D-B	Y	
1	Laser Flash Thermal Conductivity	TBD	36"x30" footprint < 100 lbs	nitrogen	110vac			D-B	D-B	Y	
1	Furnace	TBD	36"x30" footprint < 100 lbs		210vac			D-B	D-B	Y	
1	Rheometer	TA Instruments ar2000ex	36"x30" footprint < 100 lbs	house air	110vac			D-B	D-B	Y	
1	Thermal test loop	Bench-scale pilot system	10 ft x 10 ft (estimated)		110vac, 210vac	Ventilated enclosure, heat removal		D-B	D-B	Y	
1	Analyzer	TBD	48" x 30" (estimated)	Nitrogen	110vac	Local snorkel		D-B	D-B	Y	
1	Ventilated Enclosure		10'x10'x7'		110V	HEPA		D-B	D-B	Y	
2	Fume Hoods		5'	water, nitrogen	110V			D-B	D-B		provide corrosive & flammable storage cabinets below; rated for nanomaterials
1	Chemical Storage Refrigerator							D-B	D-B	Y	
1	Balance Table							D-B	D-B	Y	
1	Computer Workstation							NREL	NREL		
1	Densitometer		2x3' on benchtop					Existing	NREL		
1	Thermal bath		2x3' on benchtop					Existing	NREL		
1	Corrosive Storage							D-B	D-B		cabinet, 22gal, self closing doors
4	Lab Stools							D-B	D-B		

P. Thermal Storage Process and Components Lab

1. Mission and Activities

The Thermal Storage Process & Components Lab is utilized to test the performance, compatibility, and cycle life of heat transfer fluids, thermal energy storage processes, and equipment components and subsystems used for thermal energy storage (TES) systems. This work seeks to develop more efficient and cost-effective TES technologies for Concentrating Solar Power (CSP) applications. CSP is unique in its ability to utilize TES as a means to provide renewable electricity that can be dispatched as needed. TES can provide round-trip storage efficiencies well above 90% at costs much lower than batteries or other electricity storage options. The adjacent Thermal Storage Materials Lab evaluates the thermo chemical and physical properties of candidate materials. Those exhibiting promising characteristics are further tested in the Thermal Storage Process & Components Lab.

2. General Information

a. 1,500 SF wet chemistry laboratory
b. One ventilated fume hood rated for nano-material handling.
c. Open-floor layout for pilot-scale testing of thermal energy storage systems.
d. Ability to charge and discharge thermal energy at 100 kW via electric heaters and chilled water

3. Examples and Pictures

The Thermal Storage Process & Components Lab will support pilot-scale testing of TES systems.

4. Adjacencies and Room Connections

a. This laboratory is located adjacent to the Thermal Storage Materials Laboratory, which is utilized to determine the thermo-chemical and physical properties of candidate heat transfer and thermal storage materials.

5. Laboratory Requirements

a. General
   i. Overhead ceiling, mezzanine or interstitial space options for running common services should be considered as to preserve laboratory space for experiments.
   ii. Lab includes an open floor plan to facilitate testing of skid-mounted systems
   iii. Limited wall-running bench top space and one fume hood are provided
   iv. Compressed gas cylinder rack for at least eight cylinders on wall

b. Electrical
   i. Wall-mounted power strips with 110VAC receptacles on 24" centers
   ii. Overhead utility raceway running the length of the room includes 110VAC quad drop-boxes every six feet. Center over open floor area.
   iii. At least three duplex receptacles are required per 5-feet of bench top.
   iv. Multiple 480 VAC single-phase power circuits supporting up to 100 kW are required for electric heaters and other equipment.

c. Mechanical
   i. Adequate ventilation to exhaust single fume hood and local snorkels
   ii. Local ventilation provided by flexible snorkels at six locations
   iii. Compressed air, nitrogen and vacuum are available along the bench tops. Hot and cold water are provided at sink. Access to chilled house cooling water at two locations
   iv. One deep utility sink provided. (stainless steel)

d. Fuels
   i. Fuels are not anticipated in this laboratory.

6. Finishes and Materials

a. The floor has a finish that is resistant to corrosive chemicals and heat to facilitate cleanup of accidental spills, berm at perimeter
b. The walls are finished in a way to provide a surface for mounting research equipment. The walls are of sufficient strength to mount display screens and cabinets.
c. Black epoxy countertops are appropriate for all bench tops.
d. Ceiling: open to structure (no drop ceiling)
e. One double 3-ft door required for equipment access

7. Hazards and Special Needs

a. Small quantities of hazardous chemicals
b. Small quantities of nano-materials
c. High temperature liquids and test equipment (>500C)
d. High electrical and thermal loads (100kW)
e. Local exhaust ventilation is required

8. Casework:

a. Twelve (12) lineal feet of 8' tall storage cabinets
b. Twenty (20) lineal feet of bench table top
c. Overhead cable tray

d. Twenty (20) lineal feet of under bench storage
e. Twenty (20) lineal feet of wall cabinets (above bench)
f. One (1) sink, deep utility style
g. Two (2) corrosive storage cabinets, 3′ x 4′

9. **Equipment List:**

Quant.	Item Name	Make & Model	Size & Weight (w x d x h)	Mechanical	Electrical	Ventilation / Utilities	Research Bus Cnxn (AC/DC/none)	NREL or D-B Procure	NREL or D-B Install	Research Equip. Allowance	Notes
CERBS - Thermal Storage Process & Components Laboratory											
1	Data acquisition systems							NREL	NREL		desktop computer
1	Process control system							NREL	NREL		desktop computer
1	Electric heaters (100kW total)				480v, 200 amps			D-B	D-B	Y	100 kW electric
1	Process test loop							D-B	D-B	Y	chilled water for cooling at up to 75 kW
1	Fume Hood		5'	water, nitrogen	110V			D-B	D-B		provide corrosive & flammable storage cabinets below
4	Lab Stools							D-B	D-B		

Q. Outdoor Test Area

1. Mission and Activities

The purpose of the Outdoor Test Area is to provide a flexible environment for testing and evaluation of renewable energy, hydrogen, and building technologies. The Outdoor Test Area will also provide a means to connect outdoor test equipment to other ESIF experiments and the grid. This area supports the following programs: Office of Electricity (OE), Solar Energy Technology Program (SETP), Buildings program, Wind Program, Hydrogen Program, and other work for others activities.

Research activities include testing interactions and compatibility of different distributed and renewable energy systems with the electric grid and each other. The laboratory shall be used to conduct research to explore a variety of operating configurations including: grid connected stand-alone, micro-grids, and hybrid power systems.

The Outdoor Test Area shall be located near the ESIF. This area will provide a visual show case of a variety of technologies that are tested in the ESIF. It must also have a way to secure the test area from the rest of the surrounding area. Tours will be taken through the Outdoor Test Area.

2. General Information

a. 4,000 sq ft of test area shall be provided for building technology experiments. 50% of this area shall have unobstructed southern view for solar access. The 480V Distribution Test Area shall have four (20′ x 20′) open test pads.
b. 3,000 sq ft of test area shall be provided for hydrogen experiments. This would include: concrete pads for hydrogen storage tanks (30′x30′), hydrogen filling stations (10′x10′) located with driving access for vehicles and buses, and a (80′x20′) for Hydrogen Systems and generation devices. 3,000 sqft shall be made available for distributed energy experiments. This would include six (10′ x 10′) test areas and two (20' x 40′) test areas
c. Video connections with live feeds to the High Bay Control from the Outdoor test area
d. Pads shall be accessible by forklifts to position equipment. Yard containment engineering, grading and concrete gutter shall be provided.

3. Examples and Pictures

Below are pictures of Outdoor Test Equipment at NREL. These are meant to be representative examples of similar rooms or equipment.

Outdoor Hydrogen Storage

1MVA electrical transformer (green) (GFE), 480V switchgear (GFE), Experiment Container

60kW Hydrogen Generator

80kW and 125kW Diesel Generators (GFE)

Battery container (GFE)

Two 30kW Capstone Microturbines (Natural gas powered) (GFE)

165kW Load Bank (GFE)

Water connections on test pad

Electrolyzer experiment container

Flywheel Container

Sodium Sulfur Battery

4. **Adjacencies and Room Connections**

   a. The Outdoor test area will be located near the High Bay Labs in the ESIF. It has critical adjacencies to the High Bay Test Area, the Hydrogen Systems Lab, and the Energy Storage Lab.

5. **Laboratory Requirements**

   a. **General**
      i. The Outdoor Test Area (OTA)OTA shall allow level ground fork lift access. Engineer slab to accommodate appropriated structural loads.
      ii. The hydrogen area of the OTA shall be designed to meet NEC Articles 500 and 501 hazardous classification (Class I, Div.2) and relevant NFPA standards.

   b. **Electrical**
      i. This area will need facility power, connections to the Research Electrical Distribution Bus (REDB), and a 13.2 kV utility feed. The REDB is described in section 5.3.10.2A.
      ii. Facility power will need to be of adequate size to power the planned research equipment and will include both 120V and 480V service.

iii. The OTA will have connections communications capabilities to outdoor experiments from both the High Bay control room and Hydrogen Systems Lab. This will accommodate remote data collection, process control, and safety interlocks.

iv. The Microgrid test area is an underground test distribution system in this area will have the following properties:
- The system will closely resemble a typical underground 13.2 kV utility distribution system. Breakers, Reclosers, Transformers, Cables, etc., shall be standard utility grade 15 kV class equipment.
- The system will be reconfigurable through sectionalizing devices to allow testing of common types of distribution circuit configurations such as radial, looped, and networked.
- The system will be Y-connected primary. The cable neutral shall be sized to carry full phase current.
- The system will be designed to interconnect with the REDB. Interconnection transformers shall be rated at 1 MVA.
- Fuses and breakers will be coordinated, as practical, to offer full protection to all cables and equipment.
- The system will have a 13.2 kV tie to the Xcel system. The system will coordinate with any tie to the Xcel-fed campus primary distribution system.
- Interconnections with Xcel and the REDB shall be bidirectional.
- The system will include fiber optic communications to allow real-time monitoring and control. The system shall be tied into the ESIF SCADA system. There shall be fiber/twisted pair communication between pads.
- The Line Impedance Simulators will have an adjustable resistance and inductance to simulate a variety of line lengths.

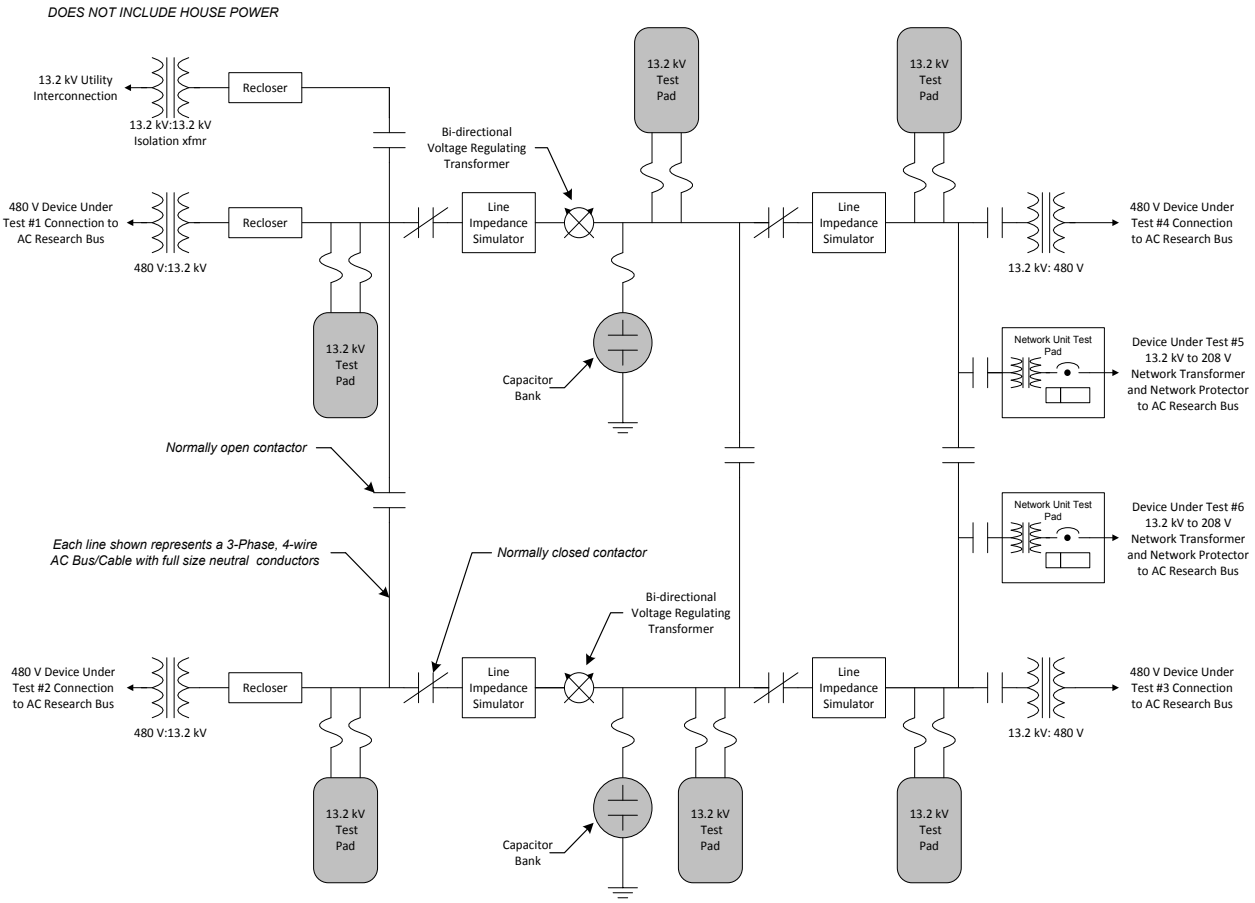

Microgrid Test Distribution System

c. **Mechanical**
   i. This lab will have large thermal loads from equipment.
   ii. The building technologies test area will require connections to the research chilled and heating water loops. The connection can be made at the ESIF commercial buildings high bay test lab.

d. **Fuels**
   i. Provision shall be made to connect to hydrogen fuel storage located in this area
   ii. Connections to the research fuel bus shall be made
   iii. Provide accessibility to natural gas
   iv. A 500 gallon diesel fuel system shall be located in this area.

6. **Finishes and Materials**

   a. Fuel storage shall meet applicable codes for setbacks.

7. **Hazards and Special Needs**

   a. Medium voltage and high current electricity.
   b. Noise and Vibrations from test articles. Hydrogen compressors create strong vibration that must be mitigated.
   c. Flammable fuel storage
   d. High pressure hydrogen will be in the hydrogen section of the OTA
   e. Test articles will require spill containment.
   f. This test distribution system yard shall be graded to comply with environmental requirements to capture contamination due to oil spills, etc.
   g. The hydrogen area that contains hydrogen storage systems (tanks), hydrogen vehicle fuel dispensing systems, compressors, and large electrolyzers or fuel cells must have safe, easy vehicle access. This could possibly become a high-traffic situation with many external vehicles frequenting the filing stations. It shall be located away from NREL thoroughfare, but close to the HSL. Consideration should be made for making the hydrogen dispensing system highly visible for visitors and users.
   h. The concrete pads shall be built to take high compression and be made from low resistance concrete. The drive-up area near the dispensers must be very low resistance concrete. The test areas need to be electrically grounded.
   i. Trenches in the OTA need to be accessible to check for gas leaks and new connections, and wiring.
   j. A canopy is recommended to connect the ESIF (at the HSL) to the hydrogen filling stations. The canopy could serve to shelter vehicles filling up at the hydrogen dispensers, as will as integrate with the major cable raceway connecting the HSL.

8. **Equipment Lists:**

   NOTE: The NaS Battery (5MWh) on page 2 of the Outdoor Test Area - 480C Distribution Test Area) is equipment list should indicate a "Y" in the column for Research Equipment Allowance indicating that it is part of the allowance.

Quant.	Item Name	Make & Model	Size & Weight (w x d x h)	Mechanical	Electrical	Ventilation / Utilities	Research Bus Cnxn (AC/DC/none)	NREL or D-B Procure	NREL or D-B Install	Research Equip. Allowance	Notes
CERBS - Outdoor Test Area - H2 Production, Compression, Storage Dispensing and Fuel Cells											
1	Hydrogen high pressure compressor 240 bar (3500 psi)	Pressure Products or PDC (100 psi inlet to 3500 psi outlet, 50 Nm3/hr)	6'x2'x4' 500 lbs.		480V(10 kVA)	Liquid Cooling, H2 Fuel Line from Electrolyzers, H2 Fuel Line to 3500# Storage Tank		D-B	D-B	Y	
1	Hydrogen high pressure compressor 350 bar (5000 psi)	Pressure Products or PDC (2500 psi inlet to 5000 psi outlet, 20 Nm3/hr)	6'x2'x4' 500 lbs.		480V(10 kVA)	Liquid Cooling, H2 Fuel Line from 3500# Storage Tank, H2 Fuel Line to 5000# Storage Tank		D-B	D-B	Y	
1	Hydrogen high pressure compressor 700 bar (10000 psi)	Pressure Products or PDC (2500 psi inlet to 10000 psi outlet, 10 Nm3/hr)	6'x2'x4' 500 lbs.		480V(10 kVA)	Liquid Cooling, H2 Fuel Line from 2500# Storage Tank, H2 Fuel Line to 10000# Storage Tank		D-B	D-B	Y	
1	Hydrogen high pressure compressor 1000 bar (15000 psi)	Pressure Products or PDC (9000 psi inlet to 15000 psi outlet, 10 Nm3/hr)	6'x2'x4' 500 lbs.		480V(10 kVA)	Liquid Cooling, H2 Fuel Line from 10000# Storage Tank, H2 Fuel Line to 15000# Storage Tank		D-B	D-B	Y	

Quant.	Item Name	Make & Model	Size & Weight (w x d x h)	Mechanical	Electrical	Ventilation / Utilities	Research Bus Cnxn (AC/DC/none)	NREL or D-B Procure	NREL or D-B Install	Research Equip. Allowance	Notes
CERBS - Outdoor Test Area - H2 Production, Compression, Storage Dispensing and Fuel Cells (pg. 2)											
1	High pressure hydrogen dispenser (350 bar) for vehicle fueling	Kraus Global-SHM-1HRN	3'x2'x8' 300 lbs.		120V-10A	H2 Research Fuel Line (5000 psi)		existing	D-B		
1	High pressure hydrogen dispenser (700 bar) for vehicle fueling	Kraus Global-	3'x2'x8' 300 lbs.		120V-10A	H2 Research Fuel Line (10000 psi)		D-B	D-B	Y	
1	H2 Internal Combustion Engine Generator Set	HEC - HEC649I-RLB	10'x3'x4' 1,000 lbs.		480V(60 kVA)	H2 Research Fuel Line (5000 psi)	AC	existing	D-B		
1	H2 Storage Tanks 240 bar (3500 psi)	CPI, FIBA	10'x6'x20' 40,000 lbs.			Compressed air (100 psi)		existing	D-B		
1	H2 Storage Tanks 350 bar (5000#)	CEBA	3'x3'x30' 15,000 lbs.			Compressed air (100 psi)		existing	D-B		
1	H2 Storage Tanks 750 bar (10000 psi)	FIBA				Compressed air (100 psi)		D-B	D-B	Y	
1	H2 Storage Tanks 1000 bar (15000 psi)	FIBA				Compressed air (100 psi)		D-B	D-B	Y	
1	250 kW phosphoric acid fuel cell	TBD				Compressed air (100 psi)	AC	D-B	D-B	Y	

Quant.	Item Name	Make & Model	Size & Weight (w x d x h)	Mechanical	Electrical	Ventilation / Utilities	Research Bus Cnxn (AC/DC/none)	NREL or D-B Procure	NREL or D-B Install	Research Equip. Allowance	Notes
CERBS - Outdoor Test Area - 480V Distribution Test Area											
1	Fiber/twisted pair communication equipment between pads and back to Highbay Control Room	TBD - as part of research bus scada system									
1	100KW PV array	per D-B					DC	D-B	D-B	Y	
1	100KW DC Load Bank	Simplex custom	Similar to 100KW AC		cntl 120V,fan 208VAC	"	DC	D-B	D-B	Y	
1	AC Load Bank (800KW,R+ LC TBD)	Custom Simplex Mars	48"x72"x114" 3000lbs		cntl 120V,fan 240 3ph	Open to atmos for exhaust	AC	D-B	D-B	Y	
1	AC Load Bank (100KW,RL)	Simplex Neptune	38"x70"x114" 1900lbs		cntl 120V,fan 240 3ph	"	AC	existing	D-B		
1	AC Load Bank (200KW,RLC)	Simplex Titan	96"x60"x132" heavier		cntl 120V,fan 208VAC	"	AC	existing	D-B		
2	30k+B146W NG Microturbine (2 units)	Capstone 330 (stnd encl & indust encl)	28"x48"x72" 30"x60"x72" 1450lbs/ea	NatGas,15psig, Max 660scfh		"	AC	existing	D-B		
1	80KW Diesel Genset	Onan	40"x105"x72" ~3000lbs		120V	"	AC	existing	D-B		

Quant.	Item Name	Make & Model	Size & Weight (w x d x h)	Mechanical	Electrical	Ventilation / Utilities	Research Bus Cnxn (AC/DC/none)	NREL or D-B Procure	NREL or D-B Install	Research Equip. Allowance	Notes
CERBS - Outdoor Test Area - 480V Distribution Test Area (pg. 2)											
1	125KW Diesel Genset	Onan	40"x105"x 84" ~3500lbs		120V	"	AC	existing	D-B		
1	Genset connection switchgear	Northern Power Custom Prod	60"x13"x86" ~1000lbs		120V	"	AC	existing	D-B		
1	125kW NG Genset	Onan GGHH	40"x105"x 84" ~2500lbs		120V	"	AC	D-B	D-B	Y	
2	Flywheel generators	Beacon	25 kWh					D-B	D-B	Y	
1	Ice Storage (50 - 100 Ton)	TBD						D-B	D-B	Y	
1	Battery - NaS (5 MWh)	NGK					DC	D-B	D-B		
1	Flywheel	Piller Power System Powerbridge Flywheel 19 MWs					AC & DC	D-B	D-B	Y	

Quant.	Item Name	Make & Model	Size & Weight (w x d x h)	Mechanical	Electrical	Ventilation / Utilities	Research Bus Cnxn (AC/DC/none)	NREL or D-B Procure	NREL or D-B Install	Research Equip. Allowance	Notes
CERBS - Outdoor Test Area - Micro Grid 13.2 kV Distribution Test Area											
4	13.2 kV to 480 V Y-Y transformer 1000 kVA	Specific M&M TBD	5'x5'x5'		13.2 kV to 480 V	NA	AC	D-B	D-B	Y	(two AC bus ties, bus 1 and bus 2)
5	Reclosers (as station breakers)	Similar to Cooper PWE Specific M&M TBD			13.2 kV	NA	None	D-B	D-B	Y	SCADA controllable via fiber connection. Padmount Triple / Single preffered if possible.
2	Bi-directional voltage regulators (three single phase units)	Similar to Cooper Padmounted VR Specific M&M TBD			15 kV class	NA	None	D-B	D-B	Y	SCADA controllable via fiber connection
2	Capacitor banks- configurable	Similar to ABB Padmounted Cap banks Specific M&M TBD			15 kV class	NA	None	D-B	D-B	Y	SCADA controllable via fiber connection - Multi-step control prefered -single-phase controllable 1200 kVAR
2	Load banks - 1000 kVA	Simplex Titan	96"x60"x132"		600 V or 13.2 kV	cntl 120 V, fan 480 3ph	None	D-B	D-B	Y	These should have reactive and resistive loads. 600V will require transformer.
4	Line impedance simulators	TBD			13.2 kV	NA	None	D-B	D-B	Y	These may need to be specially ordered - programmable to emmulate line types and distances
8	200 Amp switch cabinets (3 or 4 ways)	Similar to S&C PME Remote Supervisory Padmounted Specific M&M TBD			15 kV class	NA	None	D-B	D-B	Y	Will tie test bays and intertie feeders

Quant.	Item Name	Make & Model	Size & Weight (w x d x h)	Mechanical	Electrical	Ventilation / Utilities	Research Bus Cnxn (AC/DC/none)	NREL or D-B Procure	NREL or D-B Install	Research Equip. Allowance	Notes
CERBS - Outdoor Test Area - Micro Grid 13.2 kV Distribution Test Area (pg. 2)											
6000 ft	25 kV EPR URD 200 Amp cable Kerite	Kerite/Okonite			25 kV class	NA	None	D-B	D-B	Y	This will allow 2000 feet of 3-phase runs
50	Load break elbows				25 kV class	NA		D-B	D-B	Y	for terminating at each 15 kV device
10	3-phase transformers for use on test bays	Specific M&M TBD	3-phase, 300 kVA, 500 kVA, 750 kVA		5x 13.2/208 5x 13.2/480	NA	None	D-B	D-B	Y	For connecting test bay equipment. Pad mount type
2	Network transformers - 1000 kVA	Specific M&M TBD	500 kVA		13.2/208	NA	None	D-B	D-B	Y	
2	200 A network protectors	Similar to Eaton CM52 Specific M&M TBD	200 Amp		208 V	NA	None	D-B	D-B	Y	
0	Lab Stools							D-B	D-B		

5.3.2.4 METROLOGY LAB

A. Electric Calibration Lab:

1. **Mission:**

   This lab does electrical LF, temperature, frequency, pressure, humidity and scale calibration using NIST and other national standards.

   The lab is customer oriented as they serve other laboratories: Calibrate equipment to .1 parts/million accuracy.

2. **Existing Facility:**

   A walkthrough was conducted of the current lab located on top of the mesa at South Table Mountain. Refer to photographs.

3. **General:**

   a. 1,000 SF (750 SF lab with a 250 shield room) with sink area to isolate from outside environmental conditions.
   b. 300 SF staging area with access to two parking spaces in item "d" below.
   c. Noise, vibration sensitive: cannot be near labs that vibrate or make vibrations.
   d. Two (2) parking spaces: one (1) for metrology lab vehicle; other space for customers.
   e. Construction shall meet requirements called ou in NCSLI-RP-7 "Laboratory Design – Recommended Practice", e.g. independent grounding grid for entire room < 5 ohms, Radio Frequency Interference suppression internal field strength < 50 microvolt/meter, Electro-Magnetic Interference suppression Internal Field Strength < 50 microvolt.meter.
   f. Utility electrical power supply stability sensitive: must be electrically isolated from other labs
   g. Laboratory must be certified by an ISO-17025 accredited organization.
   h. 5' x 3' 600 cfm exhaust hood located in calibration lab not in shield room.

4. **Hazards Include:**

   Lab-scale chemical use.

5. **Equipment List**:

Quant.	Item Name	Make & Model	Size & Weight (w x d x h)	Mechanical	Electrical	Ventilation	NREL or D-B Procure	NREL or D-B Install	Research Equip. Allowance	Notes
Metrology Laboratory										
2	Lineconditioners w/ Purpose built Isolation Center Tab Transformer for 120V/60Hz	Phasetec PT180	31"x24"x13"		20KW/each Total for two lineconditioners = 40 KW	-10° to 40 °	D-B	D-B	Y	180 lb/each; linconditioners will be located outside the laboratory area
1	Exhaust Hood		5' x 3'	600 cfm			D-B	D-B		manual shutter, variable speed; located in primary lab not shield room
2	Two Shelf Audio Visual & Instrument Truck with wheels	Global Equipment Company Inc. WA502282	4'x2'x31"	-	-	-	D-B	D-B	Y	load capacity = 1,200 lb
1	Three Shelf Audio Visual & Instrument Truck with wheels	Global Equipment Company Inc. WA251407	4'x2'x34"	-	-	-	D-B	D-B	Y	load capacity = 1,200 lb
5	Lab Stools						D-B	D-B		

B. Shield Room: electrically isolated shielded room

1. Construction shall meet and certify requirements called out in NCSLI-RP-7 "Laboratory Design-Recommend Practice. The Meteorology Lab, electrical and Shield Rooms will be certified by an ISO-17025 Accredited organization, Grounding grid for rooms < 5 ohms, RFI suppression Internal Field Strength < 50 microvolt/Meter, EMI suppression Internal Field Strength < 50 microvolt/Meter, shield room certification/testing to >80 db attenuation, up to frequency =2.5 GHz
   a. Equipment is brought in on carts

2. **Rooms and Adjacencies:**
   a. Primary:
      i. Dock for equipment delivery
      ii. Secured Equipment staging area
      iii. Secured storage
      iv. Airlock entry (heat sink)
   b. Secondary:
      i. Optics Calibration Lab
      ii. Office area adjacent to the lab
      iii. Provide office for main administration assistant adjacent to the lab to receive customers (i.e. receptionist)

3. **Finishes:**
   a. Floors: static dissipating (light color)
   b. Other finishes: standard
   c. Ceiling: 9'-0" minimum: smooth, non-glare finish(ACT)

4. **Laboratory Requirements:**
   a. General:
      i. Refer to General Laboratory specifications sheets for specifics
      ii. No windows in the laboratories, except in the doors , (windows shall be 1' x 2' at 4.8' from the floor
      iii. Doors: 42" x standard height
      iv. Provide air lock into lab
      v. Electrical utility power is isolated form other laboratories.

   b. Casework:
      i. Wood bench tops
      ii. 9 lineal feet upper cabinets (glass doors)
      iii. Provide base cabinets under benches: provide knee spaces.
      iv. 64 lineal feet (able to support equipment up to 400 pounds) with 18" wide instrument shelf
      v. 5 full height wall cabinets
      vi. 5 stools total

   c. Utilities/Gases/Chemicals:
      i. Nitrogen gas cylinder (secured to end of bench)

   d. Mechanical/Electrical:
      i. 24 hours and seven days a week.
      ii. The temperature (any location within room): 23°C +/- 0.5°C
      iii. relative humidity (any location within room: 35% RH +/- 10%
      iv. Conditioned power: 115V (filter out spikes; use line conditioner to create own spikes for testing)

v. Antenna post at the highest point of the building roof with a conduit to GPS inside the Metrology Lab.

5. Staging Area:

a. Provide two (2) 3-level hanging wall to wall shelves with 2 feet depth, load=2000 per shelf
b. Provide one (1) 4x4 ft table to withstand load=2000 lb (new)
c. Provide one (1) double-door 5 ft total width with access to the outside parking lot with a ramp and stairs
d. Provide one (1) double-door 5 ft total width with access to a hall way that has access to the metrology laboratory area
e. Support the following NREL-provided equipment and furniture
   i. 1/phone
   ii. 1/Personal Computer
   iii. 1/computer station
   iv. 1/laser printer with network card
   v. 1/color laser printer with network card
   vi. 2/cabinets with drawers for printers
   vii. 3/network connections for PC and two printers
   viii. 6/filing cabinets/3x1.6x5.5 ft
   ix. 2/chairs

C. Optics Calibration Lab

1. **Mission: Optical calibrations using NIST and other national standards**
2. **Existing Facility: See walk through photographs.**
3. **General:**
   a. 600 SF
   b. Noise, vibration sensitive: cannot be near labs that vibrate or make vibrations.
4. **Rooms and Adjacencies:**
   a. Primary:
      i. Metrology Lab, electrical calibration room
   b. Secondary:
      i. Office area adjacent to the lab
5. **Finishes:**
   a. Walls/Floors: flat black
   b. Floors: static dissipating (dark color)
   c. Ceiling: 9'-0" minimum: smooth, non-glare, flat black finish(ACT)
6. **Laboratory Requirements:**
   a. General:
      i. Refer to General Laboratory specifications sheets for specifics
      ii. No windows in the laboratories.
      iii. 42" standard height door thru airlock, flat black interior
   b. Casework:
      i. All to be flat black
      ii. 12 – 18 lineal feet of tall storage cabinets
      iii. 24 – 30 lineal feet of bench top
      iv. 12 – 18 lineal feet of upper cabinets
      v. 12 – 18 lineal feet of base cabinets
   c. Mechanical/Electrical:
      i. 24 hours and seven days a week.
      ii. The temperature (any location within room): 23°C +/- 0.5°C
      iii. relative humidity (any location within room: 25% RH +/- 10%
      iv. Floor trench for power to optical bench
      v. Three way switching
      vi. 2' x 2' 300 cfm exhaust hood located in center of optics calibration room
   d. Note: Construction shall meet requirements called out in NCSLI-RP-7 "Laboratory Design-Recommended Practice with ISO-17025 Accreditation, All Lab area is painted flat black (using 3M 101-C10 or equivalent); Reflectance less than 6% for 250-2500 nm wavelength range grounding grid for entire room <5 ohms, RFI suppression Internal Field Strength – 50 microvolt/Meter, EMI suppression Internal Field Strength – 50 microvolt/Meter
7. **Equipment List:**

Quant.	Item Name	Make & Model	Size & Weight (w x d x h)	Mechanical	Electrical	Ventilation	NREL or D-B Procure	NREL or D-B Install	Research Equip. Allowance	Notes
Optics Calibration Laboratory										
1	Lineconditioners w/ Purpose built Isolation Center Tab Transformer for 120V/60Hz	Phasetec PT155	26"x19"x14"		13KW	-10° to 40 °	D-B	D-B	Y	145 lb; linconditioners will be located outside the laboratory area
1	Exhaust Hood		2'x2'				D-B	D-B		with 300 cfm exhaust, center of room flush with ceiling, manual shutter, variable speed.
3	Lab Stools						D-B	D-B		

5.3.2.5 HYDROGEN TECHNOLOGIES AND SYSTEMS CENTER (HT&SC):

A. Manufacturing Lab

1. Mission:

Evaluation and development of diagnostic systems for in-line quality control of fuel cell membrane electrode assembly (MEA) components.

2. General Requirements:

a. The Manufacturing lab must accommodate a web line for unrolling and testing and rerolling goods with a space about 12' wide and 30' long in the center of the room. Lab requires a "staging area" for receipt of equipment near dock.
b. The equipment itself is approximately 4' wide.
c. There will be some humidity control and temperature control monitoring around this function;, a range of 25 to 70% RH .
d. Casework will be provided at the perimeter with about 12 lineal feet of floor standing full height storage, bench top along one long wall with 2 knee spaces and 6 feet of wall cabinet above with glass doors. Provide an overhead cable tray.
e. The lab shall have easy access to shipping and receiving and 6 ft wide double doors.
f. There shall be a sink and DI water supply.
g. The web line creates some noise and vibration with electric motors
h. The lab does not require process cooling - only 5w of heat dumped. There may be a need for process cooling in the future.
i. 110v electrical outlets at regular spacing is necessary, 480v 3p and local UPS also.
j. A standard approach to lighting is adequate, day lighting is desirable.
k. Provide two (2) cabinets for general lab solvents and membrane or catalyst solutions.
l. Provide a chemical fume hood.

3. Hazards Include:

a. Material handling equipment
b. Mechanical
c. In-running nip points

4. Equipment List:

Quant.	Item Name	Make & Model	Size & Weight	Mechanical	Electrical	Ventilation	NREL or D-B Procure	NREL or D-B Install	Research Equip. Allowance	Notes
HT&SC - Manufacturing Lab										
1	Unwind Module	existing S&TF PDIL Bay 1*	6'x4'x4'	Compr Air	460 3 phase		Existing to be relocated	NREL		*RFP currently in process for this equipment, potential vendors are Parkinson, Davis-Standard, and Webex
1	Rewind Module	existing S&TF PDIL Bay 1	6'x4'x4'	Compr Air	460 3 phase		Existing to be relocated	NREL		see above
1	Instrumentation Module	existing S&TF PDIL Bay 1	6'x4'x4'				Existing to be relocated	NREL		see above
1	Process Module	*	6'x6'x5'	Compr Air	460 3 phase	yes	D-B	D-B	Y	*See above, this will likely be from the same vendor as the rest of the web-line modules. This would most likely be a membrane casting or coating station.
1	Optical diagnostic test platform	existing S&TF PDIL Bay 1; NREL designed and constructed	3'x5'		120		Existing to be relocated	NREL		
1	X diagnostic test platform	*	3'x5'		120		D-B	D-B	Y	*Ongoing research will determine what instrument this is. It could be, for example, an x-ray fluorescense unit, or a corona gun unit, or others
1	Y diagnostic test platform		3'x5'		120		D-B	D-B	Y	see above
1	Fume Hood		6'				D-B	D-B		provide flammable storage cabinets below
2	Flammable Storage		4'w x 2' h				D-B	D-B		
3	Lab Stools						D-B	D-B		

B. MEA Lab:

1. **Mission:**

   Fuel Cell MEA Fabrication & Characterization

2. **General Requirements:**

   a. Work involves fabrication of a single fuel cell in a fume hood.
   b. Provide 3 standard fumehoods and laminar flow hood and an environmental chamber. The environmental chamber is bench top style 4' by 3' footprint.
   c. MEA Lab will use some chemicals: acids, bases, salts, precious metals, polymers and solvents. Corrosives and flammables can be placed in vented storage under hoods.
   d. Casework can be standard configuration/materials;
      i. Provide 3' x 6' bench for cell hardware setup and one for cell hardware tear down. Provide 3' x 5' bench for membrane characterization.
      ii. Provide fixed cabinets under benches along walls, 20 6' or 8'l x 30"h
      iii. Fixed leg tables for knee spaces.
      iv. Provide wall cabinets with shelves, 12 lineal feet
      v. No full height storage needed
      vi. Provide 2 corrosive storage cabinets for acids and bases
      vii. Provide 2 flammable storage cabinets for solvents
      viii. Provide 4 gas cabinets
      ix. Provide overhead cable tray
   e. Provide accurate temperature and humidity control and measurement of laboratory environmental conditions. .
   f. The lab will be serviced with vacuum.

3. **Rooms and Adjacencies:**

   a. This new lab is to be adjacent to the Fuel Cell Lab, and the Hydrogen Sensor Lab. Adjacency to the Fuel Cell Lab is critical.

4. **Finishes:**

   a. Flooring shall be resistant and bermed

5. **Equipment List:**

Quant.	Item Name	Make & Model	Size & Weight	Mechanical	Electrical	Ventilation	NREL or D-B Procure	NREL or D-B Install	Research Equip. Allowance	Notes
HT&SC - MEA Lab										
1	Hot press	existing	2'x2'x3'		220		Existing to be relocated (moved from SERF W-129)	NREL		
1	Vacuum table	existing Cole-Palmer or Gel Dryer (e.g., Model SP GD4534A)	45 cm x 34 cm	vacuum	110		D-B	D-B	Y	
1	3x Vacuum oven		2'x2'x2'		120		D-B	D-B	Y	
1	Membrane casting (draw down table)	Accu-lab	2'x2'			local	D-B	D-B	Y	
1	EGA(TGA/MS/IR) and DMA, DSC workstation EGA (Evolved gas analysis) consisting of Thermogravimetric analysis (TGA)/Mass Spectroscopy (MS)/Infrared Spectroscopy (IR), Dynamic Mechanical Analysis (DMA), and Dynamic Scanning Calorimmetry (DSC)	TA Instruments: examples for specific models TGA:Q500, TGA/DSC (Q600), DSC(Q2000), DMA (Q800), EGA*	3'x5' for each piece		120	local	D-B	D-B	Y	*EGA (not currently off shelf) can be found at http://www.tainstruments.com/product.aspx?id=9&n=1&siteid=11
1	Vapor sorption workstation Dynamic Vapor Sorption Analyzer	TA instruments: Q5000SA	3'x3'		120		D-B	D-B	Y	
1	Gas permeability Instrument	Hilase - WaSul-Perm www.hilase.hu	3'x3'		120		D-B	D-B	Y	
1	Weights and balances workstation	existing	3'x3'		120		Existing to be relocated (moved from SERF W-129)	NREL		
1	Balance	Sartorius model SE2F, class 1 fisher cert #02-319DT)					D-B	D-B	Y	
1	Catalyst ink spray table and 2D robotic arm	I&J 7300A	2'x2'x3'	comp air	120	local	D-B	D-B	Y	
1	BET This is a common method of surface area determination using cryogenic temperature adsorption (BET stands for Bennet, Emitt & Teller)		5'x5'	N_2, Argon	120		D-B	D-B	Y	Specific requirements for sample size & ability to run on gases other than N_2 - e.g., Argon
1	XRD X-ray Diffraction		3'x5'		220		D-B	D-B	Y	
1	Digital Optical Microcope	omano.com					D-B	D-B	Y	
3	Fume Hood		6'				D-B	D-B		provide corrosive & flammable storage cabinets below
1	Laminar FlowFume Hood		6'				D-B	D-B		
1	Bench To[Environmental Chamber		4'X3'		220		D-B	D-B	Y	
4	Gas Cabinets						D-B	D-B		single cylinder
2	Flammable Storage		4'w x 2' h				D-B	D-B		
2	Corrosive Storage						D-B	D-B		cabinet, 22gal, self closing doors

C. Sensor Lab

1. **Mission:**
   a. The Sensor Lab tests hydrogen and its use for the development of codes and standards in order to take the current technology to the level it needs to be in the future.
2. **Existing Facility:** A walk-through was conducted of the current Sensor Lab in SERF; refer to photographs.

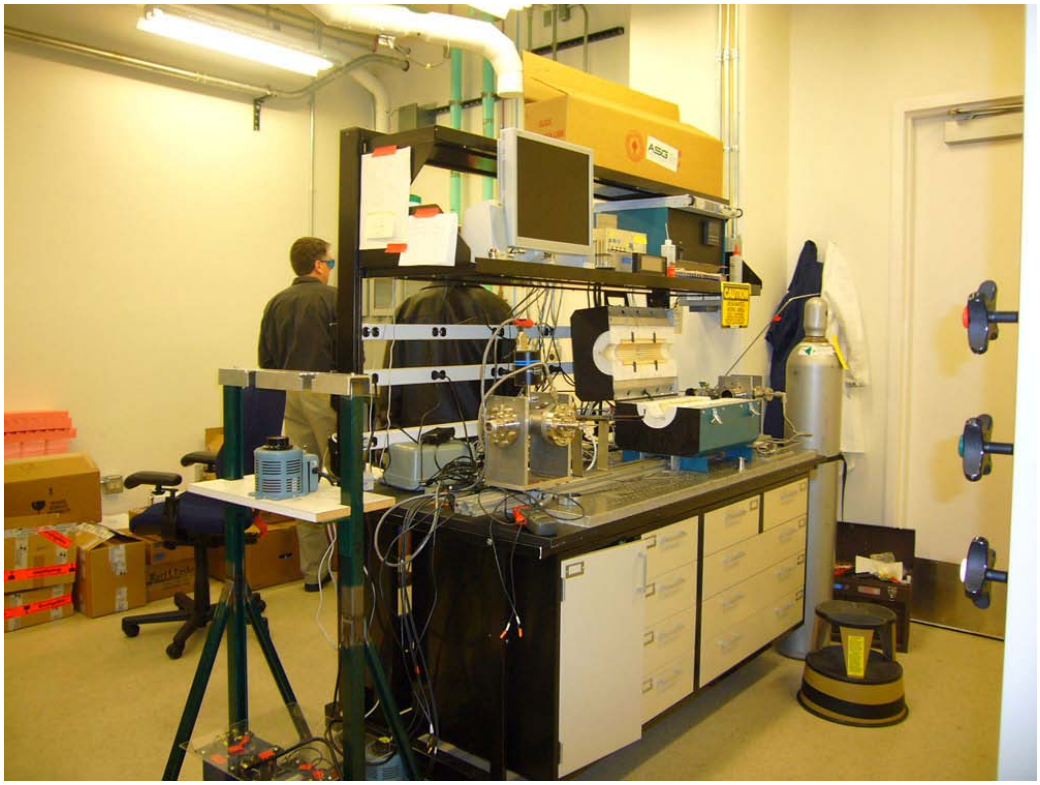

2.1 Existing Sensor Lab

2.2 Existing Sensor Lab

3. **Adjacency Requirements:**
   a. The lab will be shared by users of hydrogen, therefore should be near the Manufacturing Lab, MEA Lab and Hydrogen Systems Lab.
   b. It is desirable to have the offices near the labs.
   c. The offices should have some proximity to the Data Center also.
   d. These labs should also be near the common use Machine Shop.

4. **General Requirements:**
   a. High pressure testing will be done in the high pressure test lab, not this lab..
   b. Hydrogen pressures are generally low <1000 psi, cylinders are typically around 2000 psi.
   c. Hydrogen distribution shall be in stainless steel for a 3,000 psi standard.
   d. Other gases used in the lab include Nitrogen and compressed air; other gases will be used via small cylinders.
   e. Hydrogen use is on the order of 1 liter/minute.
   f. Two chemical fumehoods and a laminar flow hood/bench are required in this lab.
   g. Dilute H2S.
   h. Provide a walk in hood/plexiglass enclosure, 4′ x 5′ x 6′ clear height.
   i. 4″ to 6″ exhaust drop shall be provided for hookup.
   j. Standard epoxy tops are okay; some solvents are used.
   k. Continuous electrical power outlets at regular spacing over benches.
   l. Provide 2 epoxy sinks, eye wash (no drench hose) and emergency shower.
   m. RF shielding is required from Power Electronics Lab. This can be local to the experiment enclosure.
   n. Electrical power shall be clean. NREL will provide local UPS.
   o. There will be overhead service of power to the enclosure.
   p. There are no special lighting requirements. No windows required.

q. There will be 24/7 automated testing for maintaining standard temperatures.
r. Local -20c cooling will be provided with the equipment.
s. Provide a few outlets with 208/220V
t. Provide accurate temperature and humidity control and measurement of laboratory environmental conditions.

5. Casework:

a. Twelve (12) lineal feet of 8′ tall storage cabinets
b. 60 lineal feet of bench table top
c. Overhead cable tray
d. 25 lineal feet of under bench storage
e. 25 lineal feet of wall cabinets (above bench)
f. One (1) corrosive storage cabinet for acids and bases (below hoods)
g. One (1) flammable storage cabinet for solvents (below hoods)
h. Four (4) gas storage cabinets

6. Finishes:

a. Provide acid resistant and bermed flooring

7. Hazards Include:

a. Lab-scale chemical use
b. Hydrogen
c. Lab-scale use of dilute toxic gases
d. Dilute hydrogen sulfide (H2S)
e. Nitrous oxides

8. Equipment List:

Quant.	Item Name	Make & Model	Size & Weight	Mechanical	Electrical	Ventilation	NREL or D-B Procure	NREL or D-B Install	Research Equip. Allowance	Notes
HT&SC - Sensor Lab										
1	Safety Sensor Test Station	existing	5'X10'				Existing to be relocated (moved from SERF W-209)	NREL		
2	Fume Hood		6'				D-B	D-B		provide corrosive & flammable storage cabinets below. Sink in one.
1	Laminar Flow Hood		4'	ss exhaust			D-B	D-B		
1	Walk-in Hood/Plexiglass enclosure		4' x 5' x 6' clear height	exhuast			D-B	D-B		
4	Gas Cabinets						D-B	D-B		single cylinder
1	Flammable Storage		4'w x 2' h				D-B	D-B		
1	Corrosive Storage						D-B	D-B		
3	Lab Stools						D-B	D-B		

D. High Pressure Test Lab

1. Mission:

This lab conducts tests to evaluate and develop high pressure hydrogen storage components and systems. High pressure components and tanks may be tested with non-flammable mixtures in test cells designed for unintended pressure release.

2. General Requirements:

a. 500 SF lab with two (2) 10' x 10' x 16' high - High Pressure Test Cells (HPTC)
b. High Pressure Test Cells (HPTC):
   Room within lab for high pressure testing
   163 liters @ 10,000 psi is the maximum contained test volume. 3 atmospheres pressureis the Maximum Overpressure in test cell.
   Capable of withstanding catastrophic testing and failure of a vessel/tank:
   i. Steady state pressure
   ii. Doors to be interlocked (magnetic locks) & have blast seals. Provide emergency door release button on interior of HPTCs.
   iii. 110V
   iv. Oxygen monitoring
   v. Hydrogen detection
   vi. Nitrogen for purging
   vii. Camera
   viii. Mars(warning) Light: "test in progress" outside the room
   ix. EPO button

3. Rooms and Adjacencies:

a. Close to #18 Sensor laboratory (not critical).
b. Close to the hydrogen storage
c. Provide space outside for compressor; provide bollards around for protection
d. Provide at least two (2) exits.

4. Finishes:

a. Floor: thermal resistant and acid resistant; bermed
b. Other finishes: standard
c. Ceiling: 9'-0" minimum (except HPTC's); can be open to structure for lab area
d. HPTC's:
   i. blast resistant
   ii. 16' ceiling minimum

5. Laboratory Requirements:

a. General:
   i. Overhead door or double doors to outside to accommodate the largest vessel: 4'ϕ x 8'.
   ii. Provide area for control station for HPTC's
   iii. High Pressure Hydrogen testing will require a containment room or isolated facility
   iv. Provide safety interlocks on entry doorway

b. Casework: Black epoxy tops are acceptable
   i. 24 linear feet of bench top (located on one wall)
   ii. Provide space to install a metal working vice with 4" jaws.
   iii. 12 linear feet of base cabinets
   iv. 12 linear feet of upper cabinets with glass doors
   v. 12 linear feet of tall storage cabinets

vi. Sink; eyewash
vii. Provide one (1) corrosive storage cabinet and one (1) flammable gas cabinets (hydrogen)

c. Utilities/Gases/Chemicals:
   i. House compressed air, nitrogen, hydrogen

d. Mechanical/Electrical:
   i. Typical working hours
   ii. Sink; eyewash
   iii. HPTL: Maintain temperature 2±; typical humidity levels
   iv. 110V; one 220V outlet
   v. No special lighting requirements
   vi. Provide overhead cable tray

e. Fire Safety:
   i. Drop sprinkler heads down below light
      - Provide baffles to collect heat (similar to labs in SERF)
      - Provide guards on the heads
   ii. 110V; one 220V outlet
   iii. No special lighting requirements
   iv. Class I Division 2; Occupancy Type B classification

6. Hazards include:

a. High pressure hydrogen
b. Hydrogen
c. Lab-scale chemical use

7. Equipment List:

Quant.	Item Name	Make & Model	Size & Weight	Mechanical	Electrical	Ventilation	NREL or D-B Procure	NREL or D-B Install	Research Equip. Allowance	Notes
HT&SC - High Pressure Test Lab										
1	Hydrogen Compressor	Hydro-Pac H2 compressor model C12-40-7000LX or equivalent					D-B	D-B	Y	Install outside; piped to high pressure testing cells
1	Flammable Storage		4'w x 2' h				D-B	D-B		
1	Gas Cabinets						D-B	D-B		single cylinder; gas monitors
3	Lab Stools						D-B	D-B		

E. PEC Lab (Photoelectrochemical Materials Research Laboratory)

1. Mission:

Physical and photoelectrochemical characterization of novel materials with potential for photoelectrolysis. Synthesis of thin film semiconductors by electrodeposition.To characterize semiconductors for water splitting: direct water splitting into hydrogen (H_2) and oxygen (O_2). The goal is to generate hydrogen (H_2).

2. Existing Facility:

Current laboratory is divided into two spaces. The first space is primarily used for workspace, but does have some experiments conducted within it. Refer to walk-through photographs for additional information.

2.1 Existing PEC Lab

2.2 Existing PEC Lab

3. **General:**
   a. 2,000 SF – one (1) large lab
   b. Laboratory is more analytical, on the quiet side.
   c. Have limited use of synthesis of materials (most materials come from elsewhere)
   d. Do not do outdoor testing; use simulated light
   e. Do like natural light (need mechanical controls for exposure); current lab can be hot or cold depending on sunlight and season.
   f. Work with acids and bases
   g. Staff increases in the summer with interns.
   h. Provide four (4) fumehoods, as listed in the equipment list. Fumehood must be able to be fitted with a HEPA filter in case of future nano-material use.

4. **Rooms and Adjacencies:**
   a. Fairly independent: do have some relationships with #21 Fuel Cells and the #19 Hydrogen Systems Laboratories.
   b. Do have lots of visitors/tours
   c. Do not want to be near the heavy equipment laboratories, but should be connected to the Research Electrical Duct Bus.
   d. Intern workstations should be near the lab.

5. **Finishes:**
   a. Provide acid resistant floor with a coved, integral base (bermed).
   b. Walls & ceilings: standard laboratory finishes.

6. **Laboratory Requirements:**
   a. Door: 3'-0" width door with 2'-0" leaf.

b. Casework: Black epoxy tops are acceptable
   i. 300 linear feet of bench top.
   ii. Current lab has islands.
   iii. Provide 2 shelf, reagent shelving with end dams (to prevent items from sliding off shelf) @ island benches
   iv. Six (6) sinks: two (2) with hot and cold water; four (4) with cold water only.
   v. 100 linear feet of upper wall cabinets, provide 70/30 split between upper cabinets with glass doors and open cabinets (both to have adjustable shelving).
   vi. 250 linear feet of base cabinets: provide knee spaces: approximately 60/40 split between base drawer units and drawer/door units.
   vii. 12 linear feet of tall storage cabinets
   viii. Provide six (6) sinks
   ix. Provide sixteen (16) gas cylinder mounting brackets
   x. One (1) corrosive storage cabinet (20CF)
   xi. One (1) flammable storage cabinet (12 CF)

c. Utilities/Gases/Chemicals:
   i. House DI water with point of use water polishing (18 megohm)
   ii. Use gas cylinders secured to ends of benches for ultra-high pure gases (UHP)
   iii. House hydrogen (from # 19 Hydrogen Systems Lab), nitrogen (outlets near sinks)
   iv. Cylinder for Argon (UHP)
   v. Acids, bases
   vi. Solvents (8 liters maximum): store in flammable cabinet
d. Mechanical/Electrical:
   i. Provide normal temperature and humidity controls/ranges.
   ii. Standard business hours of operation/occupancy
   iii. Occasionally will have experiments extend over weekends.
   iv. 110V, GFCI (to protect equipment & per code)

7. Hazards include:

a. Basic chemistry including buffer solutions
b. Flammable solvents
c. Flammable gas - hydrogen

8. Equipment List:

Quant.	Item Name	Make & Model	Size & Weight	Mechanical	Electrical	Ventilation	NREL or D-B Procure	NREL or D-B Install	Research Equip. Allowance	Notes
HT&SC - PEC Lab										
1	Glove Box	existing	4'x3'		120		Existing to be relocated (moved from 16-2)	NREL		
1	W&B Table	existing	4'x4'				Existing to be relocated (moved from 16-2)	NREL		
2	Fume Hood		6'				D-B	D-B		provide corrosive storage cabinet under one hood and flammable storage cabinet under one hood (see below)
2	Fume Hood		4'				D-B	D-B		
1	Vented cabinet						D-B	D-B		
1	Dampening Table						future	n/a		provide 4' x 6' space
1	Flammable Storage		4'w x 2' h				D-B	D-B		
1	Corrosive Storage						D-B	D-B		
4	Lab Stools						D-B	D-B		

F. Fuel Cell Lab

1. Mission:

Bench top testing of Fuel Cells and Fuel Cell Stacks. Thermochemical, electrochemical, and thermomechanical analysis of fuel cell MEA materials.

2. Existing Facility:

A walk-through was conducted of the Fuel Cell Lab under construction in SERF; refer to photographs.

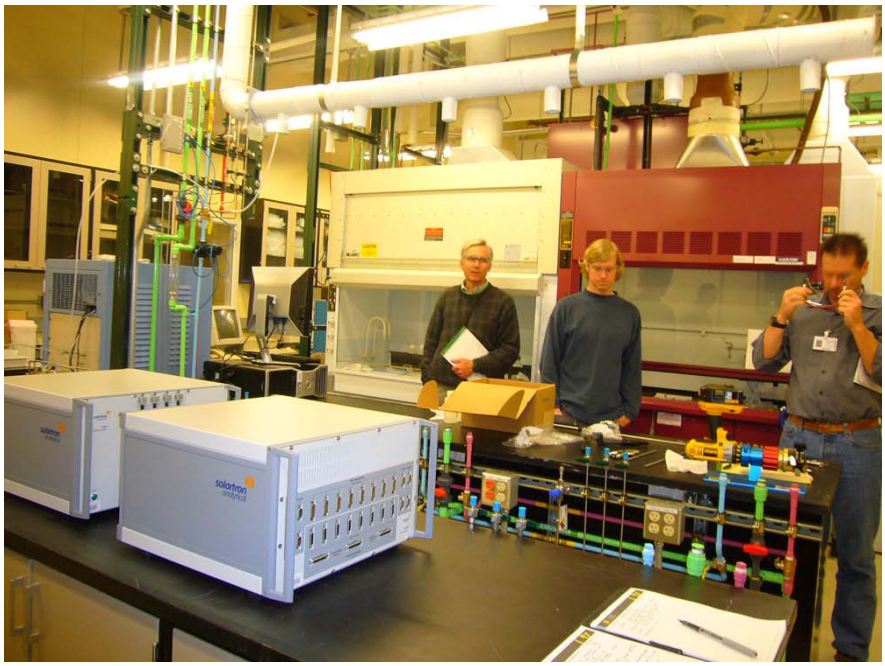

2.1 Existing Fuel Cell Lab

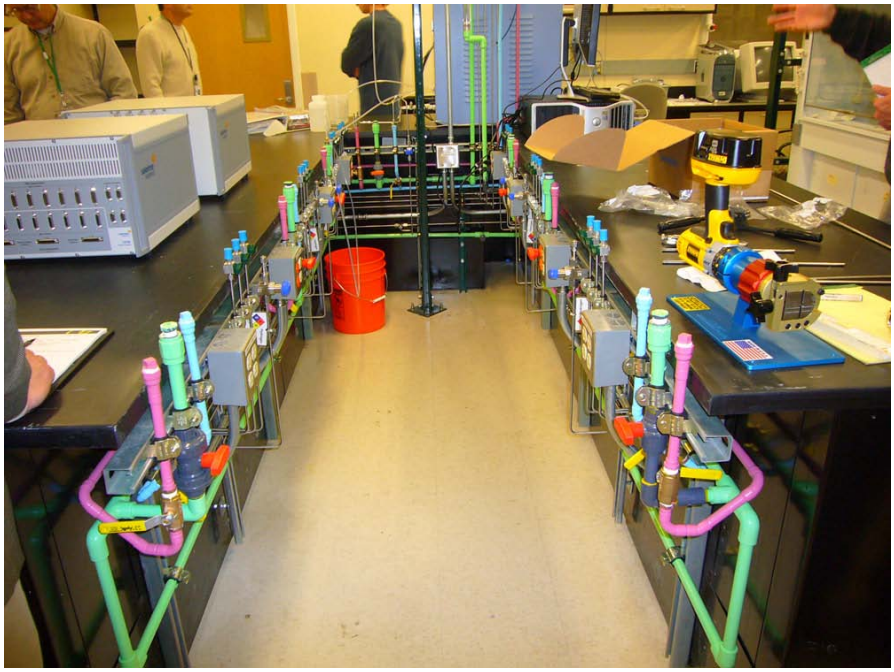

2.2 Existing Fuel Cell Lab

3. **General Requirements:**

   a. The current U shaped bench is not as useful as two parallel benches about 42" deep and 30" high, with space to walk between with services at the back of the bench. The bench space must have a lip so FC operator can have space for kneeling/leg work when working at bench and on computer and sitting on a stool.
   b. Provide local control of the variables for testing.
   c. Fuel cells are small; a single cell is less than 100 watts; even stacks are only about 100-400 sq cm in footprint area.
   d. Flow rates may be 2 liter/minute/station with about 7 stations, <10% LFL.
   e. More gases than present would be good, including: Dilute H_2S and CO for contamination.
   f. Contamination testing will be done inside a hood or plexiglass enclosure.
   g. Hydrogen, Nitrogen, O_2, Air and Helium are used. Regulators and gas cylinders could be stored outside the room in perhaps a service corridor, with regulators inside the lab. Liquid N_2 could also be stored in the corridor if necessary. Nitrogen could be in a liquid dewer for less than 1 liter per hour flow rate. Provide ten (10) gas cabinets for corridor or lab storage of cylinders.
   h. Monitoring detectors shall be installed for Hydrogen , Carbon monoxide, O_2, and H_2S
   i. RDE testing use house gases and will need 220v power.
   j. DI water 18 megaohms shall be provided.
   k. A cup sink shall be provided in hoods.
   l. Two sinks shall be provided and a water sensor on the floor (or floor drain).
   m. Benchtop test stations shall be serviced with about a 4"dia. "take away" exhaust vent line above. (See photo of existing condition).
   n. A shelf high above the bench surface, clearing the test band, shall be provided as well as an overhead service carrier.
   o. Standard bench casework to be provided at the perimeter of the room and one wall left without casework.
   p. Compressed air shall be filtered oil free.
   q. A double door shall be provided to the room.
   r. Provide a drain system for the disposal of waste water (clean) produced from fuel cell operation.
   s. Provide two (2) fume hoods as indicated on the equipment list. Fume hoods must be able to be fitted with HEPA filtration in case of future nano-material use.

4. **Rooms and Adjacencies:**

   a. It is critical that the Fuel Cell lab be adjacent to the MEA lab. The Fuel Cell Lab should also be adjacent to the Components/Sensor Lab.
   b. Rooms shall be separate, but share a door between for the movement of cells.
   c. The Fuel Cell Lab should also be near Manufacturing Lab and Machine Shop.
   d. The Fuel Cell Lab shall be connected to the REDB.

5. **Casework:**

   a. Twelve (12) lineal feet of 8' tall storage cabinets
   b. Twenty four (24) lineal feet of bench table top
   c. Overhead cable tray
   d. Twelve (12) lineal feet of under bench storage
   e. Twelve (12) lineal feet of wall cabinets (above bench)
   f. Ten (10) gas storage cabinets
   g. Two (2) flammable storage cabinets for general lab solvents

6. **Hazards Include:**

   a. Lab-scale flammable gases
   b. Mechanical
   c. Carbon Monoxide

7. **Equipment List:**

Quant.	Item Name	Make & Model	Size & Weight	Mechanical	Electrical	Ventilation	NREL or D-B Procure	NREL or D-B Install	Research Equip. Allowance	Notes
HT&SC - Fuel Cell Lab										
1	3X Fuel Cell test station	existing	8'x42" **		120		Existing to be relocated (moved from SERF W-129)	NREL		**include bench space for computer/monitor/mouse/keyboard
1	XRF	Spectro and Fischer Technologies	2'x2'x2'		120		D-B	D-B	Y	
1	RRDE/bi-potentiostat	Pine or VersaStat models	2'x43'		120		D-B	D-B	Y	
1	Microelectrode workstation	PARSTAT® 2273 from Princeton Applied Research for example for the potentiostat	2'x2'x2'		120		D-B	D-B	Y	essentially is a potentiostat, computer, software, relevant glassware, electrodes, and controlled temperature bath.
1	Fuel Cell Stack test station	FCT, Greenlight, or FuelCon --5 kw minimum power disipation requirements, 28 volt, as well as number of cells capable of being tested	5'x4'x6' **		220		D-B	D-B	Y	
1	Component thickness characterization workstation	existing	4'x2'x2'		120		Existing to be relocated (moved from SERF W-129)	NREL		
1	Aging stand workstation	existing	8'x42"		120		Existing to be relocated (moved from SERF W-129)	NREL		
1	Potentiostat/FRA	existing	2'x2'x2'		120		Existing to be relocated (moved from SERF W-129)	NREL		
1	Environmental chamber for membrane mechanical testing		2'x3'x4'		120		D-B	D-B	Y	
1	Porosimeter	Porous Materials Inc. Model CFP-1100A	3'x3'x3'	Comp Air	120		D-B	D-B	Y	

Quant.	Item Name	Make & Model	Size & Weight	Mechanical	Electrical	Ventilation	NREL or D-B Procure	NREL or D-B Install	Research Equip. Allowance	Notes
HT&SC - Fuel Cell Lab (pg. 2)										
1	GC		3'x4'		120		D-B	D-B	Y	key requirements: Specific detectors and ability to autosample. Compatibilityhook up to EGA system.
1	4X Potentiostat/FRA	Princeton Applied Research or Gamry/Solartron	2'x2'x2'		120		D-B	D-B	Y	
1	4X Fuel Cell test station	Fuel Cell Technologies	8'x42" **		120		D-B	D-B	Y	**include bench space for computer/monitor/mouse/keyboard
1	Segmented cell test station	3M	4'x42" **		120		D-B	D-B	Y	**include bench space for computer/monitor/mouse/keyboard
1	MEA infra-red test cell with IR Camera system	existing	3'x4'	H_2, N_2, air, O_2, He, Ar/CO		yes	Existing to be relocated (moved from SERF W-129)	D-B	Y	
1	18 Mohm Deionized Water system	Millipore Milli-Q					D-B	D-B	Y	
1	X-ray CT Microscope	MicroXCT or NanoXCT 3D X-ray Microscope	very large				D-B	D-B	Y	sits on floor
2	Fume Hood		6'				D-B	D-B		provide flammable storage cabinets below
1	Hot Press	Existing					Existing to be relocated from SERF W-129	NREL		
1	Power Supply	Existing					Existing to be relocated from SERF W-129	NREL		
10	Gas Cabinets						D-B	D-B		single cylinder
1	Hydrogen generator (PEM electrolyzer) for on-demand H_2 supply to fuel cell test stations						D-B	D-B	Y	
1	Air filtration system for particulates and oil and water mists to supply air to the fuel cell test stations.						D-B	D-B	Y	
6	Lab Stools						D-B	D-B		
2	Flammable Storage		4'w x 2' h				D-B	D-B		

G. Fuels Quality Lab

1. Mission:

Conduct hydrogen fuel quality testing and research fuel quality issues associated with hydrogen production.

2. General Requirements:

a. Few visitors are received and this lab seldom hosts tours.
b. Standard benches are acceptable for this lab.
c. No acoustical requirements.
d. Experiments run 24 hours and seven days a week. Occupancy is building standard.
e. Provide isolated workstation area (within main lab) for scanning electron microscope.

3. Rooms and Adjacencies:

a. Near Fuel Cell Testing Lab
b. Near Hydrogen Systems Lab (potential source of hydrogen for lab)
c. Need not be near loading dock
d. +/- 2 degrees F
e. Locate lab relatively close to HTSC Office Area

4. Finishes, Doors and Windows:

a. Building Standard doors acceptable.
b. Prefer no day-lighting
c. Acid resistant flooring, bermed required.

5. Gases and Utilities:

a. Gases are one liter per minute maximum.
   i. Nitrogen *
   ii. Hydrogen *
   iii. Argon
   iv. Compressed Air *
   v. Water at sink only.
   vi. DI Water (bottles).
   * = provide in chemical hood.
b. Provide gas monitors
c. Acids are diluted and stored for pick-up.
d. Provide capability to store other cylinder gases such as dilute CO and H2S.

6. Casework:

a. Twelve (12) lineal feet of 8′ tall storage cabinets
b. Twenty four (24) lineal feet of bench table top
c. Overhead cable tray
d. Twelve (12) lineal feet of out bench storage
e. Twelve (12) lineal feet of wall cabinets (above bench)
f. One (1) sink, in counter
g. One bench-height (30″) workstation with knee space for scanning electron microscope.

7. Equipment:

a. Fume hood, chemical, 4′ (one) Store chemical underneath
b. Fume hood, laminar, 4′ (one) with filtration on exhaust side
c. Provide snorkels at material prep workstations.
d. Refer to attached equipment list.

e. Provide two (2) separate vented cabinet for corrosives
f. Provide space and cylinder cabinets.
g. Eye wash and emergency shower per building standard.
h. Provide two (2) flammable storage cabinets for solvents
i. Provide four (4) gas storage cabinets

8. Hazards include:

a. Hydrogen
b. Flammable gases
c. Lab-scale toxic gases
d. Electrical Hazards

9. Equipment List:

Quant.	Item Name	Make & Model	Size & Weight	Mechanical	Electrical	Ventilation	NREL or D-B Procure	NREL or D-B Install	Research Equip. Allowance	Notes
HT&SC - Fuel Quality Lab										
1	Scanning Electron Microscope with Energy Dispersive Spectrometer (EDS)	FEI Quantum 600 with FEG and EDX			220V, UPS		D-B	D-B	Y	liquid nitrogen (provide dewar if not house supplied); locate away from high vibrations or provide isolated pad
1	Risidual Gas Analyzer - FTIR	MKS Multi-Gas 2030					D-B	D-B	Y	
1	GC Mass Spec	Hiden 300 amu mass range, mobile carte, 8 way multistream selector, heated version 65C					D-B	D-B	Y	Hydrogen dilution facility & sample isolation, Pressure guage monitoring & overpressure protection
1	Balance	Sartorius model SE2F, class 1 fisher cert #02-319DT)					D-B	D-B	Y	
1	Optical Microcope	Olympus BX-51					D-B	D-B	Y	
1	Weights and balances workstation	Table similar to Line 14, gawetmarble.com, tables & slabs	4'x4'		120		D-B	D-B	Y	
1	Fume Hood		4'				D-B	D-B		
1	Laminar Flow Hood		4'				D-B	D-B		
2	Flammable Storage		4'w x 2' h				D-B	D-B		
4	Gas Cabinets						D-B	D-B		
2	Corrosive Storage						D-B	D-B		
4	Lab Stools						D-B	D-B		

H. Secure Data Center

1. Mission:

This lab provides secure data storage and data analysis, relating to work done by both NREL and industry partners.

2. Existing Facility:

There are currently two computer server rooms. Both were former offices located along the exterior window wall. Each is approximately 100 SF.

a. Room HSDC-01 contains the higher-security servers. The room also contains a UPS, a physical safe (about 2' square in plan and about 6' tall), a UPS, and four workstations. Security measures include a physical log book to enter all information transfers (in and out), silent and audible alarms, motion sensors above the lay-in ceiling, a key pad and keyed door lock, a badge reader (inside room) and a locked tower for the computers.
b. Room HSDC-02 contains a mini server tower and is less secure than HSDC-01. It has three workstations. Security measures are similar to HSDC-01, but less stringent.

3. General:

a. The existing rooms are regularly occupied, and therefore windows are important to a good work environment. The server room need not have windows.
b. Planning for visitors is not a design consideration.

4. Rooms and Adjacencies:

a. HPC Data Center: locate both servers within the HPC Data Center Provide space for three racks. Racks must be physically secured. Secure data cable runs must be run from the Secure Data Center area within the HPC Data Center to/from the Secure Workstation Area. Should be reasonably close to the Secure Workstation Area, but need not be adjacent. Power and conditioning required 24/7.
b. Education Multi-media Lab and Secure Conference Room: minimize and secure data cable runs from servers. Computers must be hardwired to secure conference room. This room is used to present the data located within the secure data center.

5. Finishes:

Standard finishes are acceptable, including carpeting.

6. Equipment List:

Quant.	Item Name	Make & Model	Size & Weight	Mechanical	Electrical	Ventilation	NREL or D-B Procure	NREL or D-B Install	Research Equip. Allowance	Notes
HT&SC - Secure Data Center										
1	computer cabinet		29 x 36 x 84	-	110V	-	D-B	D-B	Y	airflow throughout the cabinet to keep equipment cool. combination lock
2	server racks	existing	29 x 36 x 84		110v		Existing to be relocated (moved from 16-162)	NREL		airflow throughout the cabinet to keep equipment cool. combination lock 2,000 lbs capacity
2	Lab Stools						D-B	D-B		

I. Education Multi-Media Lab and Secure Conference Room

1. Mission:

a. Provide Secure Conference Room space in support of the secure data center and secure work stations area. Room is frequently used for webinars.

2. General Requirements:

a. The combination of the Secure Conference Room with the EMM lab requires the addition of a secure (lockable) network connection to the Secure Data Center facility.

3. Rooms and Adjacencies:

The room shall be directly adjacent to the secured data center and the secured workstation area.

4. Finishes:

a. Provide structured office finishes
b. Provide space for up to 13 people
c. Room shall have video conferencing capabilities, presentation lighting controlled by the video conference system, and multiple computer points that can be switched between.
d. Provide power to tables

5. Equipment List:

Quant.	Item Name	Make & Model	Size & Weight	Mechanical	Electrical	Ventilation	NREL or D-B Procure	NREL or D-B Install	Research Equip. Allowance	Notes
HT&SC - Education/Multi Media Lab and Secure Conference Room Equipment List										
1	Projector						D-B	D-B	Y	
1	Smartboard						D-B	D-B	Y	Five (5) network links
1	Whiteboard						D-B	D-B		
1	Projection Screen (automated)						existing	D-B		
1	Credenza						existing	D-B		
1	Conference Table		12' x 4'				D-B	D-B		Provide Pop-ups for network, monitor, audio and telephone connections
1	Computer System Equipment						existing	D-B		
1	Web Camera						D-B	D-B	Y	
13	Task Chairs						D-B	D-B		
1	DVD Player						D-B	D-B	Y	
1	Monitor		42"				D-B	D-B	Y	Required for DVD Player
1	Audio for Room						D-B	D-B	Y	

J. Secure Workstation Area

1. **Mission:** To analyze data on secure servers located in the secure data center.

2. **General Requirements:**

   Provide seven (7) 72-SF workstations within a hard walled room. Provide a secure network connection to both the Education Multi-media Lab/Secure Conference Room and the Secure Data Center. Access must be made available 24 hours per day and seven days per week.

   a. Room shall have exterior windows, but visual access into the room shall be controlled.
   b. Room lighting shall have dimming capability.
   c. Room has unique security requirements. Security measures include a silent alarm, an audible alarm, motion sensors above the lay-in ceiling system, a key pad and keyed door lock, and a badge reader (inside the room). Refer to Specifications, Section 6 for additional information.
   d. Room shall have battery back-up power.
   e. Visitors are not permitted within the room.

3. **Room and Adjacencies:**

   Room shall be located in the HTSC Office Area, and adjacent to the Education Multi-Media Lab/Secure Conference Room. Adjacency to the Secure Data Center is not required.

4. **Equipment List:**

Quant.	Item Name	Make & Model	Size & Weight	Mechanical	Electrical	Ventilation	NREL or D-B Procure	NREL or D-B Install	Research Equip. Allowance	Notes
HT&SC- Secure Workstation Area										
1	Fireproof Safes	existing	2' x 2' x 6'	-	-	-	Existing to be relocated (moved from 16-162)	NREL		
1	Fireproof Safes		2' x 2' x 6'	-	-	-	NREL	NREL		
4	Workstations	existing					Existing to be relocated (moved from 16-162)	D-B		Access to Secure Data Center Servers (Line 87) Required. Connection by ethernet cable is sufficient, no length minimum required
3	Workstations						D-B	D-B		Access to Secure Data Center Servers (Line 87) Required. Connection by ethernet cable is sufficient, no length minimum required

SECTION 00010 - TABLE OF CONTENTS

2) D22 - PLUMBING FIXTURES
3) D23 - DOMESTIC WATER
4) D24 - SANITARY WASTE AND VENT
5) D25 - RAIN WATER DRAINAGE

c. D3 - HVAC - HEATING, VENTILATING, AND AIR CONDITIONING
1) D31 - ENERGY SUPPLY
2) D32 - HEAT GENERATION
3) D33 - REFRIGERATION
4) D34 - AIR DISTRIBUTION
5) D35 - HYDRONIC AND STEAM DISTRIBUTION
6) D36 - HVAC CONTROLS

d. D4 - FIRE PROTECTION
1) D41 - FIRE SPRINKLER AND EXTINGUISHING SYSTEMS
2) D43 – FIRE DETECTION AND ALARM
3) D45 - FIRE PROTECTION SPECIALTIES

e. D5 - ELECTRICAL POWER
1) D51 - ELECTRICAL ENERGY GENERATION
2) D52 - SERVICE AND DISTRIBUTION
3) D53 - BRANCH CIRCUITS
4) D59 - OTHER ELECTRICAL POWER ELEMENTS

f. D6 - ARTIFICIAL LIGHTING
1) D61 - INTERIOR LIGHTING
2) D62 - EXTERIOR AREA LIGHTING

g. D7 - TELECOMMUNICATIONS
1) D71 - VOICE AND DATA
2) D72 - SOUND REINFORCEMENT
3) D73 – DISTRIBUTED ANENNA

h. D8 – RESEARCH UTILITIES
1) D-83 – PROCESS GASES

I. D9 - OTHER SERVICES
1) D92 - SURVEILLANCE AND SECURITY CONTROLS
2) D93 - SPECIAL GROUNDING SYSTEMS
3) D94 - CATHODIC PROTECTION
4) D99 – LABORATORY SERVICE ELEMENTS
D-99A – FUEL CELL LABORATORY
D-99B – OUTDOOR TEST AREA
D-99C – SECURE DATA CENTER
D-99D – EDUCATION MULTI-MEDIA LAB & SECURE CONFERENCE ROOM
D-99E – HIGH PERFORMANCE COMPUTING DATA CENTER
D-99F – APPLIED BATTERY AND ELECTROMATICS LAB
D-99G – HIGH BAY MAIN LABORATORY
D-99H – COMMERICAL BUILDING HIGH BAY LABORATORY
D-99I – VSHOT HIGH BAY LABORATORY
D-99J – HIGH BAY CONTROL ROOM
D-99K – HIGH VOLTAGE/HIGH CURRENT LABORATORY
D-99L – POWER ELECTRONICS LABORATORY
D-99M – SMART GRID LABORATORY
D-99N – INSTRUMENT DEVELOPMENT LABORATORY
D-99O – HYDROGEN SYSTEMS LABORATORY
D-99P – MACHINE SHOP
D-99Q – ENERGY STORAGE LABORATORY
D-99R – ELECTRICAL VISUALIZATION LABORATORY
D-99S – ZERO ENERGY BUIDLING (ZEB) SIMULATION LABORATORY

END OF TABLE OF CONTENTS

SECTION 00020 INTRODUCTION

The Performance Specifications are intended to extend and complement the information in the project program by describing acceptable levels of facility performance, quality of materials and systems, and the means of demonstrating compliance (substantiation). The chapters define the basic elements of the facility using CSI's Uniformat organizational structure, and each chapter is further broken down into sub-chapters to define detail of elements described in general terms in the broad-scope chapters. Substantiation requirements are sometimes defined in the broad-scope chapters and sometimes in the sub-chapters, but it is intended to not repeat substantiation requirements in more than one location. Section 7 ("Substantiation Spreadsheet") is a summary of all substantiation requirements after award of contract. Refer to Section 4 for substantiation requirements to be included with the proposal.

SECTION 00840

REFERENCED DOCUMENTS

APPLICABILITY

A. The documents referenced in the RFP (and those which may be listed herein, but are not found in the RFP) are a part of the Proposal and govern the design and construction.

B. Unless otherwise indicated, follow version of reference documents in effect at time of contract award.

GOVERNMENT REGULATIONS AND PUBLICATIONS

A. Buy American Act

B CFR - Code of Federal Regulations, United States Government:

1. 16 CFR 1201 - Safety Standard for Architectural Glazing Materials; Consumer Product Safety Commission; current edition.
2. 29 CFR 1910 - Occupational Safety and Health Standards; Occupational Safety and Health Administration; current edition.
3. 36 CFR 1191 - Americans with Disabilities Act Accessibility Guidelines for Buildings and Facilities; Final Guidelines and Amendment to Final Guidelines (ADAAG); Architectural and Transportation Barriers Compliance Board; current edition; reprinted compiling all revisions, September 1994.

C. U.S. Government Standards:

1. FED-STD-795 - Uniform Federal Accessibility Standards; April 1, 1988 (UFAS).

MODEL CODE ORGANIZATIONS

A. ICBO - International Conference of Building Officials:

1 ICC - International Code Council, Inc.:

a. ICC (IBC) - International Building Code; 2006.

b. IC (IEC) - International Electrical Code Provisions; 2006.

c . IC (IECC) - International Energy Conservation Code; 2006.

d. IC (IFC) - International Fire Code; 2006.

NON-GOVERNMENTAL STANDARDS DEVELOPING ORGANIZATIONS

A. AAMA - American Architectural Manufacturers Association:

1. AAMA 1503 - Voluntary Test Method for Thermal Transmission and Condensation Resistance of Windows, Doors, and Glazed Wall Sections; 1998.
2. AAMA 2604 - Voluntary Specification, Performance Requirements and Test Procedures for High Performance Organic Coatings on Aluminum Extrusions and Panels; 2005.
3. AAMA 2605 - Voluntary Specification, Performance Requirements and Test Procedures for Superior Performing Organic Coatings on Aluminum Extrusions and Panels; 2005.
4. AAMA GDSG-1 - Glass Design for Sloped Glazing; 1987.
5. AAMA TSGG - Two-Sided Structural Glazing Guidelines for Aluminum Framed Skylights; 2004.

B. AASHTO - American Association of State Highway and Transportation Officials:

1. AASHTO GDPS - Guide for Design of Pavement Structures, Volume 1; 1993 with 1998 supplement.

2. AASHTO GDPSV2-3 - Guide for Design of Pavement Structures, Volume 2; 1986.
3. AASHTO GDHS - A Policy on Geometric Design of Highways and Streets; 2004.

C. AATCC - American Association of Textile Chemists & Colorists:

1. AATCC Test Method 16 - Test Method for Colorfastness to Light; 2004.
2. AATCC Test Method 134 - Electrostatic Propensity of Carpets; 2006.
3. AATCC Test Method 174 - Antimicrobial Activity Assessment of Carpets; 2001 (Re-approved 2007).

D. ACI - American Concrete Institute International:

1. ACI 201.2R - Guide to Durable Concrete; 2001.
2. ACI 302.1R - Guide for Concrete Floor and Slab Construction; 2004 (Errata 2007).

E. AMCA - Air Movement and Control Association, Inc.:

1. ANSI/AMCA 210 - Laboratory Methods of Testing Fans for Aerodynamic Performance Rating; 2007.

F. ANSI - American National Standards Institute:

1. ANSI A14.3 - American National Standard for Ladders -- Fixed -- Safety Requirements; 2002.
2. ANSI A250.4 - American National Standard Test Procedure and Acceptance Criteria for Physical Endurance for Steel Doors and Hardware Reinforcings; 2001.
3. ANSI B30.2 - Overhead and Gantry Cranes (Top Running Bridge, Single or Multiple Girder, Top Running Trolley Hoist.
4. ANSI B30.11 - Monorails and Underhung Cranes.
5. ANSI B30.17 - Overhead and Gantry Cranes (Top Running Bridge, Single Girder, Under-hung Hoist).
6. ANSI MH29.1 - American National Standard for Safety Requirements for Industrial Scissors Lifts; 2003.
7. ANSI MH30.1 - American National Standard for the Safety, Performance and Testing of Dock Leveling Devices; 2007.
8. ANSI Z359.1 - Safety Requirements for Personal Fall Arrest Systems, Subsystems and Components; 2007

G. AHRI - Air-Conditioning, Heating, and Refrigeration Institute:

H. ASCE - American Society of Civil Engineers:

1. ASCE 7 - Minimum Design Loads for Buildings and Other Structures; 2005.

I. ASHRAE - American Society of Heating, Refrigerating and Air-Conditioning Engineers:

1. ASHRAE (HVACA) - ASHRAE Handbook - HVAC Applications; 2007.
2. ASHRAE Std 15 - Safety Code for Mechanical Refrigeration; 2007.
3. ASHRAE Std 52.1 - Gravimetric and Dust-Spot Procedures for Testing Air-Cleaning Devices Used in General Ventilation for Removing Particulate Matter; 2003.
4. ANSI/ASHRAE Std 55 - Thermal Environmental Conditions for Human Occupancy; 2004.
5. ANSI/ASHRAE Std 62.1 - Ventilation for Acceptable Indoor Air Quality; 2007 (errata 2008).
6. ASHRAE Std 90.1 - Energy Efficient Design of new Buildings Except Low-Rise Residential Buildings; 2007.

7. ANSI/ASHRAE 110 - Method of Testing Performance of Laboratory Fume Hoods.

J. ASME - American Society of Mechanical Engineers:

1. ANSI/ASME A13.1 - Scheme for the Identification of Piping Systems; 1996 (Reaffirmed 2002).
2. ASME A17.1 - Safety Code for Elevators and Escalators; 2004.
3. ASME (BPV IV) - Boiler and Pressure Vessel Code, Section IV, Rules for Construction of Heating Boilers; 2007.
4. ASME (BPV VIII, 1) - Boiler and Pressure Vessel Code, Section VIII, Rules for the Construction of Pressure Vessels; 2004.

K. ASTM - ASTM International:

1. ASTM B 117 - Standard Practice for Operating Salt Spray (Fog) Apparatus; 2007a.
2. ASTM C 755 - Standard Practice for Selection of Vapor Retarders for Thermal Insulation; 2003.
3. ASTM C 1028 - Standard Test Method for Determining the Static Coefficient of Friction of Ceramic Tile and Other Like Surfaces by the Horizontal Dynamometer Pull-Meter Method; 2007.
4. ASTM C 1184 - Standard Specification for Structural Silicone Sealants; 2005.
5. ASTM C 1199 - Standard Test Method for Measuring the Steady State Thermal Transmittance of Fenestration Systems Using Hot Box Methods; 2000.
6. ASTM C 1363 - Standard Test Method for the Thermal Performance of Building Assemblies by Means of a Hot Box Apparatus; 2005.
7. ASTM D 2047 - Standard Test Method for Static Coefficient of Friction of Polish-Coated Floor Surfaces as Measured by the James Machine; 2004.
8. ASTM D 2239 - Standard Specification for Polyethylene (PE) Plastic Pipe (SIDR-PR) Based on Controlled Inside Diameter; 2003.
9. ASTM D 2244 - Standard Practice for Calculation of Color Differences From Instrumentally Measured Color Coordinates; 2007.
10. ASTM D 2447 - Standard Specification for Polyethylene (PE) Plastic Pipe, Schedules 40 and 80, Based on Outside Diameter; 2003.
11. ASTM D 2609 - Standard Specification for Plastic Insert Fittings for Polyethylene (PE) Plastic Pipe; 2002.
12. ASTM E 72 - Standard Test Methods of Conducting Strength Tests of Panels for Building Construction; 2005.
13. ASTM E 84 - Standard Test Methods for Surface Burning Characteristics of Building Materials; 2008.
14. ASTM E 90 - Standard Test Method for Laboratory Measurement of Airborne Sound Transmission Loss of Building Partitions and Elements; 2004.
15. ASTM E 96/E 96M - Standard Test Methods for Water Vapor Transmission of Materials; 2005.
16. ASTM E 108 - Standard Test Methods for Fire Tests of Roof Coverings; 2007a.
17. ASTM E 283 - Standard Test Method for Determining the Rate of Air Leakage Through Exterior Windows, Curtain Walls, and Doors Under Specified Pressure Differences Across the Specimen; 2004.
18. ASTM E 330 - Standard Test Method for Structural Performance of Exterior Windows, Doors, Skylights and Curtain Walls by Uniform Static Air Pressure Difference; 2002.

19. ASTM E 331 - Standard Test Method for Water Penetration of Exterior Windows, Skylights, Doors, and Curtain Walls By Uniform Static Air Pressure Difference; 2000.
20. ASTM E 336 - Standard Test Method for Measurement of Airborne Sound Attenuation between Rooms in Buildings; 2007.
21. ASTM E 413 - Classification for Rating Sound Insulation; 2004.
22. ASTM E 648 - Standard Test Method for Critical Radiant Flux of Floor-Covering Systems Using a Radiant Heat Energy Source; 2008.
23. ASTM E 662 - Standard Test Method for Specific Optical Density of Smoke Generated by Solid Materials; 2006.
24. ASTM E 736 - Standard Test Method for Cohesion/Adhesion of Sprayed Fire Resistive Materials Applied to Structural Members; 2000 (Re-approved 2006).
25. ASTM E 760 - Standard Test Method for Effect of Impact on Bonding of Sprayed Fire Resistive Material Applied to Structural Members; 1992 (Re-approved 2005).
26. ASTM E 966 - Standard Guide for Field Measurement of Airborne Sound Insulation of Building Facades and Facade Elements; 2004.
27. ASTM E 1007 - Standard Test Method for Field Measurement of Tapping Machine Impact Sound Transmission Through Floor-Ceiling Assemblies and Associated Support Structures; 2004.
28. ASTM E 1111 - Standard Test Method for Measuring the Interzone Attenuation of Open Office Components; 2007.
29. ASTM E 1130 - Standard Test Method for Objective Measurement of Speech Privacy in Open Offices Using Articulation Index; 2002.
30. ASTM E 1155 - Standard Test Method for Determining F (F) Floor Flatness and F (L) Floor Levelness Numbers; 1996 (Re-approved 2008); or ASTM E 1155M; 1996 (Re-approved 2008).
31. ASTM E 1300 - Standard Practice for Determining Load Resistance of Glass in Buildings; 2007.
32. ASTM E 1414 - Standard Test Method for Airborne Sound Attenuation Between Rooms Sharing a Common Ceiling Plenum; 2006.
33. ASTM E 1477 - Standard Test Method for Luminous Reflectance Factor of Acoustical Materials by Use of Integrating-Sphere Reflectometers; 1998a (Re-approved 2003).
34. ASTM E 1677 - Standard Specification for Air Barrier (AB) Material or System for Low-Rise Framed Building Walls; 2005.
35. ASTM F 476 - Standard Test Methods for Security of Swinging Door Assemblies; 1984 (Re-approved 2002).
36. ASTM F 588 - Standard Test Methods for Measuring the Forced Entry Resistance of Window Assemblies, Excluding Glazing Impact; 2007.
37. ASTM F 793 - Standard Classification of Wall Covering by Use Characteristics; 2007.
38. ASTM F 842 - Standard Test Methods for Measurement of Forced Entry Resistance of Horizontal Sliding Door Assemblies, Excluding Glazing Impact; 2004.
39. ASTM F 1233 - Standard Test Method for Security Glazing Materials and Systems; 1998 (Re-approved 2004).

L. BHMA - Builders Hardware Manufacturers Association:

1. ANSI/BHMA A156.2 - American National Standard for Bored and Preassembled Locks & Latches; 2003.
2. ANSI/BHMA A156.3 - American National Standard for Exit Devices; 2001.
3. ANSI/BHMA A156.5 - American National Standard for Auxiliary Locks & Associated Products; 2001.
4. ANSI/BHMA A156.12 - American National Standard for Interconnected Locks & Latches; 2005.
5. ANSI/BHMA A156.13 - American National Standard for Mortise Locks & Latches; 2005.

M. IEEE - The Institute of Electrical and Electronics Engineers:

1. IEEE 81 - IEEE Guide for Measuring Earth Resistivity, Ground Impedance, and Earth Surface Potentials of a Ground System (Part 1); 1983.
2. IEEE 142 - IEEE Recommended Practice for Grounding of Industrial and Commercial Power Systems; 2007.
3. IEEE 241 - IEEE Recommended Practice for Electric Power Systems in Commercial Buildings; 1990 (R1997).
4. IEEE 493 - IEEE Recommended Practice for the Design of Reliable Industrial and Commercial Power Systems; 2007.
5. IEEE 739 - IEEE Recommended Practice for Energy Management in Industrial and Commercial Facilities; 1995.
6. IEEE 1100 - IEEE Recommended Practice for Powering and Grounding Sensitive Electronic Equipment; 2005.
7. IEEE C57.12.00 - General Requirements for Liquid Immersed Distribution, Power, and Regulating Transformers; 2006.

N. IESNA - Illuminating Engineering Society of North America:

1. IESNA (LH) - Lighting Handbook; 2000.
2. IESNA RP-5 - Recommended Practice of Daylighting; 1999.
3. ANSI/IESNA RP-8 - American National Standard Practice for Roadway Lighting; 2000(R2005).

O. NAAMM - National Association of Architectural Metal Manufacturers:

1. NAAMM HMMA 862 - Guide Specifications for Commercial Security Hollow Metal Doors and Frames; 2003.

P. NEMA - National Electrical Manufacturers Association:

1. NEMA 250 - Enclosures for Electrical Equipment; 2003

Q. NETA - National Electrical Testing Association:

1. Acceptable Testing Specifications for Electrical Power Distribution and Systems.

R. NFPA - National Fire Protection Association:

1. NFPA 10 - Standard for Portable Fire Extinguishers; 2007.
2. NFPA 13 - Standard for the Installation of Sprinkler Systems; 2007.
3. NFPA 14 - Standard for the Installation of Standpipe, Private Hydrant, and Hose Systems; 2007.
4. NFPA 17 - Standard for Dry Chemical Extinguishing Systems; 2002.
5. NFPA 20 - Standard for the Installation of Stationary Pumps for Fire Protection; 2007.

6. NFPA 25 - Standard for the Inspection, Testing, and Maintenance of Water-Based Fire Protection Systems; 2008.
7. NFPA 30 - Flammable and Combustible Liquids.
8. NFPA 37 - Installation and use of Stationary Combustion Engines and Turbins.
9. NFPA 45 - Fire Protection for Laboratories Using Chemicals.
10. NFPA 52 - Vehicular Fuel Systems.
11. NFPA 54 - National Fuel Gas Code.
12. NFPA 55 - Compressed Gases.
13. NFPA 68 - Explosion Protections.
14. NFPA 70E - National Electrical Code; 2008.
15. NFPA 72 - National Fire Alarm Code; 2007.
16. NFPA 75 - Protection of Information Technology Equipment.
17. NFPA 77 - Static Electricity.
18. NFPA 79 - Industrial Machinery.
19. NFPA 80 - Standard for Fire Doors and Fire Windows; 2007.
20. NFPA 85 - Boiler and Combustion Systems.
21. NFPA 101 - Code for Safety to Life from Fire in Buildings and Structures; 2006.
22. NFPA 110 - Emergency and Standby Power Systems.
23. NFPA 170 - Fire Safety and Emergency Symbols.
24. NFPA 497 - Classification of Flammable Liquids, Gases or Vapors.
25 NFPA 690 – Photovoltaic Systems
25. NFPA 853 - Stationary Fuel Cell Power Systems.

S. PECI - Portland Energy Conservation, Inc.:

T. SMACNA - Sheet Metal and Air Conditioning Contractors' National Association, Inc.:

1. SMACNA (ASMM) - Architectural Sheet Metal Manual; 2003.
2. SMACNA (DCS) - HVAC Duct Construction Standards; 2005.

U. TIA - Telecommunications Industry Association:

V. USGBC - U. S. Green Buildings Council, www.usgbc.org

1. USGBC LEED-NC - LEED Green Building Rating System For New Construction & Major Renovations; Version 2.2, 2005.

PRIVATE EVALUATION ORGANIZATIONS

A. NFRC - National Fenestration Rating Council

B. UL - Underwriters Laboratories Inc.:

1. ANSI/UL 972 - Burglary Resisting Glazing Material; 2006.

ADDITIONAL REQUIREMENTS - IN ADDITION TO THE REFERENCED DOCUMENTS, COMPLY WITH THE

FOLLOWING "LAWS AND REGULATIONS" TO WHICH ALL WORK AT NREL FACILITIES MUST COMPLY:

A. CODE OF FEDERAL REGULATIONS (CFR)

1. 10 CFR 8.4 Interpretation by the General Counsel: AEC Jurisdiction
2. 10 CFR 835 Occupational Radiation Protection (Except Sections 101 (c), ALARA Plans and Measures, 402 (h), DOE Laboratory Accreditation Program for Personal Dosimetry, 901, General Employee Training, and 902, Radiological Workers Training)
3. 10 CFR 851 Worker Safety and Health Program
4. 10 CFR 1021 DOE NEPA Implementing Regulations, Subtitle B - DOE Decision making
5. 10 CFR 1021 DOE NEPA Implementing Regulations, Subtitle D - Typical Classes of Actions (Including ref. Appendices A-D)
6. 051-1 Act of 1970, Section 5 (a) (1) - General Duty Clause
7. 29 CFR 1904 OS1-3A Recordkeeping and Reporting Occupational Injuries and Illness
8. 29 CFR 1926 Occupational Safety and Health Standards for the Construction Industry
9. 33 CFR 320 General Regulatory Policies
10. 33 CFR 323 Permits for Discharges of Dredged or Fill Material into Waters of the United States
11. 33 CFR 325 Processing of Department of the Army Permits
12. 33 CFR 328 Definition of Waters of the United States
13. 33 CFR 330 Nationwide Permits
14. 36 CFR 63 Determination of Eligibility for Inclusion in the National Register of Historic Places
15. 36 CFR 65 National Historic Landmarks Program
16. 36 CFR.78 Waiver of Federal agency responsibilities under section 110 of the National Historic Preservation Act
17. 36 CFR 79 Curation of Federally-Owned and Administered Archaeological Collections.
18. 36 CFR 800 Protection of Historic and Cultural Properties
19. 40 CFR 50 National Primary and Secondary Ambient Air Quality Standards
20. 40 CFR 61 National Emission Standards for hazardous Air Pollutants
21. 40 CFR 66 Assessment and Collection of Noncompliance Penalties by EPA
22. 40 CFR 79 Registration of Fuels and Fuel Additives
23. 40 CFR 82 Protection of Stratospheric Ozone
24. 40 CFR 88 Clean Vehicles
25. 40 CFR 110 Discharge of Oil
26. 40 CFR 112 Oil Pollution Prevention
27. 40 CFR 113 Liability Limits for Small 01/Share Storage Facilities
28. 40 CFR. 116 Designation of Hazardous Substances
29. 40 CPR 117 Determination of Reportable Quantities for Hazardous Substances

30. 40 CFR 122 EPA Administered Permit Programs: The National Pollutant Discharge Elimination System (NPDES)
31. 40 CFR 131 Water Quality Standards
32. 40 CFR 141 National Primary Drinking Water Regulations
33. 40 CFR 142 National Primary Drinking Water Regulations Implementation
34. 40 CFR 166 Exemption of Federal and State Agencies for use of Pesticides under Emergency Conditions
35. 40 CFR 171 Certification of Pesticide Applicators
36. 40 CFR 260-270 Resource Conservation and Recovery Act (RCRA)
37. 40 CFR 261 Identification and Listing of Hazardous Waste
38. 40 CFR 262 Standards Applicable to Generators of Hazardous Waste
39. 40 CPR 268 Land Disposal Restrictions
40. 40 CFR 273 Standards for Universal Waste Management
41. 40 C.FR. 279 Standards for the Management of Used Oil
42. 40 CFR 302 Designation, Reportable Quantities, and Notification (CERCLA)
43. 40 CFR 355 Emergency Planning and Notification (CERCLA)
44. 40 CFR 370 Hazardous Chemical Reporting: Community Right -To-Know
45. 40 CFR 401 General Provisions - Effluent Guideline and Standards
46. 40 CFR 403 General Pretreatment Regulations for Existing and New Sources of Pollution
47. 40 CFR 763 Subpart G - Asbestos Abatement Projects
48. 49 CFR 107-199 Transportation - Hazardous Materials Regulations
49. 49 CFR. 382-399Transportation - Federal Motor Carrier Safety Regulations
50. 50 CFR 17 Endangered and Threatened Wildlife and Plants
51. 50 CFR 402 Interagency Cooperation - Endangered Species Act of 1973
52. 50 CFR 424 Listing Endangered and Threatened Species and Designating Critical Habitat
53. 50 CFR 450 General Provisions - Endangered Species Exemption Process
54. 50 CFR 451 Application Process

B. UNITED STATES CODE (USC)

1. 7 USC 136 et seq. - Environmental Pesticide Control Act
2. 7 USC 136 et seq. - Federal Insecticide, Fungicide, and Rodenticide Act .
3. 7 USC 7701 Plant Protection Act 2000 (as amended by the Noxious Weed Control and Eradication Act 2004)
4. 15 USC 2601 et seq.- Toxic Substances Control Act, Title 11 (Asbestos Hazard Emergency Response)
5. 16 USC 431 et seq. - Antiquities Act of 1906
6. 16 USC 470 et seq. - Archaeological Resources Protection Act of .1979 (ARPA)

7. 16 USC 470 et seq. - National Historic Preservation Act of 1966 (NIIPA)
8. 16 I,ISC 661 et seq. - Fish and Wildlife Coordination Act
9. 16 USC 668 et seq. - Bald and Golden Eagle Protection Act
10. 16 USC 703 et seq. - Migratory Bird Treaty Act
11. 16 USC 1531 et seq_ - Endangered Species Act of 1973
12. 33 USC 1251, et seq. - Clean Water Act
13. 33 USC 1321 - Oil and Hazardous Substances Liability (Clean Water Act, Section 311)
14. 42 USC Sec. 300f et seq. - Safe Drinking Water Act, and 42 USC 201 - Safe Drinking Water Act Amendments of 1996
15. 42 USC 6901 et seq. - Resource Conservation and Recovery Act (RCRA)
16. 42 USC 7401 et seq. - Clean Air Act & Amendments
17. 42 USC 9602 - CERCLA, Title 1, Section 102 - Reportable Quantities and Additional Designations
18. 42 USC 9603 - CERCLA, Title 1, Section 103 - Notices, Penalties
19. 42 USC 11000-11050 , Emergency Planning and Community Right-to-Know Act of 1986 (EPCRA)
20. 42 USC 13101-13109 - Pollution Prevention Act of 1990

C. EXECUTIVE ORDER (EO)

1. EO 11593 Protection and Enhancement of Cultural Environment 1971
2. EO 11738 Providing for Administration of the Clean Air Act and the Federal Water Pollution Control Act with Respect to Federal Contracts, Grants or Loans
3. EO 11988 Floodplain Management
4. EO 11990 Protection of Wetlands
5. EO 12114 Environmental Effects Abroad of Major Federal Actions
6. EO 12843 Procurement Requirements and Policies for Federal Agencies for Ozone-Depleting Substances
7. EO 12856 Federal Compliance with Right-to-Know Laws and Pollution Prevention Requirements
8. EO 12898 Federal Actions to Address Environmental Solstice in Minority Populations and Low Income Populations
9. EO 13112 Invasive Species 1999
10. EO 13423 Strengthening Federal Environmental, Energy, and Transportation Management
11. EO 13186 Responsibilities of Federal Agencies to Protect Migratory Birds

D. OTHER FEDERAL STANDARDS

1. EPA Air Quality Standards

E. DEPARTMENT OF ENERGY

1. DOE P 456.1 Secretarial Policy Statement on Nanoscale Safety (dated 09/15105)
2. DOE 414.1C Quality Assurance.

3. CRD – Contractor Required Documents as incorporated in DOE Orders made applicable under Prime Contract No. DE-AC36-08GO28308.

F. CODE OF COLORADO REGULATIONS (CCR)

1. 2 CCR 402-2 Water Well Construction
2. 2 CCR 402-4 Rules for Small Capacity Well Permits in Designated Ground Water Basins
3. 2 CCR 406-8 Chapter 10, Article 2 and 3 Non-Game Wildlife
4. 5 CCR 10011-20 Colorado Department of Public Health & Environment, Air Quality Control Commission Regulations
5. 5 CCR. 1001-10 Regulation No 8 - Control of Hazardous Air Pollutants
6. 5 CCR 1001-19 Control of Emission of Ozone Depleting Compounds
7. 5 CC.R. 1002-31 Basic Standards and Methodologies for Surface Water
8. 5 CCR 100241 The Basic Standards for Groundwater
9. 5 CCR 1002-42 Site-Specific Water Quality Classifications and Standards for Ground Water (Rocky Flats Area)
10. 5 CCR 1002-61 Colorado Discharge Permit System Regulations
11. 5 CCR 1002-62 Regulations for Effluent Limits
12. 5 CCR 1002-63 Pretreatment Regulations
13. 5 CCR 1002-65 Regulations Controlling Discharges to Storm Sewers
14. 5 CCR 1003 -1 Primary Drinking Water Regulations
15. 5 CCR 1003-6 Guidelines on Individual Sewage Disposal Systems
16. 6 CCR 1007-1 Part 1 - General Provisions
17. 6 CCR 1007-1 Part 2 - Registration of Radiation Producing Machines
18. 6 CCR 1007-1 Part 3, Sections 1-7 - Exempt and General License Material
19. 6 CCR 1007-1 Part 4 - Standards for Protection Against Radiation
20. 6 CCR 1007-1 Part 8 - Radiation Safety Requirements for Analytical X-Ray Equipment
21. 6 CCR 1007-1 Part 10 - Notices, Instructions, and Reports to Workers; Inspections
22. 6 CCR 1007-1 Part 17 - Transportation of Radioactive Material
23. 6 CCR 1007-3 Colorado fla7ardous Waste Regulations
24. 7 CCR 1101-14 Underground Storage Tanks and Aboveground Storage Tanks
25. 8 CCR 1507-1 Colorado Operation of Commercial Vehicles and Transportation of Hazardous Materials
26. 8 CCR 1507-7 Colorado Hazardous Materials Route Designation
27. 8 CCR 1507-8 Colorado Hazardous Materials Transportation Reporting
28. 8 CCR 1507-9 Colorado Transporting and Shipping of Hazardous Materials
29. Rules and Regulations Pertaining to the Administration and Enforcement of the Colorado Weed Management Act (Colorado State Weed List - No citation available yet.)

30. State of Colorado Noise Statue, CCR 25-12-101 to 109.

G. COLORADO REVISED STATUTES (CRS)

1. 8 CRS 20.5 Parts 1-3 - Petroleum Storage Tanks
2. 25 CRS 7 Air Quality Control
3. 25 CRS 8 Colorado Water Quality Control Act
4. 25 CRS 10 Individual Sewage Disposal Systems Act
5. 25 CRS 15, Part 1, Part 3 - State Hazardous Waste Management Program
6. 25 CRS15 Part 1, Part 4 - Infectious Waste
7. 29 CRS 22 Hazardous Substances Incidents
8. 33 CRS 2 Nongame and Endangered Species Conservation
9. 33 CRS 6 Law Enforcement and Penalties
10. 35 CRS 5 Pest Control Districts
11. 35 CRS 5.5 Colorado Weed Management Act
12. 35 CRS 9 Pesticide Act
13. 35 CRS 10 Pesticide Applicators Act
14. 37 CRS 90- 101, et seq. - Colorado Ground Water Management Act

H. AMERICAN CONFERENCE OF GOVERNMENTAL INDUSTRIAL HYGIENISTS (ACGIH)

1. ACGIII Threshold Limit Values for Chemical Substances and Physical Agents (Latest Edition)

I. AMERICAN NATIONAL STANDARDS INSTITUTE (ANSI)

1. ANSI Z126.1 Safe Use of Lasers (Latest Version)
2. ANSI Z88.2 American National Standard for Respiratory Protection
3. ANSI Z49.1:2005Safety in Welding, Cutting and Allied Processes

J. NATIONAL INSTITUTE OF HEALTH (N-11-1)

1. NM - Guidelines for Research Involving Recombinant DNA Molecules (Latest Edition) Excluding
2. Section IV-B-2-a (3): Annual reporting to N11-1 including the roster of Institutional Biosafety Committee (IBC).
3. Section W-B-2-a (6): Open IBC meetings to the public, when possible.
4. Section TV-13-2-a (7): All IBC meeting minutes will be made available to the public for review and comment. Public comments and the Track response is to he forwarded to NTH.

K. OTHER LOCAL STANDARDS

1. Consolidated Mutual Water Company Rules
2. Jefferson County Dept. of Health and Environment, Individual Sewage Disposal Sys. Reg.
3. Metro Wastewater Reclamation District Rules and Regulations
4. Pleasant View Water and Sanitation District Rules and Regulations
5. West Metro Fire Rescue Amendments to the international Fire Code

6. Jefferson County Zoning Regulations – Section 11 Lighting

END OF SECTION 00840

SECTION 111

FACILITY PERFORMANCE

PERFORMANCE

A. Basic Function:

1. Provide built elements and site modifications as required to fulfill needs described in the project program. The Performance Specifications in Section 6 are intended to extend and complement the information in the project program by describing acceptable levels of facility performance, quality of materials and systems, and the means of demonstrating compliance (substantiation). The chapters define the basic elements of the facility using CSI's Uniformat organizational structure, and each chapter is broken down into sub-chapters to further define detail of elements described in general terms in the broad-scope chapters. Substantiation requirements are sometimes defined in the broad-scope chapters and sometimes in the sub-chapters, but it is intended to not repeat substantiation requirements in more than one location. Section 7 ("Substantiation Spreadsheet") is a summary of all substantiation requirements after award of contract. Refer to Section 4 for substantiation requirements to be included with the proposal.

2. The complete project comprises the following elements:
   a. Substructure (A): Elements below grade and in contact with the ground.
   b. Shell (B): The superstructure, exterior enclosure, and the roofing.
   c. Interiors (C): Interior construction, stairs, finishes, and fixtures, except fixtures associated with services and specialized equipment.
   d. Services (D): Mechanized, artificial, automatic, and unattended means of supply, distribution, transport, removal, disposal, protection, control, and communication.
   e. Equipment and Furnishings (E): Fixed and movable elements operated or used by occupants in the functioning of the project.
   f. Sitework (G): Modifications to the site, site improvements, and utilities.

3. Code: All portions of the project will comply with the code. The code referred to herein consists of all applicable local, State, and federal regulations as referenced in Section 00840.
   a. Occupancy: The project is a mixed occupancy, according to the code, which may include Group B (Business), H (High-Hazard), I (Institutional), and U (Utility and Miscellaneous) occupancies.

4. Environmentally Responsible Design: In addition to other requirements, the design and construction will minimize adverse effects on the exterior environment, will enhance the quality of the indoor environment, and will minimize consumption of energy, water, construction materials, and other resources.
   a. Achieve at least a Gold rating in accordance with U.S. Green Buildings Council LEED-NC Green Building Rating System (including not less than a 30% energy savings below ASHRAE 90.1-2007 for all portions of the building, except the HPCDC). Selection of specific credits to achieve is the responsibility of the Subcontractor unless otherwise indicated. The project will comply with criteria specified in current Rating System documentation as well as related criteria specified in other Sections. The project has been registered with the USGBC under LEED NC2.2. Should it be deemed advantageous in collection of credits, especially if achieving Platinum rating is more easily facilitated, the Subcontractor is encouraged to convert to LEED v3 (2009) rating system. Refer to "LEED Analysis" for "required", "desirable", and "if possible" credits.
   b. Specific additional goals include:
      1) No mechanical cooling for High Performance Computing Data Center (HPCDC) - required (see section D99).
      2) No mechanical cooling for the office areas or labs unless needed for process loads - desirable
      3) Achieve a PUE (Power Usage Effectiveness) of 1.06 or less and an EUE or 0.9 or less for the HPCDC (see section D99). Desirable: Achieve an EUE of 0.6 or less.

4) The office area shall have a maximum annual energy usage of 25 KBTU/s.f./year, including plug loads.
5) Provide not less than a 100kW photo voltaic collection system on the roof.

c. Substantiation:
1) Preliminary Design Stage: LEED Checklist annotated to show specific credits to be achieved with brief description of how they will be achieved.
a) Submit a "Sustainability Design Report" to include annual energy consumption calculations for the base-case building and the proposed case building. Provide Life Cycle Cost (LCC) analysis used to compare the total life-cycle value of various building systems based on initial cost, annual maintenance and operation costs. The LCC analysis shall use energy costs obtained from the most current four successive quarters for the site. Submit energy model summary of the various building system options in the Sustainability Design Report. Refer to NREL Design Guidelines, Section 010000 for specific requirements for the sustainable design report. Refer to Section 9 - NREL Provided Information, for additional information on office energy goal calculations.
b) Provide an updated narrative and calculations describing how the Design Builder proposes to achieve PUE and EUE goals.
c) Provide ASHRAE 140 compliant energy model using TMY3 weather file for Golden, Colorado. For the purposes of this preliminary analysis, the IT equipment energy shall be 1.0 MW operating 8760 hours per year.
3) Design Development and Construction Documents Stages:
a) LEED Checklist annotated to show specific credits status of design related to specific credits to be achieved.
b) Comprehensive checklist of certification documentation specified in LEED Reference Guide, annotated to show which forms of documentation have been submitted.
c) The documentation specified in LEED Reference Guide that is relevant to the degree of completion of the design; at subsequent design stages it will not be necessary to repeat submissions of the same documentation unless the design has changed.
4) At Completion: LEED Certification, by U.S. Green Buildings Council.
a) Subcontractor will submit application and pay applicable fees.
b) Subcontractor will provide all certification documentation and install certification plaque.
c) Subcontractor will provide NREL a complete duplicate of certification documentation.

5. In addition to the requirements of this section, the construction will comply with requirements of project program.

6. Xcel Energy Rebate Programs: Provide the necessary equipment and submit all required documentation to Xcel Energy as part of Xcel's demand side management rebate program. This includes, but is not limited to, premium efficiency motors, VFD's, cooling towers, and other equipment that qualifies. Rebates shall be direct to NREL.

B. Amenity and Comfort:

1. Thermal Performance: Design and construct to provide comfortable interior environment in accordance with ASHRAE 55-2004, for a CLO value of 1.0 and with occupant metabolic rates of 1.0 and 1.3 met and with the following:
a. Outside Air Design Conditions:
1) Summer Outside Air Design Temperature: 1 percent cooling design condition listed in the ASHRAE Fundamentals Handbook.
2) Winter Outside Air Design Temperature: 99.6 percent heating design condition listed in the ASHRAE Fundamentals Handbook.

C. Health and Safety:

1. Fire Resistance: The construction will provide Type I-A construction in accordance with ICC International Code.

2. Prevention of Accidental Injury: As required by code and as follows:
   a. Safety Glazing: As defined by 16 CFR 1201; in locations required by code, glazed areas subject to human impact, glazed areas at grade, and doors.
   b. Substantiation:
      1) Construction Documents: For load-resisting elements, structural design calculations and drawings sealed by licensed structural engineer.

3. Lightning Hazard: Prevent damage to occupants, structure, services, and contents due to lightning strikes.
   a. Provide protection equivalent to that specified in NFPA 780.
   b. Ground Resistance Measurement Methods: As described in NFPA 780, Appendix I, or IEEE 81-1983.
   c. Substantiation:
      1) Design Development: If methods prescribed by NFPA 780 are not used, description of engineering basis of design, including grounding terminal design.
      2) Design Development: If grounding in very shallow or dry soil, or in rock, is required, ground resistance measurements and engineering analysis of ground terminal design.
      3) Design Development: Diagrams showing locations of strike (air) terminals and zones of protection; identification of internal components that require bonding to equalize potential.
      4) Construction Documents: Engineering analysis of equalization of potential to metal bodies within the structure.
      5) Construction Documents: Drawings showing locations and sizes of conductors, bonding of metal bodies, and components; detailed installation specifications.
      6) Commissioning: Continuity tests for grounding conductors, equipotential bonding of other systems, and ground terminals; ground resistance test for each ground terminal, or equivalent taking into account related grounding systems.
      7) Commissioning: Certification of system complying with UL Master Label or Lightning Protection Institute Certified System requirements.
      8) Closeout: Maintenance and inspection procedures.
      9) Closeout: Project record data; location of ground terminals, ground resistance and soil conditions at time of test.

4. Health Hazards:
   a. Prevent growth of fungus, mold, and bacteria on surfaces and in concealed spaces.
   b. Hazardous Construction Materials: The construction will comply with the requirements of the code and the following:
      1) No asbestos containing materials are allowed and at completion of construction, Design Builder to provide certification that no materials were incorporated into the project.
   c. Indoor Air Quality: Comply with the code and the following:
      1) Acceptable air quality as defined by ANSI/ASHRAE 62.1-2004.
      2) Substantiation:
         a) Preliminary Design: Identification of methods to be used to comply with requirements; ventilation design calculations. Identification of unusual indoor contaminants or sources and methods to mitigate their effects on occupants.
         b) Construction Documents: Specifications showing that construction materials are not contaminant sources and do not adversely affect air quality. Provide all documentation required by ANSI/ASHRAE 62.1-2004.
         c) Commissioning: Field measured outside and supply air quantities for each space and its associated air handler. Provide all testing and documentation required by

ANSI/ASHRAE 62.1-2004.

d) Occupancy: Field testing to show compliance, after full occupancy.

d. Wind Study: In order to prevent dangerous or obnoxious odors or fumes from other facilities entering fresh air intakes of this facility, re-entrainment of this facilities emissions back into it's fresh air intakes, and to prevent emissions from this facility which might affect other nearby buildings on the campus or nearby neighborhoods, the Subcontractor is responsible for performing a wind analysis during schematic design phase once the proposed building massing is complete. Previous campus wind tunnel analysis has been performed via physical massing, by CCP Inc. Contractor is free to choose whatever entity it prefers to perform the study, including alternate means such as 3D fluid dynamics computer modeling.
1)Substantiation: Provide wind study during the preliminary design phase.

5. Physical Security: In addition to any provisions that may be required by law or code, both exterior and interior spaces will be designed and constructed to incorporate accepted principles of crime prevention through environmental design (CPTED), using natural (as opposed to technological) methods of providing surveillance, access control, and territorial reinforcement wherever possible.
   a. Definition of Elements at Ground Level: For purposes of physical security, any element within 20 feet (6 m) of the ground, grade, or adjacent paving.
   b. Security Zones:
      1) Public Access Zone: That area to which the public has free access, including public corridors, grounds, and parking lots.
      2) Reception Zone: The area to which the general public has access but beyond which access is restricted at all times.
      3) Operations Zone: The area to which only employees and visitors with a legitimate reason to be there have access.
      4) Secure Zone: The area to which access is always controlled and which is monitored continuously.
      5) High-Security Zone: Areas indicated in project program and areas named data processing.

6. Electrically-Operated Equipment and Appliances: UL listed and NRTL research equipment or approved nationally recognized testing laboratory for application or purpose to which they are put; suitable for wet locations listing for exterior use.

7. Noise:

   a, Equipment noise such as ventilation exhaust stacks are to meet State of Colorado Noise Statute requirements (CCR 25-12) which establishes standards for noise level limits based on time of day and type of area.

   b. Construction noise to meet State of Colorado Noise Statue requirements (CCR 25-12).

   c. Substantiation:

      1 Noise measurements as needed during construction phase commissioning to demonstrate equipment noise meets criteria of statute..

      2 Noise measurements during commissioning to demonstrate noise of operating equipment meets criteria of statute.

D. Structure:

1. The structure type of the building, as well as structural materials used, shall be fully compatible with the architectural concept, and shall meet all current applicable codes. The following general conceptual requirements for structural design shall be provided at a minimum; if more stringent requirements are necessary to meet the overall project requirements, they shall be used.
   a. The structural materials may be steel, concrete, or a composite of them that is serviceable and durable as well as suitable for the intended purpose. Although the primary and secondary

structure is anticipated to be concrete, the incorporation of standard steel members or steel decks is acceptable, if in compliance with other requirements. Any structural materials planned to be visible on the building exterior or interior must be compatible in color, texture, and proportions with the required architectural building concept as well as act in harmony with other building materials.

b. Dead loads defined by the current local governing building codes shall be the minimum dead loads requirements for design, unless the actual loads are greater, in which case the most stringent load or combination of loads shall be used for design.

c. Live load criteria: Minimum live loads are given in the local building code. The table below shows minimum live loads for categories of use often not listed in the code. These loads supplement the code requirement and the most stringent requirement shall govern in the case of a conflict. In addition, this table shows a 80-psf load for office areas to permit future relocation of corridors to any place on a floor. This increase is not intended for a safety factor. The design shall anticipate other loadings which may be imposed on the building.

1)	All office areas	80 psf
2)	Automated filing areas and library areas	150 psf
3)	Uninterruptible power supply (UPS) rooms	50 psf
4)	Battery rooms	150 psf
5)	Backup power generator rooms	50 psf
6)	Mainframe computer centers	150 psf
7)	Communication frame rooms	150 psf
8)	Pedestrian (only) walkways and bridges	100 psf
9)	Storage areas (Minimum size of 300 SF)	100 psf
10)	Roof Testing Areas	80 psf

Equipment loading in the highbay laboratoryto be confirmed during design phase; for the purpose of RFP response, assume 250 psf (heavy manufacturing load per IBC 2006).

d. Live load reduction: Live load reductions are not permitted for horizontal framing members and for columns and load-bearing walls supporting the top floor and roof of the building. Live load reductions are permitted on all other members, in accordance with the local building code.

e. Floor deflection criteria: design shall keep vibrations due to occupant induced impact outside of a perceptible range per AISC Design Guide 11 "Floor Vibration Due To Human Activity". Vibration transmission through the structure shall be minimized; sources of vibration shall be isolated. Special considerations will be made for those areas requiring enhanced vibration control. Vibration design criteria shall at a minimum follow AISC vibration criteria for steel structures. For laboratories, limit center bay velocity to 2000 micro inches/second due to building resonances and footfall-induced vibration including slow (50 steps/minute) walking speed within labs and fast (100 steps/minute) walking speeds in adjacent corridors. Mechanical rooms shall be designed to limit mechanical live load deflections to ¼" maximum. Mechanical equipment shall be isolated from the structure.

f. Earthquake Loads: The construction will accommodate loads as prescribed by code.

g. For the Outdoor Test Beds, assuming the slab is on grade loads will the transferred directly to the supporting soil. A 1 inch PVR is acceptable.

2. Substantiation:
   a. Preliminary Design: Detailed listing of design criteria and preliminary analysis, prepared by a licensed structural engineer.
   b. Construction Documents: Detailed design analysis by licensed structural engineer.

E. Durability:

1. Expected Service Life Span: Anticipated functional service life of the built portions of this project is 50 years.
   a. Service life spans of individual elements that differ from the overall project life span are defined in other Sections.

b. Additional requirements for elements not required to have life span equal to that of the project as a whole are specified below under "Operation and Maintenance."
c. Substantiation: Since actual service life cannot be proven, substantiation of actual service life is not required; however, the following are reasonable indicators of anticipatable service life:
   1) Preliminary Design or Design Development: Service life expectancy analysis, for each element for which life span is specified; including:
      a) Length of effective service life and aesthetic service life if specified, with action required at end; e.g. complete replacement and partial replacement.
      b) Conditions under which estimate will be valid; e.g. expected uses, inspection frequency, maintenance frequency, etc.
   2) Design Development: Replacement cost, in today's dollars, for each major element that has a service life expectancy less than that of the project; include both material and labor cost, but not overhead or profit; base costs on installing in existing building, not as a new installation.
   3) Design Development: Life cycle cost of project, over the specified project service life, excluding operating staff costs; include costs of:
      a) Replacement of each element not expected to last the life of the project; identify the frequency of replacement.
      b) Deduct salvage value of replaced elements.
      c) Calculate costs in today's dollars, disregarding the time value of money, inflation, taxes, and insurance.

F. Operation and Maintenance:

1. Space Efficiency: Minimize floor area required while providing specified spaces and space relationships, plus circulation and services areas required for functions.

2. Energy Efficiency: The construction will minimize energy consumption while providing function, amenity, and comfort specified.
   a. The construction will be designed to provide energy efficient design using procedures and values specified in ASHRAE 90.1-2007.
      1) Excluding the energy consumption for the High Performance Computing Data Center, provide at least 30 percent less energy consumption than that of an equivalent minimally-complying baseline building, demonstrated by comparing the actual Design Energy Cost to the Energy Cost Budget of a prototype building, both calculated in accordance with ASHRAE 90.1-2007.
   b. Substantiation:
      1) Preliminary Design: Detailed listing of design criteria and design analysis showing compliance, prepared by a licensed mechanical engineer.
      2) Preliminary Design: Energy cost of all energy-consuming equipment and systems over the first year of operation; include analysis of probable change in annual cost over time due to aging but disregarding inflation and rate changes.
      3) Construction Documents: Detailed listing of design criteria and design analysis showing compliance, prepared by a licensed mechanical engineer.
      4) Construction Documents: Updated energy cost of all energy-consuming equipment and systems over the first year of operation; include analysis of probable change in annual cost over time due to aging but disregarding inflation and rate changes.

3. Water Consumption: Minimize water consumption to meet LEED goals indicated.
   a. Substantiation:
      1) Preliminary Design: Quantity of water that will be used in the first year of operation, divided into domestic water, HVAC water, and other water categories, with required storage capacity and quantity of water recycled, if any; include basis of calculations.
      2) Construction Documents: Updated water consumption, based on actual equipment

selections and sizes.

4. Waste (Trash/Rubbish) Removal: As described in the project program and as follows:
   a. See Section E11 for requirements for solid waste disposal.

5. Ease of Operation: Provide facility, equipment, and systems that are easily operated by personnel with a reasonable level of training for similar activities.
   a. Minimize the need for specialized training in operation of specific equipment or systems; identify all equipment and systems for which the manufacturer recommends or provides training programs.
   b. Substantiation:
      1) Preliminary Design: Operating impact analysis, including identification of type and quantity of staff, tools, and supplies required; estimate of impact that aging materials will have on operating requirements; no cost calculations required; identify source of data.
      2) Construction Documents: Updated operating impact analysis, based on actual product selections.

6. Ease of Maintenance: The construction will minimize the amount of maintenance required, and when maintenance is required, provide safe access by NREL's maintenance personnel.
   a. Substantiation:
      1) Preliminary Design: Maintenance impact analysis, including identification of maintenance effort (type of staff, time required, and frequency), tools, and supplies required, over expected functional and aesthetic service life of project; including preventive maintenance, replacement of parts, and cleaning, but not energy for operation or replacement at end of service life; no cost calculations required; identify source of data.
      2) Construction Documents: Updated maintenance impact analysis, based on final product selections.

7. Ease of Repair: Elements that do not meet the specified requirements for ease of repair will be used only if they meet the specified requirements for ease of replacement of elements not required to have service life span equal to that specified for the project as a whole; the service life expectancy analysis and life cycle cost substantiation specified for service life are provided; and NREL' acceptance has been granted.

8. Ease of Replacement:
   a. Elements Not Required to have the Expected Service Life Span Equal to that Specified for the Project as a Whole: The construction will make provisions for replacement without undue disruption of building operation.

ELEMENTS AND PRODUCTS

A. In addition to requirements specified in other Sections, provide products and elements that comply with the following.

B. Where "no substitutions" is indicated, use only the product (or one of the products) specified.

C. Elements Made Up of More Than One Product:

1. Where an element is specified by performance criteria, the project will use construction either proven-in-use or proven-by-mock-up, unless otherwise indicated.
   a. Proven-In-Use: Proven to comply by having actually been built to the same or very similar design with the same materials as specified and functioning as specified.
   b. Proven-by-Mock-Up: Compliance reasonably predictable by having been tested in full-scale mock-up using the same materials and design as specified and functioning as specified. Testing need not have been accomplished specifically for this project; when published listings of independent agencies include details of testing and results, citation of test by listing number is sufficient (submittal of all test details is not required).

c. The Subcontractor may choose whether to use elements proven-in-use or proven-by-mock-up, unless either option is indicated as specifically required.
d. Where test methods accompany performance requirements, those test methods will be used to test the mock-up.

2. Where a type of product is specified, without performance criteria specifically applicable to the element, the project will use the type of product specified.

3. Where more than one type of product is specified, without performance criteria specifically applicable to the element, the construction will use one of the types of products specified.

4. Where a type of product is specified, with applicable performance criteria, the construction will use either the type of product specified or another type of product that meets the performance criteria as proven-in-use or proven-by-mock-up.

5. Where more than one type of product is specified, with applicable performance criteria, the construction will use either one of the types of products specified or another type of product that meets the performance criteria as proven-in-use or proven-by-mock-up.

6. Where neither types of products nor performance criteria are specified, the construction will use products that will perform well within the specified life span of the building.

D. Products:

1. Where a product is specified only by a manufacturer name and model number/brand name, the construction will use only that model/brand product.

2. Where the properties of a product are specified by description and/or with performance criteria, the construction will use products that comply with the description and/or performance criteria.

3. Where manufacturers are listed for a particular product, the construction will use a product made by one of those manufacturers that also complies with other requirements.

SUBSTANTIATION

A. Definition: Substantiation is any form of evidence that is used to predict whether the design will comply with the requirements or to verify that the construction based on the design actually does comply. During Preliminary Design, Design Development, and Construction Documents, requirements to submit substantiation are primarily intended to forestall use of designs or constructions that will not comply. At any time before completion of construction, substantiation is presumed to be only a prediction and may subsequently be invalidated by actual results.

1. Regardless of whether substantiation is specified or not, the actual construction will comply with the specified requirements and may, at NREL's discretion, be examined, inspected, or tested to determine compliance.

2. Substantiation submittals will not be approved or accepted, except to the extent that they are part of documents required to be approved or accepted in order to proceed to the next stage of design or construction. However, approval or acceptance of substantiation will not constitute approval or acceptance of deviations from the specified requirements unless those deviations are specifically identified as such on the submittal.

3. NREL accepts the responsibility to review substantiation submittals in a timely manner and to respond if they are unacceptable.

B. In addition to the requirements stated in other Sections, Design Builder will provide the following substantiation of compliance at each stage of the project:

1. If a substantiation requirement is specified without an indication of when it is to be submitted, Design Builder will submit or execute it before the end of Construction Documents.

C. Previous Construction: Where elements proven-in-use are used to comply with performance requirements:

1. During Design Development, Design Builder will utilize proven-in-use elements proposed for use, including building name, location, date of construction, NREL contact, and description of design and materials in sufficient detail to enable reproduction in this project.

D. Mock-Up Testing: Where elements proven-by-mock-up are used to comply with performance requirements:

1. During Design Development, Design Builder will identify proven-by-mock-up elements proposed for use, with test report including date and location of test, name of testing agency, and description of test and mock-up.

3. Mock-up testing may not have been performed specifically for this project, but the mock-up will be very similar in design and construction to the element proposed.

E. Design Analyses (including Engineering Calculations):

1. Where a design analysis or calculation is specified without identifying a particular method, analysis will be performed in accordance with accepted engineering or scientific principles to show compliance with specified requirements, with report that includes analysis methods used and the name and qualifications of the designer.

2. Where engineering design is allowed to be completed after commencement of construction, substantiation may be in the form of shop drawings or other data.

3. Design analyses will be submitted at the end of Design Development unless otherwise indicated.

4. Where design analysis is specified to be performed by licensed design professional, Design Builder will use a design professional licensed in the State in which the Project is located.

F. Products:

1. Where actual brand name products are not identified by either NREL or the Subcontractor, Design Builder will identify the products to be used.

2. During Preliminary Design or Design Development:
   a. Where more than one product type is identified for a particular system, assembly, or element, Design Builder will identify exactly which type will be used.
   b. For each product type, Design Builder will provide descriptive or performance specifications; early submittals will be brief specifications, but complete specifications Design Builder will provide prior to completion of construction documents.
   c. For each product type, Design Builder will identify at least one manufacturer that will be used.
   d. For major manufactured products that are commonly purchased by brand name, and any other products so indicated, Design Builder will provide manufacturer's product literature on at least one actual brand name product that meets the specifications, including performance data and sample warranty.

3. During Construction:
   a. Design Builder will identify actual brand name products used for every product, except commodity products specified by performance or description.
   b. Where a product is specified by performance requirements with test methods, and if so specified, Design Builder will provide test reports showing compliance.
   c. Design Builder will provide manufacturer's product literature for each brand name product.
   d. Design Builder will provide the manufacturer's certification that the product used on the project complies with the contract documents.

4. Before End of Closeout:
   a. Design Builder will provide copies of all manufacturer warranties that extend for more than one year after completion.

b. Also provide all submittals and operations and maintenance manuals.

END OF SECTION 111

SECTION A
SUBSTRUCTURE

PERFORMANCE

A. Basic Function:

1. Provide substructure as required to support the completed and occupied building safely and without uncontrolled subsidence or other movement.

2. Substructure comprises the following elements:
   a. Foundations (A1): Structures responsible for transferring dead loads, live loads, and environmental loads of completed building to the earth in such a way that the building is supported evenly and without movement.
   b. Basements (A2): Space-enclosing elements below grade, including necessary excavation, structural walls and floor, and other elements of enclosure such as waterproofing and thermal insulation.

3. Where substructure is integral with elements defined within another element group, meet requirements of both element groups.

4. In addition to the requirements of this section, the construction will comply with all applicable requirements of Section 111 - Facility Performance.

B. Amenity and Comfort:

1. Thermal Performance: Provide thermal resistance as necessary to maintain interior comfort levels specified and in accordance with code and the following:
   a. Energy Efficiency: As specified in Section 111 - Facility Performance.
   b. Average Thermal Transmittance: U-value of 0.10 IP (0.57 SI), maximum, for portions of substructure in contact with earth and enclosing conditioned space.
   c. Condensation: None on interior surfaces under normal interior temperature and relative humidity conditions, during 97-1/2 percent of the days in the coldest 3 months of the year.
   d. Minimum thermal performance values for individual substructure elements are also specified in other Sections.
   e. Substantiation:
      1) Preliminary Design: Identification of major thermal resistant materials and systems.
      2) Design Development: Detailed listing of design criteria and design analysis, prepared by licensed mechanical engineer.
      3) Construction Documents: Product data on thermal materials and details of continuous thermal barrier.

2. Water Penetration: Prevent ground water penetration into the interior of the building, under any circumstances.
   a. Substantiation:
      1) Preliminary Design: Identification of major water resistant assemblies and drainage features.

3. Water Accumulation: Prevent accumulation of water in crawl spaces or open areas adjacent to substructure.
   a. Substantiation:
      1) Preliminary Design: Identification of dewatering methods to be used.
      2) Construction Documents: Details of proven-in-use or proven-by-mock-up design.

C. Health and Safety:

1. Fire Resistance: Provide fire resistance in accordance with the most stringent applicable codes.
   a. For all elements required to have a fire resistive rating and which are not made of materials and

systems specified as acceptable by the code, use proven-by-mock-up construction.

b. For proven-by-mock-up construction, acceptable testing agencies are Underwriters Laboratories Inc.

c. Minimum performance values for individual substructure elements are also specified in other Sections.

d. Substantiation:

1) Design Development: Identification of assemblies required to have fire resistance rating and method to be used to achieve rating.

2) Construction Documents: Identifying numbers on the construction drawings.

2. Substance Exclusion: Prevent accumulation of harmful chemicals and gases such as radon and methane in spaces below substructure and subsequent penetration into occupied spaces.

a. Substantiation:

1) Preliminary Design: Identification of major radon resistant assemblies, chemical resistant assemblies, and ventilation features.

2) Construction Documents: Details of proven-in-use or proven-by-mock-up design.

3) Occupancy: Field testing to verify the absence of significant levels of harmful gases and chemicals after minimum of 6 months' occupancy.

D. Structure:

1. Capacity: Provide load bearing substructure members as required by code and designed to distribute dead loads, live loads, and environmental loads so that bearing capacity of soil is not exceeded.

a. Extend bearing portions of substructure to levels below frost line at project location; not less than 4 ft (1.2 m) below grade.

2. Dead Loads: Accommodate loads from weights of building materials, construction itself, and all fixed service equipment.

3. Live Loads: Accommodate loads from use and occupancy of the building, either uniformly distributed loads as prescribed by code or concentrated loads, whichever are more demanding structurally.

4. Environmental Loads: Accommodate loads from all environmental forces in accordance with code.

5. Substantiation:

a. Preliminary Design: Soil investigation report, detailed listing of design criteria, and preliminary analysis, prepared by a licensed structural engineer.

b. Construction Documents: Detailed design analysis by licensed structural engineer.

E. Durability:

1. Corrosion Prevention: Provide supplementary protection for underground metal elements, sufficient to prevent corrosion completely for the service life of the element without maintenance.

a. 3 inches (150 mm) of concrete cover is considered to be permanent protection.

b. Provide cathodic protection if any of the following is true; coatings or wrappings will not be considered sufficient protection for elements falling under these criteria:

1) Metal elements are buried in a soil environment known to cause corrosion on similar nearby structures.

2) Metal elements are buried in a soil environment in which stray DC electrical currents are present.

c. See Section D9 for requirements for cathodic protection.

F. Operation and Maintenance:

1. Provide substructure elements that will endure for the lifetime of the building with no maintenance.

PRODUCTS

A. Use one of the following:

1. Reinforced concrete.

B. The construction will not use any of the following:

1. Treated wood.

END OF SECTION A

SECTION A1
FOUNDATIONS

PERFORMANCE

A. Basic Function:

1. Provide foundations as required to support the completed and occupied building safely and without uncontrolled subsidence or other movement.

2. Foundations comprise the following elements:
   a. Standard Foundations (A11): Includes foundation walls not part of basements and pier caps.
   b. Deep Foundations (A12): Deep foundation systems, including drilled piers (caissons).
   c. Floors on Grade (A13): All elements necessary for slab foundations, including trenches, pits, and sumps, equipment bases, integral thermal insulation, and slab moisture protection.

3. Where foundations are integral with elements defined within another element group, meet requirements of both element groups.

4. In addition to the requirements of this section, comply with all applicable requirements of Section 111 - Facility Performance and Section A - Substructure.

5. Soils investigation information is available from NREL for adjacent buildings; however, foundations must be designed and constructed to comply with recommendations of a soils investigation report prepared by a licensed engineer retained by Subcontractor.

B. Amenity and Comfort:

1. Thermal Performance:
   a. Minimum thermal performance values for individual foundation elements are also specified in other Sections.

C. Structure:

1. Capacity: Provide load bearing foundation members as required by Section A - Substructure.

PRODUCTS

A. The construction will use one of the following:

1. Drilled piers as primary building support.

B. The construction will not use any of the following:

1. Wood foundation systems.

2. Masonry footings.

3. Spread and continuous footings.

4. Raft foundations.

METHODS OF CONSTRUCTION

A. The construction will not use any of the following methods and techniques:

1. Slab on grade construction if the soil movement cannot be controlled through soil preparation to a maximum movement of 1/2 inch.

END OF SECTION A1

SECTION A11
STANDARD FOUNDATIONS

PERFORMANCE

A. Basic Function:

1. Provide standard foundations as required to support the completed and occupied building safely and without uncontrolled subsidence or other movement.

2. Standard foundations comprise the following elements:
   a. Foundation walls not a part of basements.
   b. Caisson caps.
   c. Drilled concrete piers (refer to Section A12).

3. Where standard foundations are integral with elements defined within another element group, meet requirements of both element groups.

4. In addition to the requirements of this section, the construction will comply with all applicable requirements of Section 111 - Facility Performance, Section A - Substructure, and Section A1 - Foundations.

PRODUCTS

A. Do not use any of the following:

1. Wood foundation systems.

2. Masonry footings.

END OF SECTION A11

SECTION A12
DEEP FOUNDATIONS

PERFORMANCE

A. Basic Function:

1. The construction will provide deep foundations as required to support the completed and occupied building safely and without uncontrolled subsidence or other movement.
2. Where other foundations are integral with elements defined within another element group, the construction will meet requirements of both element groups.
3. In addition to the requirements of this section, the construction will comply with all applicable requirements of Section 111 - Facility Performance, Section A - Substructure, and Section A1 - Foundations.

PRODUCTS

A. Bored Piers:

1. The construction will use one of the following:
   a. Bored (and belled if recommended by soils investigation report) concrete piers.

B. Foundation Walls:

1. The construction will use one of the following:
   a. Reinforced concrete.

END OF SECTION A12

SECTION A13
FLOORS ON GRADE

PERFORMANCE

A. Basic Function:

1. Provide floors on grade as required to enclose habitable spaces and support interior functions without subsidence, structural cracking, or other uncontrolled movement.

2. Floors on grade comprise structural slabs that are installed over fill, including all depressions in the floor, such as trenches, pits, and sumps. Floors on grade also include equipment bases, under floor and perimeter drainage, thermal insulation at floor edge, and moisture barriers installed integrally with floor system.
   a. Floor Flatness (FF): Provide floors on grade engineered and constructed to achieve degree of flatness as follows, when measured in accordance with ASTM E 1155-1996(R01):
      1) Specified Overall Value (SOV): 35.
      2) Minimum Localized Value (MLV): 24.
   b. Floor Levelness (FL): Provide floors on grade engineered and constructed to achieve degree of levelness as follows, when measured in accordance with ASTM E 1155-1996(R01):
      1) Specified Overall Value (SOV): 25.
      2) Minimum Localized Value (MLV): 17.

3. Where floors on grade are integral with elements defined within another element group, meet requirements of both element groups.

4. In addition to the requirements of this section, comply with all applicable requirements of Section 111 - Facility Performance, Section A - Substructure, and Section A1 - Foundations.

B. Amenity and Comfort:

1. Thermal Performance: Provide thermal properties at edges of floors on grade as necessary to maintain interior comfort levels specified and in accordance with code.
   a. Thermal Insulation: Provide R-value of 10 IP (1.66 SI), minimum, for portions of floors on grade within 24 in (610 mm) of exposed building exterior.
   b. Vapor Retardation: Limit vapor transmission through floor construction to maximum rate of 0.1 perms (6 ng/Pa s sq m) at locations where impermeable applied interior finishes such as resilient flooring, wood flooring, or acrylic terrazzo are used.
      1) Use supplementary vapor retarder if necessary to meet requirements.
      2) Use method of sealing joints between vapor retarder elements that will be effective given available construction practices.
   c. Substantiation:
      1) Construction Documents: Product data on thermal materials and details of construction to achieve required thermal performance.

C. Health and Safety:

1. Radon Exclusion: Prevent accumulation of radon and subsequent penetration into building interior, in accordance with substance exclusion provisions of Section A - Substructure.
   a. Airtight floor construction.
   b. Impermeable seals at all service penetrations of floor construction.

D. Durability:

1. Floor Classifications: For concrete floors on grade, comply with composition and finishing recommendations of ACI 302.1R-2004 for floor classifications based on type of anticipated traffic and intended use.
   a. Class 1: Minimum 28-day compressive strength of 3000 psi (21 MPa); maximum slump of 5 in (125

mm); single troweling; nonslip finish where required by Volume C - Interiors.

2. Water-Cement Ratio: For concrete slabs on grade that are partly or completely exposed to freezing conditions, limit water cementitious materials ratio as recommended by ACI 302.1R-2004.
   a. Moderate to Severe Exposure: Maximum 0.50.

3. Air Content: For concrete slabs on grade that are partly or completely exposed to freezing conditions, provide air content in accordance with recommendations of ACI 201.2R-2001.

PRODUCTS

A. Use one of the following:

1. Concrete floor slabs throughout the project provided that earthwork preparation under the building can reduce PVR to less than 1/2 inch. Otherwise, provide structurally supported slabs with crawl spaces.

END OF SECTION A13

SECTION A2
BASEMENTS (LABRYRINTH)

PERFORMANCE

A. Basic Function:

1. The construction may include an underground "labryrinth" to support the hvac system to utilize ground temperatures to pre-heat and pre-cool air.

2. Basements comprise the following elements:
   a. Basement Excavation: Excavation, excavation supports that become a permanent part of substructure, backfill, and compaction of backfill for basement construction.
   b. Basement Walls: All elements of wall construction that occur below or partially below grade, including thermal insulation, waterproofing and dampproofing, and subdrainage.

3. Where basements are integral with elements defined within another element group, meet requirements of both element groups.

4. In addition to the requirements of this section, the construction will comply with all applicable requirements of Section 111 - Facility Performance and Section A - Substructure.

B. Amenity and Comfort:

1. Water Protection:
   a. Waterproofing: Provide permanent waterproofing at portions of basement that extend below water table and enclose habitable space. Acceptable method:
   b. Substantiation:
      1) Design Development: Subsurface investigation to identify location of water table and identification of basement areas requiring waterproofing systems.
      2) Construction Documents: Product data on water protection materials and systems; details of basement construction to achieve permanent water protection.

C. Health and Safety:

1. Radon Exclusion: Prevent accumulation of radon and subsequent penetration into basement spaces, in accordance with substance exclusion provisions of Section A - Substructure.
   a. Airtight basement construction.
   b. Impermeable seals at all service penetrations of basement enclosure.

D. Structure:

1. Capacity: Provide load-bearing basement elements as required by Section A - Substructure.
   a. Minimum Wall Thickness: Not less than nominal 8 in (200 mm).
   b. Minimum Wall Reinforcement: Steel with minimum yield strength not less than 60,000 psi (420 MPa).

E. Durability:

1. Corrosion Prevention: Provide not less than 3 in (75 mm) of cover for metal reinforcing at any locations potentially exposed to ground water or surface water.

PRODUCTS

A. Use one of the following:

1. Reinforced concrete.

END OF SECTION A2

SECTION B
SHELL

PERFORMANCE

A. Basic Function:

1. Provide permanently enclosed spaces for all functional areas shown in the project program, unless otherwise indicated. The construction will provide a physical enclosure that keeps out weather, unwelcome people, animals, and insects without requiring specific action by occupants, while providing convenient movement of occupants between inside and outside, desirable natural light, and views from inside to outside. Provide level floor areas, comfortable ceiling heights, and essentially vertical walls.

2. The elements forming usable enclosed space and separating that space from the external environment comprise the shell and consist of:
   a. Superstructure (B1): All elements forming floors and roofs above grade and within basements, and the elements required for their support, insulation, fireproofing, and firestopping.
   b. Exterior Enclosure (B2): All essentially vertical elements forming the separation between exterior and interior conditioned space, including exterior skin, components supporting weather barriers, and jointing and interfacing components; not including the interior skin unless an integral part of the enclosure.
   c. Roofing (B3): All elements forming weather and thermal barriers at horizontal and sloped roofs and decks, and roof fixtures.

3. Exterior Surfaces Exposed to View: Surfaces visible from street or ground level, plus surfaces visible from windows of same building and adjacent existing buildings.

4. Where shell elements also function as elements defined within another element group, meet requirements of both groups.

5. In addition to the requirements of this section, the construction will comply with all applicable requirements of Section 111 - Facility Performance.

B. Amenity and Comfort:

1. Thermal Performance: The construction will have thermal resistance as necessary to maintain interior comfort levels specified and in accordance with code and the following:
   a. Energy Efficiency: As specified in Section 111.
   b. Average Thermal Transmittance: U-value of 0.05, maximum, for wall elements and 0.025 for roof elements.
   c. Condensation: None on interior surfaces under normal interior temperature and relative humidity conditions, during 98 percent of the days in the coldest 3 months of the year.
   d. Components That Have Surfaces Facing Both Interior and Exterior Environment: Condensation Resistance Factor (CRF) as required to meet requirement above, when tested in accordance with AAMA 1503-1998.
   e. Minimum thermal performance values for individual shell elements are also specified in other Sections.
   f. Substantiation:
      1) Preliminary Design: Identification of major thermal resistant materials and systems.
      2) Design Development: Detailed listing of design criteria and design analysis, prepared by licensed mechanical engineer.
      3) Construction Documents: Product data on thermal materials and details of continuous thermal barrier.

2. Air Infiltration: Maximum of 0.06 cfm (0.0003 cu m/s) per square foot (square meter) of exterior surface area, measured in accordance with ASTM E 283-2004 at differential pressure of 6.24 psf (298 Pa).

a. Use supplementary air barrier if necessary to maintain performance over entire shell.
b. Use method of sealing joints between elements that will be effective given available construction practices.

3. Water Penetration: The construction will prevent water penetration into the interior of the building, under conditions of rain driven by 70 mph (112 km/h) wind.
   a. Substantiation:
      1) Preliminary Design: Identification of major water resistant assemblies.
      2) Design Development: Details of proven-in-use or proven-by-mock-up design.

4. Natural Light: The construction will provide fenestration in shell as required to meet requirements for natural light as specified in Section C and in accordance with code and the following:
   a. Exterior Glazing: Minimum 10 percent of total floor area for each habitable room; not required for bathrooms, toilet compartments, closets, halls, or storage and utility spaces.

5. Natural Ventilation: The construction will provide natural ventilation in accordance with code and the following:
   a. Minimum Ventilation Opening Area: 8 percent of total floor area for each habitable room; not required for bathrooms, toilet compartments, closets, halls, or storage and utility spaces.
   b. Substantiation:
      1) Design Development: Drawings showing natural ventilation location, ventilation opening areas, and floor areas being served.
      2) Construction Documents: Engineering design calculations and drawings prepared by licensed engineer.

6. Acoustical Performance: The shell will be constructed to limit sound transmission as follows:
   a. Ambient Sound Level: The construction will maintain ambient sound levels in perimeter spaces within Noise Criteria (NC) ranges specified in Section C - Interiors during normal hours of occupancy.
   b. Exterior Noise Level: The construction will maintain maximum average daytime and nighttime noise level from interior sound sources in accordance with local regulations, measured at the project property line.
   c. Vibration Control: The construction will use shell elements that will not resonate at frequencies that are characteristic of ambient exterior sound sources at the project site.
   d. Minimum performance values for individual shell elements are also specified in other Sections.
   e. Substantiation:
      1) Design Development: Acoustical analysis prepared by an acoustical engineer.

7. Cleanliness of Exterior Surfaces: The shell will be constructed to:
   a. Prevent attraction and adherence of dust and air-borne dirt and soot, and minimize appearance of settled dust and dirt.
   b. Be washed reasonably clean by normal precipitation.
   c. Prevent precipitation from washing settled dust and dirt over surfaces exposed to view.

8. Appearance: The construction will provide exterior appearance with characteristics as follows:
   a. Compatible with adjacent buildings on same campus.
   b. Concealing mechanical equipment, plumbing equipment, electrical equipment, and piping, conduit, and ducts from view from the street.
   c. Concealing rooftop mechanical equipment, plumbing equipment, electrical equipment, and piping, conduit, and ducts from view from the street, windows in the project that overlook the roof, and windows in adjacent buildings that overlook the roof.
   d. Substantiation:
      1) Preliminary Design: Drawings showing facade treatment for principal elevations identifying visible materials.
      2) Design Development: Drawings and artist's rendering showing all building elements that are

part of the shell with sizes and locations to scale.

3) Construction Documents: Details of building shell, annotated to show compliance with performance requirements.

C. Health and Safety:

1. Fire Resistance: The construction will provide fire resistance in accordance with code.
   a. Substantiation:
      1) Design Development: Identification of assemblies required to have fire resistance rating and method to be used to achieve rating.
      2) Construction Documents: Identifying numbers on the construction drawings.

2. Accidental Injury: The construction will protect pedestrians and building occupants in accordance with code and the following:
   a. The construction will prevent ice and snow from falling off building elements onto pedestrians, building occupants, and vehicles.
   b. The construction will protect pedestrians and building occupants from objects accidentally dropped from elevated observation decks, balconies, or plazas.
   c. Substantiation: As specified in Section 111 - Facility Performance.

3. Physical Security: The construction will provide protection as follows:
   a. Opaque Elements at Ground Level: Use materials that give the impression of strength, for discouragement of opportunistic attempts at intrusion.
   b. Glazed Elements at Ground Level: Minimize size and locate where under surveillance by staff at their normal workstations.
   c. Glazing at Ground Level: UL 972-2006 burglary resistant rating.
   d. Doors: ASTM F 476-1984(R02) or ASTM F 842-2004 as appropriate, Grade 10.
   e. Windows: Different levels of protection for different locations; see Section B22.
   f. Opaque Elements at Ground Level: Forced entry resistance of Class I in accordance with ASTM F 1233-1998(R04), minimum, and Grade 10, minimum, in accordance with ASTM F 476-1984(R02) adapted to suit element.
   g. Substantiation:
      1) Design Development: Identification of materials to be used, the physical properties that accomplish the security requirements, and details of anchorage to the structure.
      2) Construction Documents: Mock-up testing of materials used to comply with security requirements, except obviously compliant materials; construction details.

4. Ventilation of Special Spaces: The construction will provide outside air movement through enclosed shell volumes in accordance with code and the following:
   a. Minimum Ventilation Opening Area: Meet minimum referenced ASHRAE standards.
   b. Substantiation:
      1) Design Development: Drawings showing natural ventilation location, ventilation opening areas, and volumes being served.

D. Structure:

1. Structural Performance: The construction will support all loads without damage due to loads, in accordance with code.
   a. Special Loads: In addition to loads defined by code, the construction will be designed for loads from moving machinery, elevators, and cranes.
   b. Special Components: If design method is not specifically prescribed by code, design in accordance with ASCE 7-2005.
   c. The construction will provide shell elements to resist loosening or detachment in winds equivalent to the code design wind speed.
   d. Shell elements engineered by their manufacturer or fabricator, rather than by the engineer-of-record, will comply with the following additional requirements:

1) Manufacturer/fabricator employs licensed structural engineer to accomplish design of structural elements.
2) Manufacturer/fabricator has minimum of 5 years experience in the design and manufacture of similar structures.

e. Substantiation:
1) Preliminary Design: Detailed listing of design criteria and preliminary analysis, prepared by a licensed structural engineer.
2) Construction Documents: Detailed design analysis by licensed structural engineer (for structures engineered by their manufacturer or fabricator, engineer-of-record will provide detailed design criteria, with design analysis postponed until construction stage).
3) Construction: For structures engineered by their manufacturer or fabricator, detailed design analysis prepared by and shop drawings stamped by a licensed structural engineer, with approval of engineer-of-record recorded.

2. Construction Loads and Erection Stresses: The construction will accommodate temporary construction loads and erection stresses during construction.

E. Durability:

1. Service Life Span: Same as building service life, except as follows:
a. Load-Bearing Structural Members: Minimum of 100 years.
1) No anticipated deterioration when protected as constructed.
2) Protective Elements: Minimum 50 years.
b. Wall Primary Weather-Barrier Elements: Minimum 50 years functional and aesthetic service life, excluding joint sealers.
c. Transparent Elements (Glazing): Same as other wall primary weather-barrier elements, except accidental breakage is considered normal wear-and-tear.
d. Joint Sealers: Minimum 20 years before replacement.
e. Surfaces Exposed to View: Minimum 20 years aesthetic service life; in addition, deterioration includes color fading, crazing, and delamination of applied coatings.
f. Roof Covering Weather-Barriers: Minimum 20 years, fully functional.
g. Substantiation: As specified in Section 111 - Facility Performance, including service life analysis and life cycle cost analysis.

2. Water Penetration: The construction will prevent water penetration into the interior of shell assemblies, under conditions of rain driven by 70 mph (112 km/h) wind.
a. Exception: Controlled water penetration is allowed if materials will not be damaged by presence of water or freezing and thawing, if continuous drainage paths to the exterior are provided, and water passage to the building interior is prevented.
b. Substantiation: In addition to requirements specified for proven-in-use and proven-by-mock-up construction, drawings showing paths of water movement, with particular attention to changes in direction or orientation and joints between different assemblies.

3. Weather Resistance: The construction will minimize deterioration due to precipitation, sunlight, normal temperature changes, and atmospheric pollutants.
a. Deterioration includes corrosion, shrinking, cracking, spalling, de-lamination, abnormal oxidation, decay and rot.
b. Surfaces Exposed to View: Deterioration adversely affecting aesthetic life span includes color fading, crazing, and de-lamination of applied coatings.
1) Coating Performance: AAMA 2605-2005, minimum.
2) Coating Salt Spray Resistance: No deterioration when tested in accordance with ASTM B 117-2003 for 1000 hour exposure with 5 percent salt fog at 95 degrees F (35 degrees C).
c. Joint Components and Penetration Seals: Capable of resisting expected thermal expansion and contraction; use overlapping joints that shed water wherever possible.
d. Transparent Elements (Glazing): No haze, loss of light transmission, or color change, during entire

expected service life.

e. Service Temperature: Low temperature equal to historically-recorded low; high temperature equal to that expected due to any combination of air temperature and heat gain from solar and other sources.
f. Freeze-Thaw Resistance: Adequate for climate of project.
g. Corrosion Resistance: In locations exposed to the outdoor air or in potential contact with moisture inside shell assemblies, the construction will use only corrosion-resistant metals as defined in this section.
h. Ozone Resistance: Do not use materials that are adversely affected by ozone.
i. Substantiation:
   1) Design Development: Details of proven-in-use materials and test reports.

4. Impact Resistance: The construction will resist damage due to impact in accordance with code and the following:
   a. The construction will minimize damage due to potential vandalism.

5. Moisture Vapor Transmission: The construction will prevent deterioration of materials due to condensation of moisture vapor inside assemblies.
   a. Use supplementary vapor retarder if necessary to meet requirements.
   b. Use method of sealing joints between elements that will be effective given available construction practices.
   c. Substantiation:
      1) Preliminary Design: Identification of building elements providing moisture barrier, materials to be used, and data showing performance.
      2) Design Development: Proven-in-use or proven-by-mock-up data.

6. Wear Resistance: Provide resistance to normal wear-and-tear in accordance with code and the following:
   a. Elements Within Reach of Pedestrians: Minimize degradation from rubbing and scratching caused by pedestrians.
   b. The construction will minimize degradation caused by windblown sand and acid rain.

PRODUCTS

A. Corrosion-Resistant Metals:

1. Hot-dipped galvanized steel, with minimum zinc coating of 0.90 oz/sq ft (275 gm/sq m) total both sides.

2. Stainless steel, Type 304 or 316.

3. Aluminum.

B. Coated Finishes:

1. The construction will use one of the following:
   a. Fluoropolymer coating (70 percent Kynar 500 (tm) or Hylar 5000(tm)), minimum two coats.

C. Do not use:

1. Pre-engineered metal building.

2. Air-supported structure.

3. Different metals subject to galvanic action in direct contact with each other.

4. Aluminum in direct contact with concrete or cementitious materials.

5. Exterior Insulation Finishing Systems (EIFS).

END OF SECTION B

SECTION B1
SUPERSTRUCTURE

PERFORMANCE

A. Basic Function:

1. Provide structural elements, above grade and within basements, capable of supporting all anticipated loads without failure or damage.

2. The superstructure will not require any electrically-operated or fuel-powered construction for support of floor or roof members.

3. The superstructure comprises:
   a. Elevated Floors (B11): Floor construction above grade and within basements, including balcony, mezzanine, and ramp floors, floors elevated for access, stair construction if part of the structure, and roof decks intended for occupant live load; and the elements required for their support, insulation, fireproofing, and firestopping.
   b. Roofs (B12): Roof construction, including canopies, and elements required for their support, insulation, fireproofing, and firestopping.

4. Where superstructure elements also must function as elements defined within another element group, meet requirements of both element groups.

5. In addition to the requirements of this section, the construction will comply with all applicable requirements of Section 111 - Facility Performance and Section B - Shell.

B. Amenity and Comfort:

1. Water Penetration: Where roof coverings as specified in Section B3 are not used over roofs provide supplementary waterproof construction providing equivalent protection.

2. Vibration: Isolate structure from sources of vibration. Also refer to Section 111 and project program for additional information.

3. Floor Deflection: Refer to project program and Section 111 for additional information.

C. Health and Safety:

1. Fire: The superstructure will be constructed of members with combustibility, flame spread, and smoke generation characteristics not greater than allowed by code.

2. Fire Resistance: Provide fire resistance in accordance with code and the following:
   a. Provide firestopping at openings in fire-rated superstructure elements that is rated at not less than the required fire resistance of the penetrated element.
   b. Substantiation:
      1) Preliminary Design: Identification of major fire resistive materials and systems.
      2) Design Development: List of laboratory tested fire resistive assemblies to be used.
      3) Construction Documents: Identification of laboratory test numbers on the construction drawings for fire resistive assemblies to be used.

3. Grounding: When grounding of electrical systems is accomplished using structural members, the superstructure will be designed and constructed to prevent shock to occupants.

4. Exposed structure above laboratory areas shall avoid waffled or pocketed construction that might potentially collect escaped hydrogen and other gases lighter than air.

D. Structure:

1. Capacity: The superstructure will be constructed of load-bearing structural members of capacities required by code.

2. Dead Loads: The superstructure will be designed to resist loads from weights of materials, construction, and fixed service equipment.

3. Live Loads:
   a. Floors: The construction will resist uniformly distributed, concentrated, and impact loads with code permitted live load reductions.
   b. Roofs: Resist uniformly distributed, concentrated, and impact loads.

4. Environmental Loads:
   a. Wind: Basic wind speed 100 mph fastest mile; 120 mph for 3 second gust, Importance Factor of 1.00, Exposure A.
   b. Snow: Ground snow load of 10 psf (4.8 kPa), snow exposure factor of 0.7, snow load importance factor of 1.0.
   c. Rain: Resist loads from ponding rainwater when the primary drainage system is blocked.
   d. Earthquake: In compliance with provisions of code for Category B.

5. Structural Design: In addition to the requirements of the code, the construction will comply with ASCE 7-2005.

6. Structural Serviceability: The superstructure will comply with requirements and recommended design procedures of ASCE 7-2005.

E. Durability:

1. Moisture Resistance of Load-Bearing Members: The superstructure will use materials that are not damaged by contact with water or moisture vapor.

2. Impact Resistance of Load-Bearing Members: The superstructure will use materials that are not easily damaged by common hand tools.

3. Applied Fireproofing Materials:
   a. In Locations where Concealed by Permanent Construction:
      1) Density: 10 lb/cu ft (175 kg/cu m), minimum.
      2) Impact Strength: Passing ASTM E 760-1992(R05).
   b. Interior Locations, Where Exposed to Air but Out of Reach of Occupants (Above 10 ft (3 m) from Floor):
      1) Density: 14 lb/cu ft (224 kg/cu m), minimum.
      2) Impact Strength: Passing ASTM E 760-1992(R05).
      3) Bond Strength: 300 psf (14.4 kPa), minimum, tested in accordance with ASTM E 736-2000(R06).
   c. Exterior Locations, Where Exposed to Air but Out of Reach of Occupants (Above 10 ft (3 m) from Ground):
      1) Density: 21 lb/cu ft (340 kg/cu m), minimum.
      2) Impact Strength: Passing ASTM E 760-1992(R05).
      3) Moisture Resistance: Not affected by precipitation or freeze-thaw.
   d. Exposed Locations on Exterior and Interior within Reach of Occupants (Below 10 ft (3 m):
      1) Density: 39 lb/cu ft (625 kg/cu m), minimum.
      2) Impact Strength: Passing ASTM E 760-1992(R05).
      3) Moisture Resistance: Not affected by precipitation or freeze-thaw.

4. Portions of Superstructure Exposed on Exterior: The superstructure will comply with requirements of Section B for water penetration, weather resistance, impact resistance, and wear resistance.

END OF SECTION B1

SECTION B11
ELEVATED FLOORS

PERFORMANCE

A. Basic Function:

1. Provide all floor construction above grade and within basements, including balcony, mezzanine, and ramp floors, floors elevated for access, stair construction if part of the structure, and roof decks intended for occupant live load; and the elements required for their support, insulation, fireproofing, and firestopping, as well as finishing, if an integral part of the floor construction.
   a. Floor Flatness (FF): Provide suspended floors that are engineered and constructed to achieve degree of flatness as follows, when measured in accordance with ASTM E 1155-1996(R01):
      1) Specified Overall Value (SOV): 25.
      2) Minimum Localized Value (MLV): 17.
   b. Floor Levelness (FL): Provide suspended floors that are engineered and constructed to achieve degree of levelness as follows, when measured in accordance with ASTM E 1155-1996(R01):
      1) Specified Overall Value (SOV): 20.
      2) Minimum Localized Value (MLV): 13.
2. Where floor elements also must function as elements defined within another element group, meet requirements of both element groups.
3. In addition to the requirements of this section, the construction will comply with all applicable requirements of Section 111 - Facility Performance, Section B - Shell, and Section B1 - Superstructure.

B. Amenity and Comfort:

1. Impact Sound Transmission and Insulation: See Section C for requirements.

C. Durability:

1. Exposed Interior Structural Floor Surfaces: Comply with requirements for floor finishes specified in Section C.
2. Exposed Exterior Structural Floor Surfaces: The construction will comply with requirements for pavement finishes.

PRODUCTS

A. Structure Supporting Floors:

1. Use one or more of the following:
   a. Structural steel beams, columns, girders, joists, and wind-bracing.
   b. Cast-in-place reinforced concrete beams, columns, walls, girders, and joists.
   c. Precast concrete beams, columns, tees, and hollow slabs.
   d. Open-web steel joists or joist girders.
   e. Load-bearing concrete masonry walls.
2. The construction will not use:
   a. Wood structural members.
   b. Non-reinforced load-bearing masonry.

B. Elevated Floors:

1. Use one or more of the following:
   a. Concrete-filled steel deck.
   b. Concrete-filled composite steel deck, minimum 2-1/2 inches (63 mm) concrete thickness from top of steel deck.
   c. Cast-in-place reinforced concrete slabs, minimum 4 inches (200 mm) thick.

d. Precast concrete tees or hollow core slabs covered with minimum 1-1/2 inches (38 mm) concrete.

2. Do not use:
   a. Wood structural members.

C. Mezzanine Floors:

1. Use one of the following:
   a. Same construction as other floors.

2. Do not use:
   a. Wood structural members.

D. Stairs and Stair Landings: See Section C15.

E. Interior Exposed Structural Floor Finish:

1. Use one of the following:
   a. Any finish specified in or meeting performance requirements of Section C16 and allowed for interior space usage.

END OF SECTION B11

SECTION B12
ROOFS

PERFORMANCE

A. Basic Function:

1. Provide all roof construction, including canopies, and elements required for their support, insulation, fireproofing, and firestopping.
2. Where roof elements also must function as elements defined within another element group, meet requirements of both element groups.
3. In addition to the requirements of this section, the construction will comply with all applicable requirements of Section 111 - Facility Performance, Section B - Shell, and Section B1 - Superstructure.

B. Amenity and Comfort:

1. Thermal Performance, Including Elements on Top of Roof Deck:
   a. Average Thermal Transmittance: U-value of 0.25 IP (1.42 SI).

C. Durability:

1. Exposed Roof Deck Surfaces: Comply with requirements for roofing weather barrier specified in Section B31.

PRODUCTS

A. Structure Supporting Roofs:

1. Use one or more of the following:
   a. Structural steel beams, columns, girders, joists, and wind-bracing.
   b. Cast-in-place reinforced concrete beams, columns, walls, girders, and joists.
   c. Precast concrete beams, columns, tees, and hollow slabs.
   d. Open-web steel joists or joist girders.
   e. Load-bearing concrete masonry walls.
2. Do not use:
   a. Wood structural members.
   b. Non-reinforced load-bearing masonry.

B. Roof Decks:

1. Use one or more of the following:
   a. Steel deck without concrete fill.
   b. Concrete-filled steel deck.
   c. Concrete-filled composite steel deck, minimum 2-1/2 inches (63 mm) concrete thickness from top of steel deck.
   d. Cast-in-place reinforced concrete slabs, minimum 4 inches (100 mm) thick.
   e. Precast concrete tees or hollow core slabs without additional concrete covering.
   f. Precast concrete tees or hollow core slabs covered with minimum 1-1/2 inches (38 mm) concrete.
2. Do not use:
   a. Wood structural members.

C. Insulation on Top of Decks: See Section B31.

D. Roof Deck Finish Surface: See Section B31.

END OF SECTION B12

SECTION B2
EXTERIOR ENCLOSURE

PERFORMANCE

A. Basic Function:

1. Provide an essentially vertical separation between exterior and interior conditioned space, that keeps out weather, uninvited people, and animals and insects, without unusual action by occupants, while providing convenient movement of occupants between inside and outside, desirable natural light, and views from inside to outside.

2. The elements forming the vertical separation comprise the exterior enclosure and consist of:
   a. Exterior Walls (B21).
   b. Exterior Windows and Other Openings (B22).
   c. Exterior Doors (B23).
   d. Exterior Wall Fixtures (B24).

3. Where exterior enclosure elements also must function as elements defined within another element group, meet requirements of both element groups.

4. In addition to the requirements of this section, comply with all applicable requirements of Section 111 - Facility Performance and Section B - Shell.

B. Amenity and Comfort:

1. Thermal Performance:
   a. Average Thermal Transmittance: U-value of 0.05 for wall elements and 0.025 for roof elements.
   b. Minimum performance values for individual enclosure elements are also specified in other Sections.

2. Water Penetration: As specified in Section B.

3. Airborne Sound Isolation: Achieve the following minimum outdoor-indoor level reductions (OILR values) for perimeter spaces, when tested in accordance with ASTM E 966-2004 and classified in accordance with ASTM E 413-2004:
   a. Quiet space (NC values of 20-30) and low exterior noise source (dBA values of 40 or lower): OILR 30.
   b. Moderately noisy space (NC values of 30-40) and moderate exterior noise source (dBA values of 40-60): OILR 30.
   c. Noisy space (NC values of 40-50) and loud exterior noise source (dBA values of 60-70): OILR 30.

4. Glazing Appearance:
   a. Tint: The construction will use as little tint as possible while complying with other requirements.
   b. Reflectivity: The construction will not use glass that has been treated to increase its natural reflectivity.

C. Health and Safety:

1. Safety Glazing: Do not use fully tempered glass more than 25 feet (7.6 m) above grade.

2. Fire Resistance:
   a. All Materials of Exterior Enclosure: Non-combustible, no exceptions.

D. Structure:

1. Structural Performance: No requirements in addition to those specified in Section B.

E. Durability:

1. Ambient Temperature Change: Allow for daily expansion and contraction within and between

elements caused by temperature range from most extreme low temperature to 70 degrees F (39 degrees C) greater than the most extreme high temperature, in any year, without causing detrimental effect to components and anchorage.

2. Water Penetration: As specified in Section B.

3. Impact Resistance:
   a. Elements Adjacent to Traffic Lanes: The construction will resist damage from accidental passenger vehicular impact at 5 mph (8 km/hr) maximum velocity.

4. Glass:
   a. Type and thickness in accordance with ASTM E 1300-2004 combined with other applicable factors; minimum thickness 6 mm for each light.

PRODUCTS

A. Do not use pre-engineered metal buildings for penthouses

END OF SECTION B2

SECTION B21
EXTERIOR WALLS

PERFORMANCE

A. Basic Function:

1. Provide physical separation between exterior and interior conditioned space, that keeps out weather, uninvited people, and animals and insects.

2. The elements forming the physical separation comprise the exterior walls and consist of the supporting structure, the exterior skin, vapor retarders, air barriers, and insulation, the interior skin if an integral part of the wall, exterior screens and railings, balcony walls and parapets, exterior soffits unless they do not form a weather barrier, firestopping and draftstopping within wall and between wall and floors, and other exterior wall elements.

3. Where exterior wall elements also must function as elements defined within another element group, meet requirements of both element groups.

4. In addition to the requirements of this section, the construction will comply with all applicable requirements of Section 111 - Facility Performance, Section B - Shell, and Section B2 - Exterior Enclosure.

B. Amenity and Comfort:

1. Thermal Performance: Not applicable to parapets or balcony walls.
   a. Average Thermal Transmittance of Vertical Walls: U-value of 0.05, maximum.
   b. Provide continuous insulation over entire enclosure.
   c. Condensation Resistance Factor: 75 based on winter design temperatures of -12 C (10 F) outside temperature, 21 C [70 F) inside temperature, 40 percent inside relative humidity measured per AAMA 1503-1998.
   d. Exterior Soffits and Ceilings: Same requirements as exterior walls.

2. Air Barrier: Continuous separate membrane over entire exterior enclosure that allows moisture vapor transmission while preventing air infiltration.
   a. Air Permeance: 75 based on winter design temperatures of -12 C [10 F) outside temperature, 21 C [70 F) inside temperature, 40 percent inside relative humidity.
   b. Vapor Permeance: At least 1 perm (57 ng/Pa/s/sq m), when tested in accordance with ASTM E 96/E 96M-2005.

3. Acoustical Isolation:
   a. Provide composite STC values not less than OILR values required for the exterior enclosure in Section B2, when individual components are tested in accordance with ASTM E 90-2004 and classified in accordance with ASTM E 413-2004.

4. Appearance:
   a. Surface Texture: Provide exterior wall surfaces with multiple contrasting textures with visual interest.

C. Structure:

1. Wind Design: No damage when tested in accordance with ASTM E 330-2002 at 1.5 times positive and negative design wind loads using 10 second duration of maximum load.
   a. Deflection: 1/360 of span, maximum, unless otherwise indicated.
   b. Unit Masonry Veneer: Maximum deflection of 1/600 of span.
   c. Members Supporting Glass: Maximum deflection of flexure limit of glass; with full recovery of glazing materials.

D. Durability:

1. Water Penetration: Drain water, moisture, and condensation entering assembly to the exterior.
2. Joint Sealers in Exterior Skin: Life span expectancy equal to that specified for primary weather barriers.
   a. Exception: Lesser life span, with minimum of 20 years, is acceptable providing the joint surface does not exceed 1 percent of the face surface of the jointed area and the joint design provides secondary water-shedding design.
3. Vapor Retarder: Continuous separate membrane over entire exterior enclosure, located on the warm side of the winter dew point.
   a. Vapor Permeance: 1 perm (57 ng/Pa/s/sq m), maximum when tested in accordance with ASTM E 96/E 96M-2005.
   b. The construction will be in accordance with ASTM E 1677-2005, including appendixes, and ASTM C 755-2003.

PRODUCTS

A. Joint Sealers in Exterior Skin:

1. Use one of the following:
   a. Silicone sealant at all locations unless indicated otherwise.

B. Air Barrier:

1. Use one of the following:
   a. Plastic sheet.
   b. Fluid applied.

C. Insulation:

1. Use one of the following:
   a. Board insulation.
   b. Batt insulation.
   c. Foamed-in-place insulation.

D. Glazing: Glass.

1. Use one or more of the following:
   a. Heat-strengthened glass.
   b. Fully tempered glass.
   c. Tinted glass.
   d. Low E glass.
   e. Double pane insulated glass units.

METHODS OF CONSTRUCTION

A. The construction will not use any of the following practices or procedures:

1. Exterior Insulation and Finish Systems.

END OF SECTION B21

SECTION B22
EXTERIOR WINDOWS AND OTHER OPENINGS

PERFORMANCE

A. Basic Function:

1. Fill, cover, close, or otherwise protect all openings in the exterior walls (other than doors) so that the entire exterior enclosure functions as specified, using windows and other opening elements as specified, without using components that must be installed at changes of season.

2. The elements comprising exterior windows and other openings include windows, fixed glazing other than glazed walls, ventilation openings, protection devices for openings, and elements that form or complete the openings, unless an integral part of another element.

3. Where exterior window and other opening elements also must function as elements defined in another element group, meet requirements of both element groups.

4. In addition to the requirements of this section, the construction will comply with all applicable requirements of Section 111 - Facility Performance, Section B - Shell, and Section B2 - Exterior Enclosure.

B. Amenity and Comfort:

1. Thermal Performance of Elements Forming Exterior/Interior Separation:
   a. Maximum Thermal Transmittance of Any Individual Component: U-value of 0.50 Btu/sq ft/hr/deg F (2.8 W/sq m K) when tested in accordance with ASTM C 1363-2005 or ASTM C 1199-2000.
   b. Exception to Condensation Resistance Requirement: For glazing and frames, minimum CRF of 35 when measured in accordance with AAMA 1503-1998.
   c. Substantiation:
      1) Construction: For standard manufactured products, certification of specified properties by NFRC or other testing agency acceptable to NREL; for custom-fabricated elements, test reports.

2. Air Infiltration:
   a. Operable Openings Intended to be Normally Closed: Maximum of 0.3 cfm/sq ft (5 cu m/h/sq m), measured in accordance with ASTM E 283-2004 at differential pressure of 1.57 psf (75 Pa).
   b. Mechanical Ventilation Openings: Automatically closed when ventilation is not required. Unless ducted, maximum of 0.3 cfm/sq ft (5 cu m/h/sq m) of crack when closed, measured in accordance with ASTM E 283-2004 at differential pressure of 1.57 psf (75 Pa).
   c. Substantiation:
      1) Construction: For standard manufactured fenestration products, certification of specified properties by NFRC or other testing agency acceptable to NREL; for other elements, test reports.

3. Acoustical Performance:
   a. Window Sound Transmission Class: Minimum 31 STC, as measured in accordance with ASTM E 90-2004 and classified in accordance with ASTM E 413-2004.

4. Appearance:
   a. Sight Lines of Glazed Areas: Provide maximum glazing area with minimum interruption by framing members.
   b. Frames: Frames of openings will be designed and constructed to give a flush appearance without shadow lines.

C. Health and Safety:

1. Fire Resistance: Rating as required to maintain fire resistance rating of exterior wall in which they

occur.

2. Forced Entry Resistance:
   a. Openings at Ground Floor: Operable windows are acceptable provided the opening size does not exceed 5 inches, and hardware provides a forced opening resistance of not less than 150 lbs.
   b. Openings Above the Ground Floor: Class I in accordance with ASTM F 1233-1998(R04), minimum, and Grade 10, minimum, in accordance with ASTM F 588-2004
   c. All operable windows shall meet requirements of DOE M470.4-2.

D. Structure:

1. Lintels: Constructed to span openings and support loads imposed by exterior wall; maximum deflection of 1/360 of span, vertically and horizontally.

2. Wind Design: No damage when tested in accordance with ASTM E 330-2002 at 1.5 times positive and negative design wind loads using 10 second duration of maximum load.
   a. Members Not Supporting Glass: Maximum deflection of 1/180 of span.
   b. Members Supporting Glass: Maximum deflection of flexure limit of glass; with full recovery of glazing materials.

E. Durability:

1. Water Penetration: The construction will be designed openings and components of openings to positively drain water to exterior of the building.
   a. Top of Openings: If wall construction does not provide its own methods of drainage, the construction will use separate flashing to prevent water from entering opening components or the interior of the building.
   b. Bottom of Openings: Integral or separate sill or flashing to prevent water running over or draining out of opening components from entering the wall construction below or the interior of the building.

F. Operation and Maintenance:

1. Cleanability: Glazed openings will be designed to permit the exterior surface to be cleaned from inside or outside without removing window sash.

2. Operating Components: Remaining operable for 10 years under normal exposure conditions for the project site.

PRODUCTS

A. Windows (Operable and Fixed):

1. Glazing: Double pane insulated units.

B. Fixed Glazing:

1. Glazing: Double pane insulated units.

C. Ventilation Openings: Cover all natural and mechanical ventilation openings.

1. Material: Aluminum, steel, or stainless steel.

END OF SECTION B22

SECTION B23
EXTERIOR DOORS

PERFORMANCE

A. Basic Function:

1. Secure all openings in the exterior wall that function to allow the entrance and exit of people, vehicles, and goods, so that the entire exterior enclosure functions as specified, using doors as specified, without using components that must be installed at changes of season.

2. The elements comprising exterior doors include doors of all sizes and uses, gates, and elements that form or complete the openings, unless an integral part of another element.

3. Where exterior door elements also must function as elements defined within another element group, meet requirements of both element groups.

4. In addition to the requirements of this section, the construction will comply with all applicable requirements of Section 111 - Facility Performance, Section B - Shell, and Section B2 - Exterior Enclosure.

B. Amenity and Comfort:

1. Thermal Performance:
   a. Maximum Thermal Transmittance of Any Individual Component: U-value of 0.30 Btu/sq ft/hr/deg F (1.7 W/sq m K) when tested in accordance with ASTM C 1363-2005.
   b. Exception to Condensation Resistance Requirement: Minimum CRF of 35 when measured in accordance with AAMA 1503-1998.

2. Air Infiltration: Maximum of 0.20 cfm/ft (1.1 cu m/hr/m) of crack length, measured in accordance with ASTM E 283-2004 at differential pressure of 1.57 psf (75 Pa).
   a. Substantiation:
      1) Design Development: Details of method of weather sealing; test reports on door/frame assemblies.

3. Water Penetration: Substantiation will provide justification for exemption of door openings from water penetration requirements of Section B and B2.
   a. Substantiation:
      1) Design Development: Details of method of weather sealing; test reports on door/frame assemblies.

4. Acoustical Performance:
   a. Sound Transmission Class: STC values as follows, when measured in accordance with ASTM E 90-2004 and classified in accordance with ASTM E 413-2004:
      1) Main Entrance Doors: STC 33.
      2) Other Pedestrian Doors: STC 36.
      3) Service Doors: STC 36.

5. Transparency:
   a. The construction will provide fully glazed pedestrian doors at building entrances.

6. Convenience and Accessibility:
   a. Door Handles and Knobs: As required by code; where code and other requirements allow an option exit devices will be provided.
   b. Mode of Operation: Self-closing, with manual hold-open, unless otherwise indicated.
      1) Main Entrances: Power-assisted.
      2) Service Entrances: Power-operated.
   c. Power-Assisted and -Operated Door Control:

1) Local actuators each side unless otherwise indicated.
2) Use least obtrusive method of control/actuation possible.
3) Main Entrances: Local actuators only.

d. Provide doors of sufficient size in mechanical areas to accommodate replacement and/or expansion of equipment.

7. Appearance:
   a. Doors at Building Entrances: Match windows and window framing.

C. Health and Safety:

1. Emergency Egress:
   a. The construction will provide exit doors minimum 36 inches (914 mm) wide.

2. Fire Resistance:
   a. Doors Required by Code to be Fire Resistive: Fire resistance rating as required by code, for fire resistance rating of exterior wall in which doors occur, tested in accordance with a method acceptable to local authorities.
   b. Doors into Stairs: Maximum 450 degrees F (232 degrees C) temperature rise rating at 30 minutes standard fire test exposure.

3. Physical Security:
   a. Doors non-removable from outside without use of key.
   b. At Locations Not Facing a Street: No glazing.
   c. Each exterior door will be secured using a "fail-secure" method that allows entrance plus exit from inside using only one motion.
      1) Exceptions: The following will not allow entrance:
         a) Exit doors opening from exit stairways directly to exterior (Exit Only function).
         b) Doors into data center.
      2) Keys: Type as required to minimize unauthorized entry.
         a) Keying: Key to the existing keying system.
      3) Lock Functions: Appropriate to the location and function and as follows:
         a) Entrance Doors: Public Entry/Exit ("nightlatch").
         b) Service Entry Doors: Always-Locked.
         c) Exit Doors from Stairwells and Fire Exits: Exit Only.
      4) Lock Function Definitions: As described in ANSI/BHMA A156.2-2003 (F36-F48, F75-F94, F107-F109), A156.3-2001 ("X" prefix), A156.5-2001 ("E" prefix), A156.12-2005 (F95-F106), and A156.13-2005 (F01-F25); type of lock required may also be governed by other criteria.
         a) Always-Locked: F86.
         b) Classroom: F84.
         c) Exit Only: F13, with no outside trim, no thumb turn or other unlocking feature inside, no holdback or dogging.
         d) Office: F82 Grade 1, operation of key unlocks outside handle.
         e) Store Door: F91.
   d. Forced Entry: Provide doors capable of resisting forced entry equivalent to:
      1) Swinging Doors: ASTM F 476-1984(R02) Grade 10.
      2) Sliding Doors: ASTM F 842-2004 Grade 10.
      3) Locks and Lock Cylinders: ANSI/BHMA A156.5-2001 Security Grade 1.

4. Glazing in Doors: Comply with requirements for safety glazing, security, and forced entry specified in Sections B and B2.

D. Structure:

1. Lintels: Constructed to span door openings and support loads imposed by exterior wall with maximum deflection vertically and horizontally of 1/360 of span.

2. Door Frames: Constructed to span door opening with maximum deflection vertically and horizontally of 1/360 of span.

E. Durability:

1. Water Penetration: Openings and components of openings will be designed to positively drain water to exterior of the building.
   a. Top of Openings: If wall construction does not provide its own methods of drainage, the construction will use separate flashing to prevent water from entering opening components or the interior of the building.
   b. Bottom of Openings: Integral or separate sill or flashing to prevent water running over or draining out of opening components from entering the wall construction below or the interior of the building.

2. Physical Endurance:
   a. Doors, Frames, and Hardware: ANSI A250.4-2001 Level A using hardware specified.
   b. Doors, Frames, and Anchors: NAAMM HMMA 862-2003 endurance test requirements.

3. Wear Resistance:
   a. Door Surfaces: Scuff-resistant in areas where foot impact is likely; highly scratch-resistant in areas where hand contact is likely.
   b. Door Handles and Knobs: Highly scratch-resistant and of finish that will minimize appearance changes due to wear; satin or brushed finish and no plated or coated finishes.

4. Flexible Seal Materials: Minimize deterioration due to operation of doors and aging.

5. Swinging Doors: Control door swing to prevent damage due to impact, to either door or element impacted.

F. Operation and Maintenance:

1. Service Life Span of Operating Components: Remaining operable for 10 years under normal exposure conditions for the project site.

2. Ease of Use and Repair: Doors will be easy to use by occupants, easy to repair or service, and with operating components easy to replace.

PRODUCTS

A. Main Entrance Doors:

1. Use one of the following:
   a. Glazed aluminum doors.

B. Other Pedestrian Doors:

1. Provide weatherstripping and thresholds.

2. Provide removable mullions at double doors.

3. One of the following will be used:
   a. Aluminum-framed glazed entrance doors.
   b. Hollow steel doors.

4. The construction will not use:
   a. Knock-down hollow metal frames.

C. Service Doors:

1. One of the following will be used:

a. Overhead coiling steel doors.
b. Sectional overhead steel doors.

D. Joint Sealers: Same as specified in Section B21.

E. Glazing in Doors: Glass and plastic.

1. Type: Double pane insulated glass units.

F. Door Louvers:

1. Louvers in Metal Doors: Same material as doors.

G. Hardware for Swinging Doors:

1. Match the existing hardware campus keyway. Existing campus standard is Grade 1 Best Locks, 9K series mortise locks.
2. The construction will use satin, chrome or stainless steel finish.
3. Hinges: Ball-bearing butt hinges, offset-hung pivots, or continuous hinges.
4. Exit Devices: Unless specifically indicated as one type, mortise type or concealed vertical rod type.
5. Locksets: Unless specifically indicated as one type, provide mortise locks throughout.
   a. Doors will not use rim type auxiliary locks, lock combinations requiring two hands for operation, interconnected locks, or bored (cylindrical locks).
6. Door Closers: Unless specifically indicated as one type, surface overhead frame-mounted type, surface overhead door-mounted type, in-the-floor mounted type, concealed overhead frame-mounted type, concealed overhead door-mounted type, or spring hinges.
   a. Doors will not use spring hinges.
7. Door Stops: Unless specifically indicated as one type, floor-mounted type, wall-mounted type, or overhead door/frame mounted type.
8. Door Hold-Opens: Unless specifically indicated as one type, floor-mounted type, wall-mounted type, or overhead door/frame mounted type.
9. All door hardware shall be compatible with NREL keyway system provided by Oak Security Systems.
10. All doors normally unlocked by a card key system shall remain locked in the event of power loss, but life safety egress shall not be impeded.

END OF SECTION B23

SECTION B24
EXTERIOR WALL FIXTURES

PERFORMANCE

A. Basic Function:

1. Exterior wall fixtures include all elements attached to the outside of the exterior walls, unless consisting of equipment or services fixtures. Fixtures provided will be those made necessary by the design and the following:
   a. Main Building Identification Sign: Mounted on main elevation, for visibility from adjacent street; provide one.
2. See Section G22 for ground-mounted flagpoles and ground-mounted signs.
3. Where exterior wall fixtures also have a function defined in another element group, design such elements as specified for that element group, in addition to the requirements specified in this section.
4. In addition to the requirements of this section, the construction will comply with all applicable requirements of Section 111 - Facility Performance, Section B - Shell, and Section B2 - Exterior Enclosure.

B. Amenity and Comfort:

1. Noise Reduction:
   a. Signs Noise Level: Not detectable by pedestrian or building occupants 20 feet (6 m) from the sign.
2. Appearance:
   a. Signs: Legible during daylight and nighttime hours by pedestrians, and motorists from distance specified.

C. Structure:

1. Anchorage: The construction will be designed wall fixtures to be supported from building structural frame rather than from exterior wall.

D. Durability:

1. Water Penetration Resistance:
   a. The construction will maintain integrity of exterior wall water penetration resistance at points of wall fixture attachment to supporting structure.
2. Weather:
   a. Surface Finish: Minimum service life of 10 years without color deterioration, except for flags.
3. Impact Resistance:
   a. Signs: For signs located at grade and the first floor of the building, constructed to resist damage from vandalism.

PRODUCTS

A. Signs:

1. One of the following will be used:
   a. Dimensional letter signs using aluminum or stainless steel letters.

END OF SECTION B24

SECTION B3
ROOFING

PERFORMANCE

A. Basic Function:

1. Provide a weather-proof enclosure over the entire "top-side" of building that also excludes unwelcome people, animals, and insects without requiring specific action by occupants, while shedding water and preventing uncontrolled water infiltration, withstanding anticipated loading conditions, providing required access, and permitting the entry of desirable natural light.

2. Provide all fixtures needed on the roof due to the design or indicated in the project program.

3. Roofing comprises the following elements:
   a. Roof Coverings (B31): Weather barriers, insulation, wearing surfaces, water collectors and conductors; including coverings over plaza decks, balconies, and other exposed floors.
   b. Roof Openings (B32): Skylights, ventilation openings, access openings, and other roof opening elements.
   c. Roof Fixtures (B33): All elements attached to the roof, unless equipment or services.

4. Where roofing elements also must function as elements defined within another element group, meet requirements of both element groups.

5. In addition to the requirements of this section, the construction will comply with all applicable requirements of Section 111 - Facility Performance and Section B - Shell.

6. Substantiation:
   a. Post-Construction: Roof inspection conducted in the first spring after completion of roofing, after chance of snow has passed.

B. Amenity and Comfort:

1. Run-Off: The construction will direct water run-off to storm drains without splashing or dripping.

2. Noise of Precipitation: The construction will use materials that dampen the sound of precipitation on the roof to maintain interior ambient sound levels as specified in Section B.

3. Appearance:
   a. Concealment of Services and Equipment: The construction will provide permanent concealment of rooftop items using substantial construction other than screens.
   b. Color: Compatible with energy efficiency design.
   c. Cleanliness: In addition to requirements of Section B for cleanliness of exterior surfaces, roofing surfaces that are exposed to view will be constructed of surface materials that will conceal dirt.
   d. Ponding: Arrange drainage of roof so no ponding will occur, regardless of whether roofing material will withstand ponding of water or not.

C. Health and Safety:

1. Roof Worker Safety: The construction will provide safe design and safety measures as required by code and the following:
   a. The construction will provide permanently installed supports for equipment used for cleaning windows and other glazed areas of the shell.

2. Fire Resistance: In addition to fire resistance specified in Section B, the construction will provide materials that will prevent:
   a. Roof surface catching fire due to external fire sources.
   b. Roof coverings catching fire due to internal fire sources.
   c. Substantiation:

1) Design Development: Identification of assemblies or methods used.
2) Construction Documents: Fire rating identification numbers recognized by code authorities, on the construction drawings.

3. Physical Security: Consider the roof area and all roof openings unsupervised.
   a. Fixed Homogeneous Elements: Forced entry resistance of Class I in accordance with ASTM F 1233-1998(R04), minimum.
   b. Roof Openings and Assemblies: Forced entry resistance of Class I in accordance with ASTM F 1233-1998(R04), minimum, and Grade 10 in accordance with ASTM F 476-1984(R96) adapted to suit assembly.

4. Any roof area that will see regular research activity shall be constructed as a normally occupied area, complying with requirements including guard rails and appropriate walking surface. One building elevator shall access the roof work area.

5. Roof areas that will contain installations or equipment that require periodic maintenance shall have roof edges with guard rails. All other roof areas shall be equipped with accessible anchor points built for personal fall arrest systems

D. Structure:

1. Rainwater Load: As required by code.

2. Roof Component Wind Resistance:
   a. Uplift: Same pressure as specified in code for structural members.
   b. Substantiation:
      1) Design Development: Identification of assemblies or methods used.
      2) Construction Documents: Identifying numbers on the construction drawings.

3. Snow Load:
   a. Roof Opening Elements: Exceed code requirements by 15 percent.

E. Durability:

1. Weather Resistance: The construction will provide weather-exposed roof coverings and other components that comply with weather resistance specified in Section B and the following:
   a. Minimization of Deterioration Due to Weather: For weather-barrier materials, minimization means no deterioration that adversely affects water penetration resistance at any time during the specified service life span.
   b. Substantiation:
      1) Design Development: As specified for service life span in Section 111, including service life analysis and life cycle cost analysis.

2. Water Penetration: None, under conditions of rain driven at 70 mph (112 km/h), unless water paths are completely accessible.
   a. Substantiation:
      1) Construction: Water flood tests of roof areas that can accumulate rainwater if primary drains are blocked, up to depth for which structure is designed.

3. Minimum Slope:
   a. Field of Roof: 1/4 inch per foot (1:48).
   b. Water Conductors: 1/8 inch per foot (1:100).

4. Ice: Roofing elements will be designed to avoid damage due to ice formation and buildup on roofing and in water conductors.

5. Wear Resistance:
   a. Surfaces in Areas Occupied in Manner Similar to Interior Spaces: Same requirements as for the

floor finishes for the equivalent interior space, as specified in Section C16.

b. Surfaces Subject Only to Maintenance Foot Traffic: Not punctured by ordinary materials or tools when stepped on.

c. Substantiation:

1) Design Development: Proven-in-use products, or demonstration using tests appropriate to materials used, over same type of substrates as will be used in construction.

F. Operation and Maintenance:

1. Ease of Service:

a. All components of roofing (not just roof covering) easily accessible by maintenance persons on foot without the use of portable ladders or other portable devices.

b. Rooftop fixtures serviceable by simple replacement of parts, minimizing time required on roof, and eliminating need for repair work in the weather.

2. Ease of Repair:

a. Water Barrier Subject to Foot Traffic: Easily accessible for repair; if covered, covering will be removable by one person without the use of tools other than shovel and broom, with original covering materials replaceable to the same degree of coverage using the same tools.

3. Ease of Replacement: As specified in Section 111.

END OF SECTION B3

SECTION B31
ROOF COVERINGS

PERFORMANCE

A. Basic Function:

1. Provide a weather-resistive covering over the top side of the roof superstructure and any exposed floor superstructure.
2. Roof covering comprises all weather-resistive components, including the primary weather barrier, insulation, water collectors and conductors, wearing surfaces, trim and accessories, but not including roof opening elements or roof fixtures.
3. Where roof covering elements also must function as elements defined within another element group, meet requirements of both element groups.
4. In addition to the requirements of this section, the construction will comply with all applicable requirements of Section 111 - Facility Performance, Section B - Shell, and Section B3 - Roofing.

B. Amenity and Comfort:

1. Air Infiltration: If a joint-less or completely sealed-seam or welded-seam membrane-type water barrier is not used, provide auxiliary method of complying with air infiltration requirements of Section B.

C. Health and Safety:

1. Fire Retardance: ASTM E 108-2007a Class A roof covering, without the use of fire retardant treatment unless treatment is permanent.

D. Structure:

1. Roof Covering Substrate: Sufficiently rigid or dense to support water barrier in a manner that prevents puncture due to traffic on roof.
2. Wind Uplift: Where roof covering has a lower air transmission rate than the roof superstructure, provide means of preventing blow-off or ballooning due to low negative pressure over roof.
3. Provide cover board between insulation and membrane to resist moderate hail damage if membrane cannot inherently provide this protection.
4. For areas of the roof capable of supporting current or future photovoltaic panels:

   a. Provide roof capable of allowing a photovoltaic array to be installed without extensive modification, or repair of the roof during installation

   b. Roof to be capable of resisting snow and wind loading, and superimposed loading of a PV array dead load of 15 lbs per square foot, a uplift load of 40 lbs per square foot uplift at roof areas at least ten feet from roof edge, and an uplift load of 60 lbs per square foot within ten feet of roof edges.

   c. Designed roofing assembly shall include mounting points connecting the building structure to the PV panel structure with a thermal break (such as a pin and tube system with structural thermal-break infill).

E. Durability:

1. Life Span: As specified in Section B, and the following:
   a. Aesthetic Life Span: Significant degradation of appearance during the functional life span will not occur.
   b. Manufacturer Approval of Design: Where roof covering manufacturer recommends or requires certain design features for satisfactory performance or for warranty, with manufacturer's requirements.

c. Manufacturer Warranty:
   1) Materials: 20 years, minimum.
   2) Installation and Workmanship: 5 years, minimum.
d. Substantiation:
   1) Design Development: Material type and specification, expected functional life span, and manufacturer warranty available.
   2) Construction Documents: Quality assurance program to be implemented to ensure complete and correct installation of weather-barrier elements.
   3) Construction: Actual manufacturer warranty.

2. Water Penetration:
   a. Water Barrier Type: The construction will use a water barrier that is lapped for positive run-off, a monolithic joint-less membrane, or a membrane with sealed joints.
   b. Fasteners Penetrating Water Barrier: Prohibited, unless fasteners are located under overlapping material.

F. Operation and Maintenance:

1. Water Conductor Capacity: As required by code or SMACNA Architectural Sheet Metal Manual (ASMM), 2003, whichever is greater, based on 10 year 5 minute intensity.
   a. Substantiation:
      1) Design Development: Calculations of capacity.
      2) Construction: Water tests.

PRODUCTS

A. Essentially Flat Roofs:

1. Use one of the following:
   a. Elastomeric roofing membrane.
      1) Installed over insulation and fully-adhered.
   b. Modified bituminous roofing membrane.
      1) Installed over insulation and fully adhered.

2. Do not use:
   a. Pitch pans or pockets.
   b. Built-up bituminous roofing membrane.
   c. Fluid-applied roofing or waterproofing membrane.
   d. Loose-laid roofing membrane.

B. Sloped Roofs:

1. Use one of the following:
   a. Metal roofing of aluminum or factory-finished hot-dipped galvanized steel.

2. Do not use:
   a. Asphalt shingles.
   b. Wood shingles.
   c. Metal shingles.
   d. Slate shingles.
   e. Concrete tiles.
   f. Clay tiles.
   g. Mineral fiber-cement tiles.

END OF SECTION B31

SECTION B32
ROOF OPENINGS

PERFORMANCE

A. Basic Function:

1. All openings in the roof will be closed with elements that exclude unwelcome people, animals, and insects without requiring specific action by occupants, while shedding water and preventing uncontrolled water infiltration, withstanding anticipated loading conditions, providing required access, and permitting the entry of desirable natural light.

2. Roof opening elements include skylights, hatches, vents, and other elements necessary to close openings or elements associated with those openings.

3. Where roof opening elements also must function as elements defined within another element group, meet requirements of both element groups.

4. In addition to the requirements of this section, the construction will comply with all applicable requirements of Sections 111 - Facility Performance, Section B - Shell, and Section B3 - Roofing.

B. Amenity and Comfort:

1. Thermal Performance: As specified in Section B and the following:
   a. Maximum Thermal Transmittance of Skylights: Heating season U-value of 0.58 IP (3.29 SI) when tested in accordance with ASTM C 1363-2005.
   b. Exception to Condensation Resistance Requirement: For glazing and frames, minimum CRF of 35 when measured in accordance with AAMA 1503-1998.

2. Water Penetration - Skylights Only:
   a. No uncontrolled water penetration at static pressure of 2.86 psf (137 Pa) and 5.0 gal/sf/hr (3.4 L/sq m/min), when tested in accordance with ASTM E 331-2000.
   b. Substantiation: Static pressure test in accordance with ASTM E 331-2000; mock-up test performed for this project required.

3. Natural Light:
   a. Skylights will be used to accomplish natural lighting specified in Section B.

4. Convenience:
   a. Provide a fixed stair or ship's ladder leading to each hatch used for access to roof equipment or required by code.
   b. Access Hatches: Operable from outside, provided user unlocked from inside before exiting.

5. Appearance:
   a. Do not use screens below overhead glazing (for protection from falling glazing).
   b. Glazed elements will be designed and constructed so that condensation between panes is not visible from interior.

C. Health and Safety:

1. Fire Resistance of Elements Closing Openings: As required by code.

2. Flammability of Plastic Glazing: As required by code.

3. Heat and Smoke Vents in Roof: The construction will comply with the code.

4. Ladder Safety: Comply with ANSI A14.3-2002.

5. Physical Security:
   a. Operable Openings: No unlocking devices accessible from outside.
   b. Access Hatches: Forced entry resistance of Class I in accordance with ASTM F 1233-1998(R04),

minimum.

6. Skylights shall be outfitted with fall protection devices.

7. Continuous fall protection devices must be provided around all roof access points, skylights, and unless parapet walls are at least 42 inches tall, around perimeter of roof.

D. Structure:

1. Self-Supporting Elements: Same requirements as for superstructure.

2. Glass Design: Type, size, and thickness as required to comply with ASTM E 1300-2004 and AAMA GDSG-1, "Glass Design for Sloped Glazing", 1987, as applicable.

3. Structural Sealant Glazing Systems: Comply with ASTM C 1184-2005, including non-mandatory Appendix, and AAMA TSGG-2004 "Two-Sided Structural Glazing Guidelines for Aluminum Framed Skylights."

E. Durability:

1. Life Span:
   a. Sealed Double Glazing Seal Durability: Minimum 5 years.
      1) Substantiation: Manufacturer warranty.

2. Weather Resistance:
   a. Minor Instances of Glazing Not Used for View: Haze, light transmission, and color change limitations specified in Section B are waived.

3. Moisture in Unconditioned Attics and Similar Spaces: Unless a moisture-vapor-tight barrier is provided between attic and conditioned space, the construction will provide gravity exhaust with free area of 1.0 sq ft (0.1 sq m) for each 150 sq ft (14 sq m) of attic floor area.

F. Operation and Maintenance:

1. Cleaning: Skylights will be designed and installed to allow cleaning without the need for climbing or walking on either the structural members or the glazing, using cleaning tools with handles not longer than 10 feet (3 m).

2. Replacement: Glazed elements will be designed and installed so that glazing can be replaced from outside without need for scaffolding or other temporary supports inside the building.

END OF SECTION B32

SECTION B33
ROOF FIXTURES

PERFORMANCE

A. Basic Function:

1. Roof fixtures include all elements attached to the roof, except equipment and services. Fixtures provided will be those made necessary by the design and as defined in the project program
   a. Mounting brackets or frames for roof-mounted services and equipment and a minimum 100 kW photo-voltaic solar collector system; see applicable components for mounting requirements.
   b. Screens for concealment of services and equipment.

2. Where roof fixtures also have a function defined in another element group, design such elements as specified for that element group, in addition to the requirements specified in this section.

3. In addition to the requirements of this section, the construction will comply with all applicable requirements of Section 111 - Facility Performance, Section B - Shell, and Section B3 - Roofing.

B. Structure:

1. Mounting Brackets and Frames for Equipment and Services: Complying with design requirements for superstructure.

2. Screens: Complying with design requirements for exterior walls.

C. Durability:

1. Weather:
   a. Surface Finish: Minimum service life of 10 years without color deterioration, except for flags.
   b. Screens: Complying with durability requirements specified for exterior walls.

END OF SECTION B33

SECTION C
INTERIORS

PERFORMANCE

A. Basic Function:

1. Provide appropriately finished interiors for all spaces indicated in the program, equipped with interior fixtures as required to function properly for specific occupancies.

2. Interiors comprise the following assemblies:
   a. Interior Construction (C1): All elements necessary to subdivide and finish space enclosed within the shell, including applied interior surfaces of the exterior enclosure.
   b. Interior Fixtures (C2): All elements attached to interior construction that add functionality to enclosed spaces, except for elements classified as equipment or services fixtures.

3. Provide physical separation between spaces, constructed to achieve fire ratings required by code, appropriate security between adjacent spaces, and visual, acoustical, olfactory, and atmospheric isolation as necessary to maintain desirable conditions in each space.

4. Provide finishes for interior surfaces that are appropriate for the functions of each space.

5. Provide interior fixtures that are necessary for the proper functioning of each space.

6. Where interior elements also must function as elements defined within another element group, the construction will meet requirements of both element groups.

7. In addition to the requirements of this section, the construction will comply with all applicable requirements of Section 111 - Facility Performance.

B. Amenity and Comfort:

1. Natural Ventilation: Interiors will be designed and constructed to permit air movement between exterior openings positioned to enhance warm weather thermal comfort of occupants in all major spaces.

2. Access: Provide access to all primary interior spaces from Circulation spaces (SC Spaces) (no access to any primary interior space exclusively through another primary interior space).

3. View: Provide views to the building exterior or interior atria from most locations within primary interior spaces.

4. Natural Light:
   a. Daylighting: Provide ambient natural lighting in primary spaces that is of intensity adequate for essential tasks when measured on a typical overcast winter day in mid-afternoon.
   b. Visual Comfort: Provide ambient natural light in primary spaces that is free of excessive direct or reflected glare, as defined in IESNA RP-5, 1999, Recommended Practice of Daylighting.
   c. Daylight Control: Provide local devices to enable occupants to control brightness and glare from direct daylighting.
      1) Window treatments as specified in Section C23 will be used to comply with this requirement.
      2) Do not use window treatments that have only "fully open" and "fully closed" modes.
   d. Substantiation:
      1) Design Development: Engineering calculations for representative spaces, predicting anticipated daylighting levels under specified conditions.

5. Acoustical Performance:
   a. Background Noise: Provide interiors that maintain ambient sound levels within primary spaces at levels recommended in ASHRAE HVAC Applications Handbook, 2007, when adjacent spaces are occupied and are being used normally.

b. Impact Insulation: Provide floor-ceiling construction, including floor structure, floor finish, and ceiling finish, to produce a Field Impact Insulation Class (FIIC) value of 50, when tested in accordance with ASTM E 1007-2004.
c. Reverberation: Provide reverberation times in primary spaces for frequencies of 500-1000 Hz as follows:
   1) Conference Rooms: 0.9-1.1 seconds.
   2) Auditorium and Multipurpose Space: 1.5-1.8 seconds.
d. Articulation Index: Provide articulation index (AI) of not less than 0.05 when measured in accordance with ASTM E 1130-2002.
   1) Application: Open office areas where multiple work stations occur without intervening full-height partitions.
e. Provide particular attention to isolating high noise level areas like high bay lab and electronics lab from other areas of the building.
f. Substantiation:
   1) Preliminary Design: Engineering calculations for representative spaces, predicting acoustical conditions.
   2) Construction Documents: Engineering design calculations and drawings sealed by licensed acoustical engineer.

6. Odor Control: Prevent unpleasant odors generated within a space from affecting occupants of adjacent spaces, by providing physical isolation of the spaces, separate ventilation, or a combination of isolation and ventilation.

7. Appearance: Provide interiors that are pleasing in appearance and do not detract from the primary functions performed in each space.

8. Texture: Provide interior elements and surfaces that are textured appropriately for primary functions to be accommodated within each space.
   a. For surfaces that are within normal reach of occupants, the construction will provide textures that are safe for occupants and require minimum maintenance.
   b. For surfaces that are not within normal reach of occupants, the construction will provide textures that are comparable to those within normal reach.

C. Health and Safety:

1. Egress: Provide egress from all interior spaces in accordance with code.

2. Fire Resistance: Provide fire resistance in accordance with code.
   a. Minimum performance values for individual interior elements are also specified in other Sections.
   b. Substantiation:
      1) Design Development: Identification of assemblies required to have fire resistance rating and method to be used to achieve rating.
      2) Construction Documents: Identifying numbers placed on the construction drawings.

D. Structure:

1. Structural Performance: The construction will provide interior construction and fixtures to support without damage all loads required by code.
   a. Special Loads: In addition to loads defined by code, the construction will provide for adequate support of wall-mounted or ceiling-mounted furnishings and equipment in spaces where such equipment is required by program or is likely to be installed after construction because of intended function.
   b. Substantiation:
      1) Design Development: Detailed listing of design criteria and preliminary analysis, prepared by a licensed structural engineer.
      2) Construction Documents: Detailed design analysis by licensed structural engineer.

E. Durability:

1. Service Life Span: Same as building service life, except as follows:
   a. Interior Doors and Other Operable Elements: Minimum 15 years functional and aesthetic service life.
   b. Interior Ceiling Finishes: Minimum 15 years functional and aesthetic service life; including suspended ceilings.
   c. Interior Wall and Floor Finishes: Minimum 10 years functional and aesthetic service life.
   d. Other Interior Construction: Minimum 15 years functional and aesthetic service life.

2. Wear Resistance: The construction will provide interior construction and fixtures that are suitable in durability for the degree and type of traffic to be anticipated in each space.

F. Operation and Maintenance:

1. Cleaning: Provide interior construction and fixtures that will not be damaged by ordinary cleaning and maintenance operations.

END OF SECTION C

SECTION C1
INTERIOR CONSTRUCTION

PERFORMANCE

A. Basic Function:

1. Provide physical separation between spaces required by the program, constructed to achieve fire ratings required by code, appropriate security between adjacent spaces, and visual, acoustical, olfactory, and atmospheric isolation as necessary to maintain desirable conditions in each space.

2. Provide appropriately finished interiors for all spaces required by the program.

3. Interior construction comprises the following elements:
   a. Partitions (C11): All types of space dividers, including demountable and operable partitions.
   b. Interior Doors (C12): All interior doors, including hardware and frames, except for elevator doors.
   c. Interior Windows (C13): All interior fixed and operable windows, including frames and casings.
   d. Other Interior Openings (C14): Interior utility openings such as hatches and access panels, louvers and vents.
   e. Stairs and Ramps (C15): Those interior and exterior stair and ramp elements not a part of superstructure or exterior enclosure.
   f. Interior Finishes (C16): All functional and decorative applied interior finishes, including secondary support structures.

4. Where interior construction elements also must function as elements defined within another element group, meet requirements of both element groups.

5. In addition to the requirements of this section, comply with all applicable requirements of Section 111 - Facility Performance and Section C - Interiors.

B. Amenity and Comfort:

1. Airborne Sound Isolation: Achieve the following minimum noise isolation class (NIC) values between adjacent spaces, when tested in accordance with ASTM E 336-2005 and classified in accordance with ASTM E 413-2004, based on NC values specified in Section C:
   a. Spaces of Like Function and Similar NC Value: NIC 36.
   b. Quiet Space (NC Values of 20-30) and Moderately Noisy Space (NC Values of 30-40): NIC 39.
   c. Quiet Space (NC Values of 20-30) and Noisy Space (NC Values of 40-50): NIC 42.
   d. Substantiation:
      1) Design Development: Drawings indicating proven-in-use STC values for construction separating primary spaces and separating primary spaces from noise sources such as mechanical equipment.
      2) Construction Documents: Proven-in-use or proven-by-mock-up data substantiating STC values.
      3) Construction: Field tests of representative construction, conducted after all systems are in operation.

2. Cross Ventilation: The construction will provide interior construction to facilitate natural cross ventilation required in Section B.

C. Health and Safety:

1. Fire Resistance: Achieve fire resistance required by code, except for the following elements, which are in excess of code:
   a. Substantiation:
      1) Design Development: Identification of assemblies required to have fire resistance rating and method to be used to achieve rating.
      2) Construction Documents: Identifying numbers on the construction drawings.

2. Safety: Protect building occupants in accordance with code and the following:
   a. Heights: Protect building occupants from falling from elevated interior walkways.
   b. Tripping: The construction will protect building occupants from tripping hazards due to uneven floor surfaces or abrupt changes in floor elevation of more than 1/8 inch (3.2 mm).
   c. Minimum performance values for individual interior construction elements are specified in other Sections.

3. Security: At interior construction separating tenants from public circulation spaces, provide materials and systems with the same performance characteristics as specified for exterior enclosure in Section B2, except for requirements related to weathering.

D. Structure:

1. Structural Performance: No requirements in addition to those specified in Section C.

E. Durability:

1. Dimensional Stability: At interior spaces exposed to high humidity, such as swimming pool enclosures, provide interior construction that will withstand continuous or intermittent exposure without significant changes in dimension.
   a. Substantiation:
      1) Preliminary Design: Identification of primary materials intended for use in these spaces.
      2) Construction Documents: Details of critical conditions.

F. Operation and Maintenance:

1. Cleaning: At toilet rooms, shower rooms, trash collection rooms, and janitorial closets, provide interior construction that will allow harsh chemical cleaning without damage.
   a. Substantiation:
      1) Preliminary Design: Identification of primary materials intended for use in these spaces.
      2) Construction Documents: Details of critical conditions.

PRODUCTS

A. Construct using the following:

1. Gypsum wallboard on metal framing as typical.

2. CMU construction where durability and damage resistance is a requirement.

END OF SECTION C1

SECTION C11
PARTITIONS

PERFORMANCE

A. Basic Function:

1. Provide physical separation between spaces included in the program, constructed to achieve fire ratings required by code, appropriate security between adjacent spaces, and visual, acoustical, olfactory, and atmospheric isolation as necessary to maintain desirable conditions in each space.

2. Partitions comprise the following elements:
   a. Fixed Partitions: Solid, stationary space dividers that are opaque and extend full height.
   b. Partial Height Partitions: Fixed, solid, opaque visual barriers, including toilet compartments.
   c. Operable Partitions: Movable barriers that form solid, visual and acoustical subdivisions of a space.

3. Where partition elements also must function as elements defined within another element group, meet requirements of both element groups.

4. In addition to requirements specified in this section, comply with all applicable requirements of Section 111 - Facility Performance, Section C - Interiors, and Section C1 - Interior Construction.

B. Amenity and Comfort:

1. Thermal Performance: Where adjacent spaces have differential required temperatures in excess of 10 degrees F (5.6 degrees C), provide minimum U-value of 0.61 Btu/sq ft/hr/deg F (3.46 W/sq m K).

2. Light: Provide transparent or translucent fixed partitions or interior windows where required to meet natural lighting objectives specified in Section C.

3. Exterior View: At primary interior spaces without access to exterior windows, provide transparent fixed partitions or transparent interior windows that permit occupants to borrow light and view from adjoining spaces.

4. Interior View: At interior commercial spaces adjacent to public circulation, provide transparent fixed partitions or transparent interior windows to permit views of sales displays.

5. Visual Privacy: The construction will provide fixed, full-height partitions at toilet rooms and dressing rooms that afford visual privacy between adjacent stalls.

6. Acoustical Isolation:
   a. Fixed Partitions: provide in-place FSTC values not less than NIC values required for interior construction in Section C1, when tested in accordance with ASTM E 336-2005 and classified in accordance with ASTM E 413-2004.

7. Appearance:
   a. Provide partitions that are smooth in texture at all circulation routes (SC spaces).
   b. Provide operable partitions that are compatible in appearance with fixed partitions in the same space, employing similar materials, colors, and textures.
   c. Partitions meeting exterior walls at right angles shall occur where the exterior wall is solid or at a window mullion. Doglegs or offsets in partitions shall be avoided.

C. Health and Safety:

1. Fire Resistance: Provide fire ratings as required by code, except for the following, which may be in excess of those required by code:
   a. Fire Area Separation Walls: 2 hours.
   b. Stairway Enclosures: 2 hours.
   c. Walls surrounding labs and separating labs from office areas: Minimum 1 hour (or more stringent

if required by code).

2. Prepared openings shall be provided between the service corridor and the lab areas and in any area where it's anticipated that research activities will regularly require passing cabling, tubing, piping, etc. through walls. The opening shall be finished and contain listed fire blocks, pillows, or pads that will maintain the integrity of the fire separation while still allowing tubing, cables and other conduit to be passed through the wall.

3. Sanitation: At spaces used for food preparation, provide smooth, impervious, and water-resistant partition surfaces and integral coved base that will allow chemical cleaning and sterilization without damage.

D. Structure:

1. Lintels: Constructed to span openings in partitions and support imposed loads with maximum deflection vertically and horizontally of 1/360 of span.

2. Vertical Loads: Provide partitions with sufficient strength to withstand anticipated vertical loads for wall-mounted handrails, equipment, and furnishings without excessive deflection or structural damage.
   a. Partial Height Partitions: Withstand point load of 200 lbf (890 N) applied every 2 feet (610 m) to top of partition.

3. Horizontal Loads: Provide partitions with sufficient strength and rigidity to withstand anticipated horizontal loading conditions without excessive deflection or structural damage.
   a. Fixed Partitions: Withstand loading of 5 psf (239 Pa) with maximum deflection of L/120, per ASTM E 72-2005.
   b. Elevator Shaft Wall Partitions: Withstand intermittent air pressure loads of 5 psf (239 kPa) with maximum deflection of L/120, per ASTM E 72-2005.
   c. Air Shaft Partitions: Withstand sustained air pressure loads of 10 psf (479 kPa) with maximum deflection of L/120 per ASTM E 72-2005.
   d. Partial Height Partitions: Withstand concentrated load of 200 lbf (890 N) applied over not more than 10 sq in (6400 sq mm) anywhere on partition surface.

4. Railings: The construction will provide railings with sufficient strength and rigidity to withstand the following loads:
   a. Concentrated load of 200 lbf (890 N) applied in any direction.
   b. Uniform load of 50 lbf/ft (222 N/m) applied in any direction.

PRODUCTS

A. Fixed Partitions:

1. Construct using the following:
   a. Concrete masonry units at elevator shafts and core mechanical and electrical rooms.
   b. Gypsum board on metal framing as typical.

END OF SECTION C11

SECTION C12
INTERIOR DOORS

PERFORMANCE

A. Basic Function:

1. Equip all openings in partitions that function to allow passage of people, vehicles, and goods, so that openings can be closed and secured when not in use, using components as specified.

2. The elements comprising interior doors include doors of all sizes and uses, gates, and elements that form or complete the openings, unless an integral part of another element.

3. Where interior door elements also must function as elements defined within another element group, meet requirements of both element groups; interior doors function as partition elements when doors are closed.

4. In addition to the requirements of this section, the construction will comply with all applicable requirements of Section 111 - Facility Performance, Section C - Interiors, and Section C1 - Interior Construction.

B. Amenity and Comfort:

1. Acoustical Performance:
   a. Provide in-place FSTC values for partitions with interior doors that are not less than NIC values specified for interior construction in Section C1.

2. Convenience:
   a. Dimensions: Provide interior doors that are sized appropriately for people, vehicles, and goods likely to move between adjacent spaces.
   b. Height: Not less than 96 inches (2438 mm) in height.
   c. Width: Not less than 36 inches (915 mm) in width, except for doors to shallow closets. Doors into labs shall be a minimum of 42 inches wide leafs. As an alternate, a pair of doors can be used, active leaf 36 inches and inactive leaf 24 inches.
   d. Closing Devices: Not required unless specifically indicated or required by code; smooth closing motion, with slower latching speed than closing speed (no slamming).

3. Appearance:
   a. Provide interior doors coordinated with adjacent wall surfaces, using similar materials, colors, and textures.
   b. Provide lab doors swinging in direction of exit and shall include view lights.

C. Health and Safety:

1. Fire Safety: Door openings in fire-rated walls and partitions will be protected in accordance with the code and the following:
   a. Hold-Open Function: At locations indicated in program; any method that allows the door to swing freely and that automatically closes door upon detection of local fire or smoke.
   b. Closers: Sufficient closing force to close and latch door despite drafts and wind, but not more than that specified by code.

2. Emergency Egress: Where doors must be latched or locked, comply with the code and the following:
   a. Exceptions in the code waiving requirements for panic hardware or egress without the use of a key, under conditions that a sign stating that "This door must remain unlocked during business hours" is posted, will not be used.
   b. Locking Devices Requiring a Key for Egress: Not allowed.
   c. Exit Doors Having Occupant Load of 50 or More (Regardless of Occupancy): Exit hardware will be provided that releases the locking/latching mechanism upon the application of a force in the

direction of egress travel.
1) Substantiation: Tested by independent agency acceptable to local authorities.

3. Physical Security:
   a. Locks: Each room door will be secured using a keyed lockset that allows exit from inside using only one motion.
      1) Exceptions:
         a) The following will not have any locking feature at all:
            (1) Doors into stairwells.
            (2) Doors across corridors (i.e. interrupting the length of corridors for fire, smoke, or privacy reasons).
            (3) Doors to restrooms, shower rooms, locker rooms, kitchens, and laundry rooms.
         b) The following may have privacy lock function (without key):
            (1) Doors to bathrooms, water closet compartments, shower compartments, or single person restrooms.
      2) Keys: As specified in Section B23.
         a) Key-making Restrictions: Key blanks and key-making restricted to NREL.
      3) Locking Functions: Appropriate to the space location and function and as follows:
         a) Exterior Doors: See Section B23.
         b) Occupant Work Spaces: Office.
         c) Equipment Utilization Spaces: Store room.
         d) Meeting and Instruction Spaces Intended for One Occupant: Office.
         e) Meeting and Instruction Spaces for More Than One Occupant: Office.
         f) Occupant Service Spaces: One occupant: Privacy; more than one occupant: No locking.
         g) Storage Spaces: Always-Locked.
         h) Building Services Spaces: Always-Locked.
         i) Utility Equipment Spaces: Always-Locked.
         j) Laboratories: Always-Locked.
   b. Lock Function Definitions: As described in ANSI/BHMA A156.2-2003 (F36-F48, F75-F94, F107 F109), A156.3-2001 ("X" prefix), A156.5-2001 ("E" prefix), A156.12-2005 (F95-F106), and A156.13-2005 (F01-F25); type of lock required may also be governed by other criteria.
      1) Always-Locked: F86.
      2) Classroom: F84.
      3) Exit Only: F13, with no outside trim, no thumb turn or other unlocking feature inside, no holdback or dogging.
      4) Office: F82 Grade 1, operation of key unlocks outside handle.
      5) Privacy: F76 Grade 1.
   c. Forced Entry: Doors indicated in program capable of resisting forced entry equivalent to:
      1) Swinging Doors: ASTM F 476-1984(R02) Grade 10.
      2) Sliding Doors: ASTM F 842-2004 Grade 10.
      3) Locks and Lock Cylinders: ANSI/BHMA A156.5-2001 Security Grade 1.
   d. Glazing in Doors: The construction will comply with requirements for safety glazing, security, and forced entry specified in Sections C and C1.

D. Structure:

1. Door Frames: Constructed to span door opening with maximum deflection vertically and horizontally of 1/360 of span.

E. Durability:

1. Wear Resistance:
   a. Door Surfaces: Scuff-resistant in areas where foot impact is likely; highly scratch-resistant in areas where hand contact is likely; applied protective surfaces for vulnerable areas are acceptable.

b. Door Handles and Knobs: Highly scratch-resistant and of finish that will minimize appearance changes due to wear; satin or brushed finish and no plated or coated finishes.

2. Flexible Seal Materials: Minimize deterioration due to operation of doors and aging.

3. Swinging Doors: Control door swing to prevent damage due to impact, to either door or element impacted.

F. Operation and Maintenance:

1. Ease of Use and Repair: Doors will be easy to use by occupants, easy to repair or service, and with operating components easy to replace.

2. Life Span of Operating Components: Remaining operable for 10 years under normal exposure conditions for the project site.

PRODUCTS

A. Interior Pedestrian Doors:

1. Use one of the following:
   a. Hollow steel doors and frames.
   b. Flush wood doors.
   c. Glazed aluminum doors.

2. Do not use:
   a. Knock-down hollow metal frames.

B. Glazing in Doors: Glass and plastic.

1. Use one of the following:
   a. Fully tempered glass.

C. Hardware for Swinging Doors:

1. Match the existing hardware keyway on campus. Existing campus standard is Best 9K, Grade 1 mortise locks.

2. Use satin, chrome or stainless steel finish.

3. Use fire rated hardware on fire rated doors.

4. Hinges: Ball-bearing butt hinges or continuous hinges.

5. Exit Devices: Unless specifically indicated as one type, mortise type or concealed vertical rod type.

6. Locksets: Unless specifically indicated as one type, mortise.
   a. Doors will not use rim type auxiliary locks, lock combinations requiring two hands for operation, interconnected locks, or bored (cylindrical locks).

7. Door Closers: Unless specifically indicated as one type, surface overhead frame-mounted type, surface overhead door-mounted type, in-the-floor mounted type, concealed overhead frame-mounted type, or concealed overhead door-mounted type.
   a. Doors will not use concealed overhead type, floor mounted type, or spring hinges.

8. Door Stops: Unless specifically indicated as one type, floor-mounted type, wall-mounted type, or overhead door/frame mounted type.

9. Door Hold-Opens: Unless specifically indicated as one type, floor-mounted type, wall-mounted type, or overhead door/frame mounted type.

10. Doors will not use floor-mounted type, wall-mounted type, overhead-mounted type, hold-open feature

in closer alone without a separate stop or magnetic hold-open type.

11. All door hardware shall be compatible with NREL keyway system provided by Oak Security Systems.
12. All doors normally unlocked by a card key system shall remain locked in the event of power loss, but life safety egress shall not be impeded.

D. The construction will not use:

1. Different metals subject to galvanic action in direct contact with each other.
2. Aluminum in direct contact with concrete or cementitious materials.

END OF SECTION C12

SECTION C13
INTERIOR WINDOWS

PERFORMANCE

A. Basic Function:

1. Provide interior windows between adjacent spaces where required by the program or where proper functioning of adjacent spaces requires limited visual or physical connection between them.

2. Interior windows comprise the following elements:
   a. Fixed windows, but excluding glazed partitions.
   b. Window alcoves.

3. Where interior windows are integral with elements defined within another element group, meet requirements of both element groups. Fixed interior windows and operable interior windows, when closed, function as partition elements and will not degrade performance of partitions below the levels specified.

4. In addition to requirements specified in this section, the construction will comply with all applicable requirements of Section 111 - Facility Performance, Section C - Interiors, and Section C1 - Interior Construction.

B. Amenity and Comfort:

1. Light: Provide interior windows or fixed partitions that are transparent or translucent where required to meet natural lighting objectives specified in Section C.

2. Exterior View: At primary interior spaces without access to exterior windows, provide interior windows or transparent fixed partitions that permit occupants to borrow light and view from adjoining spaces.

3. Interior View: At interior commercial spaces adjacent to public circulation, provide interior windows or transparent fixed partitions to permit views of sales displays.

4. Convenience:
   a. Dimensions: Provide operable interior windows that are sized appropriately for objects, materials, and services likely to be transferred between adjacent spaces.

5. Appearance:
   a. Compatibility: Provide interior windows that are compatible in appearance with exterior windows in the same space, employing similar materials, colors, and textures.
   b. Sight Lines: Provide maximum glazing area with minimum interruption by framing members.
   c. Frames: Designed and constructed to give a flush appearance with minimal shadow lines.

C. Health and Safety:

1. Fire Resistance: Provide window rating as required to maintain fire resistance rating of partitions in which they occur.

D. Structure:

1. Lintels: Constructed to span openings and support loads imposed by partition, with maximum deflection of 1/360 of span, vertically and horizontally.

E. Durability:

1. Physical Endurance: At operable interior windows, materials will be designed and selected and window operation that will withstand not less than 15 years of normal operation without requiring replacement of any parts.

PRODUCTS

A. Interior Windows (Fixed):

1. Window Operation: Use one of the following:
   a. Fixed non-operable windows.
2. Glazing: Single pane glazing.
3. One of the following will be used:
   a. Metal windows at fire rated openings.
   b. Aluminum or metal windows at non-fire rated openings.

END OF SECTION C13

SECTION C14
OTHER INTERIOR OPENINGS

PERFORMANCE

A. Basic Function:

1. Provide interior openings between adjacent spaces when required for air movement, louvered where required for visual privacy, baffled where required for acoustical isolation and equipped with automatic fire dampers where separations are fire-rated.

2. Provide interior openings where required for maintenance access to mechanical services and other concealed systems, designed to be as unobtrusive as possible.

3. Provide covers for interior expansion joints that protect joints from debris and provide safe and durable support for anticipated traffic.

4. Other interior openings comprise the following elements:
   a. Louvers and vents.
   b. Access doors and panels.
   c. Elements forming or completing interior openings, including sills, jambs, heads, and operating hardware.

5. Where other interior openings are integral with elements defined within another element group, meet requirements of both element groups. Interior openings between adjacent spaces will not degrade performance of partitions and other interior construction elements below the levels specified.

6. In addition to requirements of this section, comply with all applicable requirements of Section 111 - Facility Performance, Section C - Interiors, and Section C1 - Interior Construction.

B. Amenity and Comfort:

1. Air Movement: Provide properly sized and located interior openings where required for natural ventilation specified in Section C.
   a. Include method for restricting or eliminating air movement at occupant's option.
   b. Include method for adjusting and directing air flow while maintaining visual privacy.

2. Visual Privacy: Where air movement is required between adjacent spaces, provide interior openings equipped with sightproof louvers where required for protection of visual privacy.

3. Convenience:
   a. Dimensions: Provide access panels and hatches that are sized appropriately for access to services, and utilities concealed by other construction.

4. Appearance:
   a. Compatibility: Provide access panels, hatches, and louvers that are compatible in appearance with the finished surfaces in which they are installed, employing similar colors, and textures.
   b. Contrast: Provide expansion joint covers that contrast sharply in material, color, and texture with the finished surfaces in which they are installed.
   c. Frames: Frames will be designed and constructed to give a flush appearance.

C. Health and Safety:

1. Fire Resistance of Elements Closing Openings: As required by code.

2. Tripping Hazard: Provide floor expansion joint covers and floor hatches that are flush with finished floor surface or lapped not more than 1/4 inch (6.4 mm) above finished surface with tapered edges to present minimal tripping hazard.

D. Structure:

1. Floor Hatches in Pedestrian Areas: Provide floor hatches for interior floors capable of supporting minimum live load of 150 psf (72 kPa) without permanent deflection.

END OF SECTION C14

SECTION C15
STAIRS

PERFORMANCE

A. Basic Function:

1. Provide interior stairs, ramps, and fire escapes as necessary for access to and egress from all occupied spaces required by the program, in compliance with code and as follows:
   a. Additional Stairs: In addition to stairs required by code, provide open interior stairs connecting these related functions: common areas near main lobby.

2. Stairs comprise the following elements:
   a. Structure supporting stairs, unless an integral part of superstructure.
   b. Tread and riser construction, unless an integral part of superstructure.
   c. Railings for interior stairs.
   d. Integral stair finishes.

3. Where stairs are integral with elements defined within another element group, meet requirements of both element groups.

4. In addition to requirements of this section, comply with all applicable requirements of Section 111 - Facility Performance, Section C - Interiors, and Section C1 - Interior Construction.

5. Roof access shall be provided using extension of not less than one stair tower to the roof level. Ladders and ship's ladders to access roof level are not permitted.

B. Amenity and Comfort:

1. Air Movement: Enclosed stairs will be constructed to prevent chimney effect when stairs are in normal (non-emergency) use.

2. Acoustical Isolation: Enclosed stairs will be constructed to provide a Noise Isolation Class (NIC) rating of 42 between stair enclosure and any primary space adjacent to stairway, when tested in accordance with ASTM E 336-2005 and classified in accordance with ASTM E 413-2004.

3. Stair Comfort:
   a. Stair Steepness: Provide stairs with risers of not more than 7 inches (178 mm) and treads sized so that twice the riser height plus the tread depth totals 24 to 25 inches (610 to 635 mm).
   b. Landings: Provide stairs with maximum rise of not more than 10 ft (3.0 m) between landings.

4. Appearance of Enclosed Stairs: Constructed to present a moderately finished appearance.

5. Appearance of Exterior Stairs: Constructed to present a moderately finished appearance.

6. Appearance of Non-Egress Monumental Stairs: Constructed to present a highly finished appearance and with the following characteristics:

C. Health and Safety:

1. Safety of Stairs:
   a. Slip Resistance: Construct so that treads have a minimum static coefficient of friction of 0.80, measured in accordance with ASTM D 2047-2004.
   b. Risers: Construct with closed risers.
   c. Treads: Construct with treads that have a maximum bevel or radius on leading edge of 1/2 inch (12.8 mm).
   d. Guards or Guardrails: Construct so that there are no openings in guards or guardrails required by code that are large enough for a sphere with a diameter of 4 inches (102 mm) to pass through.
   e. Winders: Construct without winders, even if permitted by code.
   f. Spiral Stairs: Do not employ spiral stairs, even if permitted by code.

g. Circular Stairs: Do not employ circular stairs, even if permitted by code.

2. Fire Resistance: Construct of noncombustible materials, including handrails.

D. Structural:

1. Interior Stairs and Ramps: Provide stairways, ramps, platforms, and landings capable of supporting loads in excess of those required by code, as follows:
   a. Live Load: Minimum 150 psf (72 kPa).
   b. Concentrated Load: Minimum 400 pounds (1779 N) at any point.

2. Exterior Stairs and Ramps: Provide stairways, ramps, platforms, and landings capable of supporting loads in excess of those required by code, as follows:
   a. Live Load: Minimum 150 psf (72 kPa).
   b. Concentrated Load: Minimum 400 pounds (1779 N) at any point.

3. Handrails and Guardrails: Provide handrail and guardrail assemblies capable of resisting forces in excess of those required by code, as follows:
   a. Uniform Load: Minimum 60 lb/ft (0.88 kN/m) applied in any direction at the top.
   b. Concentrated Load: Minimum 250 pounds (1112 N) applied in any direction at any point along the top.
   c. Normal Load to Intermediate Rails or Guard: Minimum 60 pounds (267 N) horizontally applied to area of not more than 1 foot square (305 mm square).

END OF SECTION C15

SECTION C16
INTERIOR FINISHES

PERFORMANCE

A. Basic Function:
   1. Provide appropriately finished interiors for all spaces required by the program.
   2. Interior finishes comprise the following elements:
      a. Wall finishes, including those applied to the interior face of exterior walls and to the vertical faces of superstructure elements.
      b. Floor finishes, except for access floors.
      c. Suspended ceilings and soffits.
      d. Applied ceiling finishes.
      e. Stair finishes, except for integral stair surfaces.
      f. Finishes applied to other interior surfaces.
   3. Where interior finishes are integral with elements defined within another element group, meet requirements of both element groups.
   4. In addition to the requirements of this section, the construction will comply with all applicable requirements of Section 111 - Facility Performance, Section C - Interiors, and Section C1 - Interior Construction.

B. Amenity and Comfort:
   1. Thermal Performance:
      a. Interior Wall Finishes at Exterior Walls: Provide vapor permeance of 1 perm (57 ng/Pa/s/sq m) maximum when tested in accordance with ASTM E 96/E 96M-2005.
      b. Interior Ceiling Finishes at Roof Level: Provide vapor permeance of 1 perm (57 ng/Pa/s/sq m) maximum when tested in accordance with ASTM E 96/E 96M-2005.
   2. Reflectivity:
      a. Glare: Provide interior finishes that will not result in discomfort glare due to excessive contrast with light sources.
         1) Ceiling Surfaces: Not less than 80 percent reflectivity, when measured in accordance with ASTM E 1477-1998a (Re-approved 2003).
         2) Wall Surfaces: Not less than 50 percent reflectivity.
         3) Floor Surfaces: Not less than 30 percent reflectivity.
   3. Acoustical Performance:
      a. Sound Absorption: Provide acoustical absorption within interior spaces to achieve reverberation times within the limits specified in Section C - Interiors.
      b. Articulation Class: For open office areas, provide ceiling and wall finishes that have been tested in accordance with ASTM E 1111-2005 to provide Articulation Class (AC) values not less than 150.
      c. Sound Isolation: In areas where interior partitions stop at the ceiling and a plenum space extends above, provide ceilings tested in accordance with ASTM E 1414-2006 and classified in accordance with ASTM E 413-2004 to provide minimum Ceiling Attenuation Class (CAC) values as follows:
         1) Similar Functions and NC Levels on Both Sides of Partition: CAC 40.
         2) Quiet Space (NC 20-30) Separated From Moderately Noisy Space (NC 30-40): CAC 45.
         3) Quiet Space (NC 20-30) Separated From Noisy Space (NC 40-50): CAC 50.
         4) Quiet Space (NC 20-30) Separated From Very Noisy Space (NC 50-60): CAC 55.
         5) Moderately Noisy Space (NC 30-40) Separated From Noisy Space (NC 40-50): CAC 45.
         6) Moderately Noisy Space (NC 30-40) Separated From Very Noisy Space (NC 50-60): CAC 50.
         7) Noisy Space (NC 40-50) and Very Noisy Space (NC 50-60): CAC 45.
   4. Cleanliness:
      a. For break rooms, provide wall, ceiling, and floor surfaces that are USDA approved.
      b. For spaces such as laboratories and toilet rooms, the construction will provide wall, ceiling, and

floor surfaces that are inherently resistant to moisture and that can be cleaned by caustic agents without damage.

C. Health and Safety:
   1. Slip Resistance: For spaces subject to floor wetting, including entry lobbies, provide floor finishes with inherent slip resistance under wet conditions.
      a. At building entries, provide means for reducing or minimizing moisture and debris on shoe soles.
      b. At spaces such as laboratories and toilets, provide floor surfaces with minimum static coefficient of friction of 0.60 when wet, measured in accordance with ASTM C 1028-2006 or ASTM D 2047-2004.
   2. Slip Resistance: At stairs and corridors, provide floor finishes with minimum static coefficient of friction of 0.60, measured in accordance with ASTM D 2047-2004.
   3. Slip Resistance: At ramps, showers, and sloped floor surfaces, provide floor finishes with minimum static coefficient of friction of 0.80, measured in accordance with ASTM D 2047-2004.
   4. Tactile Warning Surfaces: Provide floor surfaces that comply with ADAAG-1994 detectable warning requirements at potentially hazardous locations, including top and bottom of stairs, top and bottom of escalators, top and bottom of ramps, and edge of loading dock.
   5. Static Resistance: At laboratories, provide floor finishes with conductivity between 25 kiloohms and 1.0 megaohms, in compliance with NFPA 99-2005.
   6. Static Generation: At computer installations and laboratories with electronic equipment, provide floor finishes that generate less than 2.0 kV at 20 percent relative humidity, when tested in accordance with AATCC 134-2006 using step and scuff tests with Neolite and leather soles.
   7. Antimicrobial Properties: At laboratories, provide wall surfaces that will not support mold, mildew, or bacterial growth.
      a. Provide floor materials that are heat-welded sheets or fluid applied to provide seamless surfaces.
      b. For carpeted areas, not less than 2 mm halo of inhibition for staphylococcus aureus, when tested in accordance with AATCC 174-1998.
   8. Flammability (comply as follows, or as indicated in NFPA 101 if more stringent):
      a. Ceilings in Exits and Corridors: Provide ceilings with ratings not greater than the following, when tested in accordance with ASTM E 84-2007:
         1) Flame Spread: 25.
         2) Smoke Developed: 450.
      b. Walls in Exits and Corridors: Provide wall surfaces with ratings not greater than the following, when tested in accordance with ASTM E 84-2007:
         1) Flame Spread: 25.
         2) Smoke Developed: 450.
      c. Floors in Exits and Corridors: Provide floor surfaces with ratings not greater than the following:
         1) Critical Radiant Flux of 0.45 W/sq. cm, per ASTM E 648-2006a.
         2) Smoke Density: 450 or less specific optical density, per ASTM E 662-2006.
      d. Ceilings in Primary Spaces: Provide ceilings with ratings not greater than the following, when tested in accordance with ASTM E 84-2007:
         1) Flame Spread: 25.
         2) Smoke Developed: 450.
      e. Walls in Primary Spaces: Provide wall surfaces with ratings not greater than the following, when tested in accordance with ASTM E 84-2007:
         1) Flame Spread: 25.
         2) Smoke Developed: 450.
      f. Floors in Primary Spaces: Provide floor surfaces with ratings not greater than the following:
         1) Critical Radiant Flux of 0.45 W/sq. cm, per ASTM E 648-2006a.
         2) Smoke Density: 450 or less specific optical density, per ASTM E 662-2006.

D. Structure:
   1. Floor Loading: Provide floor finishes that are capable of withstanding static loading of 125 psi (862 kPa)

without permanent deformation.

E. Durability:

1. Wall Finishes: Provide integral or applied wall surfaces that are appropriate for anticipated usage and traffic, offering durability not less than would be provided by applied wall coverings as follows, classified in accordance with ASTM F 793-2007:
   a. Occupant Work: Category IV- Type I Commercial Serviceability.
   b. Storage Rooms: Category IV- Type I Commercial Serviceability.
   c. Corridors: Category VI- Type III Commercial Serviceability.SC2 Lobbies:
   d. Stairs: Category V- Type II Commercial Serviceability.
   e. Maintenance Facilities: Category V- Type II Commercial Serviceability.
   f. Utility Equipment Rooms: Category V- Type II Commercial Serviceability.

2. Interior Wall Finishes at Exterior Walls: Provide surfaces that will not be damaged by incidental condensation from windows.

3. Wall Protection: In corridors, mail rooms, and freight receiving rooms, the construction will provide impact resistant wall bumpers, and corner guards or wall surfaces that are inherently resistant to impact damage due to rolling carts, gurneys, and hand trucks.

4. Opening Protection: At partition openings intended to accommodate pedestrian or vehicular traffic, provide protection of opening edges in the form of door frames (cased openings), or corner guards.

5. Flooring: Provide floor finishes that are appropriate for anticipated usage and traffic in each area, based on a 20 year replacement cycle.
   a. Substantiation:
      1) Design Development: In addition to items of proven-in-use substantiation specified in Section 111, provide, for minimum of 3 existing applications, date of installation of floor covering; maintenance, repair, and replacement history; recommended inspection and maintenance program; detailed evaluation of similarities and differences of historical application from proposed application; estimated life span of similar assembly if constructed today.

PRODUCTS

A. Construct using the following materials and systems:
   1. Lab floors may be sealed concrete, seamless vinyl, or resinous epoxy, but must be acid resistant.

B. Do not use:
   1. Vinyl-coated fabric wall covering.

END OF SECTION C16

SECTION C19
OTHER INTERIOR CONSTRUCTION

PERFORMANCE

A. Basic Function: Access flooring is highly desirable in certain areas, including High Performance Computing Data Center and throughout office area to aid in energy efficient HVAC design.

1. Under Floor Air distribution systems shall comply with the following requirements:

   a. The underfloor plenum shall operate at the minimumpressure necessary for satisfactory operation of the air distribution system while minimizing air leakage.

   b. There are two types of air leakage. Category 1 Leakage is from walls, conduit, junction boxes, slab penetrations and similar construction quality leakage paths to other portions of the building or return air path. Catetory 2 Leakage is floor leakage directly into the occupied zone, such as floor panel seams, floor boxes and diffuser leakage. The maximum allowable rate of Category 1 Leakage is 10% and the maximum allowable rate of Category 2 Leakage is 10% (20% maximum total leakage).

2. Substantiation:

   a. Design Development: Provide design details of the plenum, access floor and penetrations. Identify leakage paths and sealing methods.

   b. Construction: Provide mock-up of an area of approximately 1,000 sq. ft. with the expected penetrations, wall sealing, and other Category 1 and 2 leakage paths expected. Confirm leakage rates within the allowable range.

B. Amenity and Comfort: Provide system with solid feel under foot, composed of concrete filled metal pans, with appropriate static conductive floor finish.

C. Health and Safety: Provide ramps, steps, and walking surfaces that comply with codes and provide sufficient slip resistance.

D. Structure: Provide system that will adequately support both rolling and point loads anticipated for the particular room in which access flooring is being provided.

E. Operation and Maintenance: Provide not less than 2% extra floor panels and pedestals, and not less than 4 lifting devices for accessing and re-configuring floor system.

PRODUCTS

END OF SECTION C19

SECTION C2
INTERIOR FIXTURES

PERFORMANCE

A. Basic Function:

1. Provide elements fixed to interior construction that are necessary for complete and proper functioning of spaces required by the program.

2. Interior fixtures are functional items that are permanently attached to interior walls, ceilings, and floors, except for equipment items and items that are integral components of service systems, and comprise the following elements:
   a. Identifying Devices (C21): Informational accessories, including room numbers, signage, and directories.
   b. Storage Fixtures (C22): Non-furniture items intended primarily for storing or securing objects, materials, and supplies, including cabinets, casework, wardrobes, closet fixtures, lockers, and shelving.
   c. Window Treatment (C23): Non-furnishing accessories for control of light, solar heat gain, privacy, and view at interior and exterior windows, including blinds, shades, shutters, and curtain tracks.
   d. Accessory Fixtures (C24): Specialty items intended to provide service or amenity to building interiors, including toilet and bath accessories, postal fixtures, visual display surfaces, and telecommunications fixtures.

3. Where interior fixtures are integral with elements defined within another element group, meet requirements of both element groups.

4. In addition to the requirements of this section, comply with all applicable requirements of Section 111 - Facility Performance and Section C - Interiors.

B. Amenity and Comfort:

1. Accessibility: Provide interior fixtures that are easily usable by disabled persons without outside assistance.
   a. Comply with ADAAG-1994.

2. Light and Glare: Provide interior fixtures that are not a source of direct or reflected glare.
   a. Written and Graphic Information on Interior Fixtures: Clearly legible from typical viewing distances by occupants with normal eyesight.
   b. Surfaces Containing Written or Graphic Information: Matte finished to reduce the incidence of veiling reflections.
   c. Trans-Illuminated Surfaces: Luminance that is not more than 10 times brighter than surrounding surfaces under ambient lighting conditions for the space.

3. Convenience: Provide interior fixtures with fittings and controls that are manageable without special instruction or the need for excessive force.

4. Appearance: Provide interior fixtures that are coordinated in design with other elements of interior construction, using compatible materials, colors, textures, and design features.

5. Texture: Provide durable, low maintenance exposed surfaces for interior fixtures that are within reach of occupants engaged in activities normal for the particular space in which they are installed.
   a. Flat Metal Surfaces: Coatings not permitted.
   b. Hardware and Other Rounded Metal Surfaces: Coatings not permitted.

C. Health and Safety:

1. Flammability: Provide interior fixtures made of materials with flame spread index of 25 or less and smoke developed index of 450 or less when tested in accordance with ASTM E 84-2007 at all locations

throughout the project.

D. Structure:

1. Live Loads: Provide suspended interior fixtures or portions of fixtures designed for storage or support of persons or objects that have been engineered and installed to withstand at least 1.5 times the anticipated live loads without excessive deflection or permanent distortion.
   a. Substantiation:
      1) Construction Documents: Engineering calculations or proven-in-use substantiation.

2. Seismic Loads: Provide interior fixtures or portions of fixtures designed for storage or support of persons or objects that have been engineered and installed to withstand seismic forces that are 20 percent greater than those required by code.
   a. Application: For design purposes, apply the component seismic force at the center of gravity of the component non-concurrently in any horizontal direction.
   b. Exception: For design purposes, the contents to be included need not be more than 50 percent of the rated capacity of the interior fixture if the supports and framing of the fixtures are designed and connected to act as braced or moment-resisting frames.
   c. Substantiation:
      1) Preliminary Design: Detailed listing of design criteria and preliminary analysis, prepared by a licensed structural engineer.
      2) Construction Documents: Detailed design analysis by licensed structural engineer.

E. Operation and Maintenance:

1. Ease of Use:
   a. Language of Identifying Devices: All text in English.
   b. Interior Fixtures with Movable Components: Easy to use without special instruction and designed to prevent misuse.
   c. Hinges and Latches: Heavy duty hardware, easily adjustable, providing minimum anticipated service life of 20 years.
   d. Mechanical Controls: Movable cranks, rotors, pulleys, and levers designed for trouble-free operation over a minimum anticipated service life of 20 years.
   e. Substantiation:
      1) Design Development: Product data on hardware and other movable components of interior fixtures.
      2) Construction Documents: Details of interior fixtures, documenting construction features.

2. Ease of Repair: Provide interior fixtures at all locations that are designed to permit repair or replacement of individual components without removal of fixture.

3. Ease of Replacement or Relocation: The construction will provide interior fixtures at all locations that are modular in form, detachable from substrate without damage to fixtures, and re-locatable.

END OF SECTION C2

SECTION C21
IDENTIFYING DEVICES

PERFORMANCE

A. Basic Function:

1. Provide identifying devices fixed to interior construction that are necessary for direction to and identification of functions and spaces as required by the program.
   a. Room Label Signs: Provide room label signs. Room numbering will be provided by NREL..
   b. Directional Signs: Provide directional signs at all building entrances.
   c. Architectural Signs: Provide architectural signs as required by the program.
   d. Building Directories: Provide adequately sized directories at public building entrances, elevator lobbies on each floor, and escalators on each floor.
   e. Standard Operating Procedure Holders at all laboratory entrances.
   f. Office Signage: signage identifying occupant

2. Identifying devices comprise the following elements:
   a. Room or function labels applied to doors or walls immediately adjacent to doorways.
   b. Signs that provide guidance to, or information about, building functions or spaces, including directional signs, locator maps, and logotypes.
   c. Large decorative or architectural signs, including three dimensional graphics and illuminated lettering.
   d. Building directories with replaceable information strips.
   e. SOP (Standard Operating Procedures) holders.
   f. Signage that provides guidance, identification or information about Safety and Security.

3. Text/Content of Identifying Devices: Some content will be provided by NREL; remainder to be provided by Subcontractor for NREL's approval.

4. Where identifying devices are integral with elements defined within another element group, meet requirements of both element groups.

5. In addition to the requirements of this section, the construction will comply with all applicable requirements of Section 111 - Facility Performance, Section C - Interiors, and Section C2 - Interior Fixtures.

B. Amenity and Comfort:

1. Accessibility:
   a. Identification devices will comply with ADAAG-1994.
   b. Room Labels: Dual signage for visually handicapped and normally sighted.
   c. Function Labels: Graphic and Braille signs for the following building services and functions:
      1) Stairways.
      2) Elevators.
      3) Toilets.
      4) Closets accessible from corridors and lobbies.
      5) Hazardous areas.
   d. Directional Signs: Accessible graphic and Braille signs in addition to any that are mounted above head height.
   e. Building Directories: Accessible raised or recessed lettering in addition to listings protected by glass or plastic.

2. Visibility:
   a. Character Size: Provide signs with characters of adequate size to be seen comfortably by normally sighted persons at typical viewing distances.
      1) Wall-Mounted Corridor Signs or Signs Intended for Viewing at Less Than 5 feet (1.5 m):

Minimum character height of 5/8 inch (16 mm) and maximum of 2 inch (50 mm).

2) Signs Mounted Above Head Height or Intended for Viewing at More Than 10 feet (3.0 m): Minimum character height of 3 inches (75 mm).

b. Fonts: Provide one font throughout the project as follows:

1) Helvetica.

c. Reflectivity: The construction will provide signs with matte surface measuring 11-19 degree gloss on 60 degree glossimeter.

d. Contrast: The construction will provide signs with contrast between characters and background of not less than 70 percent.

3. Convenience:

a. Room Label Signs: Provide signs with feature allowing NREL to change information.

4. Appearance:

a. Provide signage for entire project that is consistent in design with other interior features and coordinated with overall color scheme. Site signange to match existing themes at the site

b. Room Label Signs: Framed panel signs.

c. Directional Signs: Backlit box signs.

d. Architectural Signs: Custom designed, with three-dimensional characters and backlighting.

C. Health and Safety:

1. Emergency Signs: In addition to exit signs required by code, the construction will provide the following types of signs:

a. Self-illuminating signs at electrical closets and equipment rooms.

b. Self-illuminating exit signs at stairways, mounted not more than 6 inches (150 mm) above the floor and immediately adjacent to stairway doors.

2. Safety Signs: In addition to signs required by code, the construction will provide danger signs with bright background color at locations required by code or deemed necessary by NREL EHS.

D. Operation and Maintenance:

1. Ease of Replacement: For building directories, provide system with message strips that are easily replaceable by NREL's personnel.

END OF SECTION C21

SECTION C22
STORAGE FIXTURES

PERFORMANCE

A. Basic Function:

1. Provide storage fixtures attached to interior construction that are necessary for proper functioning of spaces required by the project program.

2. Storage fixtures comprise the following elements:
   a. Closed Material and Utensils Storage: Provide modular storage cabinets and countertops with capacity adequate to accommodate required functions in spaces as follows:
      1) SP3 (Equipment utilization).
   b. Miscellaneous Storage Fixtures: Provide shelves and hooks with capacity adequate for anticipated occupancy in spaces as follows:
      1) SP3 (Equipment utilization).
      2) SS (Storage).
   c. Temporary Lockable Storage: Provide lockable transient storage units adequate for anticipated occupancy in spaces as follows:
      1) SU1 (Maintenance facilities).
   d. Open Material Storage: Provide storage racks or utility shelves for material storage adequate for anticipated needs in spaces as follows:

3. Where storage fixtures are integral with elements defined within another element group, meet requirements of both element groups.

4. In addition to the requirements of this section, comply with all applicable requirements of Section 111 - Facility Performance, Section C - Interiors, and Section C2 - Interior Fixtures.

B. Amenity and Comfort:

1. Accessibility:
   a. Storage fixtures will comply with ADAAG-1994.
   b. Amounts of Storage: Provide accessible storage comprising not less than 10 percent of available storage fixtures of each type, but in no case less than one of each type.
   c. Clothing Storage: Where transient clothing storage is required, including closets, wardrobes, closet fixtures, and clothing lockers, provide shelves, clothes hooks, and hanging rods that are not more than 54 inches (1370 mm) from the floor.
   d. Countertops: Where work surfaces or countertops over storage fixtures are required, the construction will provide wheelchair access to not less than 10 percent of surface at maximum height of 34 inches (864 mm) from the floor.
   e. Storage Shelving: Where open or closed material storage is required, provide not less than 20 percent of shelving within a maximum height of 54 inches (1370 mm) and a minimum height of 9 inches (230 mm) from the floor.

2. Noise Control: The construction will provide closed storage fixtures equipped with hardware or fittings that minimize the sound generated by door slamming.

3. Convenience:
   a. Secured Clothing Storage: Provide individual lockable storage units for transient usage throughout the project that are equipped with hat shelf, clothes hanger rod, and wall hooks.
      1) Depth: Not less than 21 inches (530 mm), to accommodate clothes hangers.
      2) Height: Not less than 48 inches (1220 mm) of hanging space.

4. Stored Item Security:
   a. Locks: Provide locking capability at storage fixtures as follows:
      1) Lockers: Hasps for padlocks.

5. Ventilation: For wardrobe lockers, provide for air circulation through fixture by means of door louvers, gaps at head and sill, perforations, or expanded metal panels.

6. Appearance:
   a. Cabinetry: For closed storage fixtures, provide elements that are designed to complement interior finishes, with concealed hinges and door and drawer pulls integrated into cabinet fronts.

C. Health and Safety:

1. Combustibility: Provide storage fixtures throughout the project that are made of totally incombustible or fire-retardant treated materials.

2. Fire Hazard: At locations intended for the storage of flammable or highly combustible materials, the construction will provide storage fixtures made of totally incombustible materials and doors that are lockable and airtight.

D. Structure:

1. Seismic Loads: Provide storage racks and shelving units that have been engineered and installed to withstand seismic forces as specified in Section C2.

PRODUCTS

A. Built-In Cabinetry and Casework:

1. Use one of the following:
   a. Custom-made wood cabinets with plastic laminate finish and solid surfacing counter tops at office and general use functions.
   b. Painted Metal cabinets with epoxy counter tops at laboratories. At electronics labs, provide real butcher block counter tops.
      1) Basis of Design: Hamilton

2. The construction will not use:
   a. Wood products from old growth forests.
   b. Wood composite products using added urea formaldehyde.

END OF SECTION C22

SECTION C23
WINDOW TREATMENT

PERFORMANCE

A. Basic Function:

1. Provide window treatments attached to interior construction that are necessary for adequate control of light, glare, privacy, and views for spaces with interior and exterior windows.

2. Window treatments comprise the following elements:
   a. Window shades at all exterior windows.

3. Where window treatments are integral with elements defined within another element group, meet requirements of both element groups.

4. In addition to the requirements of this section, the construction will comply with all applicable requirements of Section 111 - Facility Performance, Section C - Interiors, and Section C2 - Interior Fixtures.

B. Amenity and Comfort:

1. Thermal Comfort: Provide window treatment throughout project that enhances interior thermal comfort.

2. Accessibility: Comply with ADA Accessibility Guidelines and the following:
   a. Extent: The construction will provide accessible controls for all window treatments, regardless of location.
   b. Location: Where accessible window treatments are required, the construction will provide controls that are mounted so they can be reached from a wheelchair and are not more than 48 inches (1220 mm) and not less than 15 inches (380 mm) from the floor.
   c. Operating Force: Where accessible window treatments are required, the construction will provide controls that can be operated without tight grasping or pinching and by a force of not more than 5 lbf (22.2 N).

3. Light and Glare Control: Provide window treatment throughout project that will allow control of light transmitted through window assembly.
   a. Full Open Position: Maximum reduction of light level of 10 percent.
   b. Full Closed Position: Minimum reduction of light level of 50 percent.

4. Convenience: Provide window treatment throughout project with controls that are conveniently located and easily operated.
   a. Vertical Movement by Manual Controls: Maximum weight of window treatment of 20 lb (9 kg).
   b. Horizontal Movement by Manual Controls: Maximum weight of window treatment of 60 lb (27.2 kg).

5. Appearance: Provide window treatment throughout project that is coordinated with window modules and does not conflict with expression of architectural elements of interior construction.
   a. Concealment: Provide window treatment that is concealed from normal viewing angles when completely open.
   b. Uniformity: Provide window treatment system that maintains uniform appearance by limiting open positions to a predetermined number of possibilities.

6. Texture: Provide window treatment throughout project that is smooth or polished.

C. Health and Safety:

1. Combustibility: Provide window treatments throughout the project that are made of totally incombustible or fire-retardant treated materials.

2. Flammability: Provide window treatments made of materials with flame spread index of 25 or less and smoke developed index of 450 or less when tested in accordance with ASTM E 84-2007 at all locations throughout the project.

D. Durability:

1. Colorfastness: Provide window treatment throughout project that is resistant to degradation from exposure to ultraviolet light.
   a. Painted Aluminum: Maximum of 5 Delta E units (Hunter) color change as calculated in accordance with ASTM D 2244-2005 after 5 years of exposure in accordance with AAMA 2604-2005.
   b. Fabric: No less than Grade 4 after 200 hours, per AATCC 16-2004, Option A.
   c. Substantiation:
      1) Construction Documents: Test results or proven-in-use data for proposed window treatments.

END OF SECTION C23

SECTION C24
ACCESSORY FIXTURES

PERFORMANCE

A. Basic Function:

1. Provide accessory fixtures as required to accomplish the design as required by code and indicated in attached Equipment List.
   a. Mirrors:
      1) Continuous mirror for each group of lavatories.
      2) Other locations where indicated in project program.
   b. Grab Bars: Wherever required for safety and assistance in use of toilet and bath fixtures, and at toilets designed for the disabled and showers.
   c. Waste receptacles.
      1) One for each paper towel dispenser.
   d. Shower Fixtures:
      1) Closures that prevent water spillage onto floors and walls outside showers.
      2) Shower seats where indicated.
   e. Holders and dispensers for toilet, sink, and bath supplies furnished by NREL.
      1) Toilet Paper: Roll, consumer-size; one dispenser per toilet and bidet.
      2) Towel bars or hooks, in each bathroom, to hold 2 unfolded items to dry, 6 folded items, and 2 hooks.
      3) Hand Soap: Liquid, one dispenser for each lavatory.
   f. Hooks for temporary storage of occupants' property; one in each toilet compartment.
   g. Holders and dispensers for cleaning supplies, utensils, and tools furnished by NREL.
      1) Mops and Brooms: 6 items to be hung up in each janitor's closet, plus shelf for supplies.
   h. Visual Display Fixtures: Configuration and surface area as indicated in the program.
      1) Erasable surfaces, which are identified in the program as chalkboards.
         a) Abrasive, toothed surface for marking with chalk and erasure with and without using water.
         b) Holders for writing materials, below and full length of each area of erasable surface.
      2) Tackable surfaces, which are identified in the program as tackboards, for standard push pin use.
      3) "Smart Boards": Erasable boards that allow images and text to be captured in electronic format.
      4) Projection surfaces, which are identified in the program as projection screens.
         a) Projection surface area must be calculated separately from other display surface types.
         b) Projection equipment will be furnished under Section E11.
         c) The construction will coordinate the surfaces and equipment provided with the room/space design, lighting, and sound reinforcement equipment, for optimum viewing at all normal seating locations, without hot spots, loss of resolution, excessive dimming of image, or difficulty of hearing.
         d) Substantiation:
            (1) Design Development: Audio-visual space layouts, showing normal seating locations, projection locations, and recommended projection equipment.
            (2) Construction Documents: Certification of suitability of selected projection surfaces by manufacturer; identification of required projection equipment.

2. Where accessory fixtures also must function as elements defined within another element group, meet the requirements of both element groups.

3. In addition to the requirements of this section, the construction will comply with all applicable requirements of Section 111 - Facility Performance, Section C - Interiors, and Section C2 - Interior Fixtures.

B. Amenity and Comfort:

1. Visual Properties of Projection Surfaces:
   a. Contrast and resolution sufficient to provide accurate viewing at all normal seating locations in the room or space.
   b. Ambient light rejection as required to provide minimum gain specified under design lighting conditions.

2. Convenience of Visual Display Surfaces:
   a. Except as otherwise indicated, required surface area will be accomplished within the "usable" areas as follows, although additional area is not objectionable:
      1) Erasable Surfaces: Not less than 30 inches (760 mm) above floor; not more than 72 inches (1830 mm) above floor.
      2) Tackable Surfaces: Not less than 36 inches (915 mm) above floor; not more than 72 inches (1830 mm) above floor.
      3) Projection Surfaces: Not less than 36 inches (915 mm) above floor; not more than 84 inches (2134 mm) above floor.
   b. Projection Surface Access: Either permanently exposed in locations required or easily assembled or lowered without the use of tools.
      1) Surfaces Concealed When Not in Use: Access by up/down controls conveniently located near space entrance(s) and to session presenter location, if any, but minimizing likelihood of tampering by audience members.

3. Appearance of Visual Display Surfaces:
   a. Color: White surfaces will be provided.
   b. Tackable Surfaces: Self-healing material or surface finish that minimizes visibility of ordinary thumbtack holes.
   c. Flatness: Permanently flat, without warp or bow.

C. Health and Safety:

1. Fire Retardance:
   a. Projection Surfaces: Free-hanging and tensioned fabric screens flame retardant in accordance with code.

2. Broken Glass Hazard: Provide only fully tempered float glass for glass in fixtures.

D. Structure:

1. Grab Bars: Strength, design, anchorage, and support as required to withstand 250 pounds-force (1112 N) applied vertically at the center between supports and 250 pounds-force (1112 N) tension applied at any support; supports of sufficient rigidity to prevent rotation of bars under load.

E. Durability:

1. Service Life Span:
   a. Erasable Surfaces: Minimum of 20 years, including appearance.

2. Indoor Units: Materials and finish complying with specified requirements for equivalent environments specified in Section C /

3. Wear Resistance:
   a. Visual Display Surfaces: Surfaces will comply with requirements of Section C16 for wall finishes for the building spaces in which installed, as a minimum.
   b. Erasable Surfaces: Designed to withstand marking with the specified materials without permanent damage, imprint, or visibility of erased markings.
   c. Tackable Surfaces: Tackable material and surface finish durability not less than would be provided by applied wall coverings complying with ASTM F 793-2007 Category II-Decorative with Medium

Serviceability.

d. Projection Surfaces: Fragile surfaces protected from accidental damage by providing covering or concealment when not in use.

4. Moisture Resistance:
   a. Shower Curtains: Do not use plastic shower curtains unless treated with a permanent mildewcide.
   b. Mirrors: Silvered surfaces protected from degradation due to presence of moisture.

F. Operation and Maintenance:

1. Frequency of Servicing: NREL expects that refilling/emptying will occur at the following intervals; the construction will provide capacity appropriate to servicing interval and expected use, based on project occupancy:
   a. Paper Towel Dispensers: Daily.
   b. Toilet Paper Dispensers: Daily, with sufficient redundancy to prevent running out.
   c. Toilet Seat Cover Dispensers: Daily.
   d. Hand Soap Dispensers: Daily.
   e. Waste Receptacles: Daily.

2. Ease of Cleaning:
   a. Waste Receptacles: Disposable liners or bags.

3. Ease of Repair:
   a. Mirrors: Breakable glazing replaceable without disassembly of frame.

4. Theft Deterrence:
   a. Toilet Accessories:
      1) In Public Restrooms: Secure to substrates using tamperproof or concealed fasteners.

END OF SECTION C24

SECTION C29
OTHER INTERIOR FIXTURES

PERFORMANCE

A. Basic Function:

1. Accoutrements for the facility, including recessed first aid stations, AEDs (automatic external defibrillators located near restroom core on each floor), emergency egress signs/maps shall be included in the work.

END OF SECTION C29

SECTION D
SERVICES

PERFORMANCE

A. Basic Function:

1. Provide the following services:
   a. Conveying Systems (D1): Mechanized means of conveying people and goods, as specified in the project program.
   b. Water and Drainage (D2): Means of delivery of water to points of utilization; automatic heating and conditioning of domestic water; and unattended removal of water, rainwater, and liquid waste.
   c. HVAC (D3): Artificial means of maintaining interior space comfort and air quality, including heating, cooling, ventilation, and energy supply.
   d. Fire Protection (D4): Automatic fire detection, suppression, and warning; automatic smoke control; and manual fire-fighting equipment.
   e. Electrical Power (D5): Energy to operate all electrically-operated devices, including those included under other services and those provided separately by NREL.
   f. Artificial Lighting (D6): Means of illuminating spaces and tasks, both interior and exterior, independent of reliance on natural light.
   g. Telecommunications (D7): Services that include voice and data transmission, telephone equipment, sound reinforcement, television reception, and television distribution.
   h. Process Utilities (D8): Services that include specially processed water, special waste removal or treatment, air and gases, fuels, HVAC, special fire protection, special telecommunications, and special measurement and control.
   i. Other Services (D9): Services that include integrated facility controls, surveillance and security controls, special grounding, and cathodic protection. Within the D9 chapters are D99 subchapters which describe service elements for each laboratory.

2. Utility Sources and Outlets:
   a. Water Source: Existing public utility.
   b. Sewage Disposal: Connect building sewer to the existing public sewage system.
   c. Rain Water Drainage Outlet: Existing public utility storm drainage system independent of sanitary sewer.
   d. Electrical Power Source: Existing public utility.

3. Equipment That is Not Part of Services Systems: Specified in the project program and in Sections E, E1, or E11 through E19.

4. Where services elements must also function as elements defined within another element group, meet the requirements of both element groups.
   a. Services elements within food service spaces will also comply with requirements of Section E12.
   b. Where services elements are located outside the building in the site area, meet applicable requirements of Sections G3, G31, G32, G33, G34, and G39.

5. In addition to the requirements of this section, the construction will comply with all applicable requirements of Section 111 - Facility Performance.

B. Amenity and Comfort:

1. Artificial Illumination: Provide illumination for all interior spaces that is adequate in level and quality for comfortable performance of tasks typical for each space, regardless of the availability of natural light.
   a. Light Levels: See Section D6.

b. Accent Lighting: In addition to general and task illumination, provide lighting on architectural features, displays, and artwork in focal areas to produce luminance that are within the range of 5:1 with respect to ambient background.
c. Substantiation:
   1) Design Development: Overall lighting scheme, including types of luminaires and lamps for primary spaces.
   2) Construction Documents: Calculations of luminance levels for representative spaces, prepared by a registered electrical engineer.
   3) Construction: Measurements of luminance and luminance levels for representative spaces throughout the project, with a report setting forth results after correcting for maintenance factors keyed to luminaire design and lamp types.

2. Equipment Producing By-Product Heat: The construction will provide ventilation for housings and cabinets as required by equipment manufacturer and rooms and spaces as required to maintain specified environmental conditions.
   a. It is encouraged to recover by-product heat produced by equipment, to be beneficially used within the building envelope.

3. Moisture: Prevent condensation from forming on service elements.

4. Airborne Sound:
   a. Maintain the sound transmission characteristics of assemblies through which services must pass; comply with requirements of Section where penetrated assembly is specified.
   b. Prohibited Plumbing Noises: All sounds of flushing and of liquid running through pipes ("bathroom sounds") are prohibited outside of the rooms housing toilets, bathtubs, and showers, with the exception of when doors to those rooms are open.
   c. Equipment Noises: Noise level below that which will be objectionable, based on occupancy of spaces.
   d. When services are located within assemblies that perform sound isolation functions, consider the noise produced by the service itself as one of the external sound sources.

5. Structure-Borne Sound and Vibration: Prevent transmission of perceptible sound and vibration from services equipment that rotates, vibrates, or generates sound, by isolating such equipment from superstructure or by isolating equipment support foundations from building foundations.
   a. Substantiation:
      1) Preliminary Design: Identification of sound- and vibration-generating equipment and method of isolation.
      2) Construction Documents: Details of isolation methods.
      3) Closeout: Measurement of sound transmitted through structure during functional performance testing and during full operation of all systems.

6. Cleanliness: Prevent accumulation of debris and dirt at floor mounted equipment, such as air handlers, chillers, pumps, switchgear, and panelboards by one or more of the following methods.
   a. Provide 4 inch (100 mm) thick, concrete housekeeping pads with a minimum 4 inch overhang beyond the equipment edges.
   b. Provide corrosion-resistant equipment stands.

7. Odors: The construction will eliminate, isolate, or exhaust odors produced by occupant functions and building services.

8. Appearance:
   a. Conceal services elements from view to greatest extent possible, with exposed portions of simple, neutral design and color.
      1) Exception: Standard designs of manufacturers, without consideration for appearance, may be used for fire suppression sprinkler heads.
      2) Exception: Exposed portions are acceptable

3) Where exposed portions are acceptable, the construction will not obstruct or diminish clear dimensions of doorways, windows, other operable openings, access panels and cabinet doors, or passageways, stairs, and other exitways.
4) Where exposed piping is acceptable, piping will be installed close to walls and overhead structure, parallel and square to finished construction, plumb and nominally horizontal (except where required to slope for drainage).

b. Annular spaces around pipes, ducts, and conduits, where they pass through walls, ceilings, and floors will be covered with escutcheons or cover plates.
   1) Exception: Escutcheons not required in SU1, SU2, SV1, and SV3 areas, provided annular spaces are filled completely with the proper fire rated assembly

c. Mountings: On finished surfaces, concealed attachments will be used, with cover plates, frames, or trim overlapping finishes.

C. Health and Safety:

1. Fire Safety:
   a. Maintain fire resistance of walls, floors, ceilings, and other fire-rated assemblies that services must pass through, in accordance with requirements of the Section in which the fire-rated assembly is specified.
   b. Provide fire-rated separations between equipment rooms and other spaces where required, and as specified by, the code.
   c. Substantiation for Combustible Materials, Where Allowed: UL listed or labeled, with flame spread and smoke developed ratings printed on product.
   d. Provide products which are fire rated for the specific locations where they are installed.

2. Safety Hazards: Avoid creating safety hazards wherever possible; where services must involve flammable materials or hazardous operations, comply with code.

3. Excess Pressure: Pressurized components will be designed to withstand operational pressures without failure and to relieve or reduce excessive pressure to prevent failure.

4. Misuse: Minimize misuse that could result in damage to property, injury, or loss of life.

5. Hazardous Contents:
   a. Flammable liquid storage locations are identified in section D99.
   b. Flammable gas storage locations are identified in section D99.

6. Electric Shock: The construction will provide equipment which protects personnel from electrical shock.

7. Toxic Materials:
   a. Lead: Do not use lead or lead-containing materials in potable water systems.

8. Underground Utility Marking
   a. Provide Marker balls shall be compatible with 3M Dynatel Advanced Locator 2250
      1) For utilities located within 5' of surface - 3M ID Extended Range Ball Marker Series 1420-XR/ID, programmable, color identified by trade: Gas - Yellow, 1425-XR/ID, Power - Red, 1422-XR/ID, Telephone/Communication - Orange, 1421-XR/ID, Sanitary Sewer - Green, 1424-XR/ID, Water - Blue, 1423-XR/ID.
      2) Intermediate marker balls shall be - 3M Non RFID Marker Series 1400-XR: Gas - Yellow, 1405-XR, Power - Red, 1402-XR, Telephone/Communication - Orange, 1401-XR
      3) Sanitary Sewer - Green, 1404-XR, Water - Blue, 1403-XR .
      4) As-Built Drawings: Incorporate locations of marker balls with each ball marked with their NREL Marker number into the final as-built set of drawings.
      5) NREL shall provide the Contractor with the Utility Marker Ball Location form which is to be returned to NREL at the completion of the underground utility installation. Contractor shall fill in the information on the Utility Marker Ball Location form for all ID marker ball

installations. Information to be provided is:

a) NREL Marker # - Numbering sequence as shown and described below in Paragraph 3.1-G
b) Location - Descriptive location of where marker ball has been placed. This will include the following information as applicable: Bends (22.5 degrees or higher) including Degree of bend, Direction of bend; Tees including Direction of branch, Capped line; Plugged line; End of line.
c) Depth - Distance from finished surface shown in feet and inches.
d) Manufacturer ID # - As shown on manufacturer ID tag.

6) Intermediate marker balls shall be utilized on straight runs of pipe. These balls do not require any ID marker information. Intermediate marker balls will be placed every 50'.

b. Tracer wire is required on all Power, Gas, Telephone/Communication (telecom), Water, and Sanitary Sewer.
c. Marker tape 1' below surface is required on all underground utilities.
d. Marker balls shall be placed a minimum of 4" directly above utility pipe. If the utility pipe is deeper than 5' contractor shall place the marker balls 5' below the surface.

D. Structure:

1. Supports for Piping, Conduit, Ducts, and Components: Attached to, and supported by, the superstructure, not to or by non-structural construction or sheet metal elements, so that they do not move or sag, using the following:
   a. Supports that allow movement of the rigid linear elements (pipe, etc.) without undue stress on the piping, tubes, fittings, components, or the superstructure.
   b. Intermediate supports mounted between structural members to limit distance between supports.
   c. Supports capable of handling seismic forces in accordance with the code.
   d. Mounting frames, bases, or pads, designed for ease of anchorage or mounting.
   e. Rigid sway bracing at changes in direction of more than one-half of a right-angle, for all pipes.
   f. Substantiation:
      1) Design Development: Details of supports, including engineering analysis.

2. Structural Design of Components and Their Supports: In accordance with code.
   a. Safety Factor for Component Structural Elements: Two; based on weight (mass) of component.
   b. Anchors: All services components will be securely and positively attached to superstructure.

3. Concealed or Buried Components: Arrange cover or concealment so that components are not subjected to damaging stresses due to applied loads.

E. Durability:

1. Expected Service Life Span: Same as the service life of the building, except as follows:
   a. Ducts, Piping, and Wiring in All Services: Same as the service life of the building.
   b. All Components Permanently Installed Underground or Encased in Concrete: Same as service life of building.
   c. Conveying Systems: Minimum 20 years.
   d. Plumbing:
      1) Shut-Off Valves and Similar Components: Same as service life of building.
      2) Electrically- and Fuel-Operated Equipment: Minimum 20 years.
      3) Other Moving Components: Minimum 20 years.
      4) Plumbing Fixtures: Same as building service life.
      5) Sink Faucets, But Not Other Fittings: Minimum 20 years.
   e. HVAC:
      1) Shut-Off Valves: Minimum 20 years.
      2) Dampers, Louvers, Registers, Grilles: Same as service life of building.
      3) Main Heat Generation and Cooling Equipment: Minimum 20 years.

4) Secondary Equipment: Minimum 20 years.
5) Control Components, Except Wiring: Minimum 10 years.

f. Fire Protection:
1) Sprinkler Heads, Valves, and Other Inlet and Outlet Components: Same as building service life.
2) Pumps and Other Operating Components: Minimum 20 years.

g. Electrical:
1) Power Distribution Equipment: Same as building service life.
2) Power Generation Equipment: Minimum 20 years.
3) All Components of Life Safety-Related Systems: Minimum 20 years.
4) Control Components, Except Wiring: Minimum 10 years.

h. Lighting Fixtures: Minimum 15 years.
i. Telecommunications Systems: Minimum 20 years.
j. Integrated Facility Controls: Minimum 15 years.
k. Security and Surveillance Controls: Minimum 15 years.
l. Lightning Protection and Special Grounding Systems: Same as building service life.
m. Software and Firmware Integral to Operation of Services Equipment: Minimum 5 years functional life without reprogramming required.

2. Weather Resistance:
a. All components exposed to outdoor environment will comply with the requirements of Section B and Section B2; equipment enclosures are considered the equivalent of the exterior enclosure.
b. Liquid Storage and Distribution Components: The construction will prevent freezing during longest duration of low temperature anticipated, based on historical weather data; if necessary, automatically controlled supplemental heating will be provided.
c. Buried Water Piping: Minimum of 6 inches (15 mm) below lowest recorded level at which the ground freezes.
d. Services Passing From Inside to Outside: Openings through shell sealed as required to meet performance specified, and using materials specified, in Section B, Section B2.

3. Condensation: Provide insulated drain pans and piping to remove condensation from cooling coils.

4. Moisture Resistance: Where components are mounted to surfaces that are required to be moisture-resistant, mounting surface of components will be sealed to finish surface so that moisture cannot penetrate under or behind component, using material that is not affected by presence of water, that is mildew-growth resistant, and that has a minimum service life of 10 years.

5. Temperature and Humidity Endurance: Designated to endure temperature and humidity that will be encountered and to resist damage due to thermal expansion and contraction.

6. Corrosion Resistance: Corrosion will be prevented by using corrosion-resistant materials, by preventing galvanic action, by preventing contact between metals and concrete and masonry, and by preventing condensation on metals.
a. Metals Considered Corrosion-Resistant: Aluminum, stainless steel, brass, bronze, cast iron, ductile iron, malleable iron, hot-dipped galvanized steel, chrome-plated steel, cadmium-plated steel, and steel coated with high-build epoxy or coal tar-based paint.
b. Piping Connections for Piping of Dissimilar Metals: Dielectric adapters.
c. Underground Elements: Provide supplementary protection for underground metal pipes, ducts, conduits, and tanks, sufficient to prevent corrosion completely, for the service life of the element without maintenance.
1) 3 inches (150 mm) of concrete cover is considered to be permanent protection.
2) See Section D94 for cathodic protection requirements.

7. Accidental Water Leakage: Locate components that would be damaged by water leakage from pipes or through foundations or roof out of likely paths of water and at least 4 inches (100 mm) above floor

level.

8. Abuse Resistance:
   a. Buried Components: Minimum of 12 inches (300 mm) below surface of ground.
   b. Underground Piping and Conduit: Watertight and root-proof.
   c. Finishes on Exposed Components Subject to Touching by Occupants: Durable enough to withstand regular scrubbing using ordinary methods.
   d. Provide equipment which has been designed to prevent tampering.

9. Accidental Damage: Protect equipment and piping from accidental damage.

10. Underground Piping Accidental Damage: Protect heating piping and chilled water piping from accidental damage with a warning tape buried 12 inches (300 mm) above the pipe.

F. Operation and Maintenance:

1. Capacity:
   a. Conveying Systems: As specified in the project program.
   b. Water and Drainage: As required by code and as specified in Section D2.
   c. Heating, Cooling, and Ventilating: Maintain interior environment within ranges specified in Section 111 and D99 sections.
   d. Fire Suppression: As required by code and as specified in Section D4.
   e. Electrical: As required by code and as specified in Section D5.
      1) Power: Non-interruptible power supply.
   f. Telecommunications: As specified in project program.
      1) Telephone: Internal wiring, outlets, and equipment required by utility company to be furnished by property NREL; provide one outlet in each room, two incoming lines.
   g. Substantiation:
      1) Design Development: Engineering calculations showing input- and output-side capacities and loads and sizes of distribution elements.
      2) Construction Documents: Complete system details.
      3) Construction and Closeout: Functional performance testing, as specified in Section 8.9.

2. Efficiency:
   a. Energy efficiency as specified in Section 111.
   b. Water consumption as specified in Section 111.
   c. Substantiation: As specified in Section 111.

3. Ease of Use:
   a. Provide software which is year 2000 compliant.
   b. Access: All mechanical and electrical equipment located to allow easy access. Provide access doors for equipment accessed through walls, partitions, or fixed ceilings.
   c. Valves and Other Control Devices: Accessible handles, switches, control buttons; valve handles on top/upper side; chain or other remote operators where located out of normal reach above floor level.
   d. Space Around Components: Working clearances and access routes as required by code and as recommended by component manufacturer.
   e. Testing: After completion of installation, services will be prepared for starting-up by testing appropriately for proper operation.
   f. Commissioning: Prepare for use by eliminating operational anomalies, adjusting control systems for optimum operation, and demonstrating proper functioning, as specified in Section 8.9.
      1) Substantiation:
         a) Design Development: Identification of systems and equipment to be tested and method of test.
         b) Construction Documents: Complete commissioning plan.
         c) Construction and Closeout: Commissioning reports.

g. Preparation for Operation: Assistance will be provided for NREL's preparations for operation, as specified in Section 8.9 and as follows:
   1) Demonstration of all services to NREL personnel.
   2) Training NREL personnel in the operation of all service systems.
   3) Substantiation:
      a) Construction Documents: Schedule of demonstrations.
      b) Construction Documents: Training plan and schedule.
      c) Construction and Closeout: Documentation of training conducted. Submit a complete O&M manual with approved shop drawings and equipment warranties and other close-out documents as indicated in Section 8.

4. Ease of Cleaning: Where not otherwise specified, equipment mountings will be designed to allow easy cleaning around, and under, equipment, if applicable, without crevices, cracks, and concealed spaces where dirt and grease can accumulate and with raised, closed bases for equipment mounted on the floor.
   a. Provide equipment with removable access panels to allow cleaning.

5. Ease of Maintenance and Repair:
   a. Piping Other Than Gravity Drains: The construction will provide means of isolating convenient portions of piping system, so that small portions may be shut down leaving the remainder in operation and so that drainage of the entire system is not required to enable repair of a portion of it.
   b. Piping: Entire systems drainable without disassembly of piping.
   c. Above Ground Piping: Labeled to identify contents and direction of flow, each shut-off valve, each piece of equipment, each branch take off, and at 20 ft (6 m) maximum spacing on exposed straight pipe runs.
   d. Equipment in Piping Systems: Each unit provided with a union or flanged connector at each pipe connection to allow easy removal.

6. Ease of Equipment Service: As specified in Section 111 and the following:
   a. Lighting: Adequate for locating and operating equipment; emergency lighting for critical components.
   b. Do not locate any equipment requiring maintenance on the roof, in attics, in crawl spaces, where access must be through attics or crawl spaces, or where access is not possible using removable panels or doors.
   c. Parts Having Service Life Less Than That Specified for Element: Easily replaceable, without de-installation or de-mounting of the entire element, component, or equipment item.
   d. Valves: Easily replaceable internal parts, eliminating necessity of removal of entire valve for repair.
   e. Parts: Readily available from stocking distributors within 50 miles (80 km) of project location.
   f. Substantiation:
      1) Construction Documents: Identification of parts normally replaced during routine maintenance and parts replaced only when damaged or unexpectedly worn out; location of stocking distributors.

7. Maintenance Service: Maintain as specified herein, including periodic inspections, routine maintenance recommended by manufacturers, and repair and replacement of defective elements; maintenance is required only for systems so specified.

8. Ease of Equipment Removal: Provide doors and corridors large enough for removal of major pieces of equipment, such as, chillers, and boilers.
   a. Substantiation:
      1) Preliminary Design: Identify locations of major pieces of equipment.
      2) Design: Submit the measurements of the major pieces of equipment and the path for removal from the building. Verify doors and corridors provide adequate clearance for

removal of equipment.

3) Construction Documents: Indicate sizes of doors and corridors used for removal of equipment. Indicate equipment sizes.

9. Throughout the facility, elevated areas requiring regular maintenance shall be accessible. Piping, conduit and other utilities shall be arranged to allow a worker to access all utilities that require regular maintenance

END OF SECTION D

SECTION D1
CONVEYING SYSTEMS

PERFORMANCE

A. Basic Function:

1. Provide conveying systems required by the program or necessary to fulfill basic project functions.
2. Conveying systems are devices that move people or freight between levels or from one area to another, and comprise the following elements:
   a. Elevators (D11): All components for passenger, service, and freight elevators, including items such as shaft rails, pit ladders, exhaust louvers, and car and hoistway doors; see Section C16 for requirements for car finishes.
3. Comply with provisions of ASME A17.1-2004, unless otherwise indicated.
4. Provide conveying systems for moving people when any of the following conditions occur:
   a. Building or portion of building is more than 1 story tall and movement of people between floors is required.
5. Provide conveying systems for moving materials when any of the following conditions occur:
   a. Building or portion of building is more than 2 stories tall, and the need for occasional movement of large objects, materials, or equipment between floors is likely.
   b. There is likely to be a frequent need to move small items vertically between areas that are not more than 3 floors apart.
6. See Section E11 for lifts at loading docks, conveyance of waste, and lifts and hoists for window washing.
7. Where conveying systems are integral with elements defined within another element group, meet requirements of both element groups.
8. In addition to the requirements of this section, the construction will comply with all applicable requirements of Section 111 - Facility Performance and Section D - Services.

B. Amenity and Comfort:

1. Accessibility: Provide at least one accessible passenger elevator complying with code that serves every habitable level.
2. Sound Levels: Maintain ambient sound levels in spaces that include or are adjacent to operating conveying systems within levels specified in Section C - Interiors.
3. Appearance: Provide conveying systems that appear to be solid and monolithic in appearance, using opaque enclosures and massive materials.

END OF SECTION D1

SECTION D11
ELEVATORS AND LIFTS

PERFORMANCE

A. Basic Function:

1. Provide elevators required by the program or necessary to fulfill basic project functions.
2. Elevators move passengers (and a separate elevator for freight if facility is taller than 2 floors) vertically between levels and include the following elements:
   a. Electric Elevators: Hoisting machine, hoist ropes, car frame and enclosure, counterweight, guide rails and roller guides, power and operational controls, signal fixtures, hoistway entrances, door operator equipment and safety devices.
3. If the project has more than one level, provide passenger elevators to provide access to every habitable floor.
   a. Provide elevator capacity as required to comply with convenience levels in Section D1 - Conveying Systems.
4. If the project has more than one level, provide one passenger elevator that is large enough to transport and provide access to every floor for movement of people as well as materials, supplies, furniture, and equipment. If project is more than 2 levels, provide separate service elevator, in addition to passenger elevator. Regardless of number of elevators provided, at least one elevator must provide access to the roof level for movement of research equipment and materials.
5. Where elevators and lifts are integral with elements defined within another element group, meet requirements of both element groups.
6. In addition to the requirements of this section, the construction will comply with all applicable requirements of Section 111 - Facility Performance, Section D - Services, and Section D1 - Conveying Systems.

B. Amenity and Comfort:

1. Accessibility: Provide passenger elevators that comply with the Americans with Disabilities Act Accessibility Guidelines (ADAAG) and as follows:
   a. Cars with Center-Opening Doors: Minimum interior clear dimensions of 51 inches (1291 mm) deep and 80 inches (2030 mm) wide, with controls located on front wall, either side.
   b. Cars with Side-Opening Doors: Minimum interior clear dimensions of 51 inches (1291 mm) deep and 68 inches (1730 mm) wide, with controls located on front wall.

C. Structure:

1. Comply with structural requirements of code and the following:
   a. Provide elevator car frames that are all welded construction.

D. Durability:

1. Car and Hoistway Door Finishes: Comply with requirements specified in Section C16.
2. Elevator Doors: Provide doors at passenger elevators that are clad with brushed stainless steel.
3. Control Panels: Provide control and annunciator panel surfaces at passenger elevators that are clad with brushed stainless steel.
4. Railings: Provide protective railings at sides of passenger elevators that are made of brushed stainless steel.

E. Operation and Maintenance:

1. Passenger Elevator Duty: Operating characteristics as follows:
   a. Minimum Load Capacity: 3500 lb (1585 kg).
   b. Minimum Ultimate Elevator Speed:
      1) Up to 5 floors: 200 fpm (1.0 mps).

2. Dedicated Service Elevator Duty: Operating characteristics as follows:
   a. Minimum Load Capacity: 5000 lb (2265 kg).

3. Passenger Elevator Operating System: As follows:
   a. Single Elevators: Selective collective operation.
   b. Two Car Banks: Duplex collective operation, full selective service.

4. Operating Features for All Elevators:
   a. Key switch in each elevator car for independent operating service.
   b. Automatic load weighing bypass.
   c. Backup power operation of one designated car in accordance with code.
   d. Emergency phone connected to same central station as fire alarm system.

5. Elevator sump must not discharge to a drain or to the ground.
   a. Oil/water separator required for automatic discharge
   b. Liquid level detector with manual discharge acceptable
   c. The maximum discharge limit with the Metro Wastewater Reclamation District for oil and grease is 75ppm.
   d. Elevator design must include a provision for a secondary catchment basin, oil/water separator, oil-sensing pump, or other means to preclude inappropriate discharges.

6. One elevator shall access roof level if roof is being utilized for regular research activity.

PRODUCTS

A. Passenger Elevators:

1. Use one of the following:
   a. Electric elevators (machine room-less type).

2. Do not use any of the following:
   a. Hydraulic elevators.

END OF SECTION D11

SECTION D2
WATER AND DRAINAGE

PERFORMANCE

A. Basic Function:

1. Provide delivery of hot and cold domestic water to points of utilization and the removal of water, rainwater, and liquid waste.

2. Water and drainage elements comprise the following:
   a. Water Supply (D21): Water sources and storage.
   b. Plumbing Fixtures (D22): All fixtures necessary for sanitation, occupancy, and use that are connected to water supply or drainage; not including water heating or conditioning equipment (D23) or kitchen appliances.
   c. Domestic Water (D23): All elements required to distribute water to fixtures, including piping and equipment for water cooling, heating and storage.
   d. Sanitary Waste (D24): All elements required for removal of sanitary waste, including piping, venting, discharge and disposal, and equipment.
   e. Rain Water Drainage (D25): All elements required for drainage of rain water from building areas in which it may accumulate and drainage of clear wastes from building services; not including gutters and downspouts (B31) or subdrainage (A).

3. Where plumbing elements also must function as elements defined within another element group, meet the requirements of both element groups.

4. In addition to the requirements of this section, comply with requirements specified in Section 111 - Facility Performance and Section D - Services.

B. Amenity and Comfort:

1. Hot Water Supply:
   a. Provide pressure balanced shower valves which limit the water temperature to 120 deg F 49 deg C).

2. Noise:
   a. Designed to prevent noise due to air trapped in piping systems.
   b. Locate risers in dedicated and sound attenuated chases.
   c. Fixtures will be selected to minimize noise.

3. Convenience:
   a. Fixture Heights: As specified in code.
   b. Fixture Configurations: As specified in code.
   c. Water Connections: Hot water on the left side of fixtures and cold water on the right side of fixtures.

4. Odors:
   a. Odor producing elements will be located in areas separate from human occupancy in dedicated equipment rooms.
   b. The construction will not locate sanitary waste vent openings where odors are noticeable by occupants or by occupants of adjacent properties or where odor-bearing air may enter building spaces.
   c. The construction will connect fixtures to prevent entry of sewer gases into occupied spaces.

5. Appearance:
   a. Vents: Conceal vents from view.
   b. Conceal all piping in finished areas. Piping in laboratories may be exposed.

C. Health and Safety:

1. Health: The system will have potable water.
   a. Public utility water is considered to be potable.

2. Waste Disposal: Each fixture will be connected to sanitary drainage system for proper disposal of waste and harmful materials.

3. Pressure Control: Use 1/3-2/3 pressure reducing valve stations to protect the building, fixtures, equipment, and occupants from harm.
   a. Maximum Water Distribution Working Pressure: 80 psi (550 kPa).
   b. Pressure Reduction: Use one-third/two-third pressure reducing valves or regulators with full size bypass.
   c. Air Removal: Remove air trapped in water distribution system.

4. Prevention of Sewer Gas Leaks:
   a. Provide waste system vents as required by code to avoid trap siphonage or compression.
   b. The system design will prevent entry of sewer gases from the sanitary sewer into building's sewer system.

5. Protection of Potable Water Supply: As required by code.

6. Waste Drainage: water coolers
   a. All floor drains that have the potential to accept chemicals must be normally closed (cap, plug, collar, and valve) to preclude inadvertent discharges.
      1) Janitor closet floor drains to be normally closed
      2) Floor drains are not required for safety shower/eyewashes.
      3) No floor drains are allowed in lab areas.
      4) Bathroom drains may be normally open.
   b. Cup sinks and chemical fume hood sinks shall have a raised lip around the sink (typically 3/8" to ½").
   c. Bench top sinks may be flush with the bench-top but a raised lip is preferred.

7. Fire Hazards:
   a. Do not use combustible piping materials inside the building.

8. Hazard Labeling: Clearly label domestic hot water, domestic cold water, rain water drainage, and sanitary waste and vent systems indicating the nature of contents and direction of flow.
   a. Conform to requirements of ANSI/ASME 13.1-1996(R2002) and NREL building standards.

9. Laboratory Drainage: Prevent damage to public utility drainage systems by removing hazardous materials before discharging. Provide one or more indoor or outdoor control manholes (waste water sampling pit, box or structure), sized to accept industry standard self-contained sampling equipment, and located to accept all laboratory, process, and facility operations wastewater prior to connection to the sanitary sewer. Depth of this sampling manhole should be minimized.

D. Structure:

1. Insulated Pipes: Prevent compression of insulation by using pipe shields or saddles or dense insulation inserts.

E. Durability:

1. Joint Durability: Provide watertight joints.

2. Electrical Component Protection:
   a. Piping shall not be routed through electrical rooms, switchgear rooms, transformer vaults, and elevator equipment rooms.
      1) Where piping must be routed near electrical equipment, the construction will shield the

electrical equipment with drip pans which drain to the nearest floor drain.

b. Substantiation: See tests specified under Operation and Maintenance.

3. Equipment Protection:
   a. Domestic Water Distribution System: The construction will provide a filtration device upstream of equipment which may be damaged by debris in the distribution system.

4. Maximum Discharge Temperature into Sewer: 120 degrees F (49 degrees C).

F. Operation and Maintenance:

1. Capacity of Water Service: Provide adequate water flow and pressure to supply peak demand requirements. Comply with requirements specified in the code and Section D21.
   a. Water Delivery: If the water source has insufficient flow or pressure, the construction will provide means of increasing to required level.
      1) Use booster pumps as necessary to achieve minimum system pressure at remote fixture.
      2) All water usage for this building requires metering. Monitoring of water consumption by the Building Automation System is preferred.
      3) Substantiation:
         a) Preliminary Design: Identification of pressure and flow requirements (design conditions) for the building; verification of source availability at design conditions. Submit preliminary piping sizing calculations.
         b) Construction Documents: Equipment to be used to deliver water at design conditions; submit pump curves and final piping size calculation.
         c) Construction: Test of system flow and pressure; submit report verifying performance.
   b. Water Flow:
      1) Maximum Velocity: 8 fps (2.4 m/s) at the design flow rate for cold water and 5 fps (1.5 m/s) for hot water
   c. Water Supply Pressures:
      1) Service Main Working Pressure: 50 to 100 psi (690 kPa) at 75 deg F (24 deg C).
   d. Substantiation:
      1) Preliminary Design: Analysis and documentation of water supply source and flow conditions.
      2) Design Development: Piping design calculations and entrance locations.
      3) Construction: Prior to installation of plumbing fixtures and prior to concealment of piping, air and water tests of piping systems at 150 percent of operating pressure, maintaining pressure for 2 hours to demonstrate system is watertight.
      4) Construction: Functional tests of fixtures and equipment.
      5) Occupancy: Observation of function during full occupancy simulating extreme conditions.

2. Waste Pipe Sizing:
   a. The piping will be sized as required by code.
   b. Building Drain: 4 inches (100 mm) diameter, minimum.
   c. Buried Piping Below Slabs: 3 inches (75 mm) diameter, minimum.
   d. Pipes 3 inches (75 mm) in Diameter and Smaller: Sloped at 1/4 inch per foot (1:50), minimum, downward in the direction of flow.
   e. Pipes 4 inches (100 mm) in Diameter and Larger: Sloped at 1/4 inch per foot (1:50), minimum, downward in the direction of flow.
   f. Substantiation:
      1) Preliminary Design: Analysis and documentation of sewer discharge method and locations.
      2) Design Development: Drainage design calculations and documentation of piping outlets.
      3) Construction: Air and water pressure tests of piping systems; functional tests of drains and equipment under simulated full occupancy loads.
      4) Occupancy: Observation of function during full occupancy simulating extreme conditions.

3. Rain Water Drainage Capacity: As specified in the code and as follows:
   a. Design Rainfall Rate: Short storm intensity of 1 inch (25 mm) flow in any 5 minute period.
   b. Secondary Drainage: Required for roofs and exterior structural decks that do not drain naturally. Use secondary roof drains connected to a secondary drainage system.
   c. Substantiation:
      1) Preliminary Design: Analysis and documentation of rain water discharge methods and locations.
      2) Design Development: Drainage design calculations and documentation of piping outlets.
      3) Construction: Air pressure test to verify continuity of piping; functional tests of each drain.

4. Ease of Maintenance and Repair:
   a. Provide devices at each branch take-off which allow insertion of measurement devices to monitor flow and pressure levels in the water distribution system.
   b. Isolation of Piping Segments and Equipment: Provide a means of isolating the following:
      1) Each building from main water service. The construction will provide a shut-off valve located inside a valve box whose removable access cover is at grade level.
      2) Water meter from building piping.
      3) Each water branch from main service.
      4) Each vertical riser from piping below.
      5) Each water branch to fixtures or equipment from main vertical riser.
      6) Piping lower than the supply, to prevent unnecessary draining in the case of disconnection.
      7) Each plumbing fixture, storage tank, and item of equipment, so that removal of one will not necessitate shutdown of others.
      8) Individual fixtures and equipment. The construction will provide an isolation device within 3 feet (900 mm) of pipe connection to item.
      9) Isolated each hose bib, janitor sink, and lab faucet with a vacuum breaker or other back-flow device.
   c. Provision for Drainage of Water Distribution Piping:
      1) Slope Piping Toward Drain: 1/4 inch per 10 feet (1:500).
      2) Provide a system drain at the lowest point in the system.
      3) Provide an adequately sized drain for the volume of water inside the distribution system.
      4) Drain valve (or fixture shut-off valve) located at each low point.
   d. Provision for Cleaning of Drainage Piping: Cleanouts shall be provided as required by code and as follows:
      1) At the upstream end of each horizontal sanitary drainage pipe, for cleaning in direction of flow.
      2) Clearance: As required by code to allow for cleaning and rodding of pipe.

METHODS OF CONSTRUCTION

A. Use the following practices and procedures:

1. Health: Construction procedures will used to maintain the safety of the potable water source at all times. Flush and chemically clean plumbing systems in accordance with IPC (latest version) prior to final fill.
   a. Construction procedures will be used to prevent connection of the potable water source to any non-potable water source.
   b. Construction procedures will be used to prevent connection of private potable water source to public potable water source.

2. Provide the following tests in accordance with IPC (latest version).
   a. Drainage vent system test.
   b. Building sewer test.
   c. Water supply system test.

3. Provide pipe supports confirming to:
   a. MSS-58.
   b. MSS-69.

END OF SECTION D2

SECTION D21
WATER SUPPLY

PERFORMANCE

A. Basic Function:

1. Provide water supply necessary for building occupancy and use.
2. Capacity: Size the water supply in accordance with code.
3. Where water supply elements must also function as elements defined within another element group, meet requirements of both element groups.
4. In addition to the requirements of this section, comply with all applicable requirements of Section 111 - Facility Performance, Section D - Services, and Section D2 - Water and Drainage.

B. Health and Safety:

1. Fire Prevention: Provide independent building water supply with appropriate backflow prevention for fire sprinkler system and standpipes.
2. Disease Prevention: Provide potable water supply with backflow preventers in accordance with code and filtration to remove pollutants. All hose bibs, and janitor closet and lab sink faucets shall have a vacuum breaker or other suitable backflow prevention device.

C. Durability:

1. Expected Service Life Span: 25 years.
2. Wear Resistance: Provide shutoff valves that are resistant to corrosion, breakage, and scratching due to continual contact with water, human usage, and cleaning with abrasive materials.
3. Freeze Protection: Protect piping from freezing by proper pipe routing in conditioned spaces. Provide heat tracing only if necessary to protect piping.

D. Operation and Maintenance:

1. Water Pressure: 80 psi (552 kPa), maximum except as otherwise required by code. or as required by manufacturer for proper fixture operation.
2. Ease of Service: Provide a shutoff valve at the utility service main and the service entry point.
3. Ease of Repair: Do not locate underground piping beneath electrical service, equipment, or footings.

PRODUCTS

A. Pipe:

1. Use one or more of the following:
   a. Polyethylene (PE).
   b. Copper. Only copper piping allowed within building.

END OF SECTION D21

SECTION D22
PLUMBING FIXTURES

PERFORMANCE

A. Basic Function:

1. Provide plumbing fixtures necessary for occupancy, use, and sanitation.

2. Fixtures Required: As specified by code and project program.
   a. Lavatories: At public and private restrooms and bathrooms.
   b. Kitchen Sinks: Double compartment; one in each breakroom.
   c. Mop Service Basin: One in each janitor's closet.
   d. Showers: One in each shower compartment.
   e. Drinking Fountains: Minimum of one on each floor and within 10 feet (3 m) of each restroom.
   f. Utility Water Supply: One in each SU1 space.
      1) Outdoor Supplies: Not more than 100 feet (30 m) apart on building facade and one on each facade of building.
      2) Provide one indoor hose bib in each mechanical room.
      3) Provide freeze proof hydrants at the roof test pads.
   g. For future flexibility, every laboratory not in an office area shall have access to an eyewash and safety shower within the distance specified by Code regardless of the currently identified hazards for that laboratory. .
   h. Laboratory Sinks: Per program requirements.

3. Where plumbing fixture elements must also function as elements defined within another element group, meet requirements of both element groups.

4. In addition to the requirements of this section, the construction will comply with all applicable requirements of Section 111 - Facility Performance, Section D - Services, and Section D2 - Water and Drainage.

B. Amenity and Comfort:

1. Convenience:
   a. Provide comfortable space between and around fixtures.
   b. Provide space between and around fixtures as required by code.
   c. Faucets: Single action operation in the following locations.
      1) Lobby restrooms.
      2) Restrooms.

2. Appearance:
   a. Smooth, corrosion-resistant, non-absorbent, with no crevices to collect dirt.
   b. Aesthetically pleasing and easy and comfortable to use; high style appearance is very important.
   c. Color: White, except where metal fixtures are required.

C. Health and Safety:

1. Burning Hazard: Protect wheelchair occupants from hot water pipes and drains.

2. Emergency Showers, Hand Washes, and Eye Washes:
   a. Supply user with 80 degree F water for 15 minutes.
   b. Locate in accordance with OSHA Standard 1910.151(C) and ANSI Z358.1 (reference 8) and other information supplied with this document. For future flexibility, every laboratory not in an office area shall have access to an eyewash and safety shower within the distance specified by Code regardless of the currently identified hazards for that laboratory.
   c. In order to allow the flexibility to change use in the future, provide a minimum of one eyewash in each laboratory with the exception of the high performance computing data center (HPCDC).

3. Disease and Infection:
   a. All openings and edges around the sides and bottom of each fixture permanently sealed with waterproof material.

D. Structure:

1. Fixtures will be anchored to support weight of fixtures and 500 pounds (225 kg) without failure or stress on the connecting pipes.

2. Wall Mounted Fixtures: Carriers concealed inside fixture and in wall or floor.

E. Durability:

1. Expected Service Life Span of Faucet Valves: 20 years.
   a. Substantiation: Manufacturer's unconditional warranty.

2. Expected Service Life Span of Flushing Mechanisms: 20 years.
   a. Substantiation: Manufacturer's unconditional warranty.

3. Wear Resistance: Use fixtures, trim and accessories that are resistant to corrosion, breakage, scratching, burning, fading and chipping due to continual contact with water, human usage, and cleaning with abrasive materials.

4. Acid resistant finish at lavatories.

F. Operation and Maintenance:

1. Fixture Functions:
   a. Lavatories: Standard spout, with integral overflow, motion sensor activated.
   b. Urinals: Siphon jet flushing action, flush valve operated, motion sensor activated.
   c. Toilets: Wall hung, flush valve, motion sensor activated.
   d. Kitchen Sinks: Swivel spout, water spray nozzle.
   e. Drinking Fountains: With hand operation, foot operation; chilled water service.
   f. Utility (Mop or Janitor's) Sinks: Filling of standard rolling mop bucket required; spout designed to support full bucket of water.

2. Water Pressure/Flow At Fixtures: 30 psi (172 kPa), minimum, except as otherwise required by code.

3. Water Consumption:
   a. Water Closets: 1.6 gallons (6 liters) per flush, maximum, with complete waste removal in one flush. Dual flush volume flush valves encouraged.
   b. Urinals: 0.15 gallon (0.5 liters) per flush, maximum, with complete waste removal in one flush.
   c. Lavatory Faucets in Public Restrooms: 0.25 gallon (0.95 liters) per use.
   d. Lavatory Faucets in Other Areas: 0.25 gallon (0.95 liters) per use.
   e. Shower Heads: 2.5 gallons (9.5 liters) per minute, maximum.
   f. Showers: 2.5 gallons (9.5 liters) per minute.
   g. Drinking Fountains: 0.08 gallons per minute.

4. Ease of Cleaning:
   a. Provide wall-mounted fixtures in public restrooms, for ease of cleaning floors.
   b. Provide adequate access for cleaning each fixture and the areas around it.

5. Ease of Repair:
   a. Faucet valves easily removable and replaceable as a single unit.
   b. Each pipe connection to each fixture provided with a stop valve, for easy disconnection from water service.
   c. Provide access to all concealed connections, such as floor and wall cleanouts and slip-joint connections.

PRODUCTS

A. Utility (Mop or Janitor's) Sinks: (15400)

1. The construction will use one or more of the following:
   a. Precast terrazzo.
   b. Floor-mounted fixtures.

2. The construction will not use:
   a. Wall-hung fixtures.

END OF SECTION D22

SECTION D23
DOMESTIC WATER

PERFORMANCE

A. Basic Function:

1. Provide hot and cold domestic water to plumbing fixtures as required.
2. Domestic water elements comprise the following:
   a. Water Distribution: Piping within the building, serving fixtures and equipment.
   b. Plumbing Equipment: Pumps, tanks, filters, and treatment equipment.
   c. Utility water supply fittings (hose bibs, wall hydrants) are specified in Section D22.
3. Where domestic water elements must also function as elements defined within another element group, meet requirements of both element groups.
4. In addition to the requirements of this section, the construction will comply with all applicable requirements of Section 111 - Facility Performance, Section D - Services, and Section D2 - Water and Drainage.

B. Amenity and Comfort:

1. Location:
   a. Water heaters will be located mechanical rooms.
   b. Do not locate water heaters above ceilings or where the public has access to them.
2. Water Conditioning: Provide water supply with conditioning equipment to remove odors and hardness.
3. Noise:
   a. Design system to prevent noise due to water hammer.
   b. Provide water hammer arrestors for all quick closing valves to eliminate noise produced by the domestic water fixtures.

C. Health and Safety:

1. Excess Pressure Hazard: Include devices to reduce accidental excess pressure to acceptable level, with maximum overpressure of 10 percent over specified system operating pressure, for the following items:
   a. Water heaters.
   b. Hot water storage tanks.
   c. Hot water recirculation pumps.
2. Water Contaminants: Provide filtration device on water supply to the building.
3. Cross-Connection Contamination: Provide appropriate backflow prevention assemblies at the water entry and at all connections to potentially contaminated systems.

D. Durability:

1. Shock Resistance: Do not use cast iron components where thermal or mechanical shock is expected.
2. Moisture: Do not locate water heaters where leakage would cause damage to surrounding building materials, unless drip pans piped to floor drains are provided.
3. Condensation: Provide insulation on cold water pipes, fittings, valves, and equipment to limit condensation.
4. Temperature Changes: Provide method of allowing thermal expansion of domestic water in the hot water system.
   a. Provide expansion tanks with bladders.

E. Operation and Maintenance:

1. Pressure Classification: Provide pipe, pipe components, and equipment with a pressure classification of 125 psi (862 kPA).

2. Energy Efficiency:
   a. Heat Loss: Include insulation to limit heat loss of domestic hot water to a maximum of 2 degrees F (1 degree C) in any 100 feet (30 meters) of pipe, when water is running, and maximum of 2 degrees F (1 degree C) per hour, when water is standing.
   b. Equipment Heat Loss: Include insulation on the following equipment to limit domestic hot water heat loss to maximum of 2 deg F (1 deg C) per hour, without energy input:
      1) Water softeners.
      2) Storage tanks.
      3) Water heaters.
      4) Hot water expansion tanks.

3. Method of Removing Air:
   a. Provide one of the following:
      1) Automatic air vents.
      2) Manual air vents.

4. Water Heating Method:
   a. Provide pre-heating of the domestic hot water utilizing waste heat from the building process loads. Utilize supplemental gas-fired water heaters as necessary.
   b. Substantiation:
      1) Preliminary Design: Analysis and documentation of domestic hot water loads and capacity available from the waste heat system.
      2) Design Development: Hot water calculations and documentation of piping systems.
      3) Construction: Piping pressure test and functional tests of hot water at fixtures.

5. Ease of Service and Maintenance:
   a. Fixture Shut-Off: As specified in Section D22.
   b. Equipment Isolation: Valves on both supply and discharge sides.
   c. Backflow Prevention: Locate assemblies for ease of maintenance and testing (60 inches above finished floor).

6. Meters:
   a. Provide domestic water sub-meters interfaced into the building DDC system for the following systems:
      1) Make-up water for boiler systems
      2) Make-up water for cooling tower
      3) Make-up water for evaporative coolers
      4) Make-up water for autoclaves and lab equipment
      5) Make-up water for DI systems

END OF SECTION D23

SECTION D24
SANITARY WASTE

PERFORMANCE

A. Basic Function:

1. Provide drainage for disposal of waste as required by the code and for the following:
   a. Fixtures and equipment which have a waste connection or a domestic water connection.
      1) Waste connections are not required on refrigerators with icemakers, exterior hose bibs, and coffee makers.
   b. Emergency Drainage: Floor drains located as indicated in the program:
   c. Cleaning Drainage: Floor drains located as indicated in program.
   d. Indirect Drainage: Floor drains to receive piping from:
      1) Equipment drain pans.
      2) Condensate drains.
      3) Other equipment that produces clear wastes.
      4) Other equipment specified to have indirect drain.

2. Where sanitary waste and vent elements must also function as elements defined within another element group, meet requirements of both element groups.

3. In addition to the requirements of this section, comply with all applicable requirements of Section 111 - Facility Performance, Section D - Services, and Section D2 - Water and Drainage.

B. Amenity and Comfort:

1. Convenience:
   a. Do not locate floor drains and floor cleanouts in doorways or directly in traffic paths.

2. Laboratory Drainage:
   a. Provide a waste and vent system for the Laboratory area separate from the remainder of the building. Provide control manholes per section D2.

3. Odors:
   a. The system will not terminate vents within 10 feet (3 m) horizontally of doors, windows, air intake or exhaust openings, or other openings in the exterior enclosure, unless vent termination is at least 3 feet (1 m) above the top of the opening.
   b. The construction will not locate vent openings under overhangs.
   c. The system will not locate vent openings closer than 10 feet (3 m) to lot line.
   d. Vent pipes will be extended at least 6 inches (150 mm) above the surface of roofs.
      1) Exception: Where roof areas are to be occupied for normal building functions, vent pipes will be extended at least 7 feet (2200 mm) above the roof surface.
   e. Vent pipes will be extended at least 12 inches (305 mm) above overflow level of the highest fixture served by the vent.
   f. Provide an automatic means of priming traps which may evaporate enough water to break the trap seal allowing sewer gases to enter the building.

C. Health and Safety:

1. Disease and Infection:
   a. Do not locate indirect drains in toilet rooms, unventilated or inaccessible rooms, or in air distribution or return plenums.
   b. Include a backflow prevention device in the sewer discharge to prevent back-up into plumbing fixtures and floor drains.

D. Structure:

1. Hub-and-Spigot Joint Support: Support joints so they do not separate under weight of pipe or live loads.

E. Durability:

1. Corrosion Resistance:
   a. The piping systems and devices shall be selected for appropriate corrosion resistance. In general, no corrosive agents will be allowed to discharge into the sanitary sewer system from the laboratories.
   b. Oil Interceptors: Provide as required by code.

2. Condensation:
   a. The construction will prevent condensation from forming on or dripping from sanitary drain piping, floor drain bodies, drinking fountain or water cooler waste piping, condensate piping, and p-traps.

F. Operation and Maintenance:

1. Ease of Cleaning:
   a. Floor Drains: At low points in floor and flush with finish floor surface.
   b. Cleanout Plugs: Flush with floor surface.
   c. The construction will include drainage of equipment which produces or collects clear waste, such as condensation from cooling coils. The construction will provide piping for the clear waste to the nearest floor drain.
   d. Indirect Waste Pipes Over 1 inch (25 mm) Diameter: The construction will provide a means to catch and remove solid materials 1/2 inch (12.7 mm) and larger, such as a strainer.
   e. Oil Interceptors: Located in accessible areas.

2. Ease of Maintenance:
   a. Interceptors That Must be Manually Cleaned:
      1) Designed for minimum of 2 months operation between cleanings.
      2) Located close to or in the same area as drains that receive the harmful wastes, for supervision and maintenance by occupants creating the waste.
      3) Removable waste container, with spare.
      4) Substantiation:
         a) Design Development: Manufacturer's maintenance schedule and recommended methods.

PRODUCTS

A. Sanitary Waste and Vent Piping, Buried:

1. The construction will use one or more of the following in laboratories:
   a. Corrosion resistant piping.

2. Within the laboratories, the construction will not use:
   a. Service weight cast iron pipe.

END OF SECTION D24

SECTION D25
RAIN WATER DRAINAGE

PERFORMANCE

A. Basic Function:

1. Provide drainage for disposal of rain water and clear wastes, as required by the code. and as follows:
   a. Drainage of roof areas that do not drain naturally without ponding, including built-in gutters.
   b. Drainage for outdoor areas that are completely surrounded by construction that prevents natural drainage (e.g. areaways) or that are so sloped as to result in accumulation of water or ponding.
   c. Drainage of interior areas where ground water may accumulate naturally, including sump pits and elevator pits.

2. Where rain water drainage elements must also function as elements defined within another element group, meet requirements of both element groups.

3. In addition to the requirements of this section, comply with all applicable requirements of Section 111 - Facility Performance, Section D - Services, and Section D2 - Water and Drainage.

B. Amenity and Comfort:

1. Condensation:
   a. Include insulation of the horizontal and vertical rain water piping, including the underbody of roof drains, using material of sufficient insulating value to prevent condensation.

2. Convenience:
   a. Area drains will be installed flush with the surface on which they are installed, out of pedestrian traffic patterns wherever possible.

3. Odors:
   a. Include traps for all indoor area drains connected to rain water drainage system.

4. Appearance:
   a. Do not locate rain water leaders or downspouts where they are visible from the outside of the building.

C. Health and Safety:

1. Vermin Resistance: Include grated coverings for drains to prevent entry of rodents, insects and birds.

D. Structure:

1. Locate drains to avoid ponding loads in excess of structural capacity.

2. Prevent inadvertent ponding by protecting drain openings from clogging, using raised strainers with minimum height of 4 inches (102 mm) wherever possible and flat gratings in all other locations.

E. Durability:

1. Water Penetration: Weather barrier will be reinforced around drains using extremely durable, permanently watertight material; one acceptable method is using 4 pound (1.8 kg) sheet lead, extending minimum of 10 inches (250 mm) from center of drain.

2. Abuse: Protect drainage conductors and leaders by placing in dedicated locations.

F. Operation and Maintenance:

1. Maintenance of Drainage: Pipes sloped at 1/8 inch per foot (1:100), minimum, downward in direction of flow.

2. Drainage Outlets: As specified in Section D and as follows:

a. Secondary Drainage: The system will drain to completely redundant drain piping system.
b. Scuppers: The system will drain to grade adjacent to building, rain water drainage system, street gutter, or dry well located in landscaped area.
c. Parking and Service Garages: The system will drain floor drains subject to storm water into rain water drains, not into sanitary sewer.
d. Areaways and Courtyards: The system will drain to rain water drainage system, sump pit with pump, dry well located in landscaped area, or water retention pond.

3. Capacity:
   a. Roof Areas of 10,000 sq ft (930 sq m) and Less: Minimum of four roof drains.
   b. Roof Areas of 10,000 sq ft (930 sq m) or More: Minimum of six roof drains.
   c. Areaways and Courtyards: Drainage will not be provided for areas with less than 100 square feet (9 sq m) open to the sky.

PRODUCTS

A. Rain Water Piping:

1. Do not use:
   a. Vitrified clay pipe.

END OF SECTION D25

SECTION D3
HVAC - HEATING, VENTILATING, AND AIR CONDITIONING

PERFORMANCE

A. Basic Function:

1. Provide natural and artificial means of controlling temperature, relative humidity, velocity, and direction of air motion in the interior spaces enclosed by the shell. Provide ventilation to reduce airborne odors, particulates, and contaminant gases.

2. The HVAC system consists of the following elements:
   a. Heat Generation (D32): Elements required to heat building to maintain space comfort.
   b. Refrigeration (D33): Elements necessary to generate the cooling required to maintain building comfort.
   c. Air Distribution (D34): Elements required to distribute air to maintain building comfort.
   d. Hydronic Distribution (D35): Elements required to distribute chilled water and heating water to maintain building comfort.
   e. HVAC Controls (D36): Elements required to control equipment which maintains building comfort.

3. Where HVAC elements also must function as elements defined within another element group, meet the requirements of both element groups.

4. In addition to the requirements of this section, comply with all applicable requirements of Section 111 - Facility Performance and Section D - Services.

5. All mechanical systems and distribution shall be sized with a minimum 25% excess capacity above the peak load for future expansion capability. Peak loads and future capacity shall be reviewed with NREL during preliminary design.
   a. Substantiation: During Preliminary Design, submit loads and one line diagrams of all systems showing equipment and distribution sizing.

6. In general, NREL desires the ESIF to be as flexible as practicable within the scope of the section 5 Programming in the RFP, where new operations or experimental activities can be incorporated within labs with minimal or no retrofitting. Processes or functions that are considered now may not exist throughout the life cycle of the building and new research programs may need to be accommodated in the future. The future use of laboratories is difficult to predict over the life cycle of the building; hence, the laboratories should be designed to maximize flexibility and readily allow retrofitting. Ventilation design depends on the laboratory adjacencies and the overall design concept of the building. While electrical labs at the wind site do not currently have cascading airflow or pressure control, the integration of these laboratory functions into the ESIF and the associated floor plan may present circumstances that necessitate airflow and pressure control designs that are not currently present at the wind site. Design concepts that offer different airflow and pressure configurations for certain laboratories, such as electrical labs, where pressure control is not necessarily a key design issue may be acceptable.

B. Amenity and Comfort:

1. Space Temperature Setpoint: As specified in Section 111 and Section D.

2. Relative Humidity Range: As specified in Section 111 and Section D.

3. Substantiation:
   a. Closeout: Measurement of temperature and humidity in all areas identified in Section D99 as well as all spaces located on a perimeter wall.
      1) One measurement in the summer (outdoor air temperature above 85 degrees F) and one measurement in the winter (outdoor air temperature below 0 degrees F), within first year of occupancy.

4. The preferred HVAC System for the facility is direct/indirect evaporative cooling and/or radiant heating and cooling. Other HVAC systems may be considered to satisfy the space environmental performance criteria defined in the space programming, Section 111 - Facility Performance and Section D - Services.

5. Air handling units shall be located inside the building (not roof top units). Exhaust fans may be located on the roof.

6. Provide separate air handling units for different building occupancy types. Separate units shall be provided for the lab areas, the office areas, and the high performance computing data center.

7. Lab exhaust systems shall have redundant fans (N+1) and controls.

8. Laboratories using chemicals shall have a minimum exhaust rate of 8 air changes per hour at a ceiling height of 10 feet, and shall be pressurized negative relative to its adjacent spaces to approximately negative 0.05 inches of water column. A minimum exhaust rate of 1 cfm/s.f. is acceptable for high bay areas.

9. Variable Air Volume systems are preferred for labs, including hoods and local exhaust.

10. Laboratory exhaust systems and hoods shall comply with all applicable requirements of Section 111 - Facility Performance, Section D- Services, and the following:
    a. Ventilation shall dilute flammable vapor concentrations entering ducts to below 10% of the LEL within the duct system.
    b. Hoods shall be designed to accommodate 100 fpm face velocity. However, hoods can be set to operate at face velocities down to 80 fpm provided containment is verified.
    c. Substantiation: Hoods shall be verified for containment using in-situ testing protocols in accordance with ASHRAE Standard 110.
    d. Cascading pressure relationships shall be maintained, controlled, and monitored. Maintain 0.05 inches w.c. negative between the lab and the service corridor and 0.05 inches w.c. negative between the service corridor and egress corridors, control rooms, and office areas. Any ventilation set-back shall maintain pressure relationships.
    e. Arrange HVAC to mitigate cross drafts on lab hoods.
    f. Laminar flow hoods shall have variable fan speed to balance hood air flow.
    g. Hoods shall be constructed with non-combustible materials or protected with fire suppression.

11. Lab HVAC may be re-circulated within the lab, but not to any other lab.

C. Health and Safety:

1. Backup Power: Provide backup power in accordance with code plus the following equipment:
    a. Cooling equipment (cooling towers, pumps, air handling equipment, etc) serving the High Performance Computer Data Center (HPCDC) as defined by the electrical performance criteria.
    b. Smoke control system components (fans, dampers, etc).
    c. Critical exhaust systems.

2. Smoke Control: Coordinate control of ventilation fans, supply fans, return fans, exhaust fans, and dampers with smoke control system.

3. Refrigerants:
    a. Comply with the requirements of ASHRAE 15-2004.
    b. Prevent release of refrigerant to atmosphere.
    c. Prevent exposure of occupants to hazardous refrigerants.
        1) Substantiation:
            a) Construction: Measurement of refrigerant concentration in mechanical equipment rooms where refrigerants are located.

4. Indoor Air Quality: The design and construction will provide sufficient ventilation to obtain acceptable indoor quality, determined using the Ventilation Rate Procedure of ANSI/ASHRAE 62.1-2004 .

a. Substantiation:
   1) Design Development: Engineering analysis.
   2) Pre-Occupancy: Chemical testing as required by LEED Credit EQ 3.2.

5. Sound Control:
   a. Anticipated noise (and proposed abatement procedures) for air handling units, exhaust stacks, and all noise generating equipment, shall be communicated to NREL during design phase for review and approval. Noise from equipment and air entering interior spaces shall be of such a level that it does not affect ability of occupants to function within spaces or impact surrounding buildings.
   b. Select equipment and devices to meet ASHRAE noise criteria for the occupancy.
   c. Perform base line ambient noise survey at the property line before and after construction.

6. Vibration Control:
   a. Design mechanical systems and select vibration control products in accordance with ASHRAE Applications handbook "Sound and Vibration Control".
      1) Substantiation:
         a) Design Development:
            (1) Submit how equipment will be isolated and provide calculations, details and product data.

D. Operation and Maintenance:

1. HVAC Reliability: Provide multiple pieces of equipment for each system to provide partial redundancy and good part load control.
   a. Substantiation:
      1) Preliminary Design: Identification of design strategies to minimize HVAC disturbances.
      2) Design Documents: Identification of equipment that requires redundancy.
      3) Construction: Functional performance testing.
      4) Occupancy:
         a) If equipment is damaged or malfunctions within one year after completion, reporting of the cause of equipment damage or malfunctions.
         b) Corrective Action: The construction will be modified to provide corrective measures necessary to eliminate equipment damage and malfunctions.
         c) Corrective Action Report: Identification of corrective measures implemented to protect HVAC equipment. Verify that HVAC equipment is operating properly and without damage.

2. Maintenance Access:
   a. Arrange equipment to allow for maintenance access for all equipment including; valves, dampers, motors, fans, coils, pumps, filters, etc. provide tube pull space and isles to move replacement equipment.

PRODUCTS

A. Equipment: Provide equipment suitable for use at the project altitude which is approximately 6,000 ft. above sea level.
B. Air-Handling Units:
   1. Provide large diameter, low-speed, low-horsepower fans capable of maintaining required system static pressure.
   2. Select fans to operate on a stable portion of the curve.
   3. Provide variable speed drives and controls for fans.
   4. Select backward curved wheels where practical. Airfoil blades are preferred.
C. Substantiation:
   1. Preliminary Design: Calculations of system pressures and equipment selection including temperature and altitude correction.
   2. Design Development: Final equipment selection, equipment schedule and air handling unit detail

showing all components and arrangement.

D. Humidifiers: Avoid humidifiers unless required to meet performance criteria of the space. If required use evaporative type.

E. Open centrifugal water chillers are prohibited. These type of chillers require a fan coil unit to offset the heat rejection from the unit and the heat rejection will need to be added as part of the chiller capacity. NREL prefers to not have these types of machines.

END OF SECTION D3

SECTION D31
ENERGY SUPPLY

PERFORMANCE

A. Basic Function:
   1. It is preferred this facility will be heated by the waste heat recovered from the High Performance Computer Data Center (HPCDC). Provide natural gas for use by HVAC, plumbing equipment, laboratory distribution and research boiler as needed.
   2. Substantiation:
      a. Preliminary Design: Identification of each piece of equipment requiring fuel.
      b. Design Development: Distribution system and equipment connections shown on drawings.
      c. Construction: Functional performance testing; proper fuel supply, combustion, and venting.
   3. Where energy supply elements also must function as elements defined within another element group, meet the requirements of both element groups.
   4. In addition to the requirements of this section, comply with all applicable requirements of Section 111 - Facility Performance, Section D - Services, and Section D3 - HVAC.

B. Amenity and Comfort:
   1. Heating: Provide a system to recover waste heat from the HPCDC to be used to heat this building.
   2. Auxiliary Heating: Provide fuel to all fuel burning equipment that is used for research heating needs.
   3. Laboratory Usage: Refer to Section D8 Research Utilities.
   4. Leakage:
      a. Provide leak-free distribution systems.

C. Health and Safety:
   1. System Design Pressure: 125 psig (850 kPa), minimum.
   2. Natural Gas System Working Pressure: 5 psig (34 kPa), maximum.

D. Structural:
   1. Seismic Protection:
      a. Provide fuel distribution system with the ability to flex where differential movement is anticipated.

E. Durability:
   1. Expected Service Life Span: Provide a system which will be viable for the life of building.
   2. Accidental Damage: Protect service meter from accidental damage by installing bollards to stop vehicles.

F. Operation and Maintenance:
   1. System Capacity: Provide a fuel supply line (pipe) with capacity to serve the facility plus 50 percent reserve capacity. Refer to Section D8 Research Utilities and Laboratory D99 Sections.
   2. Ease of Service:
      a. Provide shut-off valves as required by code.

END OF SECTION D31

SECTION D32
HEAT GENERATION

PERFORMANCE

A. Basic Function:

1. Provide the necessary equipment and infrastructure to deliver heat to the conditioned spaces.
2. Where HVAC elements also must function as elements defined within another element group, meet the requirements of both element groups.
3. In addition to the requirements of this section, the construction will comply with all applicable requirements of Section 111 - Facility and Performance, Section D - Services, and Section D3 - HVAC.

B. Amenity and Comfort:

1. Provide a system to recover the waste heat form the High Performance Computer Data Center, to be used to heat this building.
2. Substantiation:
   a. Preliminary Design: Submit system one-line diagrams, HVAC plans and calculations for the system.
   b. Design Development: Submit calculations of heat loss by room, zones and building; capacity of the distribution systems and all heat generating and heat transfer equipment.
3. Provide heating water from the campus heating water loop to be used as supplemental heat, laboratory heating water and temporary heat until the HPCDC is on-line. See section D35 Hydronic Distribution.
4. Provide research boiler and heating water loop. See section D8 Process Utilities. Provide emergency boiler shut down switch per ASME CSD-1

C. Health and Safety:

1. Hazards: Provide boilers and furnaces which safeguard people, property and equipment from the following potential hazards:
   a. Exposure to open flames.
   b. Exposure to hot surfaces.

D. Durability:

1. Boiler Design: Design boilers to conform to construction standards of ASME Boiler and Pressure Vessel Code, Section IV, Rules for Construction of Heating Boilers, latest edition.

E. Operation and Maintenance:

1. Ease of Use: The construction will provide access to and working clearances around heating equipment as recommended by the manufacturer.

END OF SECTION D32

SECTION D33
REFRIGERATION

PERFORMANCE

A. Basic Function:

1. Provide the necessary equipment to generate the cooling required to maintain building comfort. It is preferred to have a significant amount of this facility cooled by direct/indirect evaporative cooling. Provide a connection to the campus chilled water loop for limited chilled water cooling needs and Laboratory chilled water needs.

2. Refrigeration elements comprise water chillers, cooling towers, auxiliary equipment, and evaporative coolers (swamp coolers).

3. Where refrigeration elements also must function as elements defined within another element group, meet the requirements of both element groups.

4. In addition to the requirements of this section, comply with all applicable requirements of Section 111 - Facility Performance, Section D - Services, and Section D3 - Heating, Ventilating, and Air Conditioning (HVAC).

5. The cooling tower manufacturer shall be Tower Tech or equivalent. Cooling towers shall be selected for 3 gpm/ton to qualify for Xcel Energy rebates.

6. Provide low temperature research chilled water system: See section D8 Research Utilities.

B. Health and Safety:

1. Chiller pressure vessels will comply with ASME Boiler and Pressure Vessel Code, Section VIII, Pressure Vessels, latest edition, including both coolers and condensers.

C. Operation and Maintenance:

1. Design Criteria: Provide cooling systems necessary to maintain building comfort and meet all heat rejection needs of the facility.
   a. Substantiation:
      1) Preliminary Design: Estimated cooling loads and design criteria. Submit one line diagrams of all systems.
      2) Design Development: Design calculations and sample manufacturer data showing capacity available. Provide psychomatic analysis.
      3) Construction: Manufacturer's data showing performance, certified by independent testing agency.

2. Energy Efficiency: Operating efficiencies for adiabatic cooling equipment shall be 70 percent minimum.
   a. Substantiation:
      1) Design Development: Manufacturer data showing efficiency available.
      2) Construction: Manufacturer's data showing performance, certified by independent testing agency.

3. Hazards:
   a. Cooling Towers: Provide safe access to all parts that must be serviced, including railings at edges of platforms and cages on ladders.
   b. Where maintenance personnel could be exposed to chemicals during routine maintenance and repair, include all personal safety equipment and clothing necessary for adequate protection.

END OF SECTION D33

SECTION D34
AIR DISTRIBUTION

PERFORMANCE

A. Basic Function:

1. Provide for distribution of air to ventilate and maintain the required space conditions.
2. Where air distribution elements also must function as elements defined within another element group, the construction will meet the requirements of both element groups.

B. Amenity and Comfort:

1. Space Temperature Control: Coordination of air distribution system's design and installation with zoning and space temperature requirements specified in Section D36 - HVAC Controls.
2. Humidity Control:
   a. Provide humidification equipment to maintain space relative humidity requirements per Section D, Service Requirements.
3. Substantiation:
   a. Preliminary Design: Submit Psychrometric analysis and summary of system selection.
   b. Design Development: Equipment schedules, final system plans and coordination of necessary vapor barriers.
   c. Construction: Provide functional testing and measurement that space conditions are met.
4. Air Movement:
   a. Adjustments: Provide an air distribution system which allows relocating supply diffusers, adjusting direction of airflow from supply diffusers, adjusting dampers, and changing the thermostat setpoint.
   b. Substantiation:
      1) Occupancy: Measure air movement at work station in accordance with ANSI/ASHRAE Standard 55-2004 in areas where more than 10 percent of the occupants are uncomfortable and adjust air distribution system to make occupants comfortable.
5. Design Conditions:
   a. Design return air and exhaust systems in accordance with principals of equal pressure drop for all branches of the system.
   b. Provide means for balancing the air systems.
   c. Air monitoring devices shall be multi-point devices that continuously measure total and static pressure.
   d. Face velocities on cooling coils and filters shall not exceed 450 feet per minute.
6. Acoustical Performance:
   a. Air Distribution Background Noise: Provide systems which comply with the acoustical requirements of Section C - Interiors.
7. Cleanliness: Provide filtration of the air distributed to the occupied spaces.
   a. Filter Efficiency: Merv 8 per ASHRAE 52.2-2007.
   b. Provide supplement final filtration and exhaust filtration where indicated in specific Laboratory D99 sections.
8. Odor: Provide exhaust to remove odors and Contaminants as specified in Section 111 and Section D. Provide 3 minute air change in toilet rooms.
9. Appearance:
   a. Diffuser Shape: Provide square diffusers.
   b. Diffuser Face: Provide louvered face diffusers.

c. Linear Diffusers: Provide single slot linear diffusers.
d. Diffuser Color: Provide diffusers with ceiling matching color.

10. Substantiation:
    a. Preliminary Design: Submit calculations with the design of all air handling duct systems. Include calculations for duct sizing, fan sizing, damper sizing, and noise criteria.
    b. Construction Documents: Final ductwork layout, balancing dampers and equipment schedules and details. Updated calculations as required.
    c. Construction: Submit final test and balance reports with all air flows at each air device, pressure drop at each component and pilot traverse at each fan and major duct branch.

C. Health and Safety:

1. Bacterial Growth: Provide humidifiers which do not promote the growth of microorganisms.

2. Electrical Shock Prevention:
    a. Provide a disconnect switch at each motor or powered mechanical equipment.

3. Fire Sources: Provide air distribution elements constructed from incombustible materials.

4. Fire Spread: Provide interlocks to prevent operation or start-up of air distribution elements when fire or smoke detection systems are in alarm condition.

5. For laboratories with hydrogen or other flammable or toxic gases, provide HVAC distribution and exhaust systems that provide uniform supply and exhaust throughout the lab. For gases lighter than air provide high level exhaust. For gases heavier than air provide low level exhaust.
    a. Substantiation - Preliminary Design - Provide Computational Fluid Dynamic (CFD) modeling of a typical laboratory to show air flow patterns within the lab.

D. Durability:

1. Expected Service Life Span: Provide a system which will last a minimum of 20 years in service without major repairs or operating expense.

2. Aesthetic Life Span: Provide units exposed within the occupied space which will not fade, chip, or peal for a minimum of 10 years.

3. Exposed Units within Occupied Spaces: Heavy gage, galvanized sheet steel, painted casing.

4. Accidental Damage: Protect ductwork from accidental damage.

E. Operation and Maintenance:

1. Operating Parameters:
    a. Propeller Fans: Do not use propeller fans at static pressure above 1 inch water gage.
    b. Duct Construction: In accordance with SMACNA HVAC Duct Construction Standards-2005.
        1) Substantiation:
            a) Design Development: Identification of ducts to be tested; all duct systems.
                (1) Allowable Leakage Rate: Definition of leakage rates for each system to be tested.
            b) Construction: Verification of mock-up leakage rate.
                (1) Remedial Action: Replacement of duct whose leakage rate exceeds the allowable leakage rate requirements.
    c. Exhaust ductwork for fume hoods shall be PVC coated galvanized steel or stainless steel.
    d. Air Velocity: 2200 feet per minute (5 m/s), maximum or 0.30 inches of water column pressure drop per 100 feet of ductwork in medium pressure duct and 1600 feet per minute maximum or 0.07 inches of water column per 100 feet of ductwork for low pressure supply ductwork. Return and exhaust ductwork shall be sized for the same maximum velocity of low pressure supply but with a maximum pressure drop of 0.05 inches water per 100 feet.
    e. Fans: Fan pressure characteristics will be matched to the air distribution system pressure

characteristics including the system effect factors; pressure characteristics based on ANSI/AMCA Standard 210-1999 fan ratings and system characteristics based on engineering calculations.

1) Substantiation:
   a) Preliminary Design: Identification of the type of fan to be used.
   b) Preliminary Design: Calculations showing the air distribution pressure characteristics and data supporting the selection of the fan.
   c) Construction: Calculations showing the air distribution systems pressure characteristics; AMCA seal and ratings on each fan used.

2. Ease of Use: Provide units with individual controls coordinated with controls specified in Section D36.

3. Ease of Cleaning: Provide units with removable access panels to allow cleaning and maintenance access.

4. Ease of Maintenance: Provide units which are modular in design. Provide sufficient space for installation and removal of coils.

5. Peak Electrical Demand: Provide variable frequency drives (VFD's) to minimize in-rush current upon equipment start-up. Coordinate control requirements with Section D36 - Controls and Instrumentation.

6. Energy Efficiency:
   a. Substantiation:
      1) Preliminary Design: EER and Energy modelings with summary of energy use for proposed equipment.
      2) Design Development: Manufacturers published EER for equipment selected for this project.
      3) Construction: Equipment with manufacturers label listing EER for equipment.

PRODUCTS

A. Ductwork:

1. Do not use:
   a. Fibrous glass duct.
   b. Flexible duct in excess of 6 feet in length.
   c. Plastic or FRP duct.

END OF SECTION D34

SECTION D35
HYDRONIC DISTRIBUTION

PERFORMANCE

A. Basic Function:

1. Provide for distribution of heating water, chilled water, Waste heat recovery loop, direct/indirect cooling loops, research hydronic systems and process cooling loops to maintain the required space conditions and meet research laboratory needs.

2. Configuration: Use 16 degree F temperature differential (45-61 F typical) for chilled water systems and 30 degree F temperature differential (180-150 degree F typical) on heating water systems.

3. Where hydronic distribution elements also must function as elements defined within another element group, meet the requirements of both element groups.

4. In addition to the requirements of this section, comply with all applicable requirements of Section 111 - Facility Performance, Section D - Services, and Section D3 - HVAC.

5. A pair of 18" chilled water supply/return lines are available on the site. This system does not have chiller capacity to support the cooling needs of ESIF. Provide a connection to this system that is de-coupled from the campus loop. A goal of this project is to not use the campus loop as a permanent means of cooling for the building. Refer to Section D8 - Research Utilities for additional chilled water requirements.

6. Low temperature waste heat supply/return lines are not available on site. Waste heat recovered form the HPCDC and process loads will be used to heat the ESIF facility. However, in the event that a future campus system be installed provide for provisons for supply and return connections that could be used to export waste heat recovered from the HPCDC and process loads. When waste heat cannot be utilized, the system must be capable of rejecting the heat to some other system at ESIF such as a cooling tower.

7. A pair of 18" heating water supply/return lines are available on the site and could be used for temporary heat during initial building start-up prior to the HPCDC being on-line. The HPCDC equipment may be added in phases after NREL occupancy. Refer to section D8 - Research Utilities, for additional heating water requirements.

8. BTU meters will be required for any heating water, chilled water or low temperature waste heat distributed into the building or exported from the building. BTU meters shall match existing NREL standards for the campus which is KEP Supertroll II Flow Computer with Omicron Turbine Flow Meter and shall interface to the site monitorying system.

B. Amenity and Comfort:

1. Space Temperature Control: Coordinate the HVAC distribution system's design and installation with zoning and space temperature requirements specified in Section D36 - Controls and Instrumentation.

C. Health and Safety:

1. Accidental Explosion: Provide pressure relief valves to prevent over-pressurizing the systems.

2. Fire Source: Provide distribution elements constructed from incombustible materials.

D. Durability:

1. Expected Service Life Span: Provide a hydronic system which will last a minimum of 25 years in service without major repairs or operating expenses.

2. Pressure Ratings: Provide hydronic coils with pressure ratings of 450 psig (3100 kPa) and which exceed the pressure rating of the system in which they are installed.

3. Erosion Control: Provide a means of removing air from hydronic distribution systems to prevent erosion. Configure systems in a manner to prevent cavitation.

4. Corrosion Control: The design will provide for drainage of condensate from cooling coils to prevent corrosion of associated equipment.

5. Underground Piping Corrosion Control: Wrap buried piping in a sealed bituminous jacket or other suitable means to protect the piping.

6. Pipe Stress and Strain Control: The design will provide pipe loops, bends, expansion joints, and flexible pipe connectors, anchors and guides to reduce stress and strain due to thermal expansion and contraction.

E. Operation and Maintenance:

1. Operating Parameters:
   a. Pumps: The design will match pump pressure and flow characteristics with the pressure and flow characteristics of the distribution system.

      1) Substantiation:
         a) Preliminary Design: Calculations showing each hydronic system load, pressure and temperature requirements. Identification of the type of pump to be used. Provide one-line diagrams showing all equipment and flow racks.
         b) Design Development: Calculations showing the hydronic distribution water flow and pressure requirements and pump data supporting pump selection.
         c) Construction: Calculations showing the hydronic system pressure requirements; manufacturer's pump curve for each pump used.

   b. Valves: Provide isolation valves for all equipment and at all branches in the distribution system. On piping 3 inches and larger, utilize only butterfly valves. For piping 2-1/2" and smaller utilize ball valves. Automatic flow control valves such as Griswold or Autoflow are prohibited. Temperature control valves may be pressure independent control valves (Delta P or equal). Where balancing valves are needed, provide Bell & Gossett Circuit Setter or FlowSet manual Venturie Balance valves for piping 2-1/2 inch and smaller
   c. Piping: Distribution shall be sized for a maximum pressure drop of 4 feet of head per 100 feet of pipe length and a maximum velocity of 7.5 feet per second. . Flow rates need to include maximum flow at peak load plus 25% for future expansion.
   d. Water Treatment: Provide appropriate water treatment for open loop and closed loop systems. Provide necessary bleed valves, meters, shut-off valves and test stations.

PRODUCTS

A. Hydronic Piping:

1. Do not use:
   a. Grooved mechanical couplings (i.e. Victaulic fittings)
   b. PEX or plastic piping except for in slab radiant heat.

END OF SECTION D35

SECTION D36
HVAC CONTROLS

PERFORMANCE

A. Basic Function:

1. Provide the elements necessary to control and monitor the building's indoor environment and equipment identified in the program and Section D - Services. Control systems at NREL are referred to as DDC (direct digital control), EMCS (energy Management Control Systems) and BAS (Building Automation Systems) in various documents. DDC, EMCS, and BAS may be used interchangeably in many documents, although they have slightly different definitions.
   a. Provide a building control system which controls the indoor environment, manages energy consumption, schedules preventative maintenance, provides feedback for continuous commissioning, provides data for zone level power consumption (electric and utility), controls variable air volume exhaust system in laboratories, integrates fire alarm where required for evacuation and control, monitors fuel consumption, monitors water usage, and monitors packaged equipment controls. Lighting controls may also be integrated. It is intended that there will be display monitors (LCD's) throughout the facility that indicate zone level power usage of the facility at any given time. These will require communication, at some level, between the SCADA control systems and the DDC system. The ESIF itself is an experiment and needs to be monitored as such.
   b. The building control system will be a Delta Controls, Inc direct digital control (DDC) system . There is no substitution for Delta Controls. The system provided for this building shall be compatible with the remainder of the campus controls and shall interface to the campus system.
      1) Provide a temperature and humidity sensor for each zone to maintain the required space conditions.
      2) Provide monitoring and control of all HVAC equipment. A sample points list is included at the end of this section to provide information on the extent of control expected. It is not an all-inclusive list, but a sample of typical points expected for DDC controls in NREL laboratory facilities. Items identified in the sequence of operation as being under DDC control but which are not included in the points list shall be included in the DDC system. The specific design of this system will dictate the points required to provide all of the control, energy management and reporting necessary for the high level of performance demanded by this facility. All sensors on project shall be accurate within +/- 1%. Humidity sensors can be accurate to +/- 3%.
      3) Refer to Section D8-Research Utilities for interface to the Laboratory Supervisory Control and Data Acquisition (SCADA) control system. The building DDC system shall provide monitoring inputs to the SCADA system of all hydronic system interfaces. This communication shall be provided via BacNet (preferred) or MODBUS.
      4) All drawings must be fully integrated into the NREL master set of existing control drawings. This includes using NREL's standard border for drawings, and numbering drawings to match existing master drawing set, as well as updating any impacted existing system drawings with tie-ins or new controls. A complete single set of control drawings must be maintained for this facility.
      5) Dynamic color graphics shall be provided for each mechanical or controlled system, including air handling systems, chilled water systems, hot water systems, other mechanical systems and specialty systems associated with the DDC system, and floor plans with zone level temperature controls.
      6) Connect the DDC system to the existing NREL network. Ethernet communication is acceptable within a building. Fiber optics communication is required between buildings. Controls contractor required to verify existing fiber lines, or provide fiber lines for this communication.
      7) Laboratory personnel will have full access to program, etc. the SCADA systems in their

respective areas, but will not have access beyond viewing capability, to the DDC system.
8) The DCC system, components and network devices will be on the backup power system.

c. Where control and instrumentation elements also must function as elements defined within another element group, meet the requirements of both element groups.

d. In addition to the requirements of this section, comply with all applicable requirements of Section 111 - Facility Performance, Section D - Services, and Section D3 - HVAC.

B. Amenity and Comfort:

1. Zoning and Space Temperature Control:
   a. Dedicated terminal unit and temperature sensor for each separated space.
   b. Dedicated terminal unit and temperature sensor for each corner space.
   c. Single temperature sensor and terminal unit for spaces with similar function, exposure, and location.
      1) Interior spaces will be zoned together, separate from exterior spaces.
      2) Exterior spaces will be zoned together, separate from interior spaces.
      3) Zone each conference room, separately. The construction will dedicate at least one terminal unit and temperature sensor to each zone.
      4) Provide each IT room with a dedicated control.
      5) Provide each electrical room with a dedicated control.
      6) Provide zone level controls which will reduce total building energy usage when individual zones are occupied at less than design conditions.
      7) Substantiation:
         a) Preliminary Design: Plans indicating occupancy types with special HVAC requirements shown. Submit control schematics for all systems and sequences of operation.
         b) Design Development: Documents showing zoning, equipment locations, and air distribution. Equipment cut sheets.
         c) Construction Documents: Final control schematics and sequences of operation.
         d) Construction: Report conforming to AABC Test and Balance Procedures - 2005 or NEBB procedures. Provide performance verification test that the systems perform as designed and performs the correct sequence of operation. Provide NREL training in the operation and maintenance of the system.
         e) Commissioning: Provide point to point testing of all equipment devices and graphics and commissioning in accordance with Section 8-Design and Construction Procedures.
   d. Building Control System: Provide a central location to monitor and control each zone setpoint.

C. Health and Safety:

1. Life Safety: Provide interconnection and coordination of HVAC controls with other life safety systems.

2. Fire Sources: Provide products which are rated for the specific locations where they are installed.

3. Control system needs to conform with redundancy requirement. Redundant systems shall have control system installed so that no single point of failure of controls will prevent back-up system from operating.

4. Provide alarming and safety shutdown functions for HVAC equipment failures, freeze-stat alarms, smoke alarms, gas detection, fume hood alarms, laboratory pressure alarms and other similar alarms.

D. Durability:

1. Expected Service Life Span: Provide a system which will last a minimum of 10 years in service without major repairs or operating expense.
   a. Substantiation:
      1) Design Development: Identification of a similar system in use in an existing facility for 5 years and manufactured by the existing controls system manufacturer.
   b. Accidental Damage: Protect temperature sensors and other devices from accidental damage.

E. Operation and Maintenance:

1. System Capacity: The construction will provide a building control system with sensors and points to perform as specified and add expansion capability for 30 percent more points in each controller.

2. Ease of Use:
   a. Locate field panels in mechanical rooms.
   b. Locate the central controller in the maintenance office.
   c. Provide a system which is user programmable.
   d. Provide field panels which are independent and do not need the central controller to continue functioning.
   e. Ease of Service:
      1) Provide a system of modular design.
   f. Allowance for Change and Expansion: Provide a building control system which is expandable to meet future needs.
      1) Spare Capacity: Provide sensors and points required to perform as specified and add expansion capability for 30 percent more points in each controller.
      2) Provide separate devices and control sequences for each HVAC component. Shared points are not allowed.
   g. Energy Efficiency: Provide the following control functions or features:
      1) Holiday scheduling.
      2) Night setback, with manual override capabilities.
      3) Outside air economizer.
      4) Waterside economizer.
      5) Boiler staging.
      6) Boiler optimization.
      7) Chiller staging.
      8) Optimum start.
      9) Optimum stop.
      10) Chilled water temperature reset.
      11) Heating water temperature reset.
      12) Cooling tower staging.
      13) Variable speed pumping.
      14) Demand limiting and load shedding.
      15) BTU meters for interface to all campus hydronic systems
      16) Domestic water sub-meters for all make-up water needs.
      17) Potential Interface to lighting control system
      18) Variable laboratory exhaust
      19) Variable speed air distribution

3. DDC Sample Point List of Mechanical and Electrical Systems. This list provides guidance to the level of controls expected, but does not provide an all-inclusive list of points expected in the ESIF.
   a. Building chilled water system:
      1) CHWS Flowrate gpm
      2) CHW pump status (VFD) on/off
      3) Pump Load %
      4) CHWS temp deg F
      5) CHWR temp deg F
   b. Cooling Tower:
      1) Fan status (VFD) on/off
      2) CW Leaving temp deg F
      3) CW Entering temp deg F
      4) Bypass valve position %
      5) Condenser pump status on/off

	6)	Sump temp	deg F
c.	Building hot water system/lab boilers		:
	1)	Lead/Lag status of boiler	
	2)	Primary pump status (VFD)	on/off
	3)	Firing rate status	%
	4)	Primary HWS temp	deg F
	5)	Primary HWR temp	deg F
	6)	Secondary pump status (VFD)	
	7)	Secondary HWS flowrate	gpm
	8)	Secondary HWS temp	deg F
	9)	Secondary HWR temp	deg F
	10)	System load BTU	
	11)	Secondary pump load	%
	12)	Boiler efficiency	%
d.	Water Economizer - Building Free Cooling		
	1)	CWS temp	deg F
	2)	CWR temp	deg F
	2)	CHWS temp	deg F
	4)	CHWR temp	deg F
	5)	Heat exchanger pump speed (VFD)	%
e.	Water Economizer - Process Chilled Water		
	1)	CWS temp	deg F
	2)	CWR temp	deg F
	3)	Process water flowrate	gpm
	4)	CHWS temp	deg F
	5)	CHWR temp	deg F
	6)	Heat exchanger pump speed	%
f.	Lab Exhaust Fans:		
	1)	Air flow (air flow station)	cfm
	2)	Duct static pressure	in. wc
	3)	Plenum static pressure	in. wc
	4)	Exhaust fan load	%
	5)	HRC supply temp	deg f
	6)	HRC return temp	deg f
	7)	HRC flowrate	gpm
	8)	Heat Recovery Coil valve position	%
	9)	Heat recovery coil Supply temp deg F	
	10)	Heat recovery Coil Return Temp	deg F
g.	Lab Makeup Air Units:		
	1)	Supply fan load (VFD)	%
	2)	Air flow (air flow station)	cfm
	3)	Supply air temp after fan discharge	deg F
	4)	Discharge static pressure	in. wc
	5)	Duct Static Pressure	in. wc
	6)	Leaving RH	%
	7)	Inside RH	%
	8)	Outside RH	%
	9)	Cooling Coil valve position	%
	10)	CHW Coil Supply temp	deg F
	11)	CHW Coil Return temp	deg F
	12)	Heat Recovery Coil valve position	%
	13)	Heat recovery coil Supply temp	deg F
	14)	Heat recovery Coil Return Temp	deg F

15)	Gas Heat Status	on/off
16)	Evaporative Cooling pump status	on/off
17)	HRC supply air temp	Deg F

h. Labs – typical:

1)	Supply air flow	cfm
2)	Exhaust air flow	cfm
3)	Fan coil units	on/off
4)	Fan coil units heating or cooling mode	hw/cw
5)	Space temperature	deg F
6)	Space humidity	%
7)	Variable exhaust system controls	

i. Office AHU-1:

1)	Supply fan load	%
2)	Supply air temp	deg F
3)	Outside air temp	deg F
4)	Return air temp	deg F
5)	Mixed air temp	deg F
6)	Discharge static pressure	in. wc
7)	Underfloor Static Pressure	in. wc
8)	Leaving RH	%
9)	Return air RH	%
11)	Cooling Coil valve position	%
12)	CHW Coil Supply temp	deg F
13)	CHW Coil Return temp	deg F
14)	Heating Coil valve position	%
15)	HW Coil Supply temp	deg F
16)	HW Coil Return Temp	deg F
17)	Mixed air damper position	%
18)	Return air damper position	%
19)	Relief air damper position	%
99.	Outside air damper position	%
20)	Evaporative Cooling pump status	on/off

j. Office – typical:

1)	VAV unit - damper position	%
2)	VAV unit - heating or cooling mode	hw/cw
3)	Fancoil unit - fan status	on/off
4)	Fancoil unit - heating status	on/off
5)	Space temperature	deg F
6)	Space humidity	%

k. Lighting Controls (Possible):
   1) Occupancy sensor
   2) Photo cells in daylight areas
   3) Dimmable ballasts in lab areas
   4) Status of lights

l. Zone Level energy use:
   1) Electric meters at panel level
   2) BTU meters

END OF SECTION D36

SECTION D4
FIRE PROTECTION

PERFORMANCE

A. Basic Function:

1. Provide services systems to protect life and property.

2. Fire protection comprises the following elements:
   a. Fire Sprinkler and Extinguishing Systems D41: Elements which automatically extinguish fires.
   b. Standpipe and Hose Systems D42: Elements that deliver adequate supplies of water to locations in the building for manual fire-fighting.
   c. Fire Detection and Alarm D43: Elements required to detect fires and communicate fire location to building occupants, building management, and public fire fighting agencies.
   d. Fire Protection Specialties D45: Elements required for manual fire-fighting by occupants.

3. The construction will provide automatic fire suppression for the entire building.

4. Water Use:
   a. Provide a permanent water supply for standpipes as required by code.
   b. Provide a water supply to sprinkler systems that is sufficient to extinguish fires inside the structure.

5. Where fire protection elements also must function as elements defined within another element group, meet the requirements of both element groups.

6. In addition to the requirements of this section, the construction will comply with all applicable requirements of Section 111 - Facility Performance and Section D - Services.

7. The level of fire protection for the ESIF will fulfill the requirements of the best-protected class of industrial risks (i.e., "Highly Protected Risk" or "Improved Risk"). This includes meeting the applicable building codes and National Fire Protection Association standards, or exceeding them when necessary to meet risk objectives established by the Laboratory. The applicable codes and standards are those in effect when facility design commences ("code of record").
   a. Highly Protected Risk: A physical property characterized by a level of protection, including fire protection systems and management controls, sufficient to fulfill the requirements for the best protected class of industrial risks. Highly protected risk criteria are established by the commercial insurance industry.
   b. Fire Protection: The building shall be equipped with a NFPA-72 compliant fire detection and alarm system. The design objective is 100% detection coverage per that standard. The facility shall be protected (100% coverage) by a fire sprinkler system compliant with NFPA 13, designed to achieve, at a minimum, Ordinary Hazard Group 2 discharge requirements for non-office areas and ordinary hazard Group 1 for office areas. Extra hazard discharge densities as defined in NFPA-13 shall be employed based on hazards in each area. Unless otherwise specified, provide a wet pipe system.
   c. Provide a pre-action fire sprinkler system for the High Performance Computer Data Center (HPCDC) and all laboratories that contain the Research Electrical Distribution Bus (REDB). (not required for corridors or electrical room where the REDB just passes through) Provide a dry pipe system for areas subject to freezing. Provide a high sensitivity early warning air sampling type fire detection system in the HPCDC. The conventional fire detection system in the HPCDC will be used to activate the preaction fire sprinkler system.
   d. System Criteria and Design: NREL fire protection criteria evolves to reflect technological advances in fire protection and to maintain the characteristics of an HPR. Fire protection designs must incorporate state-of-the-art equipment that has been listed or tested by a nationally recognized test laboratory such as Underwriters Laboratories (UL) or Factory Mutual (FM). Fire protection components must be compatible with existing NREL equipment and installed as

required by the applicable NFPA codes and standards.

B. Amenity and Comfort:

1. Leakage: Provide systems that are leak-free.
2. Accessibility: Provide clearances around system components for service and use.
3. Sound: Provide audible alarm system to signal building occupants of fire hazard.
4. Convenience: Provide an automatic system to signal building occupants of fire.
5. Hazards: Provide systems which minimize risk of injury and damage to property.
6. Substantiation:
   a. Preliminary Design: Fire protection areas identified. Show fire department connection, fire hydrants and post indicator valves on the site. Indicate head type design density, system type (wet, dry, preaction) and fire entry room layout.
   b. Construction Documents: Fire protection zones indicated on the drawings with riser locations identified. . Provide fire entry room layout and piping detail. Provide specifications for complete system.
   c. Construction: Fire protection shop drawings including pipe size, routing, hydraulic calculations, head layout and equipment product data. Functional performance testing in accordance with code.

C. Health and Safety:

1. Path of Egress: Provide systems which safeguard path of egress.
2. Fire Source: Provide system materials which do not contribute to the spread of the fire.
3. Fire Spread: Provide systems which control spread of fire throughout facility.
4. Smoke Control: Provide a system to evacuate smoke after fire has been extinguished. After contract award coordinate with NREL Engineering and ES & H to determine final requirements of smoke control for this building..
5. Chemical Exposure or Use: Provide systems which limit exposure of occupants to extinguishing agents.

D. Structural: Seismic Design: Provide support systems which comply with the International Building Code for the Seismic Design Criteria for this facility.

E. Durability:

1. Corrosion Resistance: Use corrosion resistant materials for dry type systems or pre-action systems; ferrous metal is not considered corrosion resistant unless it is hot dipped galvanized, chrome plated, or coated with rust inhibitive paint.

F. Operation and Maintenance:

1. Ease of Use: Provide easy access to and working clearances around system components.
2. Unauthorized Use: Provide systems which minimize activation and use by unauthorized persons.
3. Substantiation:
   a. Preliminary Design: System layout indicating operator interface locations.
   b. Design Development: System equipment locations indicated on the drawings and manufacturer's product data indicating products to be used.
4. Performance flow test to determine design criteria for static pressure and residual pressure.
5. Provide a listed alarm check valve interfaced to the fire alarm system at the fire entry.

6. Fire sprinkler water distribution shall be of the looped and gridded type providing two-way flow with sectional valving.
7. Paint all exposed internal fire protection piping "PP6 OSHA Standard Red".

END OF SECTION D4

SECTION D41
FIRE SPRINKLER AND EXTINGUISHING SYSTEMS

PERFORMANCE

A. Basic Function:

1. Provide fire sprinkler or fire extinguishing systems for all interior spaces. System for high performance computing data center and laboratories which contain the REDB shall be a pre-action type.
   a. Pre-action system shall not be monitored by the Vesda System, but by standard devices.
2. Provide wet pipe sprinkler systems unless otherwise indicated or required by code.
3. Spaces and Areas with Fire Sprinklers:
   a. General Use (Not Indicated As Another Type): Wet pipe.
4. Fire Sprinklers: Design and construction in accordance with code and NFPA 13-2007.
5. Standpipes and Hoses: Design and construction in accordance with code and NFPA 14-2007.
6. In addition to the requirements of this section, comply with all applicable requirements of Section 111 - Facility Performance, Section D - Services, and Section D4 - Fire Protection.

B. Amenity and Comfort:

1. Accessibility:
   a. Provide fire department connections as required by code.
   b. Provide a hose cabinet at the end of each corridor as required by code.
2. Appearance:
   a. All spaces unless indicated otherwise on the drawings: Concealed sprinklers.
   b. Provide hose cabinets with bright-chrome finish and solid metal door panel.
   c. Provide valves with bright-chrome finish.
   d. Provide fire department connections with bright-chrome finish.
3. Convenience: Provide fire department connections for each standpipe as required by code.

C. Health and Safety:

1. Nozzle Performance: As required by code and NFPA 17-2002.
2. Sprinkler Head Performance: As required by code and NFPA 13-2007.
   a. Flammable Storage Room: ESFR sprinklers.
   b. Laboratory: ESFR sprinklers.
3. Water Demand Requirements:
   a. Determine minimum water supply requirements for each sprinkler system using the hydraulic calculation method defined by NFPA 13-2007.
   b. Substantiation:
      1) Preliminary Design: Identification of water source.
      2) Design Development: Water supply for sprinkler systems shown on the drawings.
      3) Fire Protection Shop Drawings: Complete system layout showing all piping, devices and components. Provide hydraulic calculations and product data cut sheets. Show coordination with ceiling, ductwork, lighting and structure.
      4) Construction: Tests of each sprinkler system in accordance with the requirements of the design standard.
4. Water Source:
   a. If necessary to meet flow and pressure requirements, provide fire pump designed in accordance with NFPA 20-2007. If a fire pump is needed, it shall be equipped with back-up power from the

generator.

b. Provide water from a public service main.

5. Provide fire spinklers for all flammable-gas storage cabinets.

D. Structural:

1. Seismic Design:
   a. Provide a sprinkler system which allows movement where differential movement is anticipated.
   b. Provide sprinkler system supports capable of supporting twice its installed wet weight.

E. Durability:

1. Expected Service Life Span: Provide a sprinkler system which will last a minimum of 20 years in service without major repairs or operating expense when maintained as specified in NFPA 25-2002.
   a. Substantiation:
      1) Preliminary Design: Identification of the system type to be installed.
      2) Design Development: Identification of a similar system in use in an existing facility for 3 years and consisting of components from the same manufacturers.

F. Operation and Maintenance:

1. Provide sprinkler system and fire pump maintenance in accordance with NFPA 25-2002.

2. Ease of Service:
   a. Spare Sprinkler Heads: Provide additional sprinkler heads as required by code to service the system.

END OF SECTION D41

SECTION D43
FIRE DETECTION AND ALARM

PERFORMANCE

A. Basic Function:

1. Provide automatic fire detection and automatic alarm systems as required by code and as follows:
   a. Provide service systems to protect life and property to all locations in the building in compliance with NFPA 72 and West Metro Fire Protection District. The system will provide code required necessary fire and smoke detection. Each and all items of the Fire Alarm System shall be UL listed and a product of "SimplexGrinnell" as the fire alarm system manufacturer.
      1) Provide elements required to detect fires and smoke (automatic and manual detection) and communicate fire location to building occupants (e.g. fully addressable), building management, NREL security, and public fire fighting agencies.
      2) All fire alarm detection devices shall be fully addressable.

2. Integrated systems performing all functions will be provided to the extent possible, subject to requirements of code for separated, independent systems.

3. Where fire detection and alarm elements also must function as elements defined within another element group, meet the requirements of both element groups.

4. In addition to the requirements of this section, comply with all applicable requirements of Section 111 - Facility Performance, Section D - Services, and Section D4 - Fire Protection.

5. Substantiation:
   a. Preliminary Design: Outline description of systems, inter-system interfaces, and functions provided.
   b. Design Development: Details and locations of each type and locations of input and output device; capacities of systems; manufacturer data.
   c. Construction Documents: Detailed layout of input and output device locations. Descriptions of interconnections with other systems.
   d. Closeout: Complete functional performance testing as specified in Section 8.9, under Commissioning.

B. Amenity and Comfort:

1. Accessibility: Comply with requirements of local authorities for facilities for the disabled.

2. All fire alarm cabinets shall be located in a fire alarm command center, electrical room, or as required by authorities having jurisdiction. Locate either main FACP or annunciator panel in main lobby.

C. Health and Safety:

1. Detection, Alarm, Notification Methods: In accordance with NFPA 72-2007 or latest edition.

2. Evacuation Plan: Multiple smoke zones and alarm notification of any zone or combination of zones in addition to general evacuation of entire premises.

3. Detection:
   a. Air Handling Units Over 2,000 cfm (3360 cu m/h): Minimum of one detector in both supply and return.
   b. Upon detection of fire or smoke condition, automatic notification of occupants.
   c. System shall comply with requirements of "full detection".
   d. Provide UV/IR detection in all areas of hydrogen production compression and fuel dispensing. Provide in both indoor and outdoor installations. Output of UV/IR detection shall shut-down hydrogen flow and shut-down hydrogen production and compression equipment, as well as alarm

the fire alarm system.

e. Provide a high sensitivity air sampling smoke detection system (VESDA or equal) for the High Performance Computing Data Center (HPCDC).

4. Alarms:
   a. Means for occupants to communicate same types of alarm as automatic system does by locating a connection to phone or paging system near the main fire alarm control panel..
   b. Manual stations at minimum of 150 feet (45 m) intervals along means of egress paths.
   c. Audible Alarms: Minimum of 15 dB over ambient noise, audible throughout common areas and means of egress.
   d. Visual alarms, in locations required by ADA and NFPA 72.
   e. Separate audible and visual signals for alarms and trouble notification in the fire alarm control panel.

5. Fire Protection Controls:
   a. The construction will provide connections between alarm and detection system and fire suppression system activation sensors.
   b. Upon Alarm: Shut down or deactivate the following:
      1) HVAC air distribution as necessary for fire and smoke control. If areas have dedicated exhaust that does not impact other areas and they are not in the affected area it is preferable to maintain relative differential pressures.
      2) Elevators (fire emergency service).
      3) Fire-rated door hold-opens.
      4) Locks restricting exit through doors constituting means of egress.

6. Audible and visual trouble notification of operations staff, for alarm zone failures, annunciator zone failures, ground faults, backup power failure, water supply equipment failures.

7. Error and Failure Prevention: Hard wired system; "tamper" sensors at sensitive points; products of only one manufacturer or certified by manufacturer as compatible.

8. Substantiation:
   a. Construction or Closeout: Functional performance tests approved by code authorities.

D. Operation and Maintenance:

1. Power Supplies:
   a. Building power with power line conditioner for all systems.
   b. Dedicated Battery Backup Power: For:
      1) Fire safety systems, 90 hours of supervisory and 10 minutes of alarm. Provide 15 minutes of alarm if a voice system is used.
      2) If voice emergency communication is required for the fire alarm system, the system shall be capable of communication for 90 minutes.

2. Ease of Use:
   a. Minimum of one centralized monitoring display for all systems will be provided entrance lobby or vestibule.
   b. All fire alarm wiring shall be run in conduit.

3. NREL Personnel Training: As specified in Section 8.9.
   a. Operational: Minimum of 8 hours, for 1 person, for each separate system.
   b. Maintenance: Minimum of 8 hours, for 1 person, for each separate system.

END OF SECTION D43

SECTION D45
FIRE PROTECTION SPECIALTIES

PERFORMANCE

A. Basic Function:

1. Provide equipment and fixtures to facilitate manual fire-fighting in accordance with the code. Also, provide flammable liquid and flammable gas storage cabinets (not less than 10 of each). Refer to program for locations/types/sizes. Flammable gas storage cabinets to have self-closing doors and painted yellow.

2. Fire protection specialties comprise the following elements:
   a. Fire extinguishers.
   b. Cabinets for storage.

3. Provide portable fire extinguishers throughout the facility, of the type and size and in the locations required by NFPA 10-2007. All laboratories shall be equipped with fire extinguishers located adjacent to the exits and as required by code.

4. Provide portable fire extinguishers as follows:
   a. Typical: Ammonium Phosphate Extinguishers: 4-A:40-B:C, cartridge activated, located at all locations unless otherwise indicated.
   b. For Locations with Unusual High Hazard Where Standard ABC Extinguishers is Not Appropriate: As recommended by authority having jurisdiction.

5. Where fire protection specialty elements also must function as elements defined within another element group, meet the requirements of both element groups.

6. In addition to the requirements of this section, the construction will comply with all applicable requirements of Section 111 - Facility Performance, Section D - Services, and Section D4 - Fire Protection.

7. Substantiation:
   a. Design Development: Types, locations, and calculations of travel distances.

B. Amenity and Comfort:

1. Appearance: Extinguishers installed in wall-mounted brackets will not be used except in SU Spaces.

C. Health and Safety:
1. Accident Prevention:
   a. Locate extinguishers and cabinets so that means of egress is not impeded, in accordance with code. Locate adjacent to exits and as required by code..
2. Fire Safety: Extinguishers will be mounted in permanent location using mounting fixtures that will inhibit casual removal but allow ready use in case of fire.

D. Durability:
1. Expected Service Life Span: Same as life span of building.
2. Durability: As specified for interior fixtures in Section C.

E. Operation and Maintenance:
1. By-Products: Selection of extinguishing agent will minimize adverse effects of use on building equipment and finishes.
2. Ease of Use: For extinguishers intended for the use of occupants other than trained fire brigade members, weight (mass) of extinguisher will not exceed 12 pounds (5.5 kg).
3. Ease of Alteration: Locate extinguishers and cabinets so that minor relocation of rooms and spaces normally expected during occupancy by the same tenant do not result in violation of the location requirements of NFPA 10-2007.

END OF SECTION D45

SECTION D5
ELECTRICAL POWER

PERFORMANCE

A. Basic Function:

1. Provide electrical power with the appropriate characteristics to operate all electrically operated devices, including those in other services.
   a. Power Monitoring: The ESIF shall be designed to be a living laboratory. Provide a complete system capable of monitoring power (kW), 15 minute demand, energy consumption (kWh), energy production (kWh) from PV system and other forms, voltage, current, power factor, and power quality for this service (at the main services and specific zones throughout the building - office space, individual lab space, HPCDC, etc.). This information can then be used to test operational strategies for power consumption within the building. Provide a system that is compatible in all respects, including equipment and software, with the General Electric PQM monitoring system presently in use on NREL's campus. Include remote devices for monitoring and protective functions; device communication interface hardware; inter-communication wiring; analysis software; and accessories as specified and indicated. General Electric (GE) Multilin instruments shall be an acceptable alternative to model PQM instruments. Building power use shall be monitored at the BAS and shall separately meter lighting, HVAC, all other and receptacles loads for both normal and emergency systems. See HPCDC for requirements on metering the computing center.
   b. The metering will report to the building automation system and will be totaled into normal lighting, normal receptacles, normal HVAC, normal other loads, EM lighting, EM receptacles, EM HVAC, and EM other. The Contractor shall be responsible for all interconnections and interfacing between meters and the building automation system.

2. The electrical system shall provide all connections for a complete function system and shall comprise the following elements:
   a. Electrical Energy Generation (D51): Utility power sources, engine-generator systems, battery power systems, uninterruptible power supply systems and unit power conditioners.
   b. Service and Distribution (D52): Service entrance equipment, distribution equipment, transformers, motor control equipment, service and feeder wiring (conductors and raceways), monitoring, safety and control equipment, and other elements required for a complete functional system.
   c. Branch Circuits (D53): Branch circuit wiring and receptacles and other branch circuit wiring systems.

3. Where electrical power elements also must function as elements defined within another element group, meet the requirements of both element groups.

4. In addition to the requirements of this section, the construction will comply with all applicable requirements of Section 111 - Facility Performance and Section D - Services.

5. Substantiation:
   a. Construction: Conduct continuity test of wiring systems prior to functional performance test. Conduct functional performance test of wiring systems.

6. Contact utility company prior to start of design and incorporate all requirements associated with parallel utilities and buy/sell metering into the design. Buy/sell metering is required at the REDB.

7. Provide short circuit studies as well as arc flash labeling on all panel boards, switchgear, switchboards, and transformers.

8. Provide conduit labeling every 20 feet and on each side of walls. Normal power labeling shall be black and emergency labeling shall be red. Labels shall contain panel/switchboard information as well as

circuit information. Label all bus ducts in similar manner.

B. Amenity and Comfort:

1. Convenience:
   a. Locate metering and monitoring facilities in a single location not in a mechanical equipment room.
   b. Provide means of recording power meter and demand meter readings continuously in hard copy printout.
   c. Provide means to collect power meter and demand meter data from the various locations to a central building energy management system. This information shall also be able to be seen in the electrical visualization lab.

C. Health and Safety:

1. Electrical Hazards: The construction will be in compliance with all NFPA standards that apply to the occupancy, application, and design.
   a. Provide controlled access to spaces housing electrical components and allow access only by qualified personnel.
   b. Provide electrical distribution equipment with locking cabinets, doors, and panels for "lock-out" safety procedures in accordance with NREL's safety standards.
   c. Hazardous Locations: Comply with code.
   d. Provide emergency power off (EPOI) devices at all labs served by the REDB. EPO buttons shall be fail-safe and equipped with protection against inadvertent activation.
   e. Lab doors shall be interlocked during high hazard testing and a warning light shall be installed outside of the door to be activated during testing.

2. Emergency Systems: Provide backup power when normal power is interrupted, as defined in Section D51.

3. Hazardous Locations: Comply with requirements of NFPA 70-2008 chapter on Hazardous (Classified) Locations, in the following areas:
   a. Flammable liquid storage.
   b. Chemical storage.
   c. Bottled gas storage.
   d. Where required by code.
   E. As defined in Section D99.
   f. Areas of hydrogen distribution, production, and use.

D. Durability:

1. Moisture Resistance: Water-resistant equipment includes transformers, raceways, enclosures, panel boards, and switchgear.

2. Enclosures: As required to protect equipment from environment in which it is installed, complying with NEMA 250-2003 and:
   a. Areas to be Hosed-Down, or Equivalent, Exterior or Interior: Type 4.
   b. Exterior, Exposed to Weather and Wind: Type 3S.
   c. Exterior, Other Locations: Type 3R.
   d. Interior, subject to settling duct, falling dirt, and dripping liquids: Type 5.
   e. Interior, subject to circulating dust: Type 12.
   f. Interior, Other Locations: Type 1.

E. Operation and Maintenance:

1. Capacity: Calculated in accordance with NFPA 70-2008 or latest adopted section.

2. Power Consumption and Efficiency:

a. Comply with requirements of IEEE Standard 739-1995.
b. Comply with requirements of ASHRAE 90.1- latest edition.
c. Metering: Provide meters to separately measure power consumption of lights, receptacles, and HVAC systems, and other loads in both normal power and emergency systems.

3. Load Characteristics:
   a. Maximum Harmonic Current Distortion: Plus or minus 2 percent of design current.
   b. Transient Suppression: The construction will limit voltage transients below damage curve of the electrical system and connected equipment.

4. Protection against Disturbances:
   a. Provide circuits which serve sensitive electronic equipment with electrical characteristics within the ranges defined in IEEE Standard 1100-2005 and as follows.
   b. Noise Protection: Limit frequency excursions between 90 to 110 percent of design frequency.
   c. Surge Protection: Voltage excursion limit of 2 times design voltage.
      1) Provide protection of the circuits as follows:
         a) Receptacles serving personal computer terminals.
         b) Receptacles serving network servers.
         c) Power supply to fire alarm panel.
         d) Power supply to telephone system.
         e) Power supply in the laboratory.
         f) Motors over 5 horsepower.
      2) Substantiation:
         a) Preliminary Design: Identification of circuits that require surge protection.
         b) Design Development: Description of surge protection devices to be used.
         c) Construction: Measurement of voltage excursions on protected circuits.

5. General Receptacle System Voltage: 208Y/120 volts/3-phase/60 Hz.
   a. Equipment Voltage: 480 volts/3-phase/60 Hz or as required.

6. Ease of Use:
   a. Configuration: Provide wiring and protective devices so that outages caused by local overloads do not affect unrelated areas or systems.
   b. Motor Control: Provide motors with the appropriate protective, control, and indicating devices.
   c. Locate monitoring read-out at one central location.
   d. Monitoring: Provide local and remote monitoring of the following:
      1) Switchboard Monitoring:
      2) Locate monitoring read-out at one central location.
      3) Panel board Monitoring:
         a) Energy Readings of: KW, KVA, Volts, Amps, PF
         b) Real-Time Readings of: KW, KVA, Volts, Amps, PF
         c) Demand Readings: KW, KVA, Volts, Amps, PF
      4) Motor Control Center Monitoring:
   e. Voltage Regulation: Within 3 percent of design voltage at all branch receptacles.

7. Availability: Provide an electrical system which is available to deliver power at least 99 percent of the time.

8. Reliability Indexes:
   a. System Interruption Frequency: Calculated in accordance with IEEE 493-1997.
   b. Substantiation:
      1) Design Development: Reliability evaluation calculated using the "minimal cut-set method" described by IEEE 493-1997.

9. Allowance for Change and Expansion:
   a. Spare Capacity - System Wide – Defined by breakers in place at the completion of construction.

1) Load: 10 percent, minimum.
2) Rated Capacity: 10 percent, minimum.
3) Number of Additional Circuits: 10 percent, minimum.

b. Future Capacity - System Wide: 40 percent, minimum. – Defined as space in panels and boards, including bussing and fingers.
1) Load: 40 percent, minimum.
2) Rated Capacity: 40 percent, minimum.
3) Number of Additional Circuits: 40 percent, minimum.

c. See D99E – HPCDC for additional HPCDC requirements.

10. Manufacturers Field Testing and Start-Up: Manufacturer shall have NETA certified technician perform the following quality control testing, visual and mechanical inspections, electrical tests, and tests of the electrical gear.
Upon completing installation of the system, perform manufacturer's recommended testing, NETA testing, and the following preparations for tests:

a. Provide insulation resistance tests of connecting supply, feeder and control circuits.
b. Provide continuity tests of circuits.
c. Verify that all components meet specified requirements. Introduce accurately metered currents and/or voltages to relays and other devices which will enable accurate determination of the tripping or activation characteristics.
d. Perform mechanical operational tests in accordance with manufacturer's instruction manual. Manually exercise each operating mechanism, switches, circuit breakers, etc.
e. Check switchgear anchorage, area clearances, and alignment and fit of draw out components in compartments. Verify switchgear, switchgear supports and attachments are designed and installed for appropriate seismic zone.
f. Check tightness of bolted electrical connections with calibrated torque wrench. Refer to manufacturer's instructions for proper torque values.
g. Clean switchgear assembly using manufacturer's approved methods and materials.
h. Insulation resistance test of buses and portions of control wiring that disconnect from solid-state devices through normal disconnecting features. Insulation resistance less than 100 megohms is not acceptable. Tests shall be made phase to phase, phase to neutral, and phase to ground with switches in the open and closed positions.
i. Ratio and polarity tests on current and voltage transformers, not integral with overcurrent protective devices.
j. Ground resistance test on system and equipment ground connections.
k. Calibration of ammeters and voltmeters at midscale.
l. Verify appropriate capacity, overcurrent protection, and operating voltage of control power elements including control power transformer and control power wiring.
m. Calibrate watt-hour and demand meters to 0.5 percent, and verify meter multipliers.
n. Provide operational test of each automatic breaker, alarm and indication. Provide manual tests initially and proceed to full automatic testing that tests each manual and automatic function, sequence and scenario. Verify and document each sequence including interlock, relay, etc. operation.
o. Tests of Overcurrent Protective Devices: Testing of overcurrent protective devices shall be conducted according to procedures outlined in overcurrent protective devices specification section.
p. Provide complete individual and system testing of ground fault devices and system.
q. Infrared Scanning: After Substantial Completion and building has reached normal loading, but not more than 2 months after Final Acceptance, perform an infrared scan of switchgear assembly. Make bus joints and connections accessible to a portable scanner and perform scanning during period of normal working load as advised by NREL.

r. Follow-up Infrared Scanning: Perform one additional follow-up infrared scan at same locations as before 11 months after the date of Substantial Completion.

s. Record of Infrared Scanning: Prepare a certified report identifying all connections checked and describing results of scanning. Include notation of deficiencies detected, remedial action taken, and observations after remedial action.

Provide set of Record Documents. Include full updating on final system configuration and parameters where they supplement or differ from those indicated in original Contract Documents. Provide manufacturer's instructions for installation and testing of switchboards assembly to NREL. Visual inspection of all factory and field wiring for proper live bus clearance and secured for fault currents. Inspect, for defects and physical damage, testing laboratory labels and nameplate compliance with current single-line diagrams. Verify smooth and proper operation of all doors, hinges, handles, latches, etc.

END OF SECTION D5

SECTION D51
ELECTRICAL ENERGY GENERATION

PERFORMANCE

A. Basic Function:

1. Provide electrical energy generation for emergency and standby power systems. Note that the UPS systems proving back-up power to the HPCDC Data Center shall be separate from any other back-up capability.
   a. Provide backup power as required by code including the following:
      1) Emergency Lighting. See Section D6 for requirements.
      2) Elevators: See Section D11 for requirements.
      3) Smoke Control System.
      4) Electric Fire Pumps.
      5) Fire Detection and Alarm System.
      6) Central Control Station and Lighting.
      7) Public Address System.
      8) UPS system.
         a) 10% of the High Performance Computing Center.
         b) Computers in the Secure Data Center.
         c) Selected computers in the High Bay Laboratory.
         d) Selected computers in other laboratories.
         e) Telephone and communications systems.
      9) Computers in the Secure Data Center.
      10) Selected computers in the High Bay Laboratory.
      11) Selected computers in other laboratories.
      12) Telephone network closets, wireless access points, and communications systems.
      13) Laboratory Hoods and associated exhaust systems.
      14) All alarm and alerting systems.
      15) 10% of HPCDC load.
      16) Other systems and areas as required by code.
   b. Provide standby power as required by code including the following:
      1) Transfer time of 0.0167 seconds (1 cycle) for UPS.
      2) Duration: 4 hours of continuos operation for standby electrical generation.
   c. Provide uninterruptible power supply (UPS) system as follows:
      1) Duration of 15 minutes (10 minutes for HPCDC)

2. Electrical Energy Generation Capacity:
   a. Provide additional spare capacity at least 20 percent more than the connected load.

3. Where electrical energy generation elements must also function as elements defined within another element group, meet the requirements of both groups.

4. In addition to the requirements of this section, comply with all applicable requirements of Section 111 - Facility Performance, Section D - Services, and Section D5 - Electrical.

5. Requirements of this section shall also apply to the Backup Power requirements of the Research Test Bus (REDB) connection equipment.

B. Amenity and Comfort:

1. Sound and Noise:
   a. Provide generator exhaust silencer ratings of the industrial (12-18dB (A)) type.
   b. Provide generator enclosures of the sound attenuated type.
   c. Provide uninterruptible power supply systems noise generation of no more than 69 dBA measured at 5 feet (1.5 m).

d. Provide unit power conditioner audible noise generation of no more than 58 dBA measured at 5 feet (1.5 m).

2. Appearance: Provide emergency lights which appear to be normal space luminaires.
   a. Exception: Mechanical and electrical rooms may have self-contained emergency lights.

C. Health and Safety:

1. Protection from Breakage: Locate electrical energy generation equipment away from high traffic areas, building occupants, public, and vehicular traffic.

D. Fire Source: Locate electrical energy generation equipment away from storage areas and flammable materials.

1. Accidental Explosion: Ventilate electrical energy generation equipment to prevent the build-up of flammable gases.
   a. Electrical Shock: Protect personnel from exposure to live power leads.
   b. Intrusion: Protect electrical energy generation equipment from unauthorized access.
   c. Generators and Fuel Supplies: Located out-of-doors. Fuel supplies to be located above ground except natural gas fuel supply.

2. Generator and automatic transfer switch remote annunciator and control system: Located in fire command center or other centrally monitored location.

E. Seismic Design:

1. Provide an electrical energy generation elements with flexible joints where differential movement is anticipated.

2. Provide electrical energy generation equipment supports capable of supporting twice equipment's normal weight.

3. Provide concrete pad minimum 6" above grade for generator support.

F. Durability:

1. Expected Service Life Span: Provide UPS systems which will last a minimum of 20 years in service without major repairs or operating expense.

2. Moisture Resistance: Provide electrical energy generation equipment which is resistant to moisture.

3. Corrosion Resistance: Provide electrical energy generation equipment which is resistant to corrosion.

4. Impact Resistance: Provide electrical energy generation equipment with a protective housing.

5. Generator Set Start Up: Minimum time-delay adjustable 0-15 minutes, to prevent transfer in case of short-time outage.

G. Operation and Maintenance:

1. Emergency Lighting System Type: Centralized power source.

2. Uninterruptible Power Supply (UPS) Configuration: Parallel redundant with automatic transfer from UPS power to normal power. The UPS critical loads are not required to be split up between A and B feeds.
   a. Maintenance Bypass: Provide a maintenance switch to transfer UPS loads to the standby generators.
   b. UPS Capacity: Per measured load.
      1) Redundant Capacity: 25 percent.
   c. Substantiation:
      1) Design Development: Single-line drawings, power supply equipment sizes and types,

equipment room sizes.
2) Construction Documents: Riser diagrams, calculations, equipment operating parameters.

3. Uninterruptible Power Supply Systems:
   a. Current Distortion: Less than 10 percent total harmonic distortion with included filter.
   b. Overload Rating, Percent of Full Load For Any Combination of Linear and Non-Linear Loads:
      1) 100 percent continuously.
      2) 125 percent for 10 minutes.
      3) 150 percent for 30 seconds.
   c. Harmonic Content of Output Waveform:
      1) Maximum 4 percent RMS for nonlinear load.
      2) Maximum 2 percent RMS for any linear load.
      3) Maximum 5 percent RMS for nonlinear load.
   d. Functions:
      1) Internal maintenance bypass.
      2) Emergency power off.
      3) Input isolation transformer.
      4) Maintenance bypass cabinet
      5) Maintenance bypass transformer.
      6) SNMP communications capability.
      7) Remote monitor panel.
      8) Alarm status contacts.
   e. Reliability: 100 percent.
   f. Comply with applicable requirements of IEEE standards pertaining to semiconductor rectifier components, factory tests, and submission of test results.
   g. Comply with applicable requirements of NEMA Stds Pub/No.'s ICS 2, pertaining to AC automatic transfer switches and lead-acid batteries and PE 1, pertaining to uninterruptible power systems.

4. Power Conditioning: Modify incoming power characteristics to comply with utilization equipment requirements;
   a. Provide power conditioning for all equipment in computer rooms.
   b. Function:
      1) Static Voltage Regulation: For any load condition:
      2) Unbalanced Load Voltage Regulation: Within plus 5 and minus 2 percent, at nominal input voltage at 100 percent load imbalance.
      3) Overload Voltage Regulation: Output voltage of no less than minus 6 percent of nominal, at nominal input voltage for an increasing load from 100 percent to 200 percent of full load.
      4) Electrical Noise Suppression:
         a) Common Mode: 120 dB minimum.
         b) Normal Mode: 120 dB minimum.
      5) Single-Phasing Response: Upon loss of one input phase, output phase voltages shall remain within plus 5.8 to minus 4 percent of nominal from no load to 60 percent load.
      6) Harmonic Distortion: Less than 4 percent from no load to full load.
   c. Input Power Factor: 0.96 lagging or better, independent of the load power factor.
   d. Input Current Distortion: Less than 8 percent THD, independent of the output current distortion.
   e. Paralleling capable.

H. Control and Monitoring:

1. Standby Generator: Extent of generator set work is defined to include, but is not limited to, engine, electrical generator, engine starting system including batteries, instrument control panels, weather-protective housing, transfer switches, day tank(s), annunciator panel, exhaust silencer, wall thimble, and all accessories necessary for complete operation.

2. Manual or auto restart, emergency power off, main output circuit breaker.

a. Over temp and EPO monitor.
   1) Power monitor.
   2) Transient suppression.
   3) Input surge arrestor.
   4) Bypass switch.
   5) Bypass transformer.
b. Electrical Characteristics: 460 volts/3 phase/60 Hz.
c. Generator Fuel Supply: Natural Gas, Bio-Diesel, Diesel.
d. Generator Reliability: 100 percent.
e. Power Quality: Compatible voltage, wave shape, and frequency with the primary power source.
f. Run Time: 4 hours at 100 percent load.
g. Substantiation:
   1) Design Development: Single-line drawings, power supply equipment sizes and types, equipment room sizes.
   2) Construction Documents: Riser diagrams, calculations, equipment operating parameters.
h. Factory Testing: Submit a factory test log of engine-alternator set showing a minimum of four (4) hours testing at 100 percent rated load to NREL prior to shipment of the generator set. Load testing shall have a 0.8 power factor lagging continuously.
   1) Normal preliminary engine and generator tests shall be performed before unit assembly.
   2) All engine safety features shall be tested for operation and calibrated prior to the load test.
   3) All control and relay functions shall be tested for proper operation.
   4) A high potential test of the alternator shall be performed.
   5) All tests shall be conducted at 110°F. The actual radiators to be installed shall be used.
   6) The following engine run data shall be recorded at 15 minute intervals: Time, kW output, Output Voltage, Amperes, RPM, Input water temperature, Output water temperature, Input oil temperature, Fuel pressure, Oil pressure, ambient temperature, Radiator inlet air temperature if different than ambient.
   7) All test sheets shall be submitted at the completion of the test. The vendor shall contact NREL for scheduling and coordination of the factory test. NREL personnel or an NREL representative shall have the opportunity to witness the test.
i. Submit for Operation and Maintenance Manuals:
   1) Engine horsepower curves indicating manufacturer's approval of the engine rating for standby power application based on actual testing of a similar package. Special ratings or "maximum" ratings are not acceptable.
   2) Provide information on the content and capacity of exhaust gases emitted by the engine at 1/4, 1/2, 3/4, and full load. The exhaust gas omission shall comply with all Federal, State and Local Codes in force at the site location.
   3) Submit de-rating data, calculations, and final unit rating for the specified operating conditions at the site, where they differ from the vendor's stated standard operating conditions.
   4) Submit the generator harmonic analysis report for the 3rd, 5th and 7th harmonics.
   5) Provide engine-driven generator set's manufacturer certified test record of the final production testing prior to shipping the unit from the factory to the project site. Include the following tests: Single-step load pickup, Transient and steady-state governing, Safety shutdown device testing, Voltage regulation, Rated power, Maximum power.
j. The engine generator set supplier shall maintain a service shop located within two hours drive from the job site and shall have fully equipped service trucks with mechanic/technicians available and on-call 24 hours per day.
k. The engine alternator shall be capable of accepting a one-step application of 100% of nameplate kW load at 0.8 power factor and recover to steady state conditions without disruption of power to the load. When the alternator is sequentially loaded with rated full load in three equal steps, the transient voltage drop at any step shall be limited such that the alternator voltage is not less than 75% of nominal voltage, and frequency is not less than 91% of nominal. In addition, the voltage at

the alternator shall recover to within 90% of nominal voltage and the frequency to within 97% of nominal within 4 seconds after each sequential load application, or 60% of each step time interval (whichever is less).

l. Substantiation:
   1) Design Development: Single-line drawings, power supply equipment sizes and types, equipment room sizes.
   2) Construction Documents: Riser diagrams, calculations, equipment operating parameters.

3. Spare Capacity:
   a. Generator Systems: 20 percent over total load at altitude.
   b. Battery Systems: 20 percent over total load at altitude.
   c. Power Conditioners: 20 percent over total load at altitude.

4. Relocated Generators: Relocate two existing test generators from the wind farm site. Provide transportation to new site, testing at site per Section 2, and all connections necessary for a complete operation. These generators are to be connected to the test bus (REDB). The relocated generators are separate from the building backup power generator and shall not be normally used for building backup power.

5. Photo Voltaic Systems: At least a 100 kW array. Install per NEC 690. Capable of disconnecting from utility interactive service and connecting to either AC or DC REDB

END OF SECTION D51

SECTION D52
SERVICE AND DISTRIBUTION

PERFORMANCE

A. Basic Function:

1. Provide distributed electric power for equipment circuits, lighting circuits, receptacle circuits, and electrical utilization devices, and power as required by labs.

2. Main Electrical Service: Provide service transformers and switches as necessary to convert its distribution voltage to the building's utilization voltage. Coordinate all utility connections and power requirements with utility company.

   a. The switch(s) shall be a Vista switch capable of serving the ESIF transformers plus future transformer(s) for the data center build-out. The subcontractor shall continue (2) 5" conduits in a concrete duct bank from the manhole (to be provided in the infrastructure site project) at the corner of East Loop Road and North Loop road (see section 9.3) to the new switch location (to be selected by the subcontractor). They shall also stub (2) 5" conduit in a concrete duct bank from the new Vista switch location to a location 5-feet beyond the switch to feed through for a future connection to other facilities.

3. Building and Lab services will be segregated by critical and non-critical loads, in separate panel boards and with main breakers with controllable settings. Separate services are to be provided for:
   a. Building power.
   b. High Performance Computing Data Center.
   c. Laboratory group
   d. REDB

4. Distribution Circuit Configuration: Radial circuit arrangement.

5. Switchgear Location: Locate adjacent to electrical service entrance.

6. Panel board Locations: Located as shown on the drawings. Do not locate panel boards in public corridors, hallways, or stairwells.
   a. Provide separate panel boards for lighting, receptacles, and mechanical equipment, and other loads.

7. Where service and distribution elements must also function as elements defined within another elements group, meet requirements of both groups.

8. See REDB requirements section for information on the research test bus.

9. In addition to the requirements of this section, comply with all applicable requirements of Section 111 - Facility Performance, Section D - Services, and Section D5 - Electrical.

10. Provide minimum 100 kVA photovoltaic grid on roof. Provide connection to the REDB and automatic connect to building power when test bus is not in use. The PV Array will connect to both the DC and AC REDB. The DC strings shall be reconfigurable to provide a variety of voltage levels.

11. Provide TVSS using selenium technology for service entrance gear.

B. Amenity and Comfort:

1. Sound and Noise:
   a. Do not locate transformers near sound sensitive areas. See Section C for interior space sound level requirements. Locate in mechanical or electrical rooms, not service corridors.
   b. Provide transformers with noise generation 3 dBA less than the sound levels listed in IEEE Standard 241-1990 (R1997).

2. Appearance:

a. Location of Service Transformer: Outside the building.
b. Do not locate switchboards, transformers, and panelboards in corridors, lobbies, or stairwells.
c. Conceal electrical conduit in walls and behind ceilings in the occupied spaces. See Section D for additional requirements.

3. Protection from Breakage: Locate service and distribution equipment in closets and electrical rooms.

4. Intrusion: Protect electrical distribution equipment from unauthorized access and vandalism.

C. Structural:

1. Seismic Design: Provide service and distribution elements with the ability to move where differential movement is anticipated.

2. Impact Resistance: Provide service and distribution equipment with industrial grade enclosures.

D. Durability:

1. Service Transformers: Insulation Class 105 deg C.
   a. General-Purpose Transformers: Insulation Class 105 deg C.

E. Operation and Maintenance:

1. Capacity:

   a. Service Transformers: In accordance with code plus 10 percent spare capacity or as otherwise indicated elsewhere in this document.
      1) Kilovoltampere (kVA) Rating: Provide transformers with preferred ratings according to IEEE C57.12.00-2006.
      1) Primary Voltage: As required.
      2) Secondary Voltage: As required to serve building switchgear and electrical loads. See Section D5 for system voltages.
   b. Main Switchboards: In accordance with code plus 10 percent spare capacity.
   c. Interior Distribution Transformers: As required to serve building circuits and equipment plus 10 percent spare capacity.
   d. Branch Circuit Panelboards: In accordance with code plus 20 percent spare capacity.
   e. Substantiation:
      1) Design Development: Single-line diagram, showing feeder and equipment sizes; required electrical room sizes.
      2) Construction Documents: Riser diagram and calculations.
      3) Construction: Equipment characteristics.
      4) Closeout: For each panelboard, balance current on each phase conductor within 15 percent.

1. Ease of Use: Provide main busway centrally located to minimize branch wiring runs.

2. Transformer Applications:
   a. Distribution Transformers for Ordinary Loads: Use transformers as requested.
   B. Distribution Transformers for Loads Sensitive to Noise and Harmonics: Shielded isolation transformers serving High Performance Computing Data Center (HPCDC), and the Metrology Laboratory.

3. Ease of Maintenance and Repair:
   a. Provide equipment which is segmented into modules to ease replacement of component failures.
   b. Wherever equipment is located in cabinets or enclosures, the construction will provide doors or removable panels sized to allow easy removal and replacement.

4. Adaptability:
   a. Provide space for the addition of 30% transformers and panelboards in the future. Space shall be fully bussed with all accessories for future breaker installation.

END OF SECTION D52

SECTION D53
BRANCH CIRCUITS

PERFORMANCE

A. Basic Function:

1. Power: Provide adequate electrical power and safe and efficient distribution from panelboards to lighting, wiring devices, equipment, and appliances, based on the project program, other requirements in Volumes A through G, and as follows:

2. Branch circuits comprise the following elements:
   a. Branch circuit breakers.
   b. Conductors and cable from panelboards to fixtures, wiring devices, and mechanical equipment.
   c. Raceways and boxes.
   d. Wiring devices, including, but not limited to, receptacles, floor boxes and plates, wall switches, wall dimmers, remote control switching devices, and wall plates.

3. Where branch circuits are integral with elements defined within another element group, the construction will meet requirements of both element groups.

4. In addition to the requirements of this section, the construction will comply with all applicable requirements of Section 111 - Facility Performance, Section D - Services, and Section D5 - Electrical Power.

B. Amenity and Comfort:

1. Accessibility: Comply with ADA Accessibility Guidelines and the following:
   a. Extent: Provide ADA accessible receptacles in all spaces.
   b. Location: Where ADA accessible receptacles are required, mount devices no higher than 48 inches (1220 mm) and not less than 15 inches (380 mm) above the finished floor.

2. Convenience:
   a. Provide convenience receptacles at intervals no greater than 10 feet (3 m) along the base of all wall areas.
      1) Provide minimum of 12 circuits - half from a UPS source- to each communications room, or as required in D71.
      2) Coordinate with user and provide floor receptacles in conjunction with equipment and furniture layouts.

3. Substantiation:
   a. Design Development: Provide receptacle layouts.

4. Prior to energization, test wires and cables for electrical continuity and for short-circuits.

C. Health and Safety:

1. Tested Materials:
   a. Provide branch circuit elements in compliance with code and that are UL listed or labeled.

D. Operations and Maintenance:

1. Capacity: Provide branch circuit wiring with sufficient capacity to accommodate future growth and renovation without major rewiring.
   a. All Circuits: Limit design loads to 50 percent of capacity permitted by code.

PRODUCTS

A. Branch Circuit Wiring:

1. Do not use the following:

a. Type NM cable.
b. Type AC cable except for horizontal runs within stud walls, to luminaires (6' max length), to under cabinet lighting, to required equipment, and to motor connections (use liquid-tight). Do not use in hazardous locations or for emergency systems.
c. Stabiloy aluminum or other aluminum or aluminum products.
d. Aluminum conduit.
e. Surface raceway in offices, conference rooms or other finished areas.

END OF SECTION D53

SECTION D59
OTHER ELECTRICAL POWER ELEMENTS - TEST BUS (REDB)

PERFORMANCE

A. Basic Function:

1. Basic Function: The ESIF Research Electrical Distribution Bus (REDB) is a specialized electrical distribution bus network which interconnects laboratories and experiments to test equipment. It is intended for research, development and testing to characterize the performance of integrated power systems and components using a variety of renewable energy and fossil fuel powered electric generators, coupled with appropriate loads and storage systems. Examples of renewable energy generators that will be used include PV arrays and simulated wind turbines. Fossil-fueled generators include internal combustion engines and natural gas micro turbines. The REDB also integrates power electronic based grid simulators, electrical load banks, Smart Grid technology evaluation capabilities, and power electronic inverters and converters. The REDB allows safe connection and disconnection of these resources to the REDB, and provides protection, monitoring and data acquisition capabilities. This description does not include house power electrical connections.

2. The REDB shall be a bus duct system with features to be used for the following:
   a. Testing and characteristics of industrial distributed power systems and components.
   b. Research and testing of innovative power systems, distributed generation components, control systems, and Smart Grid technologies.
   c. Development and validation of standards to support these industries
   d. Evaluation of common SCADA components used in the electrical utility industry
   e. Educational outreach and support to the U.S. wind and distributed energy resource industries
   f. Power:
      1) The REDB Main Service distribution gear shall be fed from a separate utility transformer.
         a) Provide main disconnect switch at the Main Service gear.
         b) Each REDB shall be capable of connection/disconnection to the Xcel Energy power grid.
         c) Review the NREL ESIF Primary Distribution and REDB diagram for additional information
            (1) Ratings: The REDB shall have the following ratings:
               (a) AC bus - 480Y/277V 3-phase, 4-wire Y-connected with 600 VAC nominal rating with fully rated ground and 100% neutral.
               (b) 2500 amps
               (c) 1600 amps
               (d) 200 amps
               (e) 200 amps
               (f) DC bus - capable of a voltage +/- 1000 volts and nominally run at 12v, 24v, or 48v.
               (g) 2500 amps
               (h) 2500 amps
               (i) 200 amps
               (j) 200 amps
            (2) Metering: Provide revenue grade metering at each load or disconnect. Metering shall include the neutral bus and ground bus.
            (3) Disconnects: Disconnects shall be circuit breaker type.
               (a) Provide disconnect at connection to utility.
               (b) Provide disconnect switches between labs for each bus.
               (c) Provide disconnect for each REDB disconnect to each lab.
               (d) The Lab disconnect shall contain normally open and normally closed contacts to shunt trip the breaker via locally mounted Emergency Power Off (EPO) buttons. Provide permanent labeling on EPOs as to function.

(e) Provide disconnect for equipment connection to bus.

(4) SCADA (Supervisory Control and Data Acquisition.

(5) Provide SCADA system that includes a graphical display showing the layout and status of the REDB system with each of the following:

(a) Shall monitor and control the position of each breaker at the master station. The position of the breaker shall be easily recognized from the SCADA system control and remote system.

(b) Shall monitor and record the metering of each breaker at master station. Metering shall indicate the flow of power to or from experiment.

(c) Shall have sufficient capacity to record 1 second data (voltage, current, frequency, real power, reactive power) for 48 hours and store this into a computer system database.

(d) The system shall also have the capability to record events based on triggers at 128 samples per cycle for five seconds and store this information into a computer system database.

(e) This captured data shall be accurately time-stamped and saved to a permanent storage system.

(f) Shall allow remote access from other computers (on and off campus) via secure connection.

(g) Shall be backed up by the facility UPS system.

(h) Each breaker shall be easily reconfigurable - disconnecting or reconnecting to the system shall automatically reconfigure the SCADA system.

(i) A utility grade metering system shall provide revenue grade metering at certain device connection points. This metering needs to have the ability to send information back to a central location in the control room. It must be able to accurately measure fully unbalanced 3 phase devices including the neutral and ground connected in either 4 wire wye or delta.

(j) Any power measuring equipment will comply with IEC 61000-4-30 class A devices.

(k) Shall monitor for availability of power as well as loads and power quality.

(6) The neutral of the AC REDB's shall be switched. Both the positive and negative on the DC bus shall be switched.

B. Amenity and Comfort:

1. Accessibility: Comply with ADA Accessibility Guidelines and the following:

a. Where located along the ceiling,

b. Convenience: Bus shall be accessible at each lab.

c. Labeling: Provide per the following.

1) Provide labeling at each bus on 10' centers. The label shall be an NREL approved logo.

d. There shall be a sufficient number of AC and DC Research Bus components to support concurrent, individual experiments and testing. The architecture, ratings and configuration of the bus work shall be designed to accommodate multiple, simultaneous experiments. It shall be flexible enough to configure many different types of experiments using multiple AC and DC buses. It shall provide the capability to isolate sections of the buses within satellite labs for local lab testing with no connection to the building-wide research buses. To better communicate the required functions of the REDB, conceptual drawings in Section 5.2.10 show the conceptual one-line drawings of the AC and DC research buses. The 13.2 kV Micro Grid electrical distribution system (located in the Outdoor Test Area), the typical internal laboratory electrical bus and device connections, and typical connections to the 13.2 kV Microgrid test area are also shown.

e. Each individual bus shall be a stand-alone system capable of connecting to multiple devices in the specified labs within the ESIF. A device is any lab resource that supplies power, sinks power, or both. Power supplies, load banks, an Xcel utility grid connection, energy storage units and power

converters are examples of devices. Devices may connect to the buses in different ways, depending on whether the device is a permanent lab resource or if it is a temporary experiment. Devices must be capable of being connected or disconnected from any bus using a matrix of SCADA-controlled contactors. Devices must be coupled with remote, addressable connection stations. Connection, protection and monitoring of each device must be controlled via the master supervisory, control and data acquisition system (SCADA).

f. The bus design shall allow for future expansion and/or reconfiguration without major laboratory disruption, for instance, the addition of a parallel bus to the existing system or the addition of additional devices or test stations.

C. Health and Safety: Tested Materials:

1. Tested Materials:
   a. The construction will provide all materials that are UL Listed.

D. Health and Safety:

1. Tested Materials:
   a. The construction will provide all materials that are UL Listed.
   b. All buses, wiring and devices shall comply with NREL safety standards. This includes the capability to lock-out and tag-out all potential energy sources connected to the system when doing service, wiring, or connecting experiments to the system
2. EPO devices will be provided at experiment stations to disconnect devices from power.

E. Structure:

1. Seismic Design: Provide service and distribution elements with the ability to move when differential movement is anticipated.

F. Durability:

1. Provide heavy duty disconnect switches.

G. Operation and Maintenance:

1. Provide provisions for bi-annual calibration of all SCADA sensors, probes, CTs, PTs, data acquisition, and data logging. Provide provisions for verification of proper operation of all contactors and relays in the system.

H. Capacity:

1. Service transformer serving the research bus shall be 1500 kW.

Note: The four 13.2kV to 480v transformers for the Micro Grid Test Area can be on the same feed as the 1500 kVA 13.2kV to 480V transformer for the REDB.

a. Main Switchboard - 2500 Amps
b. REDB - per drawings in Section 5.2.10.
c. Interior Distribution Transformer - Per 2008 NEC
d. Disconnect Switches: Per 2008 NEC
e. Metering: provide metering capable of 128 samples per cycle.
f. Substantiation:
   1) Design development: Single line diagram showing conceptual design including feeder and equipment sizes, one-line diagram and required electrical room sizes.
   2) Construction Documents: Riser diagrams, layout, and calculations.
   3) Construction: Equipment Characteristics
   4) Closeout: Testing of SCADA System, grounding, metering, and components.
g. Adaptability:
   1) Disconnect Switches: disconnect switches shall be capable of remote operation via the

SCADA system.

2) SCADA System shall automatically update when equipment is added or removed.

h. Connections to power:

1) The following are examples of the many NREL-provided equipment that shall be connected to the REDB. For a complete list, see the laboratory equipment lists. This equipment shall be connected and commissioned by the design builder. NREL-provided equipment shall be permanently connected with disconnects at each bus.

a) 120kW test diesel generator - AC
b) 80 kW test diesel generator - AC
c) 100 KW Load bank - resistive/inductive AC
d) 165kW/404kVAR Load bank - resistive/reactive/capacitive - AC
e) 30kW Microturbine - AC
f) 100 kW PV array - DC connection
g) 100kw PV Array – AC Connection
h) 1 MW Utility Grid Simulator – AC
i) Bi directional DC power supplies
j) Each device shall be capable of connection to each of the REDBs.

I. Laboratories Connections: Extend the REDB to each ESIF laboratory requiring access to the REDB. The major labs envisioned are listed here:

1. High Bay Lab - Main Lab
2. Power Electronics Lab
3. Smart Grid Component slab.
4. Outdoor Test Area
5. Roof Test Area
6. Hydrogen Systems Lab
7. Energy Storage Lab
8. Industry User Lab
9. High Bay Control Room
10. VSHOT
11. High Voltage/High Current Lab.
12. Commercial High Bay lab.
13. PEC lab
14. Fuel Cell lab

END OF SECTION D59

SECTION D6
ARTIFICIAL LIGHTING

PERFORMANCE

A. Basic Function:

1. Provide artificial means of lighting interior and exterior spaces.
2. Portable lamps (not permanently attached to the building or other building furnishings) will not be used to accomplish required artificial lighting.
3. Where artificial lighting elements also must function as elements defined within another element group, meet the requirements of both element groups.
4. In addition to the requirements of this section, the construction will comply with all applicable requirements of Section 111 - Facility Performance and Section D - Services.

B. Amenity and Comfort:

1. Light Levels: Provide maintained ambient illuminance values for various activities that are within the ranges specified in the IESNA Lighting Handbook-2000, except for the following:
   a. As indicated in the D-99 Sections.
2. The lighting control system shall be Delta, and connected to the Delta Building Automation system or shall be stand-alone. The lighting control system shall, as a minimum, meet all of the requirements of the 2006 International Energy Conservation Code.
3. Light Quality: Provide luminous environment in each space that is designed to complement the functions and the character of the space.
   a. Distribution: In keeping with geometry of space and location of visual tasks.
   b. Visual Comfort: Provide lighting systems with the following characteristics:
      1) VCP: Visual Comfort Probability (VCP) of not less than 70.
      2) Luminance Ratio: Maximum luminance of luminaire does not exceed average luminance by ratio of more than 5:1 at 45, 55, 65, 75, and 85 degrees from nadir for crosswise and lengthwise viewing.
      3) Maximum luminances of luminaires crosswise and lengthwise do not exceed the following values:
         a) 45 degrees above nadir: 7710 cd/sq m.
         b) 55 degrees above nadir: 5500 cd/sq m.
         c) 65 degrees above nadir: 3860 cd/sq m.
         d) 75 degrees above nadir: 2570 cd/sq m.
         e) 85 degrees above nadir: 1695 cd/sq m.
   c. Color of Light: Appropriate for functions accommodated in space and characteristics of interior finishes.
   d. Character of Fixtures: Coordinated with architecture and other building systems and appropriate to finish level.
   e. Where special methods are to be used to relamp fixtures, such as the use of lifts, they shall be called out in the drawings and a source for the lift or other equipment provided.
   f. Coordinate lighting with security camera requirements.

C. Health and Safety:

1. Electrical Hazards: The construction will be in compliance with all NFPA standards that apply to the occupancy, application, and design.
   a. Comply with NFPA 70-2002 requirements for hazardous locations applications.
2. Emergency Systems: Provide backup lighting for periods of normal power interruption, for the

following:
a. Systems and areas as required by code.
b. High Performance Computer Data Center and associated staging area, hazardous locations labs, teledata rooms, electrical rooms, generator areas, and elevator machine rooms. See D99 sections for additional areas.

D. Durability:

1. Moisture Resistance: Regardless of whether exposure to moisture is likely or not, provide lighting equipment to be resistant to moisture.

E. Operation and Maintenance:

1. Capacity: Provide lighting to deliver required illumination while operating within intended ratings.

2. Power Consumption and Efficiency:
a. Comply with requirements for energy efficiency of lighting in ASHRAE 90.1-latest edition.

3. Allowance for Change and Expansion:
a. Spare Capacity: 20 percent, minimum.
b. Future Capacity: 40 percent, minimum.

PRODUCTS

A. All lamps shall be of low mercury and low-lead construction, such as Phillips alto or equivalent. Provide 10% spare lamps and ballasts at the completion of the project.

B. Minimize the use of CFL's and HID's to the extent practical.

C. The construction will not use:

1. Reflector halogen or tungsten halogen.

END OF SECTION D6

SECTION D61
INTERIOR LIGHTING

PERFORMANCE

A. Basic Function:

1. Provide artificial lighting for all interior spaces that is adequate in quality and distribution for the performance of tasks typical for the type of space and the characteristics of the intended population, regardless of the availability of natural light.

2. Interior lighting comprises the following elements:
   a. Luminaires for general illumination.
   b. Accent lighting.
   c. Emergency lighting.
   d. Illuminated exit signs.
   e. Task lighting.

3. Where artificial lighting is integral with elements defined within another element group, the construction will meet requirements of both element groups.

4. In addition to the requirements of this section, the construction will comply with all applicable requirements of Section 111 - Facility Performance, Section D - Services, and Section D6 - Artificial Lighting.

B. Amenity and Comfort:

1. Accessibility: Comply with ADA Accessibility Guidelines and the following:
   a. Extent: Provide accessible lighting controls for all spaces, regardless of location.
   b. Location: Where accessible lighting controls are required, the construction will provide devices that are mounted so they can be reached from a wheelchair and are not more than 54 inches (1370 mm) and not less than 15 inches (380 mm) from the floor.
   c. Operating Force: Where accessible lighting controls are required, the construction will provide controls that can be operated without tight grasping or pinching and by a force of not more than 5 lbf (22.2 N).

2. Light Levels: In compliance with Section D6, IESNA-2000, and section D99.

3. Light Quality:
   a. Spatial Luminance: Provide luminous environments throughout project in which brightness ratios are maintained within the following ranges:
      1) Task Area and Adjacent Darker Surroundings: 3:1.
      2) Task Area and Adjacent Lighter Surroundings: 1:3.
      3) Task Area and More Remote Darker Surfaces: 10:1.
      4) Task Area and More Remote Lighter Surfaces: 1:10.
      5) Light Sources and Adjacent Surfaces: 10:1.
      6) Any Surfaces Within Normal Field of View: 30:1.
   b. Color: Provide light sources throughout project with Color Rendering Index of not less than 80.
   c. Substantiation:
      1) Construction Documents: Calculations for representative spaces, prepared by a registered electrical engineer, and product data for lamps and luminaires.
      2) Construction: Measurements of quality of light for representative spaces throughout the project.

C. Health and Safety:

1. Emergency Lighting: Provide emergency lighting that complies with code and the following:
   a. In addition to exit signs and means of egress lighting, the construction will provide emergency

illumination of not less than 1 fc (10 lux) for a minimum of 1 hour in spaces as follows:
1) Computer room.
2) Lobby.
3) Control room.
4) Backup power generator room.
5) Telephone room.
6) Elevator equipment rooms and elevator cab lighting.

b. Egress illumination shall automatically be turned on when power fails. Otherwise, it will be controlled by a lighting control panel.

2. Fire-Resistant Construction: Provide lighting elements throughout the project that are made of incombustible materials in compliance with code and that are UL listed or labeled, with flame spread and smoke developed ratings printed on product.

D. Operation and Maintenance:

1. Power Consumption and Efficiency: Comply with requirements of Section D6 - Artificial Lighting and the following:
   a. Lighting Controls: Provide level of control of lighting appropriate to type of space and NREL's requirements for energy conservation.
   b. Daylighting Controls: Provide separate lighting circuits for spaces or zones adjacent to fenestration.
      1) Controls: Daylight sensing controls, multiple-step dimming to daylighting OFF throughout project.
      2) All conference rooms shall have separate controls for ambient lighting, task lighting, dimmable lighting for presentations, and capable of turning off lighting near the project screen.
   c. Occupancy Controls: Provide lighting controls for private offices that do not require action by occupants.
      1) Controls: Occupancy sensor and programmable timing control throughout project.
      2) Occupancy sensors shall include manual on/off control of lighting with photocell override such that the occupant can select 'on' or 'off' but the system will override the 'on' setting and turn lights off if the system detects no occupants.
   d. Light Sources: Provide lamps with average lamp efficacy rating not less than the following:
      1) Compact Fluorescent Lamps: 55 lumens/watt.
      2) Full Size Fluorescent Lamps: 90 lumens/watt.
      3) Metal Halide Lamps: 95 lumens/watt.
   e. Ballasts: Provide electronic or energy efficient ballasts with fluorescent lamps. Ballasts used in daylight areas shall be dimming or step dimming type.
   f. Provide daylight to all spaces having windows providing 100% of light in spaces between the hours of 10:00 am and 2:00 pm.

2. Ease of Maintenance: Provide luminaires that do not collect dirt rapidly and are readily cleanable.
   a. Luminaire Categories: Provide luminaires of IESNA Category I, II, or V, for minimum dirt accumulation and LDD factors.

END OF SECTION D61

SECTION D62
EXTERIOR AREA LIGHTING

PERFORMANCE

A. Basic Function:

1. Provide artificial lighting for exterior spaces, as required by the project program that is adequate in quantity, quality, and distribution for the performance of tasks typical for the type of outdoor space and the characteristics of the intended user population.

2. Exterior area lighting comprises the following elements: Exterior luminaires, poles, standards, or other means of mounting the luminaires, power supply, and controls.

3. Where exterior area lighting is integral with elements defined within another element group, meet requirements of both element groups.

4. In addition to the requirements of this section, the construction will comply with all applicable requirements of Section 111 - Facility Performance, Section D - Services, and Section D6 - Artificial Lighting.

B. Amenity and Comfort:

1. Light Levels: Provide maintained average illuminance values for exterior spaces that are based on the primary visual tasks to be accommodated and are not less than the following, when measured at grade:
   a. Parking Lots, High Activity: 1.5 fc (15 lux), maximum uniformity ratio (average to minimum) of 4:1.
      1) Coordinate light levels with security camera requirements. Provide lighting levels that meet the more stringent of the two requirements.
   b. Pedestrian Areas:
      1) Sidewalks in Commercial Areas: 1.5 fc (15 lux), maximum uniformity ratio (average to minimum) of 4:1.
   d. Zoning Requirments: Shielded lamps over 2,800 lumens, maximum illumination level at property boundry of 0.3 foot candles. If this conflicts with security requirements other lighting approaches will be considered on an exception basis.
   c. Substantiation:
      1) Design Development: Overall exterior lighting scheme, including types of luminaires and lamps.
      2) Construction Documents: Calculations of illuminance levels and uniformity ratios for representative exterior areas, prepared by a registered electrical engineer.
      3) Construction: Measurements of illuminance levels and uniformity ratios for representative exterior areas, with a report setting forth results after correcting for maintenance factors keyed to luminaire design and lamp types.

2. Light Quality:
   a. Glare Minimization: Provide exterior area lighting that minimizes the incidence of discomfort glare and avoids disability glare under all normal conditions of use, in accordance with IESNA recommendations.
   b. Color: Provide light sources throughout project that render automobile colors with reasonable accuracy
   c. Substantiation:
      1) Construction: Measurement of actual installation in accordance with procedures referenced in ANSI/IESNA RP-8-2000(R05).

3. Appearance of Lighting Installation:
   a. Provide exterior area lighting that is compatible with overall project appearance and coordinated with site layout and building organization.

1) Luminaire Mounting:
   a) Installation on poles, wall mounting brackets, architectural fixtures, or suspended cables:
   b) Maximum height of 12 ft (3.5 m) for pedestrian lighting and 20 feet for parking lot lighting.
   c) Style compatible with building design.
   d) Material and finish compatible with exterior building elements.
2) Luminaire Design:
   a) Light distribution by direct or indirect methods.
   b) Optical control by reflectors or refractors.
   c) Material and finish of housing compatible with mounting.

4. Lighting Cutoff:
   a. Configure exterior area lighting to avoid spill light on adjacent property and streets.
   b. Configure exterior area lighting to minimize illumination of building facade and building windows, in particular.

C. Structure:

1. Provide poles for parking lot area lighting that are located to avoid damage by automobiles, mounted to bases that are structurally capable of withstanding moderate impact, or protected by bollards or similar structures.

2. Provide mounting system for exterior area lighting that is capable of withstanding 3-second wind gusts in excess of 120 mph (54 m/s) and maintained wind speed of 100 mph.

3. Substantiation:
   a. Construction Documents: Manufacturer's standard strength data, as published in product literature.

D. Durability:

1. Expected Service Life Span: Provide a system which will last a minimum of 25 years in service without major repairs.

2. Vandal Resistance:
   a. Parts not easily removed without the use of special tools.
   b. Luminaires mounted at minimum height of 12 ft (3.5 m) above grade.
   c. Lenses of tempered glass.

3. Substantiation:
   a. Preliminary Design: Identification of proven-in-use assemblies of the same type, for inspection by NREL.
   b. Design Development: Identification of actual products to be used.

E. Operation and Maintenance:
1. Minimum Outdoor Operating Temperature: Provide lighting systems that operate at temperatures as low as -20 degrees F (-30 degrees C).
2. Power Consumption and Efficiency: The construction will comply with requirements of Section D6 - Artificial Lighting.
   a. Lighting Controls: Level of control of lighting appropriate to exterior area and NREL 's requirements for energy conservation.
3. Maintenance Efficiency: Provide luminaires that do not collect dirt rapidly and are readily cleanable.
4. Luminaire Categories: Provide luminaires of IESNA Category I, for minimum dirt accumulation and LDD factors.
5. Ease of Relamping: Provide luminaires designed for easy relamping with special tools.

PRODUCTS

A. Do not use:
   1. Incandescent lighting.

END OF SECTION D62

SECTION D7
TELECOMMUNICATIONS

PERFORMANCE

A. Basic Function:

1. Provide the following telecommunications services:
   a. Voice and Data (D71): Infrastructure for voice and data transmission and telephone equipment.
   b. Sound Reinforcement (D72): Public address system.

2. Where telecommunications elements also must function as elements defined within another element group, meet the requirements of both element groups.

3. Emergency telephones (dials internal emergency number automatically) and outside phone lines as a backup to Voice Over Internet Protocol (VOIP) phone system are required.

4. Emergency Telephones and signage must be placed every 100 ft. throughout areas determined by Security requiring emergency reporting capabilities in areas of higher hazards.
   a. In all new construction, an outside phone line service must be available at centralized locations determined by security.
   b. Emergency Telephones in elevators must have the ability to be used immediately once a call has ended (immediate disconnect) there can be no delay before the next call made.

5. Digital Signage/Video Displays
   a. Provide LCD monitors in lobby.

6. In addition to the requirements of this section, comply with all applicable requirements of Section 111 - Facility Performance and Section D - Services.

B. Amenity and Comfort:

1. Accessibility: Systems shall comply with requirements of local authorities for facilities for the disabled.

C. Health and Safety:

1. Electrical hazards: the construction will be in compliance with all nfpa standards that apply to the occupancy, application, and design.

   a. Provide controlled access to spaces housing electrical components and allow access only by qualified personnel.

   b. Comply with NFPA 70 (most recent adopted) requirements for hazardous locations applications.

2. Emergency Systems: Provide backup power when normal power is interrupted, for the following:
   a. Systems and areas as required by code.
   b. Systems as noted in Sections D71, D72, and D73.

B. Durability:

1. Enclosures: As required to protect equipment from environment in which it is installed, complying with NEMA 250 (most recent adopted) and:
   a. Areas to be Hosed-Down, or Equivalent, Exterior or Interior: Type 4.
   b. Exterior, Exposed to Weather and Wind: Type 3S.
   c. Interior, Other Locations: Type 1.

C. Operation and Maintenance:

1. Capacity: Provide systems to deliver required performance while operating within their intended ratings.
   a. Substantiation:

1) Construction: Testing of wiring systems for continuity, prior to functional performance testing; functional performance testing as per latest TIA/EIA/BICSI standards (refer to Section D71).

2. Power Consumption and Efficiency:
   a. Comply with requirements for energy efficiency of electrical equipment in ASHRAE 90.1-2007.

3. Ease of Use:
   a. Zoning: Arrange wiring and protective devices so that outages caused by local faults do not affect unrelated areas or systems.
   b. Main Telecommunications Panel: Provide one main telecommunications room.
   c. Telecommunications Room:
      1) Provide as necessary to provide 100% building coverage with no cable run exceeding 225 feet. Each level shall have a minimum of one telecommunications room.

4. Allowance for Change and Expansion:
   a. Spare Distribution Capacity: 20 percent, minimum.
   b. Future Distribution Capacity: 40 percent, minimum.

END OF SECTION D7

SECTION D71
VOICE AND DATA STRUCTURED CABLING

PERFORMANCE

A. Basic Function:

1. Provide voice and data structured cabling system as follows:
   a. The entire building or buildings will support data, voice and video service in all areas.
   b. NREL Infrastructure Standards, EIA/TIA, and BICSI standards shall be adhered to.
   c. Eight 4" conduits shall be provided into the Building Entrance Facility (BEF). The BEF shall be its own room with no other elements in the space. One 200 pair copper cable and two 96 strand single mode fiber optic cable shall feed the building.
   d. One Telecommunications Room (TR) shall be designated the main TR. All other TRs and the BEF shall connect to this main TR with 100 pair copper and one 48/48 hybrid single mode/multi mode fiber optic cable utilizing a star topology.
   e. Multiple TRs are anticipated to adequately service the building. Cable length to outlets cannot exceed 90 meters.
   f. Typical outlet configuration shall be 4 ports of Category 6A (10Gig) white cables. Cubicles shall have one typical outlet. Offices shall have a typical outlet on two walls. Conference rooms shall have typical outlets on four walls. All other areas as specified in Section D99.
   g. Work area telecommunications outlets consists of a standard 4-11/16 inch deep square back box with a single gang mud ring, one 1 inch conduit stubbed up to accessible ceiling, and face plate with four positions.
   h. Data outlets shall be provided to support other systems in the building (access control, video surveillance, video conferencing, BAS, etc.).
   i. Outlets for wireless access points shall be located to provide 100% building coverage.
   j. Each TR shall have three two-post equipment racks. Room shall facilitate working clearances - three feet in front and on the side of equipment racks, and five feet in back of racks.
   k. All TRs will have a minimum size of 120 square feet.
   l. Each TR shall be connected to the main TR with cable tray and/ or vertical 4 inch conduits.
   m. Dual quad outlet boxes shall be installed on each of the walls of the TR. Each quad outlet box shall have installed four 120 volt 20 amp circuits.
   n. Card reader access control shall be provided on all TRs and BEF doors.
   o. All TRs shall have UPS and generator power.
   p. All TRs shall maintain a constant temperature of 70 degrees. Cooling system shall be on generator power.
   q. All TRs shall have a minimum of one grounding bar.
   r. All TR UPS units shall be connected to the NetBotz APC Infrastructure Manager.
   s. Provide ¾" AC grade fireproof plywood from floor level to 8'-0" AFF on interior walls of TRs. Paint white, leaving one fire rating stamp visible per piece of plywood.
   t. All TR floors shall be concrete or static free VCT.
   u. Finished ceiling is not required
   v. Allow for 20% growth in sizing patch panels.
   w. Provide service loop in TRs for all cable.
   x. Cable tray shall be a minimum of 12 inches wide and four inches deep. Wire basket cable tray is acceptable.
   y. All cable trays, ladder rack, and equipment racks shall be grounded. Any conduit attached to cable trays shall be grounded.
   z. Ladder rack shall be a minimum of 12 inches wide.
   aa. Pathways shall not exceed 60% capacity on day one.
   ab. Provide lightning protectors and wires used to ground the equipment.
   ac. Multi-mode fiber optic cable shall be Corning OM3 type fiber.
   ad. LC connectors shall be provided for fiber optic cable termination.

ae. Armored fiber optic cable is acceptable to use.
af. All cabling will support an air plenum installation.
ag. Extension of all data and voice cables shall be within raceway, conduit, cable tray or other designated cable delivery system where concealed in walls and exposed above ceilings in plenum spaces.
ah. All grounding and bonding shall meet the National Electrical Code (NECÒ) as well as local codes, which specify additional grounding and/or bonding requirements.
ai. Conduit runs shall not exceed 100 feet or contain more than 180 degrees of bends without utilizing appropriately sized pull boxes.
aj. Data network system equipment (routers, switches) are Owner furnished and installed. PBX/VoIP system equipment (PBX/VoIP head-end, telephones) are Owner furnished and installed.

2. Contractor
   a. The contractor selected to provide the installation of this system shall be certified by the manufacturing company in all aspects of design, installation and testing of the products described herein.
   b. The contractor shall be experienced in all aspects of this work and shall be required to demonstrate direct experience on recent systems of similar type and size.

3. Integrated systems performing all functions will be provided to extent possible, subject to requirements of code for separated, independent systems.

4. Where voice and data structured cabling elements also must function as elements defined within another element group, the construction will meet the requirements of both element groups.

5. In addition to the requirements of this section, the construction will comply with all applicable requirements of Section 111 - Facility Performance, Section D - Services, and Section D7 - Telecommunications.

6. Substantiation:
   a. Preliminary Design: Provide a narrative description of systems, inter-system interfaces, and functions provided.
   b. Design Development: Details of each type of input and output device, capacities of systems, and manufacturer data. Provide calculations supporting room sizes, pathway sizing, and backbone sizing.
   c. Construction Documents: Detailed layout of input and output device locations, riser diagram, cable tray routing, telecommunications room configurations, rack configurations, installation details, and grounding connection locations.
   d. Closeout: Provide "As Built" documentation showing actual site conditions and installation as constructed. Complete functional performance testing as follows:
   e. Balanced twisted pair cable testing
      1) Testing of all balanced twisted pair wiring shall be performed prior to system cutover.
      2) 100 percent of the horizontal and riser wiring pairs shall be tested for opens, shorts, polarity reversals, transposition and presence of AC voltage.
      3) Voice and data horizontal wiring pairs shall be tested from the telecommunications outlet to the TR.
      4) Category 6A horizontal cables shall be tested according to test-set manufacturer's instructions utilizing the latest firmware and software. Contractor shall use the Fluke Networks DTX CableAnalyzer test-set with the 10Gig Copper Kit.
      5) Utilize a sampling strategy for testing AXTalk as specified in IEEE 802.3an or TIA TSB-155. Select 1% of links or 5 links - whichever is greater. Choose from the longest links.
      6) Complete, end to end, test results must be submitted in soft form to NREL.
      7) Optical Fiber Cable Testing
      8) All fiber testing shall be performed on all fibers in the completed end to end system.
      9) Testing shall consist of a bi-directional end to end OTDR trace performed per TIA/EIA455-61

or a bi-directional end to end power meter test performed per TIA/EIA455-53A.

10) The system loss measurements shall be provided at 850 and 1310 nanometers for multimode fibers and 1310 and 1550 for single mode fibers.
11) The Contractor shall test all cable prior to the installation of the cable.

B. Amenity and Comfort:

1. Accessibility: Systems will comply will requirements of local authorities for facilities for the disabled.

C. Durability:

1. Moisture Resistance and Thermal Compatibility: Materials that will resist degradation and failure of signals under ambient conditions expected.

D. Operation and Maintenance:

1. Power Supplies: As specified in Section D51.
   a. Building power with power line conditioner for all systems.
   b. Dedicated Battery Backup Power for:
      1) Emergency communications, 90 minutes.
      2) Telephone system, 90 minutes.
      3) NREL's operational computer network, 90 minutes.
2. Transmission Capacity:
   a. Data Communication Cabling: 10 megabits per second;
   b. Substantiation:
      1) Commissioning: Performance testing per latest TIA/EIA/BICSI standards.
3. Ease of Maintenance: The construction will provide communications networks that are logically arranged and well-marked, using terminal panels that provide:
   a. Connections between each voice and data outlet and patch panel in telecommunications room.
   b. Provide printed labels for all cables and cords, distribution frames, and outlet locations, according to NREL specifications. Labeling shall be in accordance with the recommendations found in TIA/EIA 606A, the manufacturer's recommendations/installation guides, and industry best practices.
   c. Point-to-point connections between each data input and output point and hub location in server room.
4. NREL Personnel Training: As specified in Section 8.9.
   a. Operational: Minimum of 8 hours, for 1 person, for each separate system.
   b. Maintenance: Minimum of 8 hours, for 1 person, for each separate system.

PRODUCTS

A. The construction shall use the following:
   1. Structured cabling system shall be an end-to-end solution from one manufacturer. Approved manufacturers are Systimax, Belden, or ADC.
   2. Fiber optic cabling and components shall be from Corning only.
   3. Equipment racks, vertical cable management, and ladder rack shall be from CPI only

END OF SECTION D71

SECTION D72
SOUND REINFORCEMENT

PERFORMANCE

A. Basic Function:

1. Provide the following sound reinforcement functions:
   a. Must interface with existing site system and provide 100% coverage throughout the facility.
   b. Sound transmission to all locations in the facility.
   c. Alarm notifications required by code, including pre-recorded emergency messages, user-recorded messages, and live announcements.
      1) Provide telephone interface module with control functions such as call answer, tone announcement before the page, and automatic preset time out.
      2) Provide number of trunk or subscriber lines based on the system configuration. One trunk or subscriber line per zone.
   d. A minimum of two auxiliary inputs to support user provided devices.
   e. Input selection switches for connecting program inputs to the distribution system.
   f. As a minimum, the system shall perform the following functions:
      1) The system will be capable of being accessed using the telephone system and broadcast to the entire facility.
      2) Do not locate speakers in private or multi-occupancy offices.
   g. Speaker Outlets: Will be provided in the following spaces:
      1) Corridors.
      2) Common areas
      3) Areas of loud ambient noise (i.e. high bays, labs, building facility/energy center, etc.).
   h. As a minimum, the speakers will provide uniform sound distribution at low levels. Corridor speakers will be spaced at a maximum of twice the ceiling height apart.
   i. System shall operate at 70 volts.
   j. Each zone shall have volume control.

2. Integrated systems performing all functions will be provided to extent possible, subject to requirements of code for separated, independent systems.

3. Where sound reinforcement elements also must function as elements defined within another element group, meet the requirements of both element groups.

4. In addition to the requirements of this section, comply with all applicable requirements of Section 111 - Facility Performance, Section D - Services, and Section D7 - Telecommunications.

5. Substantiation:
   a. Preliminary Design: Outline description of systems, inter-system interfaces, and functions provided.
   b. Design Development: Details of each type of input and output device; capacities of systems; manufacturer data.
   c. Construction Documents: Detailed layout of input and output device locations, zoning, riser diagram, interfaces, rack configurations, installation details, and grounding connection locations.
   d. Commissioning Operational Tests: Perform tests that include originating program and page messages at microphone outlets, preamplifier program inputs, and other inputs. Verify proper routing and volume levels and that system is free of noise and distortion.
      1) Signal-to-Noise Ratio Test: Measure signal-to-noise ratio of complete system at normal gain settings as follows:
         a) Disconnect microphone at connector or jack closest to it and replace it in the circuit with a signal generator using a 1000-Hz signal. Replace all other microphones at corresponding connectors with dummy loads, each equal in impedance to microphone it replaces. Measure signal-to-noise ratio.

b) Repeat test for each separately controlled zone of loudspeakers.
c) Minimum acceptance ratio is 50 dB.

2) Distortion Test: Measure distortion at normal gain settings and rated power.
   a) Feed signals at frequencies of 50, 200, 400, 1000, 3000, 8000, and 12,000 Hz into each preamplifier channel. For each frequency, measure distortion in the paging and all-call amplifier outputs. Maximum acceptable distortion at any frequency is 3 percent total harmonics.

3) Acoustic Coverage Test: Feed pink noise into system using octaves centered at 500 and 4000 Hz. Use sound-level meter with octave-band filters to measure level at five locations in each zone. For spaces with seated audiences, maximum permissible variation in level is plus or minus 2 dB. In addition, the levels between locations in same zone and between locations in adjacent zones must not vary more than plus or minus 3 dB.

4) Power Output Test: Measure electrical power output of each power amplifier at normal gain settings of 50, 1000, and 12,000 Hz. Maximum variation in power output at these frequencies must not exceed plus or minus 1 dB.

5) Signal Ground Test: Measure and report ground resistance at pubic address
   a) equipment signal ground.

B. Amenity and Comfort:

1. Accessibility: Systems will comply with requirements of local authorities for facilities for the disabled.

C. Durability:

1. Moisture Resistance and Thermal Compatibility: Materials that will resist degradation and failure of signals under ambient conditions expected.

D. Operation and Maintenance:

1. Power Supplies: As specified in Section D51 and as follows:
   a. Building power with power line conditioner for all systems.
   b. Dedicated Battery Backup Power: For:
      1) Alarm notification, 90 minutes.
      2) Emergency communications, 90 minutes.

2. Ease of Maintenance:
   a. Connections between each sound input/output station and hub in server room.

3. NREL Personnel Training: As specified in Section 8.9.
   a. Operational: Minimum of 8 hours, for 1 person, for each separate system.
   b. Maintenance: Minimum of 8 hours, for 1 person, for each separate system.

END OF SECTION D72

SECTION D73
DISTRIBUTED ANTENNA

PERFORMANCE

A. Basic Function:

1. Provide the following functions:
   a. In-building amplification for first responder communication system.
   b. Must include compatibility with NREL's current (Nextel) radio system.
   c. Provide 100% facility wide coverage.

2. Integrated systems performing all functions will provide to extent possible, subject to requirements of code for separated, independent systems.

3. Where distributed antenna elements also must function as elements defined within another element group, the construction will meet the requirements of both element groups.

4. In addition to the requirements of this section, the construction will comply with all applicable requirements of Section 111 - Facility Performance, Section D - Services, and Section D7 - Telecommunications.

5. Substantiation:
   a. Preliminary Design: Provide a narrative description of systems, inter-system interfaces, and functions provided.
   b. Design Development: Details of each type of input and output device, capacities of systems, and manufacturer data.
   c. Construction Documents: Detailed layout of input and output device locations, zoning, riser diagram, interfaces, rack configurations, installation details, and grounding connection locations.
   d. Commissioning Operational Tests: Perform tests as directed by manufacturer's specifications.

B. Amenity and Comfort:

1. Accessibility: Comply will requirements of local authorities for facilities for the disabled.

C. Durability:

1. Moisture Resistance and Thermal Compatibility: Materials that will resist degradation and failure of signals under ambient conditions expected.

D. Operation and Maintenance:

1. Power Supplies: As specified in Section D51.
   a. Building power with power line conditioner for all systems.
   b. Dedicated batter backup for emergency communications, 90 minutes

2. East of Maintenance:
   a. Connections between antenna and hub in server room.

3. NREL Personnel Training: As specified in Section 8.9
   a. Operational: Minimum of 8 hours, for 1 person, for each separate system.
   b. Maintenance: Minimum of 8 hours, for 1 person, for each separate system.

PRODUCTS

A. The construction shall use Andrew Ion Series B Britecell Multi -Band, Multi-Operator Optical Distribution System.

END OF SECTION D73

SECTION D 8
RESEARCH UTILITIES

PERFORMANCE

A. Basic Function:

1. Provide process utilities consisting of process exhaust, fume hood exhaust, process cooling water, waste heat water loop, Campus chilled water, Campus heating water, research chilled water, research heating water, research fuel lines (Hydrogen, fuel oil, biodiesel, natural gas), DI water, SCADA Monitoring and Control System, Research Electrical Distribution Bus system and process gases for the laboratory and building functions as described in the program and performance specifications. See also section 5 for general descriptions.

2. All process utilities, components and systems will be considered as part of the research systems and not the building systems. All research systems shall be connected to the research supervisory control and data acquisition (SCADA) control system with monitoring only from the building Direct Digital Control (DDC) system.

3. After contract award and during preliminary design confirm all process and equipment loads with NREL Researchers and provide the necessary utilities and distribution to meet the loads.

B. Amenity and Comfort:

1. Research Electrical Distribution Bus (REDB) System: (Refer to Section D59 for more information)
   a. Provide laboratory research AC and DC bus power utilities to provide electrical interconnection points for research experiments.
   b. Provide a sufficient number of AC and DC Research Buses to support concurrent, individual experiments and testing.
   c. The architecture, ratings and configuration of the bus work shall be designed to accommodate multiple, simultaneous experiments.
   d. The design shall be flexible enough to configure many different types of experiments using multiple AC and DC buses.
   e. Provide the capability to isolate sections of the buses within satellite labs for local lab testing with no connection to the building-wide research buses.
   f. All buses, wiring and devices shall comply with local NREL electrical safety standards
   g. Provide capability to lock-out and tag-out all potential energy sources connected to the system when doing service, wiring, or connecting experiments to the system.
   h. The bus design shall allow for expansion and/or reconfiguration without major laboratory disruption, for instance, the addition of a parallel bus to the existing system or the addition of additional devices or test stations.
   i. Provide access to the REDB to the following labs: Highbay Lab Areas, Energy Storage, Smart Grid Components Lab, Power Electronics Lab, Instrument Development Lab, Hydrogen Systems Lab, Fuel Cell Lab, High Voltage/ High Current Lab, Outdoor Test Area, and Roof Test Area
   j. Provide a Supervisory Control and Data Acquisition (SCADA) System for the REDB. The SCADA System must be connected to computers located in the Highbay Control Room and Electrical Visualization Room.
   k. Provide for electrical interconnections for fused disconnects on each bus spaced every 3 feet inside a laboratory. Typically 10 connection points per small laboratory
   l. The REDB shall provide four independent AC bus ducts with current ratings of 2500A, 1600A, 200A, and 200A
   m. The REDB shall provide four independent DC bus ducts with current ratings of 2500A, 2500A, 200A, and 200A
   n. Provide easy access to fused disconnects on both the AC and DC buses
   o. All relay units making and breaking connections to the buses and devices shall be fully (open/close) and have the following functionality: Shunt trips; A and B type contacts; Circuit breaker functionality to protect itself and the bus from over-current

p. Provide fused safety disconnects (FD) at each device including utility connection with both lug and plug connectivity
q. In addition to device FDs, there shall be manual safety disconnects and lockouts to provided as necessary to isolate the research buses for service
r. Current carrying elements of the REDB shall be made from copper.
s. Minimum 25 KAIC interrupt rating for the DC systems.

2. Supervisory Control and Data Acquisition (SCADA) Control and Monitoring System:
   a. Provide a centralized SCADA system. The system shall be located in the Highbay- Control room. This location would allow for switching of each controllable piece of the REDB and provide supervisory data acquisition from nodes on the REDB.
   b. The system shall be used to control, monitor and collect data for all research utilities including the REDB, research fuels, research chilled water and research heating water and interconnection controls to the process utility systems.
   c. Provide display at each laboratory of current operating status
   d. Devices may be connected or disconnected from any bus using a matrix of SCADA-controlled contactors. Other devices must be coupled with remote, addressable connection stations.
   e. Connection, protection and monitoring of each device must be controlled via the master supervisory, control and data acquisition system (SCADA A control system shall provide the ability to control all relays connecting and disconnecting devices and buses.
   f. A monitoring system shall monitor and record the status of each breaker at the master station. The monitoring system shall allow remote access to monitor system operation and view data via secure connection.
   g. Protection for all devices and buses shall be integrated into the relays, monitoring and control equipment.
   h. A data acquisition system shall have sufficient capacity to record 1 second data (voltage, current, frequency, real power, reactive power) for 484 hours and store this data onto a permanent system.
   i. The data acquisition system shall have the capability to record events based on triggers at 128 samples per cycle (for 60 Hz systems) for 5 seconds. This captured data shall be accurately time-stamped and saved to a permanent storage system.
   j. A utility grade metering system shall provide revenue grade metering at certain device connection points. This metering needs to have the ability to send information back to a central location in the control room. It must be able to accurately measure fully unbalanced 3 phase devices connected in either 4 wire wye or delta
   k. Any power measuring equipment will comply with IEC 61000-4-30 class A devices.
   l. There shall be provisions for lab-to-lab communications and Smart Grid technology compatibility.
   n. Wherever possible, the control, monitoring, metering, protection, and data acquisition functionality for each addressable shall be integrated into a single unit.
   o. For all research mechanical utilities, the SCADA control system shall meter, display and control system temperatures, flow rates and pressures. All automatic isolation valves, which connect to the building systems and are used to isolate different components within the system, shall be controlled the SCADA system. The SCADA system shall monitor the building systems such as building chilled water, heating water, waste heat loop, cooling tower process cooling loop for temperatures, flows and pressures to determine if those systems will provide the necessary cooling or loading for the research experiments. The SCADA system will not control building system mechanical utilities.
   p. The SCADA system shall also control the research chilled water system, research heating water system and research fuels systems Section D36 defines the minimum level of control points needed for the research chiller and boiler systems.
   q. Provide alarming functions should any of the systems shut down for safety, such as the hydrogen system shutting down based upon flame detection (UV/IR) through the fire alarm system.

3. Process Exhaust:
   a. Provide a process exhaust system consisting of utility set fans, duct distribution, manual volume dampers and duct drops uniformly distributed within the laboratories for connection of flexible exhaust duct from an experiment to the process exhaust system. Provide duct work materials, fan components and dampers to be compatible with exhaust system effluent and temperatures. The duct drops within the individual laboratories shall be 6" drops down to 8'6" above the finished floor with a tight shut off manual volume damper. Provide a variable frequency drive (VFD) on the exhaust fans controlled off of exhaust system static pressure.

4. Fume Hood Exhaust:
   a. Provide a variable air volume (VAV) fume hood exhaust systems integrated with fume hood controls to help minimize energy usage. Ductwork materials and exhaust fans shall be selected based upon the fume hood materials and temperatures.

5. Process Cooling Water:
   a. Provide a six-inch process cooling water loop from the building condenser water system to all laboratories routed in the lab service corridor.
   b. Provide full size automatic two position control valves in the 6" piping mains where the piping enters the lab area. Provide leak detection in service corridor to close isolation valves in case of a leak.
   c. Provide 2" process cooling taps with valves for take offs to each laboratory. Provide a minimum of 10% extra 2" taps on the supply and return piping with valves evenly spaced along the line for the main for future connections. Provide calibrated balance valves with flow meters at each tap.

6. Waste Heat Water Loop:
   a. Provide a piping loop to carry waste heat recovered from the high performance computer data center (HPCDC) to distribute throughout the ESIF building for comfort heat needs, preheat of domestic hot water, research heating needs within laboratories, exporting heat to the Campus waste heat water loop and any other uses beneficial for the building or the Campus. Provide a 4" waste heat water loop with automatic control valves interfaced to the SCADA control system and distributed to the laboratories.

7. Campus Chilled Water:
   a. Provide 4" chilled water connection for research purposes, with automatic control valves interfaced to the SCADA control system and distributed to the lab area.

8. Campus Heating Water:
   a. Provide 4" heating water connection for research purposes, with automatic control valves interfaced to the SCADA control system and distributed to the lab area.

9. Research Chilled Water:
   a. Provide a complete research chilled water system consisting of piping distribution, pumps, control valves and devices connected to the research chiller identified in the programming requirements for the Research Heating/Cooling Loops. Provide 4" chilled water distribution with approximately 55% propylene glycol for operation from -40°C to 25°C. The 60-Ton nominal capacity is required with a chilled water supply temperature of 45 deg. F and a return temperature of 57 deg. F. The chiller will be water cooled through the building condenser water system. Provide plate and frame heat exchanger with control valves that are controlled through the SCADA system for water side economizer capability. Provide connections to the condenser water system such that piping that can be interfaced to either the building waste heat water loop, Campus heating water loop or research boiler loop for false loading of the chiller. This research chilled water loop shall have a significant amount of flexibility to control temperature, flow rates, pressures and loads. The SCADA control system will control the chiller pumps and control valves based upon optimization of energy usage and the experiment to be performed. Refer to the individual D99 laboratory performance specifications for additional requirements.

10. Research Heating Water:
    a. Provide a complete research heating water system consisting of pumps, piping distribution, control valves and devices connected to the research boiler identified in the programming requirements for the Research Heating/Cooling Loops. This research heating water loop shall parallel the research chilled water loop to provide heating water from 25°C to 85°C. Provide connections by means of automatic controls valves to the building waste heat water loop and Campus heating water loop. These control valves shall be interfaced to the SCADA control system to optimize energy efficiency based upon the water temperature requirements of the individual experiments. As with the research chilled water loop a significant amount of flexibility needs to be provided within this system to utilize the research heating loop for various experiments including, false loading of the research chiller. The design should incorporate provision of plate and frame heat exchangers for connection of different systems.

11. Research Fuel Lines (Hydrogen, Diesel, Biodiesel and Natural Gas):
    a. Hydrogen:
        1) Provide two (2) separate central piped hydrogen systems for the laboratory areas. The first system shall be distributed from to the hydrogen storage tank with hydrogen generated at the facility. The second system will be distributed from to a hydrogen cylinder manifold system. Piping shall be rated for working pressure of 10,000 psi. Provide regulators at laboratories for working pressure range of 80 to 200 psi.
        2) Provide high pressure piping system from the hydrogen production areas to the outdoor storage tanks. Operational storage pressure is 10,000 psi.
        3) Provide 316L stainless steel with electro polished 10 Ra internal finished tubing with welded joints and a minimal amount of fittings. Provide VCR® Type metal gasket fittings for isolation valves. Fittings shall not be used except within the ventilated laboratories and at the ventilated manifold.
        4) Provide an excess flow valve at each source. Provide excess flow valves for individual lab. Excess flow valves should be accessible from ground level. Provide manual shutoff valves at the source and the point of use within each laboratory. Excess flow valves shall require manual re-opening after activation. Provide remote shutoff of hydrogen from any of the laboratories.
        5) Provide automatic shutdown of hydrogen at the source from an input of EPO, gas monitor or fire alarm.
        6) Provide gas monitoring for each area with hydrogen. Monitors shall be maintainable from the floor level.
        7) Gas detection alarms shall be monitored at a central location, preferably co-located with the fire command center to establish an emergency control station. Provide audible and visible alarms within the laboratories when gas is detected.
        8) Provide a monitoring and alarm system that has full capability of monitoring, control and alarming for process gases and research fuels (hydrogen). This system shall be an addressable system to monitor and control each individual device. The system shall have 50% expansion capability for adding future devices. Laboratory emergency shutdown push buttons shall interlock through this system to shut down the appropriate gases and hydrogen systems. Shut down capability shall be at the individual lab level, major areas and the entire gas or fuel system. The system shall interface to the fire alarm system as necessary for the hydrogen UV/IR flame detection. The system shall interface to alarm at the Site Entrance Building (SEB). Location, quantity and type of gas monitoring and front end control shall be approved by NREL Environmental Health and Safety (EHS).
            a. Substantiation - Preliminary Design - Provide system architecture diagram, equipment cut sheets, preliminary wiring diagrams, system interfaces and sequences of operation.
        9) Provide maximum 2" hydrogen distribution mains from the source to the laboratories sized appropriately for the expected laboratory usage. Prior to entering the building the 2inch distribution line pressure will be regulated down to 200 psi mean operating pressure.

Provide hydrogen piping distribution within the laboratories sized appropriately for the expected flow rates and pressures (maximum ½ inch). The only high pressure hydrogen (10,000 psi or greater) to be supplied inside the facility if for the High Pressure Test Laboratory which requires maximum ½ inch size tubing. Confirm all process and research loads with NREL Researchers during preliminary design and adjust pipe sizing as appropriate.

10) Provide high pressure hydrogen relief vents to the outside to prevent over-pressurization of systems. Provide relief vents for use of electrolyzers inside the building.
11) Provide UV/IR detection in all areas of hydrogen production, compression, and fuel dispensing.
12) Provide flame arrestors that are specifically designed for Hydrogen in a sufficient number and location to prevent flame spread in hydrogen fuel lines.

b. Biodiesel:
   1) Provide a separate biodiesel fuel distribution system from a 500 gallon outdoor above ground biodiesel storage tank to the laboratories as required. Comply with all codes, NREL standards and regulations as identified for diesel fuel oil.

c. Natural Gas:
   1) Provide natural gas services as identified for laboratory use in accordance with NFPA 54 National Fuel gas code and the International Fuel Gas Code.

d. Diesel Fuel Oil:
   1) Provide fuel oil distribution from a 500 gallon outdoor above ground fuel oil storage tank to laboratories as required. Comply with NFPA 30, NFPA 31, NFPA 37, and International Building Codes and local fire department codes. Provide fusible link valve at the piping entrance to the building. Provide double wall piping, secondary containment and fuel leak alarms. All piping, valves, fittings, and devices shall be suitable for fuel distribution.
   2) A separate fuel oil storage and distribution system shall be provided to support the building backup power generators. The above ground storage tank shall be sized to provide the necessary run time of the backup power system in accordance with the code requirements.
   3) The NREL standard for ASTs is the State Oil Inspection Section's Storage Tank Regulations, 7CCR 1101-14. Additional requirements are as follows:
      a) Provide a means to collect spills, drips, and overfills from the fuel nozzle.
      b) Provide an interstitial monitor/alarm with test capability and remote alarm function. Pop-up indicator is not acceptable.
      c) Tank and genset shall be separately grounded, not bonded together.
      d) Normal vent shall be 12 feet in the clear with a spark arrestor.
      e) Double walled tanks shall have an interstitial monitor/alarm with a test capability (pop-up indicator is not acceptable).
      f) Fill cap shall be secured either with a lockable cap or locked generator enclosure.
      g) The fill pipe shall incorporate means to collect drips, spills, and overfills from the fuel nozzle (such as an integral containment basin around the fill pipe).
      h) Tank and genset must be separately grounded (not bonded together).
      i) Written specifications, operating and maintenance documentation is required for the tank, and tank systems (liquid level sensor, interstitial monitor, etc.).
      j) A fenced area is not required provided all equipment openings and controls are inaccessible to vandals.
      k) Underground fuel oil tanks are prohibited.

12. DI Water:
    a. Provide either a centralized DI water system or individual point-of-use DI water systems within the service corridor for all DI water needs within the laboratories. Provide packaged DI water system to provide 18 mega-ohm-cm resistive DI (ASTM Type I) water at the point of use. Piping fittings, valves and devices shall be suitable for DI water use. Provide zero dead-leg point of use faucets and DI recirculation systems as necessary.

14. Process Gases:
    a. Provide process gases as identified in Section D83.

15. Substantiation: Provide the following information for all processed utilities listed:
    a. Preliminary design:
        1) Provide one-line diagrams of the systems and all the interconnection to other systems. Provide pipe size and load information.
        2) Provide piping layout design including isolation valves and automatic change over valves.
        3) Provide control diagrams and sequences of operation specifically outlining which controls are the SCADA controls and what are building DDC controls.
    b. Design Documents:
        1) Final piping design layouts showing complete interconnection of all research piping loops and building system piping.
        2) Complete control system diagrams identifying all points monitored and controlled.
        3) Confirmation that the final design meets all the standards and safety requirements.
        4) Provide equipment schedules, specifications and design criteria summary for all systems.
    c) Construction:
        1) Provide functional tests reports that all systems achieve the necessary temperature, flow, and pressure requirements. Provide documentation that the DI water quality is achieved at each outlet. Provide test and balance report for all hydronic and air systems.
        2) Provide pressure testing and leak testing of complete hydrogen distribution systems. Test protocols shall be reviewed and approved NREL EMS office.

C. Health and Safety:
    1. Provide all necessary pressure relief valves to prevent over pressurizing of the systems.
    2. Provide automatic shut off valves and gas monitoring for the Hydrogen system and ventilated enclosures for Hydrogen regulators.

D. Durability:
    1. Provide piping systems compatible with materials and fluids in the system. Provide components with minimum 20 year service life without major repairs.
    2. Pressure ratings: Provide piping, valves and devices with pressure ratings of 1.5 times the operating pressure of the system in which they are installed.
    3. Provide piping insulation in accordance with code requirements for the expected temperatures of the piping systems.
    4. Provide piping loops, expansion compensation, anchors and guides to prevent excessive stress of the piping systems components due to expansion and contraction of the piping.

E. Operation and Maintenance:
    1. Arrange piping valves and connections for laboratory experiments such that a minimum amount of water needs to be drained for connection and disconnection of the lab experiments. Provide means for draining and air elimination in the hydronic systems for connection of lab equipment.
    2. For the process utility and piping layouts, allow adequate space to add future piping or future piping connections to all systems.
    3. Labeling: Piping systems shall be painted in accordance with NREL standards. All mechanical utilities shall be labeled indicating the service provided with flow direction arrows. Labeling shall be provided on both sides of wall penetrations at branch take off and a minimum of 20 ft. on center along the pipe line.

END OF SECTION D8

SECTION D83
PROCESS GASES

PERFORMANCE

A. Basic Function:

1. Provide laboratory gases necessary for laboratory use as identified in the Program, Section D99 and other portions of the performance specifications.

2. Provide house gases consisting of compressed air and nitrogen. Hydrogen is considered a research fuel and is defined in the Research utilities section. These gases shall be distributed from the source to the laboratories within the same service corridor. Flow rates and distribution pipe sizes shall be extracted from NREL Researchers after contract award. For the RFP response provide piping mains in the service corridor sized as follows:
   a. Compressed Air: 2 inch
   b. Nitrogen: 1 inch

3. Distribution from the piping main to the Lab shall be sized as follows:
   a. Compressed Air: ¾"
   b. Nitrogen: ¾"

4. Bottled gases located in the service corridor in cylinder racks or ventilated gas cabinets will consist of oxygen, helium, argon and other gases listed in the D99 sections and the Program. Provide gas manifold and piping distribution to the laboratories.

B. Amenity and Comfort:

1. Compressed Air Systems:
   a. Provide water cooled oil-less rotary screw air compressor with a variable speed drive. Provide 100 psi at the most remote outlet with all outlets in use. Minimum compressor discharge pressure shall be 125 psi.
   b. Provide discharge air/water separator, air receiver, refrigerated or desiccant-type air dryer, and 10-micron compressed air system pre-filters and 1-micron/1 PPM final filters.
   c. Provide individual filter regulators for each compressed air drop identified and at each equipment connection.
   d. Compressed Air Piping:
      1) Provide minimum one-half-inch Type K or L copper tubing (ASTM-B819) hard drawn, seamless copper tubing. Provide oxygen clean grade piping. Provide brazed joints.
      2) Provide full port ball valves for servicing of all equipment and for system flexibility, to isolate branches and mains for future expansion or for system modifications.
      3) Distribution shall be sized to provide extra storage at two times of maximum demand. Provide air receiver at remote portion of the distribution system.

2. Vacuum Systems:
   a. Provide individual vacuum pumps and piping distribution for each lab as identified in Section D99. Vacuum pumps will be located in Service Corridor.
   b. Provide Type L hard drawn copper tubing (ASTM-B819) with long turn fittings, y-fittings and silver solder joints. Provide full port ball valves or butterfly valves.

3. Nitrogen
   a. Provide nitrogen cylinder manifold or Membrane Type Nitrogen Generator or a vaporizer to supply gaseous nitrogen from an existing liquid nitrogen source to support the nitrogen needs for the building.
   b. Provide 100 psi nitrogen distribution to all laboratories indicated in Section D99.
   c. Provide minimum one-half-inch Type K or L hard drawn copper tubing (ASTM-B819) oxygen clean-grade with brazed fittings.

d. Provide full port ball valves for laboratory gas shutoff as well as at branch piping and in the mains as appropriate to allow maximum flexibility for expansion and laboratory shutdowns.
e. Nitrogen shall be provided to all laboratories that utilize hydrogen for purging purposes and at all hydrogen sources.

4. Oxygen, Argon, Helium and other point of use gases:
   a. Provide pressure regulator manifold for gas cylinders to be located in ventilated storage cabinets within the service corridor. 1/4 inch to 1/2-inch stainless steel tubing will be provided depending on load from the manifold to the workbench and/or equipment as identified in Section D99.

END OF SECTION D83

SECTION D9
OTHER SERVICES

PERFORMANCE

A. Basic Function:

1. Other services include:
   a. Surveillance and Security Controls (D92): Elements for intrusion detection, access control, and visual and auditory monitoring.
   b. Special Grounding Systems (D93): Elements for lightning protection, fence grounding, and raised access floor grounding.
   c. Cathodic Protection (D94): Elements for supplementary corrosion prevention using cathodic protection.
   d. Laboratory Service Elements (D99)

B. Where services elements also must function as elements defined within another element group, meet requirements of both element groups.

END OF SECTION D9

SECTION D92
SURVEILLANCE AND SECURITY CONTROLS

PERFORMANCE

A. Basic Function:

1. Provide remote surveillance of specified areas, intrusion detection, and automatic and remote control of access to building areas, as required by the code, the Program, and as follows.
   a. For new construction or significant building additions, security requires a minimum of 100 square feet of secured space located where the utilities enter the building.
   b. All operable windows (within 18 ft.) from the ground must be sealed or alarmed. Operable windows shall meet requirements set forth in DOE M 470.4-2. A variance to the DOE security requirement can be sought but approval is not guaranteed. The requirement can be found in DOE O470.4-2.
   c. Security alarms and electronic access control devices must be compatible with current systems and devices and connected to back-up power. Additional Security devices may require additional system controls and connectivity to handle the load.
   d. Security and Emergency Management system wires must be in conduit (except public address system). Use fiber optic cable where appropriate.
   e. Exterior data cable including Outside Plant (OSP) access must be secured (locked).
   f. Doors with electronic access door equipment (card readers) require the ability to secure if back-up power fails (electric strike or handset).
   g. Appropriate exterior (building and parking) security lighting and digital cameras are required. While specific details will be project dependant, Security generally plans camera coverage as follows:
      1) Existing site camera coverage is approaching 100%. New construction must include cameras to overcome coverage deficiencies created.
      2) Cameras must cover exterior doors.
      3) Card reader doors must have cameras to identify persons entering and leaving.
   h. Additional cameras may require additional system controls and connectivity to handle the load.

2. Security Components:
   a. Card readers w/keypads (Access Control System) locations will be determined by Security or the needs of the area user.
      1) Exterior card reader entrances while limited to as few as possible must be placed to facilitate the flow of pedestrian traffic.
      2) Card readers must be placed on the interior doors of vestibules consisting of interior and exterior doors.
      3) Interior card readers are required for controlled areas (computer rooms, high-security areas, high-hazardous areas, Special Access Areas, Special Protective Areas, and doors used as separators from reception areas, etc.).
   b. Door Position Switches (DPS)
      1) Must be placed on all exterior doors and openings (i.e. roof hatches).
      2) Must be placed on interior doors with card readers, doors designated by Security (i.e., Special Access Areas, Special Protective Areas, and doors used as separators from reception areas, etc.).
   c. Intercoms w/master station
      1) 2-way intercoms must be included at main card reader entry points. Telephones can be used for this function. The number of intercoms will depend on the building position and people flow.

3. Remote Surveillance System (cameras)
   a. Exterior Pan/Tilt/Zoom (PTZ) cameras must provide 100% exterior coverage of the facility. Fixed cameras will be placed at exterior card reader entrances to capture full view of person(s) entering

and leaving the facility. Additional interior cameras are required to monitor and higher security areas as determined by security or the user.

4. Digital Video Recorders (DVR) require minimum of 1 TB of memory per every eight cameras.

B. Door Hardware

1. Electric strike or handset hardware on card readers controlled doors (no mag-locks).
   a. Card reader door hardware must include NREL controlled key override.
      1) Door hardware must be Grade 1 mortised locksets, compatible with NREL's patented Keymark interchangeable cores.
      2) Cores to be provided by builder (Oak Security is NREL's vendor for patented cores).

2. Sound Communication Functions:
   a. Public address and alarm notifications, including pre-recorded emergency messages (refer to Section D72)
   b. Connection between security communications and public telephone system (refer to Section D7).
   c. Point-to-Point Voice Stations: Required in the following spaces:
      1) Each entrance, both outside and inside.

3. Data Communications Functions: As required to accomplish security functions.
   a. Connection between Internet and internal network.
   b. Connection between campus central system and building system.

4. Visual Communications Functions:
   a. Point-to-Point Video Communication:
      1) Visual monitoring, for intrusion detection and access/entry control.

5. Access/Entry Control and Intrusion Detection Functions: See definition of security zones in Section 111.
   a. Public Access Zones Outdoors: Remote visual monitoring.
   b. Doors Between Public Access Zone and Reception Zone: Remote visual monitoring.
   c. Operations Zone Entrances: Remote visual monitoring.
   d. Inside Operations Zone: Remote visual monitoring, at large open areas.
   e. Secure Zone Entrances: Remote visual monitoring, door status monitoring, keyless entry for occupants, and remote locking/unlocking.
   f. Inside Secure Zone: Remote visual monitoring.
   g. High-Security Zone Entrances: Remote visual monitoring.
   h. Inside High-Security Zone: Remote visual monitoring.
   i. Recording of door status changes and proper and improper access attempts.
   j. Continuous recording of visual monitoring.
   k. User-programmable entrance controls.
   l. Real-time status display of all controlled and monitored points; display located in security office.
   m. Hard-copy output of cumulative status reporting.
   n. See Sections B23 and C12 for mechanical locking devices required.

6. Where surveillance and security control elements also must function as elements defined within another element group, the construction will meet the requirements of both element groups.

7. In addition to the requirements of this section, the construction will comply with all applicable requirements of Section 111 - Facility Performance and Section D - Services.

8. Substantiation:
   a. Preliminary Design: Provide a narrative description of systems, inter-system interfaces, and functions provided.
   b. Design Development: Details of each type of input and output device; capacities of systems; manufacturer data.
   c. Construction Documents: Detailed layout of input and output device locations, riser diagram,

interfaces, rack configurations, installation details, and grounding connection locations.

1) Commissioning Operational Tests: Perform tests as directed by manufacturer's specifications and complete functional performance testing as specified in Section 8.9, under Commissioning.

C. Amenity and Comfort:

1. Accessibility: Systems will comply with requirements of local authorities for facilities for the disabled.

D. Health and Safety:

1. Fire Safety Functions: In accordance with code and Section D43.

E. Durability:

1. Moisture Resistance and Thermal Compatibility: Materials that will resist degradation and failure of signals under ambient conditions expected.

F. Operation and Maintenance:

1. Power Supplies:
   a. Building power with power line conditioner for all systems.
   b. Dedicated Battery Backup Power: For:
      1) Access/entry controls: fail-secure, 90 minutes.
      2) Intrusion detection, 90 minutes.
      3) Video surveillance, 90 minutes

2. Ease of Operation:
   a. Time/date displays centrally synchronized and adjustable.
   b. Minimum of one centralized monitoring display for all systems will be provided; locate in security office.
   c. Keyless Entry Devices: Reprogrammable from central control location.

3. NREL Personnel Training: As specified in Section 8.9.
   a. Operational: Minimum of 8 hours, for 1 person, for each separate system.
   b. Maintenance: Minimum of 8 hours, for 1 person, for each separate system.

PRODUCTS

A. The construction shall use components fully compatible with the existing Software House C-Cure 800 System (CCM80-20S) without alternation and be Software House factory approved for compatibility.

B. The construction shall use the following card reader:
   1. HID model ProProx w/keypad 5355 AGS - black

PRODUCTS

A. The construction shall use components fully compatible with the existing Software House C-Cure 800 System (CCM80-20S) without alternation and be Software House factory approved for compatibility.

B. The construction shall use the following card reader:
   1. HID model ProProx w/keypad 5355 AGS - black

END OF SECTION D92

SECTION D93
SPECIAL GROUNDING SYSTEMS

PERFORMANCE

A. Basic Function:

1. Provide grounding systems that:
   a. Provide protection from lightning strikes; scope and design of protection as defined in Section 111.
   b. Reduce static electricity and transient and induced current in raised access flooring and electronic equipment cabinets, racks, and supports.
   c. Comply with applicable recommendations of IEEE 142-1991 and IEEE 1100-2005.

2. Where special grounding systems and elements must also function as elements defined within another element group, the construction will meet requirements of both element groups.

3. In addition to the requirements of this section, the construction will comply with all applicable requirements of Section 111 - Facility Performance, Section D - Services, and Section D9 - Other Services.

B. Amenity and Comfort:

1. Appearance: Concealed grounding conductors and ground terminals wherever possible.

C. Health and Safety:

1. Lightning Protection System Minimum Capacity:
   a. Maximum Ground Resistance: 10 ohms, between any individual down conductor and ground.
   b. Main and Bonding Conductors: Solid and braided copper as required by code.
   c. Substantiation: As specified in Section 111.

D. Durability:

1. Expected Service Life Span of All Grounding Systems: Life of the building without requiring any more maintenance than annual inspection and minor repairs not more frequently than annually.
   a. Substantiation:
      1) Design Development: Maintenance analysis.
      2) Closeout: Maintenance schedule and instructions.

2. Lightning Protection Elements: Minimum quality demonstrated by listing or labeling by UL.

3. Lightning Protection Strike (Air) Terminals: Sheet metal elements less than 3/16 inch (4.8 mm) thick are likely to be damaged (punctured) by direct lightning strikes and may not be used as strike (air) terminals.

E. Operation and Maintenance:

1. Raised Access Floor: Provide a signal reference grid or plane for the entire raised floor area as high-frequency ground for electronic equipment.
   a. Comply with recommendations of IEEE 1100-2005.
   b. Conductor Maximum Impedance: 23 ohms per 12 inches (305 mm) of ground conductor at frequency of 1 kHz.
   c. Ground: Multi-point bonding to all metallic objects crossing grid, including structural elements within 6 feet (1820 mm) of grid.
   d. Substantiation:
      1) Design Development: Engineering analysis of actual grounding requirement and method of accomplishment.

PRODUCTS

A. Lightning Protection Conductors:

1. Use one or more of the following:
   a. Stranded copper cable.
   b. Solid copper strip.

B. Raised Access Floor Grounding:

1. Use one or more of the following:
   a. Braided copper conductors.
   b. Copper straps.

END OF SECTION D93

SECTION D94
CATHODIC PROTECTION

PERFORMANCE

A. Basic Function:

1. Cathodic protection will be provided for the following elements:
   a. Submerged metal pipes, ducts, conduits, tanks, and structural elements.
   b. Buried metal piping carrying petroleum products or other hazardous or toxic materials, where installed without means of visual observation of entire exterior surface of piping.
   c. Other buried metal pipes, ducts, conduits, tanks, and structural elements outside the building.
   d. Other buried metal elements, if post-occupancy tests determine AC or DC electrical currents to be present in the ground.

2. In addition to the requirements of this section, the construction will comply with all applicable requirements of Section 111 - Facility Performance, Section D - Services, and Section D9 - Other Services.

B. Amenity and Comfort:

1. Appearance: All portions of cathodic protection systems will be concealed.

C. Durability:

1. Corrosion Prevention by Cathodic Protection: Designed and constructed in accordance with NACE RP0169-1996(R2002) and NACE RP0285-2002; either galvanic anode or impressed current system.
   a. Design of Protected Elements: In addition to requirements specified elsewhere, as specified in NACE RP0169-1996(R2002) and NACE RP0285-2002, including coatings.
   b. Measurement Techniques: As specified in NACE TM0497-2002.
   c. Substantiation:
      1) Commissioning: Tests to verify achievement of cathodic potential or polarization required by design; documentation of operating parameters in accordance with applicable NACE standard.
      2) Closeout: Maintenance instructions; include copy of applicable NACE design standards.
      3) Occupancy: After one month of full occupancy and activation of all services and again at the end of one year, tests to determine if AC or DC currents or potentials exist between buried metal elements and the ground; addition, replacement, or enhancement of cathodic protection as necessary to achieve protective effect.

D. Operation and Maintenance:

1. Ease of Maintenance:
   a. Anodes: Located for ease of replacement; locations recorded in project record documents.
   b. Test Stations: Permanent testing stations and test equipment for periodic measuring of cathodic potential, as specified in NACE RP0169-1996(R2002) and NACE RP0285-2002 and at minimum of 2 locations.
   c. Impressed Current Type: Monitoring panel for electrical equipment located in a utility room, with separate readouts for each current source, display of last inspection date, and storage for maintenance records.

END OF SECTION D94

SECTION D99
LABORATORY SERVICES ELEMENTS

PERFORMANCE

A. Basic Function:

1. The information contained herein is intended to compliment the program requirements and laboratory equipment list to identify and elaborate on unique requirements of the laboratory. Refer to other performance specifications and Section D Services for Mechanical, Electrical, Plumbing and Low Voltage system performance requirements.

2. The design builder shall utilize load information provided in the equipment list, program and performance specifications for the response to the RFP. After contract award, the design builder shall determine all mechanical and electrical utility loads for equipment and general use in the laboratory by extracting the load information from the NREL Researchers.
   a. Substantiation:
      1) Preliminary Design:
         a) Submit analysis and documentation of all equipment and utility loads. Provide equipment lists summarizing all mechanical and electrical utilities and the associated load, heat release, voltage, current and utility connections.

B. Amenity and Comfort:

1. Provide normal power, backup power, phone and data connections necessary for the Rear-Projection display equipment, screen, workstations, audio system and other equipment identified. Refer to project program.

C. Operation and Maintenance

1. Substantiation
   a. Provide functional testing of building HVAC, electrical and IT systems.

END OF SECTION D99

SECTION D99A
FUEL CELL LABORATORY

PERFORMANCE

A. Basic Function:

1. The information contained herein is intended to compliment the program requirements and laboratory equipment list to identify and elaborate on unique requirements of the laboratory. Refer to other performance specifications and Section D Services for Mechanical, Electrical, Plumbing and Low Voltage system performance requirements.

2. The design builder shall utilize load information provided in the equipment list, program and performance specifications for the response to the RFP. After contract award, the design builder shall determine all mechanical and electrical utility loads for equipment and general use in the laboratory by extracting the load information from the NREL Researchers.
   a. Substantiation:
      1) Preliminary Design:
         a) Submit analysis and documentation of all process utility loads. Provide equipment lists summarizing all mechanical and electrical utilities and the associated load, flow rate, voltage, current and utility connections.

B. Amenity and Comfort:

1. Environment
   a. Temperature/Humidity: Standard temperature and humidity ranges per Facility Performance Section III. Maintain humidity between 25% and 50% RH. Humidity and temperature monitoring and recording shall be provided.
   b. Light levels:
      1) Provide 20 footcandles average in the space.
      2) Provide 50 footcandles average on the work surfaces.

2. Provide the following systems:
   a. Provide 1/2" Hydrogen with (6) valved takeoffs evenly distributed throughout the laboratory.
   b. Provide 3/4" Nitrogen with (6) valved takeoffs evenly distributed throughout the laboratory.
   c. Provide 3/4" Compressed Air. Distribute evenly throughout the lab with (6) valved takeoffs.
   d. Provide 1/4" Argon, oxygen and helium from bottles located in lab services corridor with (3) valved takeoffs distributed to lab benches.
   e. 18 megaohm Deionized Water - 1 lph. Distribute evenly throughout the laboratory with (3) valved takeoffs. DI water usage should be metered and monitored to shut down DI water in case of leak.
   f. Provide 1" Vacuum with (6) valved takeoffs evenly distributed throughout the laboratory.
   g. Hydrogen Generator (PEM electrolyzer) will require power and DI water connections.
   h. Drain system - floor drains within the lab space shall not be provided. Provide a drain system for fuel cell clean waste and as needed for DI water system drain down.
   i. Exhaust distribution needs to be provided over the top of the fuel cell testing benches. 4" shall be provided for connection locally at each fuel cell setup.
   j. Normal power requirements
      1) Provide convenience outlets at 10' minimum spacing on walls
      2) Provide power as required for equipment.
      3) Provide 208 volt single phase outlets (30 amp) at 6' OC above work surfaces.
      4) Provide surface raceway above the work surfaces with outlets 24" OC.
   k. Backup power requirements
      1) Provide UPS power with normal power at computer locations.
   l. Special Fire Alarm

1) No Special Fire Alarm Requirements.

m. Other Alarms
   1) Audible and visual Hydrogen System alarms.

n. Security requirements
   1) No Special Security Requirements.

o. Overhead Cable tray
   1) Provide Overhead Cable Tray along Test Bus and above major equipment.

p. Phone
   1) Provide two phone lines.

q. Data
   1) Provide minimum 12 LAN drops.

3. Exhaust Requirements:
   a. Provide ventilation for each test stand.
   b. Provide snorkel type spot ventilation for each bench area.
   c. Provide (2) standard fume hoods as listed in the equipment list. Fume hoods must be able to be fitted with HEPA filtration in case of future nano-material use.

4. Gas Monitoring: Provide hydrogen gas monitors and alarms.

5. This lab shall contain both facility power and connections to the Research Electrical Distribution Bus (REDB). The REDB is described in section 5.3.10, D59 and D8 of the program requirements documents. The REDB shall be installed in distributed locations in the lab, or can be integrated into select sub-bay resource drops. The REDB will be controlled from high bay control lab supervisory control and data acquisition (SCADA) system.
   a. Substantiation:
      1) Preliminary Design:
         a) Provide one-line diagrams of all air and hydronic process, utility systems and heat recovery systems.
         b) Provide piping plans that show piping grid, branch take offs and interconnect to other laboratories with all control valves interface to the SCADA system.
         c) Provide SCADA system control schematic and sequence of operation that shows all monitoring and control points for all process utility systems.

C. Health and Safety:

1. Provide (2) flammable storage cabinets and (10) gas storage cabinets. Quantities are anticipated to be less than code maximum allowable quantities.

2. Flammables:
   a. Solvents (liquids)
   b. H_2 (gas)
   c. Methanol

3. Toxics:
   a. Hg (liquid)
   b. Dilute CO (gas)

4. The design builder shall utilize the information given in the performance specifications and program for the types and quantities of hazardous materials located in the laboratory. After contract award, confirm the types and amounts of hazardous materials with the NREL researchers.
   a. Substantiation:
      1) Submit a list of all hazardous materials, as well as quantities, located in laboratory. Provide all necessary building previsions to support the hazardous materials in the lab and facility in general.

D. Substantiation:

1. Provide functional testing of all process utility systems. Provide start-up reports and commissioning of mechanical and electrical utilities and Research equipment.
   a. Provide test and balance report included in the operation and maintenance manual.

END OF SECTION D99A

SECTION D99B
OUTDOOR TEST AREA

PERFORMANCE

A. Basic Function:

1. The basic functions of the Outdoor Test Area is to provide a flexible test environment for outdoor low and medium voltage equipment and to provide the ability to connect outdoor equipment with the Research Electrical Distribution Bus (REDB), the Test Distribution System, and the utility.

2. This section describes performance requirements for the outdoor test pads adjacent to the high bay for outdoor testing of equipment as well as outdoor roof test areas.

3. The information contained herein is intended to compliment the program requirements and laboratory equipment list to identify and elaborate on unique requirements of the laboratory. Refer to other performance specifications and Section D Services for Mechanical, Electrical, Plumbing and Low Voltage system performance requirements.

4. The design builder shall utilize load information provided in the equipment list, program and performance specifications for the response to the RFP. After contract award, the design builder shall determine all mechanical and electrical utility loads for equipment and general use in the laboratory by extracting the load information from the NREL Researchers.

5. Substantiation:
   a. Preliminary Design:
      1) Submit analysis and documentation of all process utility loads. Provide equipment lists summarizing all mechanical and electrical utilities and the associated load, flow rate, voltage, current and utility connections.

B. Amenity and Comfort:

1. Provide the following systems:
   a. Normal power requirements
      (See 5.2.9.2, Figure 3 for diagram of test bus connection)
      1) Provide power as required for equipment.
      2) Provide outlets for laptops and test / calibration equipment. See equipment list.
      3) Provide each research area or test pad with at least have 2 outlets each for 480 Vac (400A), 208 Vac (100A & 200A), 240 Vac (100A & 200A) and 6 outlets of 120Vac.
   b. Fuel
      1) Provide capability to store 500 gal of diesel and 500 gal of bio-diesel. Provide distribution from storage tanks to pads. Tanks are to be located above grade.
      2) Provide small refuel tanker access to diesel pads
      3) Provide natural gas to pads for to fuel up to (4) 250 KW natural gas driven generators.
      4) Provide ½" hydrogen from outdoor storage tank to test pads.
   c. Water
      1) Provide access to city water for outdoor pads on the ground as well as at the roof rest area.
   d. Process cooling water
      1) Provide 4" glycol piping from the research chiller system for connection of ice storage at the pads
   e. Alarms
      1) Provide alarm systems for leak detection for all fuel systems.
   f. Security requirements
      1) Tours are permitted in the area
      2) Provide the ability to restrict access when experiments are being performed
   g. Phone
      1) Provide a phone line for the test pad area.

h. Data
   1) Provide fiber optic communication for real-time monitoring and control.
   2) Provide interconnection with ESIF SCADA system.
   3) Provide a LAN drop at each test pad

i. This lab shall contain both facility power and connections to the Research Electrical Distribution Bus (REDB). The REDB is described in section 5.3.10, D59 and D8 of the program requirements documents. The REDB shall be installed in distributed locations in the lab, or can be integrated into select sub-bay resource drops. The REDB will be controlled from high bay control lab supervisory control and data acquisition (SCADA) system.
   1) Substantiation:
      (a) Preliminary Design:
         (1) Provide SCADA system control schematic and sequence of operation that shows all monitoring and control points for all process utility systems.

         (2) Provide drawings indicating all major equipment in the lab, and how they are anticipated to be fed.

C. Health and Safety:

1. Provide materials that are UL listed where possible
2. Follow applicable guidelines for safe occupancy and operation in the presence of flammable fuels.
3. Provide the ability to safely isolate for test and maintenance.
4. The design builder needs to confirm all chemical hazards and other hazards located in the area with the NREL researchers.
5. Provide earthen berms and security fencing around perimeter of test bed area.
6. Provide emergency power off (EPO) buttons for each test location to shut off power at that location.

D. Structure:

1. The Outdoor Test Bed shall be level with fork lift access.
2. 50% of the area dedicated to building technology should have an unobstructed southern view for solar access.
3. The Test Distribution Yard shall be graded to comply with environmental requirements to capture contamination due to oil spills, etc.

E. Durability:

1. All Distribution Test System equipment shall be utility grade, 15 kV class.

F. Operation and Maintenance:

1. Substantiation:
   a. Provide functional testing of all process utility systems. Provide start-up reports and commissioning of mechanical utilities, fuel systems, controls and data systems.
   b. Provide test and balance report included in the operation and maintenance manual.

END OF SECTION D99B

SECTION D99C
SECURE DATA CENTER

PERFORMANCE

A. Basic Function:

1. The information contained herein is intended to compliment the program requirements and laboratory equipment list to identify and elaborate on unique requirements of the laboratory. Refer to other performance specifications and Section D Services for Mechanical, Electrical, Plumbing and Low Voltage system performance requirements.

2. The design builder shall utilize load information provided in the equipment list, program and performance specifications for the response to the RFP. After contract award, the design builder shall determine all mechanical and electrical utility loads for equipment and general use in the laboratory by extracting the load information from the NREL Researchers.
   a. Substantiation:
      1) Preliminary Design:
         a) Submit analysis and documentation of all process utility loads. Provide equipment lists summarizing all mechanical and electrical utilities and the associated load, flow rate, voltage, current and utility connections.

B. Amenity and Comfort:

1. Server equipment is to be located in the High Performance Computer Data Center (HPCDC). This equipment needs to be physically secured from the remainder of the room but must be open to allow airflow from the HPCDC HVAC system to cool the equipment.

2. Provide the following systems:
   a. Security:
      1) Provide keypad with card access, keyed door lock, card access for egress, motion sensors and tamper switches above ceiling and below floor, and silent and audible alarms.
   b. Data:
      1) Provide eight LAN drops directly to the Secure Conference Room. Terminate LAN drops in lockable enclosures in the Secure Conference Room.
      2) Provide minimum eight LAN drops directly to the Secure Work Station Area.

C. Operation and Maintenance:

1. Substantiation:
   a. Provide functional testing and commissioning reports for the data equipment and the performance of the HVAC and electrical system.
      1) Provide test and balance report included in the operation and maintenance manual.

END OF SECTION D99C

SECTION D99D
EDUCATION MULTI-MEDIA LAB & SECURE CONFERENCE ROOM

PERFORMANCE

A. Basic Function:

1. The information contained herein is intended to compliment the program requirements and laboratory equipment list to identify and elaborate on unique requirements of the laboratory. Refer to other performance specifications and Section D Services for Mechanical, Electrical, Plumbing and Low Voltage system performance requirements.

2. The design builder shall utilize load information provided in the equipment list, program and performance specifications for the response to the RFP. After contract award, the design builder shall determine all mechanical and electrical utility loads for equipment and general use in the laboratory by extracting the load information from the NREL Researchers.
    a. Substantiation:
        1) Preliminary Design:
            a) Submit analysis and documentation of all process utility loads. Provide equipment lists summarizing all mechanical and electrical utilities and the associated load, flow rate, voltage, current and utility connections.

B. Operation and Maintenance:

1. Provide dimmable lighting with the ability to turn off the lighting near the screen for presentations.

2. Substantiation:
    a. Provide functional testing of building HVAC, electrical and IT.
        1) Provide test and balance report included in the operation and maintenance manual.

END OF SECTION D99D

SECTION D99E
HIGH PERFORMANCE COMPUTING DATA CENTER (HPCDC)

PERFORMANCE

A. Basic Function: Support the following function:

1. Provide for the ability for growth and rolling Data Processing equipment replacement.

2. The information contained herein is intended to compliment the program requirements and laboratory equipment list to identify and elaborate on unique requirements of the laboratory. Refer to other performance specifications and Section D Services for Mechanical, Electrical, Plumbing and Low Voltage system performance requirements.

3. The design builder shall utilize load information provided in the equipment list, program and performance specifications for the response to the RFP. After contract award, the design builder shall determine all mechanical and electrical utility loads for equipment and general use by extracting the load information from the NREL Researchers.
   a. Substantiation:
      1) Preliminary Design:
         a) Submit analysis and documentation of all process utility loads. Provide equipment lists summarizing all mechanical and electrical utilities and the associated load, flow rate, voltage, current and utility connections.

B. Amenity and Comfort:

1. Environment:
   a. This space is to be operated "dark" at most times. The environment shall be designed to meet the requirements of the equipment. Meeting the requirements of personnel is secondary.
   b. Temperature/Humidity: Environmental conditions shall meet the recommended range 98% of the time and within the allowable range 100% of time as defined in the Thermal Guidelines for Data Processing Environments, ASHRAE Datacom Series, published by ASHRAE TC 9.9 Mission Critical Facilities, Technology Spaces and Electronic Equipment, 2004 with 2008 amendments.
   c. Provide a system to recover the waste heat from the HPCDC to be used to heat this building and export to the campus waste heat loop.
   d. Light levels:
      1) Provide 75 footcandles average on the work surfaces, only for an area of 150 square feet surrounding a person working on the Data Processing equipment. Provide occupancy sensors or other controls to accomplish this automatically.

2. Provide the following systems:
   a. For chilled water supplied at 75 deg F, 70% of the HPCDC equipment heat release is to the water, 30% to the air. For chilled water supplied at 60 deg F, 95% of the HPCDC equipment release is to the water, 5% to the air.
   b. The temperature rise across the HPCDC equipment is expected to be 25 deg F or less regardless of chill water supply temperature changes. The water pressure drop through the HPCDC equipment is expected to be 25 psig or less.
   c. Normal power requirements
      1) Provide 480v 3 phase normal power infrastructure including conduit raceways for an ultimate build out of 10 MW. Provide 480v, 3 phase distribution to Data Processing equipment for 2.5 MW initial build-out.
      2) Provide metering to indicate the power consumed by the data racks. Provide the capability of metering each rack separately. Provide metering to indicate power consumed by the building systems supporting the computer equipment. Metering shall also be provided for the head recorded from the data racks and beneficially exported to other parts of the building or campus. A front and monitoring system with dashboard display shall be provided

to show Energy Utilization Effectiveness (EUE).

3) All computer Power Distribution Units (PDUs) or panel boards shall be located outside of the HPCDC.
4) Provide power to data center equipment from above racks. Piping shall be run below the racks.

d. Backup power requirements
   1) Provide backup power and UPS power to 10% of the connected load, with a 10 minute rating.

e. Special Fire Alarm
   1) Coordinate fire alarm system with any underfloor air distribution and high air change rate air distribution systems.
   2) Provide pre-action system in data center computer area.

f. Other Alarms
   1) Provide connectivity between Data Equipment temperature sensors and alarms to the Building Automation System.
   2) Provide a "dashboard" graphical user interface available at any user enabled display showing real-time and trended data from critical control points. This includes energy usage, space temperature, water flow rates, and temperatures, etc.

g. Security requirements
   1) Card Reader at each entry.

h. Overhead Cable tray
   1) Provide ladder rack and FiberGuide for cables to route into equipment racks from overhead.

i. Phone
   1) Refer to guidelines in D7 and D71

j. Data
   1) Refer to guidelines in D7 and D71

C. Operation and Maintenance

1. Substantiation
   a. Provide functional testing of all laboratory equipment and process utility systems. Provide start-up reports and commissioning of systems including point-to-point testing of the controls.
   b. Provide test and balance report included in the operation and maintenance manual.

METHODS OF CONSTRUCTION

A. The construction will use one of the following methods:

1. Heat Recovery systems to transfer heat energy meet the ventilation heating requirements, to other parts of the facility.

2. All cooling equipment and components (air handling units, cooling towers, pumps, valves, control panels) shall be provided with N+1 redundancy. Distribution pathways (duct and pipe) are not required to be redundant, and may be headered together.

3. Electrical distribution shall provide at least two independent pathways back to the site utility distribution. The pathways are not required to be redundant to each other, but a single point of failure "downstream" of the connection to the site utility distribution system shall not affect more than 50% of the HPCDC power distribution system. The distribution pathways shall be capable of being cross connected, but this cross connection may be manual.

4. Minimum MERV 8 filtration.

5. Data Center utilities shall be independent from all other building utilities. This includes electrical service entrances, air handling systems, and process cooling water connections.

6. The annualized Energy Utilization Effectiveness (EUE) shall be 0.90 or less. EUE is defined as:
   a. (Total Data Center Facility Annual Energy - Total Annual Energy Recovered and Beneficially Used

Outside the Data Center) / (Total IT Equipment Annual Energy)

B. The construction will not use:

1. Vapor Compression based cooling, except for heat pump based heat recovery systems where rejected heat is beneficially used.
2. Campus heating and cooling utilities.
3. Natural Gas

END OF SECTION D99E

SECTION D99F
APPLIED BATTERY AND ELECTROMATICS LABORATORY

PERFORMANCE

A. Basic Function:

1. The information contained herein is intended to compliment the program requirements and laboratory equipment list to identify and elaborate on unique requirements of the laboratory. Refer to other performance specifications and Section D Services for Mechanical, Electrical, Plumbing and Low Voltage system performance requirements.

2. The design builder shall utilize load information provided in the equipment list, program and performance specifications for the response to the RFP. After contract award, the design builder shall determine all mechanical and electrical utility loads for equipment and general use in the laboratory by extracting the load information from the NREL Researchers.
   a. Substantiation:
      1) Preliminary Design:
         a) Submit analysis and documentation of all process utility loads. Provide equipment lists summarizing all mechanical and electrical utilities and the associated load, flow rate, voltage, current and utility connections

B. Amenity and Comfort:

1. Environment:
   a. Temperature/Humidity:
      1) Maintain within standard range identified in Facility Performance Section III.
      2) Light levels:
         a) Provide 20 footcandles average in the space.
         b) Provide 50 footcandles average on the work surfaces.

C. Operation and Maintenance:

1. Provide the following systems:
   a. HEPA filtration on the fume hood exhaust.
   b. Utilities for all glove boxes, ovens, vacuum chambers and other lab equipment. This includes exhaust, lab gases, compressed air, DI water, vacuum lines. Flow rates and pressures will need to be confirmed after contract award. Provide ¾" compressed air evenly distributed throughout the lab with (6) valved connections.
   c. Bottled lab gases consisting of Argon, Oxygen and forming gas (H_2 and Nitrogen Mixture) in the service corridor.

2. Provide the following systems:
   a. Local ventilation at each bench consisting of 6" drops with a seal-tight balancing damper
   b. Overhead system of ¾" house DI water evenly distributed throughout the laboratory with (6) valved drops.
   c. Provide 6-gas cylinders in service corridor for oxygen and forming gas. Provide ¼" distribution piping.
   d. 1" Nitrogen evenly distributed throughout the laboratory with (6) valved drops.
   e. Process Cooling Water for glove boxes and (2) spare valved connections
   f. Ventilation for glove boxes and ovens (up to 1200 degrees F), vacuum chambers and fume hoods.
   g. Normal power requirements
      1) Provide wiremold with 120v outlets at 24" minimum spacing on walls with casework and above equipment.
      2) Provide emergency 120v outlets at 5' spacing minimum.
      3) Provide 208v 30a outlets at 5' spacing minimum.
      4) Provide additional power as required for equipment. See equipment lists.

h. Other Alarms
   1) Provide gas monitor alarms as needed.
i. Security requirements
   1) No Special Security Requirements.
j. Overhead Cable tray
   1) Provide Overhead Cable Tray along Test Bus and above major equipment.
k. Phone
   1) Provide three phone lines.
l. Data
   1) Provide minimum 24 LAN drops.
m. Provide compressed air connections at all equipment requiring compressed air plus six additional drops spaced evenly throughout the lab. Provide 100 psi at all locations.

D. Health and Safety:

1. Provide (5) fume hoods and HEPA filtration on the fume hood exhaust.
2. Provide (4) corrosive storage, (2) flammable storage, and (1) gas storage cabinet.
3. Hazards include use of hydrogen, lithium, lab scale chemicals, and lab scape use of toxic gases.
4. The design builder shall utilize the information given in the performance specifications and program for the types and quantities of hazardous materials located in the laboratory. After contract award, confirm the types and amounts of hazardous materials with the NREL researchers.
   a. Substantiation:
      1) Submit a list of all hazardous materials, as well as quantities, located in the laboratory. Provide all necessary building previsions to support the hazardous materials in the lab and facility in general. Hazards include: Hydrogen, Lithium, lab-scale chemical use, lab scale use of toxic waste.

E. Operation and Maintenance:

1. Substantiation:
   a. Provide functional testing of all process utility systems. Provide start-up reports and commissioning of mechanical utilities, electrical and research equipment.
   b. Provide test and balance report included in the operation and maintenance manual.

END OF SECTION D99F

SECTION D99G
HIGH BAY MAIN LABORATORY

PERFORMANCE

A. Basic Function:

1. The information contained herein is intended to compliment the program requirements and laboratory equipment list to identify and elaborate on unique requirements of the laboratory. Refer to other performance specifications and Section D Services for Mechanical, Electrical, Plumbing and Low Voltage system performance requirements.

2. The design builder shall utilize load information provided in the equipment list, program and performance specifications for the response to the RFP. After contract award, the design builder shall determine all mechanical and electrical utility loads for equipment and general use in the laboratory by extracting the load information from the NREL Researchers.
   a. Substantiation:
      1) Preliminary Design:
         a) Submit analysis and documentation of all process utility loads. Provide equipment lists summarizing all mechanical and electrical utilities and the associated load, flow rate, voltage, current and utility connections.
         b) Provide one-line diagrams of all air and hydronic process, utility systems and heat recovery systems.
         c) Provide piping plans that show piping grid, branch take offs and interconnect to other laboratories with all control valves interface to the SCADA system.
         d) Provide SCADA system control schematic and sequence of operation that shows all monitoring and control points for all process utility systems.

B. Amenity and Comfort:

1. Environment:
   a. Temperature/Humidity:
      1) Maintain within standard range identified in Facility Performance Section III. Temperature does not need to be maintained within the generator test area when the generator is in operation. Make provisions for freeze protection of fire protection system and other plumbing or hydronic systems.
      2) Provide HVAC capacity for heat and exhaust rejection for a 1 MW diesel engine.
      3) Provide heat rejection for 1MW grid simulator at max load 20KBTU/hr x 20units.
      4) The building HVAC system shall provide the necessary heating, cooling and general ventilation for normal laboratory functions. Provide control through the building DDC system. Special process utilities such as Research Utilities, process exhaust, outside air pre-conditioning systems and relief air systems shall be controlled through the SCADA control system.

2. Mechanical and Electrical Utilities:
   a. This lab will require both facility power and connections to the Research Electrical Distribution Bus (REDB). The REDB is described in section 5.3.10, D59, and D8 of the program requirements documents. The REDB shall be installed in distributed locations in the lab, or can be integrated into select sub-bay resource drops. The REDB will be controlled from high bay control lab supervisory control and data acquisition (SCADA) system.
   b. The lab shall have research bus (REDB) connections.
   c. Provide research chilled water, research heating water and research fuels (hydrogen and natural gas) piping loops in an accessible overhead service corridor or interstitial space to provide a mechanical system with multiple valved piping take-offs to allow for connection of experiments within the laboratory. Diesel and bio-diesel will be routed only to equipment that will use this service.

d. Provide twelve piping take offs for each system uniformly distributed throughout the laboratory. Piping take offs shall be provided with isolation valves, control valves, temperature sensors and flow meters with interface to SCADA system.
e. The research chilled water loop shall include 4" mains with 1-1/2" branch take offs. The research heating water loop shall include 2" mains with 1" branch take offs. The research fuels will consist of 2" hydrogen mains and branch take offs.
f. The mechanical process utilities shall interface to the building condenser water process cooling loop the waste heat loop, Campus chilled water loop, Campus heating water loop, research low temperature chiller, research boiler by means of automatic control valves controlled by the SCADA system.
g. The mechanical utilities within this laboratory will be closely related to the Power Electronics Laboratory, Smart Grid Lab and the Energy Storage Laboratory. The SCADA front end controls and monitoring will be located in the High Bay Control Room. Refer to section D8 Process Utilities for additional information.
h. Provide process exhaust distribution consisting of a minimum of (6) process exhaust drops uniformly distributed from the overhead utility grid. Confirm exhaust temperature requirements after contract award.
i. Provide high temperature snorkel type exhaust system, make-up air, radiator exhaust and diesel fuel piping and accessories for connection of a 1MW air-cooled diesel generator running inside the High Bay.
j. Provide filtered outside air connection and relief air connection (sized for six air changes per hour) to the drive-in environmental chamber. This is to allow for conditioning the chamber with outside air if the temperatures are acceptable for the experiment. Provide 2 inch research chilled water; 2 inch research heating water and vehicle exhaust connections into the environmental chamber with isolation valves and dampers.
k. Light levels:
    1) Provide 20 footcandles average in the space.
    2) Provide 50 footcandles average on the work surfaces.
l. Normal power requirements
    1) Provide convenience outlets at 10' minimum spacing on walls
    2) Provide power as required for equipment in the equipment list and as follows:
        a) Environmental Test Chamber Support
        b) Large wind Turbine Simulator (500kW)
        c) Small Wind Turbine Simulator (1-250kw)
        d) DC PV Simulator
        e) Utility Grid Simulator
        f) 200 kW RLC AC load bank (water cooled)
        g) High Current DC Source
        h) Distribution System Line Length Simulator
        i) Residential MELs /ZEB (Zero Energy Building) test bed
        j) Commercial ZEB test bed
        k) Overhead gantry crane
        l) Flammable storage and Corrosive Storage cabinets.
        m) Provide two 208 volt single phase outlets (30 amp)
        n) Provide 480 volt three phase power to the Environmental Test Chamber
        o) Provide surface raceway above the counter with outlets 24" OC.
m. Backup power requirements
    1) Provide UPS power with normal power at computer locations.
n. Special Fire Alarm
    1) No Special Fire Alarm Requirements.
o. Other Alarms
    1) Provide audible and visual alarms for all research fuel systems.

p. Security requirements
   1) No Special Security Requirements.
q. Overhead Cable tray
   1) Provide Overhead Cable Tray along Test Bus and above major equipment.
r. Phone
   1) Provide three phone lines.
s. Data
   1) Provide minimum 24 LAN drops
t. Provide compressed air connections at all equipment requiring compressed air plus six additional drops spaced evenly throughout the lab. Provide 100 psi at all locations.

C. Health and Safety:

1. Provide ventilation, combustion air and high temperature snorkel exhaust system for temporary operation of a 1 MW air cooled diesel generator within the high bay.
2. Provide (6) snorkel type spot ventilation locations distributed throughout the high-bay.
3. Provide ventilated storage cabinets and gas cabinets.
4. Provide gas monitoring for hydrogen fuels.
5. Provide automatic and manual fuel shut-off valves for all Research Fuel Systems.
6. Provide acoustic separation between indoor generator test space and remainder of high bay. Provide acoustic separation between motor dynamometer and the remainder of the high bay.
7. Provide leak detection alarming and shut-off valves for all hydronic and fuel systems.
8. Provide (1) corrosive cabinet, (1) flammable cabinet and (1) gas cabinet. Quantities are anticipated to be less than code maximum allowable quantities.
9. The design builder shall utilize the information given in the performance specifications and program for the types and quantities of hazardous materials located in the laboratory. After contract award, confirm the types and amounts of hazardous materials with the NREL researchers.
   a. Substantiation:
      1) Submit a list of all hazardous materials, as well as quantities, located in the laboratory. Provide all necessary building previsions to support the hazardous materials in the lab and facility in general.

D. Structure:

1. Provide interstitial space or catwalk system or other means to allow researchers convenient connection of experiments to the process utility grid system.
2. Provide suitable research and test equipment mounting. Generally, large equipments will sit on the floor. Some equipment will need to be mounted to the wall. Walls shall be compatible with loading from electronics or other types of research enclosures via uni-strut or other universal framing methods.
3. The lab floor needs to withstand heavy equipment; may require additional reinforcing/thickness or a structural slab.

E. Durability:

1. Provide all necessary thermal expansion loops, anchors, guides and systems to accommodate the thermal expansion of the piping systems over the expected temperature ranges.
2. Provide insulation on all hydronic piping systems in accordance with their temperature ranges. Provide vapor barrier on cold piping to prevent condensation.

F. Operation and Maintenance:

1. Arrange bus drops to allow convenient access for researchers to connect to the Research Electrical Distribution Bus (REDB) for experiments. Allow for adequate access for installing future drops and future connections.

2. Arrange piping to allow convenient access for researchers to connect to the utility grid for experiments to be located throughout the highbay. Allow for adequate access for installing future piping and future connections.

3. Provide a high level of monitoring of both the process utility loops and the building system loops such that the researchers can identify the most energy efficient means for heat rejection and cooling needs on the research loops. This monitoring shall interface to the SCADA control system. The SCADA front end control and monitoring will be located in the High Bay Control Room.

4. Substantiation:
   a. Provide functional testing of all process utility systems. Provide start-up reports and commissioning of research chilled water and research heating water loops and point-to-point testing of the entire SCADA control system and monitoring for mechanical utilities.
   b. Provide test and balance report included in the operation and maintenance manual.

END OF SECTION D99G

SECTION D99H
COMMERCIAL BUILDING HIGH BAY LABORATORY

PERFORMANCE

A. Basic Function:

1. Testing interactions and compatibility of building controls, energy production, energy storage, HVAC, lighting, and daylighting systems.

2. The information contained herein is intended to compliment the program requirements and laboratory equipment list to identify and elaborate on unique requirements of the laboratory. Refer to other performance specifications and Section D Services for Mechanical, Electrical, Plumbing and Low Voltage system performance requirements.

3. The design builder shall utilize load information provided in the equipment list, program and performance specifications for the response to the RFP. After contract award, the design builder shall determine all mechanical and electrical utility loads for equipment and general use in the laboratory by extracting the load information from the NREL Researchers.
   a. Substantiation:
      1) Preliminary Design:
         a) Submit analysis and documentation of all process utility loads. Provide equipment lists summarizing all mechanical and electrical utilities and the associated load, flow rate, voltage, current and utility connections.

B. Amenity and Comfort:

1. Mechanical and Electrical Utilities:
   a. This lab will need both facility power and connections to the Research Electrical Distribution Bus (REDB). The REDB is described in the performance specifications and the program requirements documents. The REDB shall be installed in distributed locations in the lab, or can be integrated into select sub-bay resource drops. The REDB will be controlled from high bay control lab supervisory control and data acquisition (SCADA) system.
   b. Provide research chilled water, research heating water and research fuels (hydrogen and natural gas) piping loops in an accessible overhead service corridor or interstitial space to provide a mechanical system with multiple valved piping take-offs to allow for connection of experiments within the laboratory
   c. Provide twelve piping take offs for each system uniformly distributed throughout the laboratory. Piping take offs shall be provided with isolation valves, control valves, temperature sensors and flow meters with interface to SCADA system.
   d. The research chilled water loop shall include 4" mains with 1-1/2" branch take offs. The research heating water loop shall include 2" mains with 1" branch take offs. The research fuels will consist of 2" hydrogen mains and branch take offs; and ¾" natural gas distribution.
   e. The mechanical process utilities shall interface to the building condenser water process cooling loop the waste heat loop, Campus chilled water loop, Campus heating water loop, research low temperature chiller, research boiler by means of automatic control valves controlled by the SCADA system.
   f. Provide process exhaust distribution consisting of a minimum of (6) process exhaust drops uniformly distributed from the overhead utility grid. Confirm exhaust temperature requirements after contract award.
   g. Provide 4" process cooling water from the building condenser water system for use in the high bay and for connection to outdoor test beds. Provide valves and caps at exterior wall. Confirm loads and pipe size after contract award.
   h. Provide 4" research chilled water connection to the outdoor test beds for testing of ice storage system.
   i. Provide ducted openings for outside air intake and exhaust air for temporary connections of

commercial air handling equipment. Allow for 10,000 cfm. Confirm loads and duct allowance with NREL after contract award.

j. Provide domestic cold water and plumbing to sinks, eyewash and emergency shower.

k. Provide compressed air connections at all equipment requiring compressed air plus six additional drops spaced evenly throughout the lab. Provide 100 psi at all locations.

2. Substantiation:
   a. Preliminary Design:
      1) Provide one-line diagrams of all air and hydronic process, utility systems and heat recovery systems.
      2) Provide piping plans that show piping grid, branch take offs and interconnect to other laboratories with all control valves interface to the SCADA system.
      3) Provide SCADA system control schematic and sequence of operation that shows all monitoring and control points for all process utility systems.

3. Provide the following systems:
   a. 208v, 200a building power, capable of fusing to lower amperages.
   b. 480v, 300a building power disconnect, capable of fusing to lower amperages

4. Light levels:
   a. Provide 20 footcandles average in the interior spaces.
   b. Provide 50 footcandles average on the interior work surfaces.
   c. Provide exterior lighting at an average of 20 footcandles at the work areas.

5. Security requirements
   a. No Special Security Requirements.

6. Overhead Cable tray
   a. Provide Overhead Cable Tray along Test Bus and above major equipment.

7. Phone
   a. Provide three phone lines.

8. Data
   a. Provide minimum 24 LAN drops

C. Health and Safety:

1. Provide emergency eyewash and emergency shower.

2. Provide gas monitoring for hydrogen fuels.

3. Provide automatic and manual fuel shut-off valves for all Research Fuel Systems.

4. Provide leak detection and shut-off valves for all hydronic and fuel systems.

5. Provide (1) flammable storage cabinet. Quantities are anticipated to be less than code maximum allowable quantities.

6. The design builder shall utilize the information given in the performance specifications and program for the types and quantities of hazardous materials located in the laboratory. After contract award, confirm the types and amounts of hazardous materials with the NREL researchers.
   a. Substantiation:
      1) Submit a list of all hazardous materials, as well as quantities, located in the laboratory. Provide all necessary building previsions to support the hazardous materials in the lab and facility in general.

D. Structure:

1. Provide interstitial space or catwalk system or other means to allow researchers convenient connection

of experiments to the process utility grid system.

2. Provide suitable research and test equipment mounting. Generally, large equipments will sit on the floor. Some equipment will need to be mounted to the wall. Walls shall be compatible with loading for attachment of equipment

E. Durability:

1. Provide all necessary thermal expansion loops, anchors, guides and systems to accommodate the thermal expansion of the piping systems over the expected temperature ranges.

2. Provide insulation on all hydronic piping systems in accordance with their temperature ranges. Provide vapor barrier on cold piping to prevent condensation.

F. Operation and Maintenance:

1. Arrange bus drops to allow convenient access for researchers to connect to the Research Electrical Distribution Bus (REDB) for experiments. Allow for adequate access for installing future drops and future connections.

2. Arrange piping to allow convenient access for researchers to connect to the utility grid for experiments. Allow for adequate access for installing future piping and future connections.

3. Provide a high level of monitoring of both the process utility loops and the building system loops such that the researchers can identify the most energy efficient means for heat rejection and cooling needs on the research loops. This monitoring shall interface to the SCADA control system. The SCADA front end control and monitoring will be located in the High Bay Control Room.

4. Substantiation:
   a. Provide functional testing of all process utility systems. Provide start-up reports and commissioning of research chilled water and research heating water loops and point-to-point testing of the entire SCADA control system and monitoring for mechanical utilities.
   b. Provide test and balance report included in the operation and maintenance manual.

END OF SECTION D99H

SECTION D99I
VSHOT HIGH BAY LABORATORY

PERFORMANCE

A. Basic Function:

1. The information contained herein is intended to compliment the program requirements and laboratory equipment list to identify and elaborate on unique requirements of the laboratory. Refer to other performance specifications and Section D Services for Mechanical, Electrical, Plumbing and Low Voltage system performance requirements.

2. The design builder shall utilize load information provided in the equipment list, program and performance specifications for the response to the RFP. After contract award, the design builder shall determine all mechanical and electrical utility loads for equipment and general use in the laboratory by extracting the load information from the NREL Researchers.
   a. Substantiation:
      1) Preliminary Design:
         a) Submit analysis and documentation of all process utility loads. Provide equipment lists summarizing all mechanical and electrical utilities and the associated load, flow rate, voltage, current and utility connections.

B. Amenity and Comfort:

1. Provide the following systems:
   a. Provide mechanical utilities for Thermal Cycling Chamber (DI water and drain).
   b. De-ionized Water near sink for cleaning process.
   c. Normal power requirements
      1) Provide convenience outlets at 10' minimum spacing on walls
      2) Provide two, 208 volt single phase outlets (30 amp)
      3) Provide 480 volt three phase power to the Environmental Test Chamber
      4) Provide surface raceway above the counter with outlets 24" OC.
      5) Provide power to all equipment indicated in equipment list.
   d. Backup power requirements
      1) Provide UPS power with normal power at computer locations.
   e. Special Fire Alarm
      1) No Special Fire Alarm Requirements.
   f. Other Alarms
      1) No other alarms required.
   g. Security requirements
      1) No Special Security Requirements.
   h. Overhead Cable tray
      1) Provide Overhead Cable Tray above major equipment.
   i. Phone
      1) Provide three phone lines.
   j. Data
      1) Provide minimum six LAN drops.
   k. Provide compressed air connections at all equipment requiring compressed air plus six additional drops spaced evenly throughout the lab. Provide 100 psi at all locations.

2. Light levels:
   a. Provide 20 footcandles average in the space.
   b. Provide footcandles average on the work surfaces.
   c. Provide emergency egress lighting per IBC.
   d. Provide total blackout capability - no natural daylight. Provide lighting controls to include

dimming and individual on/off control).

C. Health and Safety:

1. No special ventilation required.

D. Operation and Maintenance:

1. Substantiation:
   a. Provide functional testing of all laboratory equipment and process utility systems. Provide start-up reports and commissioning of systems including point-to-point testing of the controls.
   b. Provide test and balance report included in the operation and maintenance manual.

END OF SECTION D99I

SECTION D99J
HIGH BAY CONTROL ROOM

PERFORMANCE

A. Basic Function:

1. The High Bay Control Room will be the central monitoring location of the Supervisory Control and Data Acquisition (SCADA) control and monitoring system. This system will have interface to several laboratories and will control and monitor the research bus (REDB) system and the Research mechanical utility systems.

2. The information contained herein is intended to compliment the program requirements and laboratory equipment list to identify and elaborate on unique requirements of the laboratory. Refer to other performance specifications and Section D Services for Mechanical, Electrical, Plumbing and Low Voltage system performance requirements.

3. The design builder shall utilize load information provided in the equipment list, program and performance specifications for the response to the RFP. After contract award, the design builder shall determine all mechanical and electrical utility loads for equipment and general use in the laboratory by extracting the load information from the NREL Researchers.
   a. Substantiation:
      1) Preliminary Design:
         a) Submit analysis and documentation of all process utility loads. Provide equipment lists summarizing all mechanical and electrical utilities and the associated load, heat release, voltage, current and utility connections.

B. Amenity and Comfort:

1. SCADA System:
   a. Provide a centralized SCADA system. The system shall be located in the Highbay- Control room. This location would allow for switching of each controllable piece of the REDB and provide supervisory data acquisition from nodes on the REDB.
   b. The system shall be used to control, monitor and collect data for all research utilities including the REDB, research chilled water and research heating water and interconnection controls to the process utility systems.
   c. Provide display at each laboratory of current operating status
   d. Refer to section D8 Utilities for more information and requirements.

2. Substantiation:
   a. Preliminary Design:
      1) Submit preliminary control schematics of the SCADA system showing all systems to be controlled and monitored. Include details of the graphic dashboard monitoring stations.

3. Light levels:
   a. Provide 20 footcandles average in the space.
   b. Provide 50 footcandles average on the work surfaces.

4. Normal power requirements
   a. Provide power as required for equipment.
   b. Provide two 208 volt single phase convenience outlets (30 amp)
   c. Provide surface wiremold above the counter with outlets 24" OC.

5. Backup power requirements
   a. Provide UPS power with normal power at computer locations.

6. Special Fire Alarm
   a. No Special Fire Alarm Requirements.

7. Other Alarms
   a. No other alarms required.
8. Security requirements
   a. No Special Security Requirements.
9. Overhead Cable tray
   a. Provide Overhead Cable Tray along Test Bus and above major equipment.
10. Phone
    a. Provide three phone lines.
11. Data
    a. Provide minimum 24 LAN drops.
12. The control room shall be served by a separate air handing unit or other suitable means to positively pressurize the control room to + 0.05 inches W.C relative to adjacent high bay labs to prevent fuel gases, vapors, exhaust and dust from entering the control room.

C. Durability:

1. System components, devices and software shall be provided to achieve a service life of a minimum of 10 years.

D. Operation and Maintenance:

1. Substantiation:
   a. Provide functional testing of all systems. Provide start-up reports and commissioning and point-to-point testing of the entire SCADA control system and monitoring for research bus and mechanical utilities.
   b. Provide test and balance report included in the operation and maintenance manual.

END OF SECTION D99J

SECTION D99K
HIGH VOLTAGE/HIGH CURRENT LABORATORY

PERFORMANCE

A. Basic Function: Support interconnection system testing.

1. Support interconnection system testing.

2. The information contained herein is intended to compliment the program requirements of the laboratory. Refer to other performance specifications and section D services for mechanical, electrical, plumbing and low voltage system performance requirements.

3. The design builder shall utilize load information provided in the equipment list, program, and performance specifications for the response to the RFP. After contract award, the design builder shall determine all mechanical and electrical utility loads for equpmnt and general use in laboratory by extracting the load information from the NREL Researchers.
   a. Substantiation:
      1) Preliminary Design:
         a) Submit analysis and documentation of all process utility loads. Provide equipment lists summarizing all mechanical and electrical utilities and the associated load, heat release, voltage, current and utility connections.

B. Amenity and Comfort:

1. Environment.
   a. Light levels:
      1) Provide 30 foot-candles average in the space during working hours.
      2) Lighting fixtures shall be Class 1 Div 2 or equivalent.

C. Health and Safety:

1. Fire extinguisher

2. Electrical equipment and enclosures rated Class1 Div 2 or equivalent.

D. Structure:

1. Concrete floor, walls and ceiling-minimum four inch thickness recommended.

E. Durability: Explosion proof.

F. Operation and Maintenance:

1. Provide the following systems:
   a. Normal power requirements
      1) Provide 120 VAC outlets at 10' minimum spacing on walls
      2) Provide power as required for equipment.
      3) 300 kVA Isolation transformer for 480 VAC service.
      4) 480 VAC 30 kVA isolation transformer for ECAT instrument.
   b. Backup power requirements
      1) Backup power not required.
   c. Special Fire Alarm
      1) No Special Fire Alarm Requirements.
   d. Other Alarms
      1) Audible siren(s) installed outside of lab.
   e. Security requirements
      1) Lockable access door
   f. Overhead Cable tray

1) Provide Overhead Cable Tray along Test Bus and above major equipment.

g. Phone

1) Provide one phone line.

PRODUCTS

METHODS OF CONSTRUCTION

A. The construction will use one of the following methods: Concrete or other non-flammable material.

B. The construction will not use: Any flammable material (e.g. wood, plastic, vinyl or cloth).

C. Wood countertops in selected areas are acceptable.

END OF SECTION D99K

SECTION D99L
POWER ELECTRONICS LABORATORY

PERFORMANCE

A. Basic Function:

1. The lab must have five separate operational areas: 3 power electronics (PE) work bench areas, one hardware-in-loop (HIL) area and one equipment development area. An additional equipments area is to be used for putting various devices such as grid simulators, DC power supplies, AC and DC load banks, configurable L-C filters, and isolation transformers. (refer to the concept floor plan in the programming requirements document).

2. There will be a 110cf environmental chamber and 90 sf walk-in fume hood inside the lab. They may go inside one of the PE work bench areas to save space.

3. The information contained herein is intended to compliment the program requirements and laboratory equipment list to identify and elaborate on unique requirements of the laboratory. Refer to other performance specifications and Section D Services for Mechanical, Electrical, Plumbing and Low Voltage system performance requirements.

4. The design builder shall utilize load information provided in the equipment list, program and performance specifications for the response to the RFP. After contract award, the design builder shall determine all mechanical and electrical utility loads for equipment and general use in the laboratory by extracting the load information from the NREL Researchers.
   a. Substantiation:
      1) Preliminary Design:
         a) Submit analysis and documentation of all process utility loads. Provide equipment lists summarizing all mechanical and electrical utilities and the associated load, flow rate, voltage, current and utility connections.

B. Amenity and Comfort:

1. Mechanical and Electrical Utilities:
   a. This lab shall contain both facility power and connections to the Research Electrical Distribution Bus (REDB). The REDB is described in section 5.3.10, D59 and D8 of the program requirements documents. The REDB shall be installed in distributed locations in the lab, or can be integrated into select sub-bay resource drops. The REDB will be controlled from high bay control lab supervisory control and data acquisition (SCADA) system.
   b. The lab shall have research bus (REDB) connections.
   c. Provide research chilled water, research heating water and research fuels (hydrogen), piping loops in an accessible overhead service corridor or interstitial space to provide a mechanical system with multiple valved piping take offs to allow for connection of experiments within the laboratory.
   d. Provide twelve piping take offs for each system uniformly distributed throughout the laboratory. Piping take offs shall be provided with isolation valves, control valves, temperature sensors and flow meters with interface to SCADA system.
   e. The research chilled water loop shall include 4" mains with 1-1/2" branch take offs. The research heating water loop shall include 2" mains with 1" branch take offs. The research fuels will consist of 2" hydrogen mains and branch take offs.
   f. The mechanical process utilities shall interface to the building condenser water process cooling loop the waste heat loop, Campus chilled water loop, Campus heating water loop, research low temperature chiller, research boiler by means of automatic control valves controlled by the SCADA system.
   g. The mechanical utilities within this laboratory will be closely related to the High Bay Laboratory and the Energy Storage Laboratory. The SCADA front end controls and monitoring will be located in the High Bay control room. Refer to section D8 Process Utilities for additional information.

h. Provide process exhaust distribution consisting of (12) process exhaust drops uniformly distributed from the overhead utility grid.
i. Provide snorkel type exhausts on PE work benches, equipment development area and equipments area. Exhaust drops shall be equipped with seal-tight balancing dampers for connection of local snorkel exhaust.
j. The descriptions of the different laboratory functional areas are given in the corresponding section of the program requirements document. The electrical, cooling, gas and mechanical resources at these functional areas shall satisfy the requirements described in that section.
k. The requirements for the main entry to the lab and for each of the operational areas are detailed in the program requirements document.
l. Provide compressed air connections at all equipment requiring compressed air plus six additional drop spaced evenly throughout the lab. Provide 100 psi at all locations.
m. Substantiation:
    1) Preliminary Design:
        a) Provide one-line diagrams of all air and hydronic process, utility systems and heat recovery systems.
        b) Provide piping plans that show piping grid, branch take offs and interconnect to other laboratories with all control valves interface to the SCADA system.
        c) Provide SCADA system control schematic and sequence of operation that shows all monitoring and control points for all process utility systems.
n. Normal power requirements:
    1) Provide convenience outlets at 10' minimum spacing on walls
    2) Provide power as required for equipment.
    3) Provide each research area with at least have 2 outlets each for 480 Vac, 208 Vac, 240 Vac and 6 outlets of 120Vac
o. Provide power as required for equipments:
    1) 250 kW DC source
    2) 50 kW utility grid simulator
    3) At least 200 kW for AC-DC converter
    4) At least 200 kW of other research and test equipments
    5) Provide mechanical and electrical utilities for 110cf environmental test chamber
    6) Provide walk-in fume hood support (96 sq. ft. fume hood)
    7) Flammable storage and Corrosive Storage cabinets.
    8) Provide 480 volt three phase power to the Environmental Test Chamber
    9) Provide surface raceway above the counter with outlets 24" OC.
p. Backup power requirements:
    1) Provide UPS power with normal power at computer locations.
q. Special Fire Alarm:
    1) No special fire alarm Requirements.
r. Other Alarms:
    1) Provide audible and visual alarms for all gas monitoring and hydrogen monitoring systems.
s. Special security requirements:
    1) No special security requirements.
t. Overhead cable tray:
    1) Provide overhead cable tray along Test Bus and above major equipment.
u. Phone:
    1) Provide three phone lines.
v. Data:
    1) Provide minimum 24 LAN drops.

C. Health and Safety:

1. Provide gas monitoring and hydrogen system shut-off valves. Refer to section D-8.

2. Provide EPO (Emergency Power Off) switch to shut down power and isolate all mechanical utilities to shut down all flow.
3. Provide ventilation for the walk-in fume hood, research equipments and the test articles. Test articles will require air supply, exhaust and in some cases chilled water cooling.
4. Provide snorkel type exhausts on PE work benches, equipment development area and equipments area.
5. Provide pre-action fire suppression system for the locations with research equipments. Confirm locations with NREL Researchers after contract award.
6. PE work bench areas will be enclosed and the walls need to be designed to attenuate noise in each work bench area, mainly generated from the high frequency (10-20kHz) harmonic currents in the LC loads/filters.
7. Provide one 22 gal corrosive cabinet, one 22 gal flammable cabinet and one gas cabinet. Quantities are anticipated to be less than code maximum allowable quantities.
8. The design builder shall utilize the information given in the performance specifications and program for the types and quantities of hazardous materials located in the laboratory. After contract award, confirm the types and amounts of hazardous materials with the NREL researchers.
   a. Substantiation:
      1) Submit a list of all hazardous materials, as well as quantities, located in the laboratory. Provide all necessary building previsions to support the hazardous materials in the lab and facility in general.

D. Structure:

1. Provide interstitial space or catwalk system or other means to allow researchers convenient connection of experiments to the process utility grid system.
2. Provide suitable research and test equipment mounting. Generally, large equipments will sit on the floor. Some equipment will need to be mounted to the wall. Walls will be compatible with loading from electronics or other types of research enclosures via uni-strut or other universal framing methods.
3. The lab floor shall withstand heavy equipment; may require additional reinforcing/thickness or a structural slab.
4. If the lab is located in the second floor, make sure of the structural integrity under the weights of the various equipments that will be placed in the lab.

E. Durability:

1. Provide all necessary thermal expansion loops, anchors, guides and systems to accommodate the thermal expansion of the piping systems over the expected temperature ranges.
2. Provide insulation on all hydronic piping systems in accordance with their temperature ranges. Provide vapor barrier on cold piping to prevent condensation.

F. Operation and Maintenance:

1. Arrange bus drops to allow convenient access for researchers to connect to the Research Electrical Distribution Bus (REDB) for experiments. Allow for adequate access for installing future drops and future connections throughout all areas.
2. Arrange piping to allow convenient access for researchers to connect to the utility grid for experiments. Allow for adequate access for installing future piping and future connections.
3. Provide a high level of monitoring of both the process utility loops and the building system loops such that the researchers can identify the most energy efficient means for heat rejection and cooling needs

on the research loops. This monitoring shall interface to the SCADA control system. The SCADA front end control and monitoring will be located in the High Bay Control Room.

4. Substantiation:
   a. Provide functional testing of all process utility systems. Provide start-up reports and commissioning of research chilled water and research heating water loops and point-to-point testing of the entire SCADA control system and monitoring for mechanical utilities.
      1) Provide test and balance report included in the operation and maintenance manual.

END OF SECTION D99L

SECTION D99M
SMART GRID LABORATORY

PERFORMANCE

A. Basic Function:

1. This laboratory provides various loads that can be used to simulate a variety of appliance and other electrical demands.

2. The information contained herein is intended to compliment the program requirements and laboratory equipment list to identify and elaborate on unique requirements of the laboratory. Refer to other performance specifications and Section D Services for Mechanical, Electrical, Plumbing and Low Voltage system performance requirements.

3. The design builder shall utilize load information provided in the equipment list, program and performance specifications for the response to the RFP. After contract award, the design builder shall determine all mechanical and electrical utility loads for equipment and general use in the laboratory by extracting the load information from the NREL Researchers.
   a. Substantiation:
      1) Preliminary Design:
         a) Submit analysis and documentation of all process utility loads. Provide equipment lists summarizing all mechanical and electrical utilities and the associated load, flow rate, voltage, current and utility connections.

B. Amenity and Comfort:

1. Environment
   a. Air changes
      1) Exhausting provisions with makeup air may be required to lower internal temperature during large power load events
   b. Temperature/Humidity requirements:
      1) Standard temperature and humidity ranges per Facility Performance Section III.
      2) Temperature range may be exceeded during large power loads events. Not to exceed max operating temperature of equipment during operation or adversely affect other areas of the building.
   c. Light levels:
      1) Provide 20 footcandles average in the space during working hours.
      2) Provide 50 footcandles average on the work surfaces.

2. Provide the following systems:
   a. Provide ¾" overhead Compressed Air distribution within the lab with a minimum of six valved compressed air drops from the ceiling evenly distributed throughout the laboratory.
   b. Process Cooling Water for connection to water cooled load banks and other water cooled equipment. Provide 3" cooling loop distributed in an overhead looped system with a minimum of four valved connections for equipment.
   c. Provide distribution of the Research Electrical Distribution Bus (REDB) system as identified in section D8 Research Utilities. Provide interface to the SCADA control and monitoring system.
   d. Normal power requirements
      1) Provide convenience outlets at 6' minimum spacing on walls
      2) Provide power as required for equipment. See equipment lists for additional information.
         a) +-250KW DC station
         b) 250KW 480V to 250V Rectifier
         c) 10Kw 1ph AC Load Bank
         d) Residential Service and Breaker Panel set
         e) Industrial Service, motor control center and Breaker Panel set

f) Residential appliance test area
g) Ice storage air water chiller
h) Provide surface wiremold above workspaces with outlets 24" OC.

e. Backup power requirements
   1) Provide UPS power with normal power at computer locations.
f. Special Fire Alarm
   1) Provide Pre-Action Dry Pipe sprinkler system with Lab power interlock for fire control
g. Other Alarms
   1) No other alarms required.
h. Security requirements
   1) No Special Security Requirements.
i. Overhead Cable tray
   1) Provide Overhead Cable Tray along Test Bus and above major equipment.
j. Phone
   1) Provide two phone lines.
k. Data
   1) Provide minimum 4 LAN drops for workstations, room Ethernet switch will be capable of LAN drops from data cable tray to all major equipment.

3. This lab shall contain both facility power and connections to the Research Electrical Distribution Bus (REDB). The REDB is described in section 5.3.10, D59 and D8 of the program requirements documents. The REDB shall be installed in distributed locations in the lab, or can be integrated into select sub-bay resource drops. The REDB will be controlled from high bay control lab supervisory control and data acquisition (SCADA) system.

4. Substantiation:
   a. Preliminary Design:
      1) Provide one-line diagrams of all air and hydronic process, utility systems and heat recovery systems.
      2) Provide piping plans that show piping grid, branch take offs and interconnect to other laboratories with all control valves interface to the SCADA system.
      3) Provide SCADA system control schematic and sequence of operation that shows all monitoring and control points for all process utility systems.
      4) Provide diagrammatic layout of the major equipment in the space.

C. Health and Safety:

1. Provide (1) Flammables storage cabinet, and (1) Corrosives storage cabinet.

D. Durability:

1. Flooring: Provide flooring suitable to avoid damage by heavy equipment (typ. 1000-3000 lbs)

e. Operation and Maintenance:

1. Substantiation:
   a. Provide functional testing of all laboratory equipment and process utility systems. Provide start-up reports and commissioning of systems including point-to-point testing of the controls.
      1) Provide test and balance report included in the operation and maintenance manual.

END OF SECTION D99M

SECTION D99N
INSTRUMENT DEVELOPMENT LABORATORY (ELECTRICAL SHOP COMBINED INTO THIS LAB)

PERFORMANCE

A. Basic Function:

1. This lab will function as the electrical shop for the ESIF. Included are electrical component supplies, space for soldering electrical components, test equipment and wiring. Refer to the programming documents for additional information.

2. The information contained herein is intended to compliment the program requirements and laboratory equipment list to identify and elaborate on unique requirements of the laboratory. Refer to other performance specifications and Section D Services for Mechanical, Electrical, Plumbing and Low Voltage system performance requirements.

3. The design builder shall utilize load information provided in the equipment list, program and performance specifications for the response to the RFP. After contract award, the design builder shall determine all mechanical and electrical utility loads for equipment and general use in the laboratory by extracting the load information from the NREL Researchers.
   a. Substantiation:
      1) Preliminary Design:
         a) Submit analysis and documentation of all process utility loads. Provide equipment lists summarizing all mechanical and electrical utilities and the associated load, flow rate, voltage, current and utility connections.

B. Amenity and Comfort:

1. Provide the following systems:
   a. Access to Building Ground Grid
   b. Four Compressed Air drops evenly spaced at the work benches and provided to equipment
   c. Four Nitrogen gas drops located at the work benches.
   d. Vacuum distribution to four drops at work benches and provided to equipment. Locate the vacuum pump in the laboratory service corridor.
   e. 1/2″ hydrogen distribution piping into the lab. Locate drop near one of the work stations.
   f. Domestic hot and cold water drops provided at one work bench station.
   g. Four De-ionized Water drops provided at the work benches.
   h. Provide four exhaust drops at work stations for soldering operations.
   i. Normal power requirements
      1) Provide convenience outlets at 6' minimum spacing on walls
      2) Provide power as required for equipment. See equipment list.
      3) Provide 208 volt single phase outlets (30 amp) at 6' OC at built in work surfaces.
      4) Provide surface wiremold above the work surfaces with outlets 24" OC.
   j. Backup power requirements
      1) Provide UPS power with normal power at computer locations.
   k. Special Fire Alarm
      1) No Special Fire Alarm Requirements.
   l. Other Alarms
      1) No other alarms required.
   m. Security requirements
      1) No Special Security Requirements.
   n. Overhead Cable tray
      1) No special Overhead Cable Tray Requirements.
   o. Phone
      1) Provide two phone lines.
   p. Data

1) Provide minimum 16 LAN drops (enough to service 1/ea per work benches + 1/ea per built-in work areas).

q. Provide compressed air connections at all equipment requiring compressed air plus six additional drop spaced evenly throughout the lab. Provide 100 psi at all locations.

2. Environment:
   a. Light levels:
      1) Provide 20 footcandles average in the space during working hours.
      2) Provide 80 footcandles average on the work surfaces.
   b. This lab shall contain both facility power and connections to the Research Electrical Distribution Bus (REDB). The REDB is described in section 5.3.10, D59 and D8 of the program requirements documents. The REDB shall be installed in distributed locations in the lab, or can be integrated into select sub-bay resource drops. The REDB will be controlled from high bay control lab supervisory control and data acquisition (SCADA) system.

C. Health and Safety:

1. Provide grounding for Corrosive and Flammable storage cabinet.
2. Provide appropriate capture hoods for soldering fumes.
3. Provide gas monitoring for hydrogen fuels.
4. Provide automatic and manual fuel shut-off valves for all Research Fuel Systems.
5. Provide leak detection and shut-off valves for all hydronic and fuel systems.
6. Provide (1) corrosive storage cabinet and (1) flammable storage cabinet.
7. The design builder shall utilize the information given in the performance specifications and program for the types and quantities of hazardous materials located in the laboratory. After contract award, confirm the types and amounts of hazardous materials with the NREL researchers.
   a. Substantiation:
      1) Submit a list of all hazardous materials, as well as quantities, located in the laboratory. Provide all necessary building previsions to support the hazardous materials in the lab and facility in general.

D. Operation and Maintenance:

1. Substantiation:
   a. Provide functional testing of all process utility systems. Provide start-up reports, commissioning and point-to-point testing of the laboratory equipment and control system operation.
      1) Provide test and balance report included in the operation and maintenance manual.

END OF SECTION D99N

SECTION D99O
HYDROGEN SYSTEMS LABORATORY (HSL)

PERFORMANCE

A. Basic Function:

1. The basic function of the Hydrogen Systems Laboratory (HSL) is to test and characterize various hydrogen production, consumption, compression, storage and dispensing systems. Facility and research resources will enable safe and comprehensive operation of all equipment, while instrumentation and data acquisition will allow data collection and analysis of the systems.

2. The information contained herein is intended to compliment the program requirements and laboratory equipment list to identify and elaborate on unique requirements of the laboratory. Refer to other performance specifications and Section D Services for Mechanical, Electrical, Plumbing and Low Voltage system performance requirements.

3. The design builder shall utilize load information provided in the equipment list, program and performance specifications for the response to the RFP. After contract award, the design builder shall determine all mechanical and electrical utility loads for equipment and general use in the laboratory by extracting the load information from the NREL Researchers.
   a. Substantiation:
      1) Preliminary Design:
         a) Submit analysis and documentation of all process utility loads. Provide equipment lists summarizing all mechanical and electrical utilities and the associated load, flow rate, voltage, current and utility connections.

B. Amenity and Comfort:

1. Mechanical and Electrical Utilities:
   a. Provide glycol based liquid cooling loop to electrolyzer test area with heat rejection outdoors.
   b. Provide ASTM Type II de-ionized (DI) water to electrolyzer test area. DI water shall be distributed throughout the lab. Provide drains compatible with DI water.
   c. Provide overhead Process gas and Hydrogen piping distribution of sufficient capacity for laboratory needs. Provide six compressed air drops and six nitrogen drops complete with isolation valves and filter/regulators. Provide hydrogen piping distribution from electrolyzers to outdoor high pressure storage. Interface the hydrogen high pressure storage to the Hydrogen Research Fuels piping system.
   d. Provide hydrogen and oxygen vents to the outdoors from the hydrogen system.
   e. This lab shall contain both facility power and connections to the Research Electrical Distribution Bus (REDB). The REDB is described in section 5.3.10, D59 and D8 of the program requirements documents. The REDB shall be installed in distributed locations in the lab, or can be integrated into select sub-bay resource drops. The REDB will be controlled from high bay control lab supervisory control and data acquisition (SCADA) system.
   f. The lab shall have research bus (REDB) connections to the to the following labs: High bay Main Lab and Control Lab, Commercial Building High Bay Laboratory, Energy Storage Lab, Smart Grid Components Lab, Fuel Cell Lab, Outdoor Test Bed, and Roof Test Area.
   g. Provide research chilled water, research heating water and research fuels (hydrogen), piping loops in an accessible overhead service corridor or interstitial space to provide a mechanical system with multiple valved piping take offs to allow for connection of experiments within the laboratory.
   h. Provide twelve piping take offs for each system uniformly distributed throughout the laboratory. Piping take offs shall be provided with isolation valves, control valves, temperature sensors and flow meters with interface to SCADA system.
   i. The research chilled water loop shall include 4″ mains with 1-1/2″ branch take offs. The research heating water loop shall include 2″ mains with 1″ branch take offs. The research fuels will consist of2″ hydrogen mains and branch take offs.

j. The mechanical process utilities shall interface to the building condenser water process cooling loop the waste heat loop, Campus chilled water loop, Campus heating water loop, research low temperature chiller, research boiler by means of automatic control valves controlled by the SCADA system.
k. Provide process exhaust distribution consisting of (12) process exhaust drops uniformly distributed from the overhead utility grid.
l. Provide 2 snorkel type exhausts that can reach the research sub-bays and work bench areas.
m. The descriptions of the different laboratory functional areas are given in the corresponding section of the program requirements document. The electrical, cooling, gas and mechanical resources at these functional areas shall satisfy the requirements described in that section.
n. The requirements for the main entry to the lab and for each of the operational areas are detailed in the program requirements document.
o. Provide compressed air connections at all equipment requiring compressed air plus six additional drops spaced evenly throughout the lab. Provide 100 psi at all locations.
p. Substantiation:
    1) Preliminary Design:
        a) Provide one-line diagrams of all air and hydronic process, utility systems and heat recovery systems.
        b) Provide piping plans that show piping grid, branch take offs and interconnect to other laboratories with all control valves interface to the SCADA system.
        c) Provide SCADA system control schematic and sequence of operation that shows all monitoring and control points for all process utility systems.
        d) Normal power requirements:
        e) Provide convenience outlets at 6' minimum spacing on walls
        f) Provide power as required for equipment.
        g) Provide each research area with at least have 2 outlets each for 480 Vac, 208 Vac, 240 Vac and 6 outlets of 120Vac
q. Provide surface raceway above the counter with outlets 24" OC.
r. Backup power requirements:
    1) Provide UPS power with normal power at computer locations.
s. Special Fire Alarm:
    1) No special fire alarm Requirements.
t. Other Alarms:
    1) Provide audible and visual alarms for hydrogen monitoring systems.
u. Security requirements:
    1) No special security requirements.
v. Overhead Cable tray:
    1) Provide overhead cable tray along Test Bus and above major equipment.
w. Phone:
    1) Provide three phone lines.
x. Data:
    1) Provide minimum 24 LAN drops.
y. Substantiation:
    1) Preliminary Design:
        a) Provide one-line diagrams of all mechanical and electrical systems supporting the laboratory.
        b) Provide plans that show piping and ventilation systems with branch take offs and interconnect to the main distribution and other laboratories with all valves, dampers and controls.

2. Light levels:
    a. Provide 20 footcandles average in the space.
    b. Provide 50 footcandles average on the work surfaces.

C. Health and Safety:

1. Exhaust Requirements:
   a. Provide spot exhaust systems at three (3) locations for removing local hydrogen and oxygen gases.
   b. Provide a main lab-wide emergency hydrogen exhaust system for the test area that includes gas detectors tripping at 25% LFL and 50% LFL.
   c. Additional ventilation for the storage cabinets will not be required.
   d. Provide Class I, Division 2 explosion-proof construction when required by code.

2. Provide 45 gal corrosive storage cabinet, 22 gal flammable storage cabinet and 1 gas cabinet. Quantities are anticipated to be less than code maximum allowable quantities.

3. The design builder shall utilize the information given in the performance specifications and program for the types and quantities of hazardous materials located in the laboratory. After contract award, confirm the types and amounts of hazardous materials with the NREL researchers.
   a. Substantiation:
      1) Submit a list of all hazardous materials, as well as quantities, located in the laboratory. Provide all necessary building previsions to support the hazardous materials in the lab and facility in general.
4. Provide protection for all equipment and piping located outside from physical damage by means of bollards or similar protection.

D. Structure:

1. Test article mounting:
   a. Generally, large equipment will sit on or be mounted to the floor. If possible, sunken, inset attach points shall be provided to secure equipment to the floor.
   b. Some equipment will need to be mounted to the wall. Walls shall be compatible with loading from electronics or other types of research enclosures via uni-strut or other universal framing methods.

E. Durability:

1. Safety and detection equipment calibration
   a. Combustible gas detectors must be tested and calibrated every 6 months to ensure proper operation.
   b. UV/IR flame detectors must be tested with an actual hydrogen flame to verify sensitivity and field of view.

2. DI water drain piping shall be of a material to prevent corrosion.

F. Operation and Maintenance:

1. Provide the following systems:
   a. Connections to building ground (earth) grid
   b. Two countertop sinks
   c. De-ionized water - 10 gpm, water quality is not defined.
   d. Normal power requirements. Meet all hazardous requirements of the space.
      1) Provide convenience outlets at 10' minimum spacing on walls
      2) Provide power as required for equipment.
         a) Provide two 208 volt single phase outlets (30 amp)
         b) Provide surface raceway above the counter with outlets 24" OC.
   e. Backup power requirements
      1) Provide UPS power with normal power at computer locations.
   f. Special Fire Alarm
      1) If a flame detector detects a hydrogen flare or flame, the building fire alarm should trip.
   g. Other Alarms

1) A local laboratory alarm shall sound when the 25% LFL combustible gas limit is detected.

h. Security requirements

i. Overhead Cable tray

1) Provide Overhead Cable Tray along Test Bus and above major equipment.

j. Phone

1) Provide two phone lines.

k. Data

1) Provide minimum 6 LAN drops. Each LAN will have a small router switch to connect a few more networked devices.

2. Substantiation:

a. Provide functional testing of all process utility systems. Provide start-up reports and commissioning of mechanical and electrical utilities and Research equipment.

1) Provide test and balance report included in the operation and maintenance manual.

END OF SECTION D99O

SECTION D99P
MACHINE SHOP

PERFORMANCE

A. Basic Function:

1. The information contained herein is intended to compliment the program requirements and laboratory equipment list to identify and elaborate on unique requirements of the laboratory. Refer to other performance specifications and Section D Services for Mechanical, Electrical, Plumbing and Low Voltage system performance requirements.

2. The design builder shall utilize load information provided in the equipment list, program and performance specifications for the response to the RFP. After contract award, the design builder shall determine all mechanical and electrical utility loads for equipment and general use in the laboratory by extracting the load information from the NREL Researchers.
   a. Substantiation:
      1) Preliminary Design:
         a) Submit analysis and documentation of all process utility loads. Provide equipment lists summarizing all mechanical and electrical utilities and the associated load, flow rate, voltage, current and utility connections.

B. Amenity and Comfort:

1. Provide the following systems:
   a. Compressed Air connections at all equipment requiring compressed air for operation or cleaning. Provide 100 psi at the most remote outlet with all equipment in operation. Provide six additional compressed air drops evenly spaced throughout the shop at work benches. Provide valves and quick connect couplings. Provide a looped compressed air system in the ceiling area of the shop.
   b. Provide Domestic Water distribution with a piping loop and a minimum of six valved branch take-offs in the ceiling area. Provide domestic water distribution to equipment and plumbing fixtures.
   c. Provide double compartment stainless steel deep basin sink. Sink to be large enough for a mop bucket in either compartment.
   d. Normal power requirements
      1) Provide single and three phase power as required for machine shop equipment.
      2) Provide convenience outlets at 6' minimum spacing on walls.
      3) Provide surface raceway above the work surfaces with outlets 24" OC.
      4) Provide for single and three phase power expansion capability for additional or relocation of equipment.
      5) All machine shop equipment shall be equipped with required power transmission and point of operation guarding.
   e. Backup power requirements
      1) No special power requirements.
   f. Special Fire Alarm
      1) No special fire alarm requirements.
   g. Other Alarms
      1) No other alarms required.
   h. Security requirements
      1) No special security requirements.
      2) Provide a manufacturer packaged dust collection system for grinding and sanding operations. Confirm the materials to be collected during preliminary design and provide a system compatible with materials.
      3) Provide ventilation system with capture lead and duct drops with rear slot openings at all welding stations. This shall be a separate system from the snorkel exhaust system.
   i. Overhead Cable tray

1) Provide overhead cable tray above major equipment. There is no Research Test Bus in this lab.

j. Phone
   1) Provide two phone lines.

k. Data
   1) Provide minimum four LAN drops.

l. Environment
   1) Temperature/Humidity: Standard temperature and humidity ranges per Facility Performance Section III. Provide general exhaust in addition to the welding hood for good ventilation.
   2) Light levels:
      a) Provide High CRI lighting.
      b) Provide 80 footcandles average in the space and on the work surfaces.

C. Health and Safety:

1. Provide variable speed exhaust system with snorkel adjustable within 16 feet of and including the welding table for removing fumes.

2. Provide a manufacturer packaged dust collection system for grinding and sanding operations. Confirm the materials to be collected during Preliminary Design and provide a system compatible with materials.

3. Provide ventilation system with capture hood and duct drops with rear slot openings at all welding stations. This shall be a separate system from the snorkel exhaust system.

4. Provide access to building ground grid for Corrosive and Flammable storage cabinet.

5. Flammable liquids will consist of degreasers, spray paints, solvents and lubricating oils.

6. Provide 45 gal flammable storage cabinet with self closing doors. Quantities are anticipated to be less than code maximum allowable quantities.

7. The design builder shall utilize the information given in the performance specifications and program for the types and quantities of hazardous materials located in the laboratory. After contract award, confirm the types and amounts of hazardous materials with the NREL researchers.
   a. Substantiation:
      1) Submit a list of all hazardous materials, as well as quantities, located in the laboratory. Provide all necessary building previsions to support the hazardous materials in the lab and facility in general.

7. Oxygen and Acetylene cylinder storage shall comply with requirements set forth in 10 CFR 1910.253 (b).

E. Durability:
   1. Flooring: Provide flooring suitable to avoid damage by heavy equipment (typ. 100-2000 lbs) but also allow comfortable standing for long periods (e.g. tile).

F. Operation and Maintenance:
   1. Substantiation:
      a. Provide functional testing of all process utility systems. Provide start-up reports, commissioning and point-to-point testing of the laboratory equipment and control system operation.
         1) Provide test and balance report included in the operation and maintenance manual.

END OF SECTION D99P

SECTION D99Q
ENERGY STORAGE LABORATORY

PERFORMANCE

A. Basic Function:

1. Support the following functions:
   a. Develop and integrate new energy storage technologies for use with renewable and distributed energy systems.
   b. Test and demonstrate integration of energy storage with generations and loads.

2. The information contained herein is intended to compliment the program requirements and laboratory equipment list to identify and elaborate on unique requirements of the laboratory. Refer to other performance specifications and Section D Services for Mechanical, Electrical, Plumbing and Low Voltage system performance requirements.

3. The design builder shall utilize load information provided in the equipment list, program and performance specifications for the response to the RFP. After contract award, the design builder shall determine all mechanical and electrical utility loads for equipment and general use in the laboratory by extracting the load information from the NREL Researchers.
   a. Substantiation:
      1) Preliminary Design:
         a) Submit analysis and documentation of all process utility loads. Provide equipment lists summarizing all mechanical and electrical utilities and the associated load, flow rate, voltage, current and utility connections.

B. Amenity and Comfort:

1. Mechanical and Electrical Utilities:
   a. This lab shall be designed with both facility power and connections to the Research Electrical Distribution Bus (REDB). The REDB is described in section 5.3.10, D59, and D8 of the program requirements documents. The REDB shall be installed in distributed locations in the lab, or can be integrated into select sub-bay resource drops. The REDB will be controlled from high bay control lab supervisory control and data acquisition (SCADA) system.
   b. The lab shall have research bus (REDB).
   c. Provide research chilled water, research heating water and research fuels (hydrogen), piping loops in an accessible overhead service corridor or interstitial space to provide a mechanical system with multiple valved piping take offs to allow for connection of experiments within the laboratory.
   d. Provide twelve piping take offs for each system uniformly distributed throughout the laboratory. Piping take offs shall be provided with isolation valves, control valves, temperature sensors and flow meters with interface to SCADA system.
   e. The research chilled water loop shall include 4" mains with 1-1/2" branch take offs. The research heating water loop shall include 2" mains with 1" branch take offs. The research fuels will consist of 2" hydrogen mains and branch take offs.
   f. The mechanical process utilities shall interface to the building condenser water process cooling loop the waste heat loop, Campus chilled water loop, Campus heating water loop, research low temperature chiller, research boiler by means of automatic control valves controlled by the SCADA system.
   g. The mechanical utilities within this laboratory will be closely related to the High Bay Laboratory and the Power Electronics Laboratory. The SCADA front end controls and monitoring will be located in the High Bay control room. Refer to section D8 Process Utilities for additional information.
   h. Provide process exhaust distribution consisting of six process exhaust drops uniformly distributed from the overhead utility grid.

2. Substantiation:
   a. Preliminary Design:
      1) Provide one-line diagrams of all air and hydronic process, utility systems and heat recovery systems.
      2) Provide piping plans that show piping grid, branch take offs and interconnect to other laboratories with all control valves interface to the SCADA system.
      3) Provide SCADA system control schematic and sequence of operation that shows all monitoring and control points for all process utility systems.

3. Ventilation: Provide exhaust for battery systems as required by code.

4. Light levels:
   a. Provide 30 footcandles average in the space during working hours.
   b. Provide 75 footcandles average on the work surfaces.

5. Normal power requirements
   a. Provide convenience outlets at 10' minimum spacing on walls
   b. Provide utility power as required for equipment
   c. Provide surface raceway above the work surfaces with outlets 24" OC - minimum three receptacles per 5-foot bench top

6. Backup power requirements
   a. Provide UPS power with normal power at computer locations.
   b. Provide emergency ventilation system in case of chemical gas eventuality in the lab.

7. Special Fire Alarm
   a. No Special Fire Alarm Requirements.

8. Other Alarms
   a. Provide audible and visual alarms for hydrogen monitoring systems.

9. Security requirements
   a. No Special Security Requirements.

10. Overhead Cable tray
    a. Provide Overhead Cable Tray along Test Bus and above major equipment.

11. Phone
    a. Provide two phone lines.

12. Data
    a. Provide minimum 8 LAN drops

13. Provide compressed air connections at all equipment requiring compressed air plus six additional drop spaced evenly throughout the lab. Provide 100 psi at all locations.

C. Health and Safety:

1. Air exhaust fans shall be operational while testing is underway.

2. A fume snorkel must be available to ventilate any dangerous emissions from batteries or smoke for any equipment.

3. Provide gas monitoring and hydrogen system shut-off valves. Refer to section D-8.

4. Provide EPO (Emergency Power Off) switch to shut down power and isolate all mechanical utilities to shut down all flow.

5. Provide leak detection and shut-off valves for all hydronic and fuel utilities into the lab.

6. Provide 45 gallon flammable storage cabinet and a corrosive storage cabinet. Quantities are

anticipated to be less than code maximum allowable quantities.

7. The design builder shall utilize the information given in the performance specifications and program for the types and quantities of hazardous materials located in the laboratory. After contract award, confirm the types and amounts of hazardous materials with the NREL researchers.
   a. Substantiation:
      1) Submit a list of all hazardous materials, as well as quantities, located in the laboratory. Provide all necessary building previsions to support the hazardous materials in the lab and facility in general

D. Structure:

1. Walls must be capable of supporting research enclosures of less than about 100 kg.
2. Containment provisions are required with batteries
3. For lead acid or other batteries containing liquid or acid materials, liquid containment, ventilation and clean-up chemicals must be available.
4. For batteries having a risk of overheating or catching fire, air containment around the battery is required, including ventilation.
5. Provide interstitial space or catwalk system or other means to allow researchers convenient connection of experiments to the process utility grid system.

E. Durability:

1. Provide all necessary thermal expansion loops, anchors, guides and systems to accommodate the thermal expansion of the piping systems over the expected temperature ranges.
2. Provide insulation on all hydronic piping systems in accordance with their temperature ranges. Provide vapor barrier on cold piping to prevent condensation

F. Operation and Maintenance:

1. Arrange bus drops to allow convenient access for researchers to connect to the Research Electrical Distribution Bus (REDB) for experiments. Allow for adequate access for installing future drops and future connections.
2. Arrange piping to allow convenient access for researchers to connect to the utility grid for experiments. Allow for adequate access for installing future piping and future connections.
3. Provide a high level of monitoring of both the process utility loops and the building system loops such that the researchers can identify the most energy efficient means for heat rejection and cooling needs on the research loops. This monitoring shall interface to the SCADA control system. The SCADA front end control and monitoring will be located in the High Bay Control Room.
4. Substantiation:
   a. Provide functional testing of all process utility systems. Provide start-up reports and commissioning of research chilled water and research heating water loops and point-to-point testing of the entire SCADA control system and monitoring for mechanical utilities.
   b. Provide test and balance report included in the operation and maintenance manual.

END OF SECTION D99Q

SECTION D99R
ELECTRICAL VISUALIZATION LABORATORY

PERFORMANCE

A. Basic Function:

1. The information contained herein is intended to compliment the program requirements and laboratory equipment list to identify and elaborate on unique requirements of the laboratory. Refer to other performance specifications and Section D Services for Mechanical, Electrical, Plumbing and Low Voltage system performance requirements.

2. The design builder shall utilize load information provided in the equipment list, program and performance specifications for the response to the RFP. After contract award, the design builder shall determine all mechanical and electrical utility loads for equipment and general use in the laboratory by extracting the load information from the NREL Researchers.
   a. Substantiation:
      1) Preliminary Design:
         a) Submit analysis and documentation of all equipment and utility loads. Provide equipment lists summarizing all mechanical and electrical utilities and the associated load, heat release, voltage, current and utility connections.

B. Amenity and Comfort:

1. Provide normal power, Backup power, phone and data connections necessary for the Rear-Projection display equipment, screen, workstations, audio system and other equipment identified. Refer to project program.

2. The acoustics in this room shall minimize any noise exterior to the room. Sound deadening panels shall be used on the control room walls and ceilings. High definition speakers and sound system shall be installed in this room.

C. Operation and Maintenance

1. Substantiation
   a. Provide functional testing of building HVAC, electrical and IT systems.

END OF SECTION D99R

SECTION D99S
ZEB SIMULATION LABORATORY

PERFORMANCE

A. Basic Function:
   1. Test and demonstrate prototype building design tools and visualization methods for Zero Energy Buildings (ZEB).
   2. The information contained herein is intended to compliment the program requirements and laboratory equipment list to identify and elaborate on unique requirements of the laboratory. Refer to other performance specifications and Section D Services for Mechanical, Electrical, Plumbing and Low Voltage system performance requirements.
   3. The design builder shall utilize load information provided in the equipment list, program and performance specifications for the response to the RFP. After contract award, the design builder shall determine all mechanical and electrical utility loads for equipment and general use in the laboratory by extracting the load information from the NREL Researchers.
      a. Substantiation:
         1) Preliminary Design:
            a) Submit analysis and documentation of all process utility loads. Provide equipment lists summarizing all mechanical and electrical utilities and the associated load, flow rate, voltage, current and utility connections.

B. Amenity and Comfort:
   1. Temperature/Humidity: Standard temperature and humidity ranges per Facility Performance Section III.
   2. Light levels:
      a. Provide 20 footcandles average in the space during working hours.
      b. Provide 50 footcandles average on the work surfaces.
   3. Provide the following systems:
      a. Normal power requirements
         1) Provide convenience outlets at 10' minimum spacing on walls
         2) Provide power as required for equipment.
         3) Provide 120 volt single phase outlets (30 amp) at 6' OC above work surfaces.
         4) Provide surface raceway above the work surfaces with outlets 24" OC.
      b. Backup power requirements
         1) Provide UPS power with normal power at computer locations.
      c. Special Fire Alarm
         1) No Special Fire Alarm Requirements.
      d. Other Alarms
         1) No other alarms required.
      e. Security requirements
         1) No Special Security Requirements.
      f. Phone
         1) Provide two phone lines.
      g. Data
         1) Provide minimum 8 LAN drops.
      o. Provide compressed air connections at all equipment requiring compressed air plus six additional drop spaced evenly throughout the lab. Provide 100 psi at all locations.

C. Operation and Maintenance:
   1. Substantiation:
      a. Provide functional testing of all laboratory equipment and process utility systems. Provide start-up reports and commissioning of systems including point-to-point testing of the controls.
      b. Provide test and balance report included in the operation and maintenance manual.

END OF SECTION D99S

SECTION D99TA
THERMAL STORAGE MATERIALS LABORATORY

PERFORMANCE

A. Basic Function:

1. Support the following function:
   a. General Instrumentation/Chemistry Lab requirements.
   b. Analysis and testing of heat transfer fluids and thermal energy storage materials.

2. The information contained herein is intended to compliment the program requirements and laboratory equipment list to identify and elaborate on unique requirements of the laboratory. Refer to other performance specifications and Section D Services for Mechanical, Electrical, Plumbing and Low Voltage system performance requirements.

3. The design builder shall utilize load information provided in the equipment list, program and performance specifications for the response to the RFP. After contract award, the design builder shall determine all mechanical and electrical utility loads for equipment and general use in the laboratory by extracting the load information from the NREL Researchers.
   a. Substantiation:
      1) Preliminary Design:
         a) Submit analysis and documentation of all process utility loads. Provide equipment lists summarizing all mechanical and electrical utilities and the associated load, flow rate, voltage, current and utility connections.

B. Amenity and Comfort:

1. Environment:
   a. Temperature/Humidity: Standard temperature and humidity ranges per Facility Performance Section III.
   b. Lighting:
      1) Provide 30 footcandles average in the space during working hours.
      2) Provide 75 footcandles average on the work surfaces.
      3) Provide emergency egress lighting per IBC.
      4) Provide lighting within the exhausted enclosure.
   c. Ventilation: Provide general laboratory ventilation through the HVAC system. Provide process exhaust with (6) - 6″ exhaust drops evenly distributed throughout the lab. Provide seal-tight balancing dampers.

2. Provide the following systems:
   a. Provide ¾″ overhead Compressed Air distribution within the lab with a minimum of six valved compressed air drops from the ceiling evenly distributed throughout the laboratory.
   b. Provide 3/4″ domestic hot and cold water with (6) valved takeoffs evenly distributed throughout the laboratory.
   c. Provide 3/4″ de-ionized water with (6) valved takeoffs evenly distributed throughout the laboratory.
   d. Provide 3/4″ nitrogen with (6) valved takeoffs evenly distributed throughout the laboratory.
   e. Mounts for inert gas cylinders with manifolds and tubing to instruments.
   f. Normal power requirements
      1) Provide convenience outlets at 10' minimum spacing on walls
      2) Provide power as required for equipment.
         a) Provide 208 volt single phase outlets (30 amp) at four locations within the lab.
         b) Provide tombstone utility service with outlets 24″ OC - minimum three receptacles per 5-foot benchtop on peninsulas.
         c) Provide power to interior of exhausted enclosure.

g. Backup power requirements
   1) Provide UPS power with normal power at computer locations.
h. Special Fire Alarm
   1) No Special Fire Alarm Requirements.
i. Other Alarms
   1) No other alarms required.
j. Security requirements
   1) No Special Security Requirements.
k. Overhead Cable tray
   1) No overhead cable tray.
l. Phone
   1) Provide two phone lines.
m. Data
   1) Provide minimum six LAN drops.

C. Health and Safety:

1. Provide 2 benchtop fume hoods with HEPA filtration for nanomaterials.

2. Provide 1 10' x 10' x 7' high exhausted enclosure fabricated from demountable corrosion resistant and scrubable partitions with large vision panels. Minimize opening sizes to provide proper ventilation within enclosure while minimizing the operating air quantity. Air velocity across any openings shall be a minimum of 100 fpm. Provide HEPA filtration for nanomaterials. Electrical installation within the enclosure shall meet NFPA 70 requirements for a Class 1, Division 2 location.

3. Provide (1) corrosive storage cabinet. Quantities are anticipated to be less than code maximum allowable quantities.

4. The design builder shall utilize the information given in the performance specifications and program for the types and quantities of hazardous materials located in the laboratory. After contract award, confirm the types and amounts of hazardous materials with the NREL researchers.
   a. Substantiation:
      1) Submit a list of all hazardous materials, as well as quantities, located in the laboratory. Provide all necessary building previsions to support the hazardous materials in the lab and facility in general.

5. Provide six 6" exhaust drops evenly distributed throughout the lab with seal-tight balancing dampers for connection of local snorkel exhaust.

D. Durability:

1. Flooring: Provide flooring suitable to avoid damage by heavy equipment. (typ. 1000-3000 lbs)

E. Operation and Maintenance:

1. Substantiation
   a. Provide functional testing of all laboratory equipment and process utility systems. Provide start-up reports and commissioning of systems including point-to-point testing of the controls.
   b. Provide test and balance report included in the operation and maintenance manual.

END OF SECTION D99TA

SECTION D99TB
THERMAL STORAGE PROCESS & COMPONENTS LABORATORY

PERFORMANCE

A. Basic Function: Support the following function:

1. Pilot-scale testing of skid-mounted thermal energy storage processes and equipment.
2. This laboratory provides various loads that can be used to simulate a variety of appliance and other electrical demands.
3. The information contained herein is intended to compliment the program requirements and laboratory equipment list to identify and elaborate on unique requirements of the laboratory. Refer to other performance specifications and Section D Services for Mechanical, Electrical, Plumbing and Low Voltage system performance requirements.
4. The design builder shall utilize load information provided in the equipment list, program and performance specifications for the response to the RFP. After contract award, the design builder shall determine all mechanical and electrical utility loads for equipment and general use in the laboratory by extracting the load information from the NREL Researchers.
    a. Substantiation:
        1) Preliminary Design:
            a) Submit analysis and documentation of all process utility loads. Provide equipment lists summarizing all mechanical and electrical utilities and the associated load, flow rate, voltage, current and utility connections.

B. Amenity and Comfort:

1. Environment:
    a. Temperature/Humidity: Standard temperature and humidity ranges per Facility Performance Section III.
        1) Light levels:
            a) Provide 30 footcandles average in the space during working hours.
            b) Provide 75 footcandles average on the work surfaces.
            c) Provide emergency egress lighting per IBC.
            d) Provide lighting within the exhausted enclosure.
2. Provide the following systems:
    a. Provide ¾" overhead Compressed Air distribution within the lab with a minimum of six valved compressed air drops from the ceiling evenly distributed throughout the laboratory.
    b. Provide 3/4" domestic hot and cold water with (6) valved takeoffs evenly distributed throughout the laboratory.
    c. Provide 3/4" de-ionized water with (6) valved takeoffs evenly distributed throughout the laboratory.
    d. Provide 3/4" nitrogen with (6) valved takeoffs evenly distributed throughout the laboratory.
    e. Mounts for inert gas cylinders with manifolds and tubing to instruments.
    f. Normal power requirement
        1) Provide power strip with duplex outlets at 2-ft spacing on walls
            a) Provide multiple 480 volt single-phase outlets/circuits for up to 100 kW
            b) Provide overhead raceway above the open floor space with quad drop-boxes or outlets every 6-ft
    g. Backup power requirements
        1) Provide UPS power with normal power at computer locations.
    h. Special Fire Alarm
        1) No Special Fire Alarm Requirements.
    i. Other Alarms

1) Alarms for NOx, CO, and minimum oxygen level.

j. Security requirements
   1) No Special Security Requirements.

k. Overhead Cable tray
   1) Provide Overhead Cable Tray above open floor space as listed in Normal Power Requirements above.

l. Phone
   1) Provide two phone lines.

m. Data
   1) Provide minimum six LAN drops.

C. Health and Safety:

1. Provide one benchtop fume hood with HEPA filtration for nanomaterials.

2. Provide six 6" exhaust drops evenly distributed throughout the lab with seal-tight balancing dampers for connection of local snorkel exhaust.

3. The design builder shall utilize the information given in the performance specifications and program for the types and quantities of hazardous materials located in the laboratory. After contract award, confirm the types and amounts of hazardous materials with the NREL researchers.
   a. Substantiation:
      1) Submit a list of all hazardous materials, as well as quantities, located in the laboratory. Provide all necessary building previsions to support the hazardous materials in the lab and facility in general.

D. Durability:

1. Flooring: Provide flooring suitable to avoid damage by heavy equipment (typ. 1000-3000 lbs.)

E. Operation and Maintenance:

1. Substantiation
   a. Provide functional testing of all laboratory equipment and process utility systems. Provide start-up reports and commissioning of systems including point-to-point testing of the controls.
      1) Provide test and balance report included in the operation and maintenance manual.

END OF SECTION D99TB

SECTION D99U
METROLOGY LABORATORY

PERFORMANCE

A. Basic Function: Support the following functions:

1. Maintain calibration reference standard instruments for electrical, optical, and physical properties.
2. Perform routine calibrations of Measurement and Test Equipment (MTE)
3. Monitor MET lab environment.
4. Meet and certify requirements of RF shielded room, rated for 2.5 GHz, see "General Laboratory Specifications".
5. Meet requirements of Optics lab portion - Blackout capabilities.
6. The information contained herein is intended to compliment the program requirements and laboratory equipment list to identify and elaborate on unique requirements of the laboratory. Refer to other performance specifications and Section D Services for Mechanical, Electrical, Plumbing and Low Voltage system performance requirements.
7. The design builder shall utilize load information provided in the equipment list, program and performance specifications for the response to the RFP. After contract award, the design builder shall determine all mechanical and electrical utility loads for equipment and general use in the laboratory by extracting the load information from the NREL Researchers.
   a. Substantiation:
      1) Preliminary Design:
         a) Submit analysis and documentation of all process utility loads. Provide equipment lists summarizing all mechanical and electrical utilities and the associated load, flow rate, voltage, current and utility connections.
8. Provide isolated power to all equipment and devices within this lab.
9. Construction shall meet and certify requirements called out in NCSLI-RP-7 "Laboratory Design-Recommend Practice". The Metrology Lab, Electrical and Shield rooms, will be certified by an ISO-17025 accredited organization, Grounding grid for entire rooms <5 ohms, RFI suppression Internal Field Strength <50 microvolt/Meter, EMI suppression Internal Field Strength <50 microvolt/Meter, shield room certification/testing to >80db attenuation, up to frequency = 2.5 GHz.

B. Amenity and Comfort:

1. Environment:
   a. Temperature/Humidity: Maintain temperature setpoint at 23°C +/- 0.5°C. Maintain relative humidity at 35% RH +/- 10% RH. The relative humidity within the optics room must be maintained at 25% RH +/- 10% RH. These temperature and humidity requirements will apply to any point within the room and requires certification that these parameters have been met.
      1) Substantiation:
         a) Preliminary Design: Submit plans of proposed HVAC systems with control systems sequence of operation.
         b) Construction: Performance testing with 7-day trend logs of temperature and humidity at a minimum of (8) locations in the space. (at least 3 x 3 feet separation between locations. Fire locations in the electrical room and three in the shield room.
   b. Room pressurization: Maintain the room to a positive pressure of 0.1 inches of water column relative to adjacent spaces when the fume hood is not in use.
   c. Equipment Load: Assume equipment heat load at 40 kW.
   d. Light levels:

1) Provide 80 foot-candles at 36 inches above finished floor.
2) Provide emergency egress lighting per IBC.
3) Provide blackout capabilities in optics lab portion.

2. Provide the following systems:
   a. Provide a 5' x 3' 600 cfm, manual shutter, variable speed exhaust hood for the metrology lab and a 2' x 2' 300 cfm, manual shutter, variable speed exhaust hood for the optics lab mounted above the work bench flush with the ceiling. The hoods shall have a manual seal-tight damper to close when not in use.
   b. Provide monitoring of temperature, pressure and relative humidity, with long term (minimum 5 year) data storage and printing capability.
   c. Normal power requirements
      1) Provide convenience outlets at 10' minimum spacing on walls
      2) Provide power and ground bus as required for equipment.
      3) Provide 208 volt single phase outlets (30 amp) at 6' OC at work surfaces.
      4) Provide 480 volt three phase disconnect (30 amp) for equipment power connection.
   d. Provide surface raceway above the work surfaces with outlets 24" OC.
      1) Inline power quality conditioner outside of the lab area.
   e. Backup power requirements
      1) Provide UPS power with normal power at computer locations.
   f. Special Fire Alarm
      1) No Special Fire Alarm Requirements.
   g. Other Alarms
      1) No other alarms required.
   h. Security requirements
      1) Access to the laboratory for metrology lab staff only. This will be a secured lab and staging area.
   i. Overhead Cable tray
      1) None required.
   j. Phone
      1) Provide minimum two phone lines.
   k. Data
      1) Provide minimum ten LAN drops.
   l. Provide compressed air connections at all equipment requiring compressed air plus one additional drop in the optics and electric calibration lab. Provide 100 psi at all locations.
   m. Provide the following systems:
      a. Provide monitoring of temperature, pressure and relative humidity, with long term (minimum 5 year) data storage and printing capability.
      b. Normal power requirements
         1) Provide power and ground buss as required for equipment.

C. Health and Safety:

2. Exhaust Requirements: Provide a dedicated exhaust system directly above the Optic bench for removal of ozone. The exhaust fan shall be variable speed type. A wall switch shall power off the fan and automatic damper.

D. Operation and Maintenance:

1. Substantiation:
   a. Provide functional testing of all laboratory equipment and process utility systems. Provide start-up reports and commissioning of systems including point-to-point testing of the controls.
   b. Provide test and balance report included in the operation and maintenance manual.
   c. Provide a certificate from an ISO17025 accredited lab for meeting a lab specification.
   d. Construction: Performance testing with 7-day trend logs of temperature and humidity at a minimum of (8) locations in the space (at least 3x3 separation between locations, five locations in electrical room and three locations in shield room.)

END OF SECTION D99U

SECTION D99V
MANUFACTURING LABORATORY

PERFORMANCE

A. Basic Function:

1. The information contained herein is intended to compliment the program requirements and laboratory equipment list to identify and elaborate on unique requirements of the laboratory. Refer to other performance specifications and Section D Services for Mechanical, Electrical, Plumbing and Low Voltage system performance requirements.

2. The design builder shall utilize load information provided in the equipment list, program and performance specifications for the response to the RFP. After contract award, the design builder shall determine all mechanical and electrical utility loads for equipment and general use in the laboratory by extracting the load information from the NREL Researchers.
   a. Substantiation:
      1) Preliminary Design:
         a) Submit analysis and documentation of all process utility loads. Provide equipment lists summarizing all mechanical and electrical utilities and the associated load, flow rate, voltage, current and utility connections.

B. Amenity and Comfort:

1. Environment:
   a. Temperature/Humidity: Temperature and humidity need to be monitored and recorded (continuously) through the building Automation System around the Web line. Provide a minimum of 1 year storage capability of trend logs. Maintain humidity between 25% and 70% RH. Humidity rate of change shall be minimized.
   b. Light levels:
      1) Provide directional control of lighting at workstations.
      2) Provide 20 footcandles average in the space.
      3) Provide 50 footcandles average on the work surfaces.

2. Provide the following systems:
   a. Exhaust Requirements: Provide 6″ exhaust snorkel type spot ventilation for MEA fabrication. Provide (4) 6″ drops with dampers.
   b. Provide ¾″ Compressed Air distribution with (6) valved connections evenly distributed throughout the lab.
   c. Normal power requirements
      1) Provide convenience outlets at 10' minimum spacing on walls
      2) Provide power as required for equipment.
      3) Provide two 208 volt single phase outlets (30 amp)
      4) Provide three 480V3 phase drops from ceiling in specified 8 x 20 foot space for web line power.
      5) Provide surface raceway above the counter 24" OC.
   d. Backup power requirements
      1) No backup power outlets required.
   e. Special Fire Alarm
      1) No Special Fire Alarm Requirements.
   f. Other Alarms
      1) No other alarms required.
   g. Security requirements
      1) No Special Security Requirements.
   h. Overhead Cable tray
      1) Provide Overhead Cable Tray

i. Phone
   1) Provide one phone line.
j. Data
   1) Provide minimum 5 LAN drops.
k. Provide compressed air connections at all equipment requiring compressed air plus six additional drop spaced evenly throughout the lab. Provide 100 psi at all locations.
l. Provided 1 fume hood as listed in the equipment list. Fume hoods must be able to be fitted with HEPA filtration in case of future nano-material use.

C. Health and Safety:

1. Provide (2) flammable storage cabinets. Quantities are anticipated to be less than code maximum allowable quantities.
   a. Flammables: solvents (liquids)

2. The design builder shall utilize the information given in the performance specifications and program for the types and quantities of hazardous materials located in the laboratory. After contract award, confirm the types and amounts of hazardous materials with the NREL researchers.

3. Substantiation:
   a. Submit a list of all hazardous materials, as well as quantities, located in the laboratory. Provide all necessary building previsions to support the hazardous materials in the lab and facility in general.

D. Structure:

E. Durability:

F. Operation and Maintenance:

1. Substantiation:
   a. Provide functional testing of all process utility systems. Provide start-up reports and commissioning of mechanical and electrical utilities and Research equipment.
   b. Provide test and balance report included in the operation and maintenance manual.

END OF SECTION D99V

SECTION D99W
MEA LABORATORY

PERFORMANCE

A. Basic Function:

1. The information contained herein is intended to compliment the program requirements and laboratory equipment list to identify and elaborate on unique requirements of the laboratory. Refer to other performance specifications and Section D Services for Mechanical, Electrical, Plumbing and Low Voltage system performance requirements.

2. The design builder shall utilize load information provided in the equipment list, program and performance specifications for the response to the RFP. After contract award, the design builder shall determine all mechanical and electrical utility loads for equipment and general use in the laboratory by extracting the load information from the NREL Researchers.
   a. Substantiation:
      1) Preliminary Design: Submit analysis and documentation of all process utility loads. Provide equipment lists summarizing all mechanical and electrical utilities and the associated load, flow rate, voltage, current and utility connections

B. Amenity and Comfort:

1. Temperature/Humidity: Standard temperature and humidity ranges per Facility Performance Section III. Humidity will be controlled to a range of 25% - 50% RH to prevent excessive water uptake within polymers.

2. Light levels:
   a. 1) Provide 20 footcandles average in the space during working hours.
   b. 2) Provide 50 footcandles average on the work surfaces.

3. Provide the following systems:
   a. Provide (6) snorkels or drop-downs at material prep workstations. Connections shall be 6" with seal-tight balance dampers.
   b. Provide 3/4" de-ionized water with (6) valved takeoffs evenly distributed throughout the laboratory.
   c. Provide a vacuum system with the vacuum pump located in the service corridor. This system serves vacuum tables and requires high volume and low vacuum levels.
   d. Provide 1/2" Hydrogen with (3) valved takeoffs evenly distributed throughout the laboratory.
   e. Provide 1/2" Nitrogen with (6) valved takeoffs evenly distributed throughout the laboratory.
   f. Provide 3/4" compressed air with (6) valved takeoffs evenly distributed throughout the laboratory.
   g. Provide 1/4" Argon distributed from the bottles in the lab service corridor to the work benches.
   h. Provide H_2, H_2S, O_2 and CO gas monitoring and alarms.
   i. Provide four 208v 20a outlets.
   j. Accurate temperature and humidity measurement system.
   k. Normal power source to each equipment listed.
   l. Security requirements
      1) No Special Security Requirements.
   m. Overhead Cable tray
      1) Provide Overhead Cable Tray along Test Bus and above major equipment.
   n. Phone
      1) Provide three phone lines.
   o. Data
      1) Provide minimum 8 LAN drops.
   p. Provide compressed air connections at all equipment requiring compressed air plus six additional drop spaced evenly throughout the lab. Provide 100 psi at all locations.

q. Provide 3 standard fume hoods, 1 laminar flow fume hood and one 4' x 3' benchtop environmental chamber. Fume hoods must be able to be fitted with HEPA filtration in case of future nano-material use.

C. Health and Safety:

1. Provide (2) corrosive storage cabinets, (2) flammable storage cabinets, and (4) gas cabinets. Quantities are anticipated to be less than code maximum allowable quantities.
2. Corrosives: acids and bases (liquids),
3. Cryogenics: liquid N_2
4. Flammables: H2S, H_2 and CH_4 (gas)
5. Flammables: solvents (liquids), H_2 and CH_4 (gas)
6. Toxics: solvents (liquids), NO_2 , CO and H_2S (gas)
7. Oxidizers: NO_2, , O_2, H_2O_2 (gas)
8. The design builder shall utilize the information given in the performance specifications and program for the types and quantities of hazardous materials located in the laboratory. After contract award, confirm the types and amounts of hazardous materials with the NREL researchers.
9. Substantiation:
   a. Submit a list of all hazardous materials, as well as quantities, located in the laboratory. Provide all necessary building previsions to support the hazardous materials in the lab and facility in general.

D. Operation and Maintenance:

1. Substantiation:
   a. Provide functional testing of all process utility systems. Provide start-up reports and commissioning of mechanical and electrical utilities and Research equipment.
   b. Provide test and balance report included in the operation and maintenance manual.

END OF SECTION D99W

SECTION D99X
SENSOR LABORATORY

PERFORMANCE

A. Basic Function:

1. The information contained herein is intended to compliment the program requirements and laboratory equipment list to identify and elaborate on unique requirements of the laboratory. Refer to other performance specifications and Section D Services for Mechanical, Electrical, Plumbing and Low Voltage system performance requirements.

2. The design builder shall utilize load information provided in the equipment list, program and performance specifications for the response to the RFP. After contract award, the design builder shall determine all mechanical and electrical utility loads for equipment and general use in the laboratory by extracting the load information from the NREL Researchers.
   a. Substantiation:
      1) Preliminary Design:
         a) Submit analysis and documentation of all process utility loads. Provide equipment lists summarizing all mechanical and electrical utilities and the associated load, flow rate, voltage, current and utility connections

B. Amenity and Comfort:

1. Environment
   a. Temperature/Humidity: Standard temperature and humidity ranges per Facility Performance Section III.
   b. Light levels:
      1) Provide 20 footcandles average in the space during working hours.
      2) Provide 75 footcandles average on the work surfaces.
      3) Provide emergency egress lighting per IBC.

2. Provide the following systems:
   a. Two separate hydrogen piping systems will need to be provided. One will be from the house hydrogen distribution system, and the other from a controlled purity bottle system. Both are 1/2" and have evenly distributed valved drops throughout the laboratory.
   b. Provide 1/2" Nitrogen with (6) valved takeoffs evenly distributed throughout the laboratory.
   c. Provide 3/4" Compressed Air wit (6) valved takeoffs evenly distributed throughout the laboratory.
   d. Provide 1/4" Argon distributed from the bottles in the lab service corridor to the work benches.
   e. Provide 18 megaohm Deionized Water with evenly distributed drops throughout the laboratory.
   g. Provide H_2 gas monitoring.
   h. Provide 6" exhaust snorkels for each bench. Provide 6 inch exhaust drops evening distributed throughout the lab with seal-tight balancing dampers with snorkels.
   i. Normal power requirements
      1) Provide convenience outlets at 10' minimum spacing on walls
      2) Provide power as required for equipment.
      3) Provide 208 volt single phase outlets (30 amp) at 6' OC above work surfaces.
      4) Provide surface raceway above the work surfaces with outlets 24" OC.
   j. Backup power requirements
      1) Provide UPS power with normal power at computer locations.
   k. Special Fire Alarm
      1) No Special Fire Alarm Requirements.
   l. Other Alarms
      1) No other alarms required.
   m. Security requirements
      1) No Special Security Requirements.

n. Overhead Cable tray
   1) Provide Overhead Cable Tray along Test Bus and above major equipment.
o. Phone
   1) Provide two phone lines.
p. Data
   1) Provide minimum ten LAN drops.
q. Exhaust Requirements: Provide snorkel/drop-down type ventilation at the material preparation workstations.
r. Gas Monitoring: Provide hydrogen, hydrogen sulfide, oxygen and carbon monoxide gas monitors.
s. Provide compressed air connections at all equipment requiring compressed air plus six additional drop spaced evenly throughout the lab. Provide 100 psi at all locations.
t. Two chemical fume hoods and a laminar flow hood/bench are required in this lab.
u. A 4′ x 5′ x 6′ walk in hood or enclosure is required in this lab.

C. Health and Safety:

1. Provide (1) corrosive storage cabinet, (1) flammable storage cabinets and (4) gas storage cabinets. Quantities are anticipated to be less than code maximum allowable quantities.
2. Corrosives: acids and bases (liquids),
3. Cryogenics: liquid N_2
4. Flammables: H_2 and CH_4 (gas).
5. Flammables: solvents (liquids), H_2 and CH_4 (gas).
6. Toxics: solvents (liquids), CO and H_2S (gas).
7. Oxidizers: NO_2.
8. The design builder shall utilize the information given in the performance specifications and program for the types and quantities of hazardous materials located in the laboratory. After contract award, confirm the types and amounts of hazardous materials with the NREL researchers.
   a. Substantiation:
      1) Submit a list of all hazardous materials, as well as quantities, located in the laboratory. Provide all necessary building previsions to support the hazardous materials in the lab and facility in general.

D. Operation and Maintenance:

1. Substantiation:
   a. Provide functional testing of all process utility systems. Provide start-up reports and commissioning of mechanical and electrical utilities and Research equipment.
   b. Provide test and balance report included in the operation and maintenance manual.

END OF SECTION D99X

SECTION D99Y
HIGH PRESSURE TEST LABORATORY

PERFORMANCE

A. Basic Function:

1. The information contained herein is intended to compliment the program requirements and laboratory equipment list to identify and elaborate on unique requirements of the laboratory. Refer to other performance specifications and Section D Services for Mechanical, Electrical, Plumbing and Low Voltage system performance requirements.

2. The design builder shall utilize load information provided in the equipment list, program and performance specifications for the response to the RFP. After contract award, the design builder shall determine all mechanical and electrical utility loads for equipment and general use in the laboratory by extracting the load information from the NREL Researchers.
   a. Substantiation:
      1) Preliminary Design:
         a) Submit analysis and documentation of all process utility loads. Provide equipment lists summarizing all mechanical and electrical utilities and the associated load, flow rate, voltage, current and utility connections.

B. Amenity and Comfort:

1. Environment
   a. Temperature/Humidity: Standard temperature and humidity ranges per Facility Performance Section III. Maintain temperature setpoint +/- 2°C around high pressure test cells (HPTC).
   b. Light levels:
      1) Provide 20 foot candles average in the space.
      2) Provide 50 foot candles average on the work surfaces.
      3) Provide emergency egress lighting per IBC.

2. Provide the following systems:
   a. Provide 1/2" Nitrogen with (6) valved takeoffs evenly distributed throughout the laboratory. Provide Nitrogen for purge of hydrogen components.
   b. Provide 1/4" Oxygen with (6) valved takeoffs evenly distributed throughout the laboratory.
   c. Provide 1/2" high pressure hydrogen distribution to High Pressure Test Cells.
   d. Eyewash and sink
   e. Normal power requirements
      1) Provide convenience outlets at 10' minimum spacing on walls in non-hazardous areas.
      2) Provide power as required for equipment.
      3) Provide two 208 volt single phase outlets (30 amp).
      4) Provide surface raceway above the counter 24" OC.
   f. Backup power requirements
      1) No backup power outlets required.
   g. Special Fire Alarm
      1) Audible and visual alarms locally from the hydrogen detection system.
   h. Other Alarms
      1) No other alarms required.
   i. Security requirements
      1) No Special Security Requirements.
   j. Overhead Cable tray
      1) Provide Overhead Cable Tray
   k. Phone
      1) Provide one phone line.
   l. Data

1) Provide minimum 5 LAN drops.

m. Provide compressed air connections at all equipment requiring compressed air plus six additional drops spaced evenly throughout the lab. Provide 100 psi at all locations.

C. Health and Safety:

1. High pressure (10,000 psi) hydrogen tanks will be located outdoors. All high pressure testing of components will be inside test cells.

2. Provide Class I, Div 2, Group B will be required for the High Pressure Test Cells.

3. Hydrogen compressor(s) will be located outdoors.

3. Refer to Section 5 – Program for special construction considerations.

5. Provide (1) Flammables storage cabinet, and (1) Gases cabinet.

6. The design builder shall utilize the information given in the performance specifications and program for the types and quantities of hazardous materials located in the laboratory. After contract award, confirm the types and amounts of hazardous materials with the NREL researchers.
   a. Substantiation:
      1) Submit a list of all hazardous materials, as well as quantities, located in the laboratory. Provide all necessary building previsions to support the hazardous materials in the lab and facility in general.

D. Operation and Maintenance:

1. Substantiation:
   a. Provide functional testing of all process utility systems. Provide start-up reports and commissioning of mechanical and electrical utilities and Research equipment.
   b. Provide test and balance report included in the operation and maintenance manual.

END OF SECTION D99Y

SECTION D99Z
PEC LABORATORY

PERFORMANCE

A. Basic Function: Photo Electrical Chemical (PEC) Lab

1. The information contained herein is intended to compliment the program requirements and laboratory equipment list to identify and elaborate on unique requirements of the laboratory. Refer to other performance specifications and Section D Services for Mechanical, Electrical, Plumbing and Low Voltage system performance requirements.

2. The design builder shall utilize load information provided in the equipment list, program and performance specifications for the response to the RFP. After contract award, the design builder shall determine all mechanical and electrical utility loads for equipment and general use in the laboratory by extracting the load information from the NREL Researchers.
   a. Substantiation:
      1) Preliminary Design:
         a) Submit analysis and documentation of all process utility loads. Provide equipment lists summarizing all mechanical and electrical utilities and the associated load, flow rate, voltage, current and utility connections.

B. Amenity and Comfort:

1. Environment
   a. Temperature/Humidity: Standard temperature and humidity ranges per Facility Performance Section III.
   b. Light levels:
      1) Provide directional control of lighting at workstations.
      2) Provide 20 footcandles average in the space.
      3) Provide 50 footcandles average on the work surfaces.
   c. Provide the following systems:
      1) Provide four (4) locations at benches for exhaust system spot ventilation. Exhaust connections shall be 6" with seal-tight balancing dampers.
      2) Provide four (4) fume hoods as listed on the equipment list. Fume hoods shall be fitted with HEPA filtration capability in case of future nano-material use.
      3) Provide 1/2" Nitrogen evenly distributed with (6) valved takeoffs.
      4) ½" De-Ionized Water - 18 Mohms
      5) Provide ¼" house Hydrogen gas
      6) Eyewash
      7) Six (6) sinks total - two (2) with hot/cold water located by egress door.
   d. Normal power requirements
      1) Provide power at 10' minimum spacing on walls
      2) Provide power as required for equipment.
   e. Backup power requirements
      1) No backup power outlets required.
   f. Special Fire Alarm
      1) No Special Fire Alarm Requirements.
   g. Other Alarms
      1) Provide audible and visual alarms for hydrogen monitoring system.
   h. Security requirements
      1) No Special Security Requirements.
   i. Overhead Cable tray
   j. Phone
      1) Provide three phone lines - one in smaller room and two in the larger room.

k. Data
   1) Provide minimum 12 LAN drops. If wireless connection is available this could be reduced to six.

l. Provide gas monitoring and general laboratory ventilation.

m. Provide compressed air connections at all equipment requiring compressed air plus six additional drop spaced evenly throughout the lab. Provide 100 psi at all locations.

C. Health and Safety:

1. Provide (1) corrosive storage cabinet.

2. Provide (1) flammable storage cabinet.

3. 10 gallons of corrosives (inorganic aqeous acids and bases)

4. 4 gallons of flammables (organic solvents)

5. The design builder shall utilize the information given in the performance specifications and program for the types and quantities of hazardous materials located in the laboratory. After contract award, confirm the types and amounts of hazardous materials with the NREL researchers.

6. Substantiation:
   a. Submit a list of all hazardous materials, as well as quantities, located in the laboratory. Provide all necessary building previsions to support the hazardous materials in the lab and facility in general.

D. Operation and Maintenance:

1. Substantiation:
   a. Provide functional testing of all process utility systems. Provide start-up reports and commissioning of mechanical and electrical utilities and Research equipment.
   b. Provide test and balance report included in the operation and maintenance manual.

END OF SECTION D99Z

SECTION D99AA
FUELS QUALITY LABORATORY

PERFORMANCE

A. Basic Function:

1. The information contained herein is intended to compliment the program requirements and laboratory equipment list to identify and elaborate on unique requirements of the laboratory. Refer to other performance specifications and Section D Services for Mechanical, Electrical, Plumbing and Low Voltage system performance requirements.

2. The design builder shall utilize load information provided in the equipment list, program and performance specifications for the response to the RFP. After contract award, the design builder shall determine all mechanical and electrical utility loads for equipment and general use in the laboratory by extracting the load information from the NREL Researchers.
   a. Substantiation:
      1) Preliminary Design:
         a) Submit analysis and documentation of all process utility loads. Provide equipment lists summarizing all mechanical and electrical utilities and the associated load, flow rate, voltage, current and utility connections.

B. Amenity and Comfort:

1. Temperature/Humidity: Standard temperature and humidity ranges per Facility Performance Section III. Maintain space temperature ±2° F. Manual override of night setback temperatures shall be provided.
   a. Substantiation:
      1) Construction Administration: Measurement and recording of temperature and humidity shall be documented and reviewed with NREL and design team.

2. Provide the following systems:
   a. Provide two separate piped Hydrogen systems. One shall be from the bottle system and one from Hydrogen generated on site.
   b. Provide two (2) fume hoods as listed on the equipment list. Fume hoods shall be fitted with HEPA filtration capability in case of future nano-material use.
   c. Provide ventilation for flammable storage cabinets and gas cabinets per ESJH requirements.
   d. Provide 1 1/2" process cooling water evenly distributed throughout the laboratory with (4) valved takeoffs.
   e. Provide 18 Mohm DI water.
   f. Provide a minimum of two exhaust locations over work benches for connection of snorkel systems.
   g. Provide 3/4" Nitrogen and compressed air evenly distributed throughout the laboratory with (4) valved takeoffs.
   h. Provide ¼" Argon distribution from the bottle storage and regulator located in the service corridor. Extend piping to work benches.
   i. Provide general laboratory exhaust.
   j. Provide gas monitoring and alarm systems.
   k. Provide utility normal power and backup power to each workstation. Provide power in multichannel wiremold with normal power outlets every 24 inches on center and backup power outlets every 5 ft on center. Provide minimum two 208 volt single phase outlets for general purpose power in the area.
   l. Provide power for all equipment as listed in the equipment list.
   m. Provide minimum two LAN drops.
   o. Provide compressed air connections at all equipment requiring compressed air plus six additional drops spaced evenly throughout the lab. Provide 100 psi at all locations.

C. Health and Safety:

1. Provide eyewash and emergency shower.

2. Provide (2) corrosive storage, (2) flammable storage, and (4) gas storage cabinets. Quantities are anticipated to be less than code maximum allowable quantities.
   a. Corrosives: Acids and bases (liquids)
   b. Cryogenics: N_2 (liquid)
   c. Flammables: Solvents (liquid) and H_2 (gas)
   d. Toxics: Solvents (liquid), CO and H_2S (gases)
   e. Oxidizers: O_2 and H_2O_2 (gases)

3. The design builder shall utilize the information given in the performance specifications and program for the types and quantities of hazardous materials located in the laboratory. After contract award, confirm the types and amounts of hazardous materials with the NREL researchers.
   a. Substantiation:
      1) Submit a list of all hazardous materials, as well as quantities, located in the laboratory. Provide all necessary building previsions to support the hazardous materials in the lab and facility in general.

D. Operation and Maintenance:

1. Substantiation:
   a. Provide functional testing of all process utility systems. Provide start-up reports and commissioning of mechanical and electrical utilities and Research equipment.
   b. Provide test and balance report included in the operation and maintenance manual.

END OF SECTION D99AA

SECTION E
EQUIPMENT AND FURNISHINGS

PERFORMANCE

A. Basic Function:

1. Accommodate the equipment and furnishings required by NREL, which are specified in the project program. Research equipment will be provided under an allowance and is not included in this Section "E", but is listed in the project program.

2. Equipment and furnishings comprise the following elements:
   a. Equipment (E1): Mechanized, plumbed, and electrical devices, other than equipment that is part of a service system (HVAC, electrical, etc.), and permanently installed fixtures not covered by another Section.
   b. Furnishings (E2): Movable (loose) furniture and fittings, without electrical or plumbing connections.

3. All specified equipment and furnishings will be provided by the Subcontractor. Research equipment will be provided as part of an FFE allowance established by NREL. Specific list of equipment included in this allowance is included in the project program.

4. Where equipment or furnishings elements also must function as elements defined within another element group, meet requirements of both element groups.

5. In addition to the requirements of this section, the construction will comply with all applicable requirements of Section 111 - Facility Performance.

B. Amenity and Comfort:

1. Appearance:
   a. Services Connections to Equipment: Concealed behind or under items or their housings.

C. Health and Safety:

1. Accident Prevention:
   a. Comply will the requirements of 29 CFR 1910, regulations of Occupational Safety and Health Administration.
   b. Prevent accidental pinching, crushing, and cutting of operator limbs, fingers, and toes in or by moving parts of equipment by using intelligent design or guards or other protection, without reliance on self-protective operation by operator.
2. Comply with U.L. and NRTL research equipment requirements when applicable.

D. Durability:

1. Service Life Span: Same as for building.
   a. Substantiation:
      1) Preliminary Design: Identification of proven-in-use assemblies of the same type, for inspection by NREL.
      2) Design Development: Identification of actual products to be used.

2. Weather Resistance: Items located outdoors will comply with requirements of Section B.

3. Vandal Resistance: Parts not easily removed without the use of tools.

E. Operation and Maintenance:

1. Ease of Maintenance: Not requiring any routine measures to maintain operation or finishes, other than washing with soap and water.

2. Ease of Repair: Serviceable parts and access panels easily removable with common tools.

3. Ease of Equipment Service: As specified in Section 111 and the following:
   a. Rooftop Equipment: Of type that is serviceable by relatively quick replacement of parts, minimizing time required on roof, and eliminating need to perform repair work in the weather.
   b. Parts Having Service Life Less Than That Specified for Element: Easily replaceable, without de-installation or de-mounting of the entire element, component, or equipment item.
   c. Valves: Easily replaceable internal parts, eliminating necessity of removal of entire valve for repair.
   d. Parts: Readily available from stocking distributors within 50 miles (80 km) of project location.

END OF SECTION E

SECTION E1
EQUIPMENT

PERFORMANCE

A. Basic Function:

1. Provide equipment as specified in Section E.
2. Equipment comprises the following elements:
   a. General Equipment (E11): Equipment that would be found in buildings of any type of occupancy, including loading dock equipment.
3. Where equipment elements also must function as elements defined within another element group, meet requirements of both element groups.
4. In addition to the requirements of this section, the construction will comply with all applicable requirements of Section 111 - Facility Performance and Section E.

B. Amenity and Comfort:

1. Convenience:
   a. Electrical Convenience Outlets for Movable Equipment:
      1) Floor-Mounted Equipment: Within 5 feet (1500 mm) of cord connection to equipment housing.
      2) Counter-Mounted Equipment: Within 2 feet (600 mm) of cord connection to equipment housing.
      3) Ceiling-Mounted Equipment: Within 2 feet (600 mm) of cord connection to equipment housing.
      4) Equipment Intended to be Operated in More Than One Location: Equivalent convenience outlets in each location.

C. Durability:

1. Service Life Span: Same as for building.
   a. Substantiation:
      1) Preliminary Design: Identification of proven-in-use assemblies of the same type, for inspection by NREL.
      2) Design Development: Identification of actual products to be used.

END OF SECTION E1

SECTION E11
GENERAL EQUIPMENT

PERFORMANCE

A. Basic Function:

1. Provide general building equipment of the type and in the quantity required by the program and in accordance with the code.

2. General equipment comprises the following elements:
   a. Loading dock equipment, including bumpers, levelers, seals, and shelters.
   b. Solid waste disposal and handling equipment, including compactors, dumpsters, bins, and waste receptacles.
   c. Anchorage equipment for working on roofs.
   d. Fume hoods.
   e. Audio-visual equipment.
   f. Kitchen and break room appliances.

3. Loading Docks: Goods movement will be primarily unloading.
   a. Provide not less than 2 loading bays with levelers and bumpers of size required to suit application. Provide a 3rd bay for a ramp that can be used for fork lift access from pavement level to dock level.
   b. Types of trucks to be accommodated include pick-up trucks, step vans, tractor-trailers (semis).
   c. Each bay must accommodate the full range of required truck sizes.
   d. Loading and unloading will be accomplished by NREL's personnel using hand carts, four-wheeled carts, manual pallet jacks, powered pallet jacks, straddle stackers, and sit-down rider fork trucks.
   e. Within loading dock, provide for a material storage area for palleted equipment to be stored and positioned using forklift. Provide both an indoor receiving area as well as an outdoor enclosed non-conditioned space accessible by fork lift
   f. Provide levellers with capacity not less than 40,000 lbs.

4. Solid Waste Disposal: Provide for efficient removal of waste from the building while minimizing both the amount of labor required to do so and the cost of disposal.
   a. NREL's personnel will transfer waste to temporary waste collection areas.
   b. NREL will engage a refuse collection service to remove solid waste from temporary waste collection areas.
   c. NREL requires that waste be compacted as much as possible, to reduce the waste volume.
   d. Temporary Waste Collection Areas: Storage space for waste waiting for pick-up by refuse collection service. Provide one bay in dock area to accommodate a 30 c.y. roll off dumpster.
      1) Capacity: Not less than that required allowing pickup only one time per week by one truck on a regular route; if compaction is used and multiple containers are required to achieve capacity, manual shifting of filled containers is acceptable.
   e. Waste Collection:
      1) Provide waste containers (96 gal capacity), unless otherwise indicated.
      2) Waste Receptacles: One in each room or space, typically a waste basket.
         a) Movable Receptacles: Furnished by NREL, unless otherwise indicated.
         b) Fixed Receptacles: Furnished by Subcontractor, at following locations:
            (1) As indicated in Section C24.

5. Roof Worker Safety: The construction will provide fixed equipment required by code for worker safety on roofs and other elevated areas, complying with ANSI Z359.1-2007; coordinate with roof design specified in Section B3.

6. Audio-Visual Equipment shall include:
   a. LCD/Plasma monitor display (large) in lobby area.
   b. Smart board, white board, LCD projector (ceiling mounted) and project screen in all conference

rooms.
c. LCD/plasma monitor in all viewing alcoves.
d. Smart boards with projection capability in all interaction areas.
e. LCD/Plasma monitor, amplifier, and speakers in lunch/break room.

7. Copy/ Print rooms shall contain built-in mail slots.

8. Kitchen and break room equipment shall include:
   a. Break Room: Sink, disposal, dishwasher, refrigerator with ice maker, filtered water dispenser.
   b. Coffee Kitchen: Bar sink, coffee machine, microwave open, disposal, refrigerator with ice maker, towel and soap dispenser.

9. Where general equipment elements also must function as elements defined within another element group, meet requirements of both element groups.

10. In addition to the requirements of this section, the construction will comply with all applicable requirements of Section 111 - Facility Performance, Section E, and Section E1.

B. Amenity and Comfort:

1. Comfort:
   a. Loading Docks: Provide weather enclosure whenever a truck is parked in a loading bay.

2. Convenience:
   a. Dock equipment for changing levels permanently installed.
   b. Solid Waste: Travel distance to waste collection area of not more than 300 feet (91 m) maximum, including vertical travel required by person performing the collection.
   c. Refuse Collection Service Access: Vehicular access to temporary collection area sufficient to accommodate trucks of size required.
   d. Horizontal Transport of Waste: Manual, by means of rolling bins.
   e. Vertical Transport of Waste: Provide facilities that eliminate need to carry waste up or down.

C. Health and Safety:

1. Accident Prevention:
   a. Loading Docks:
      1) Allow movement of goods and goods-handling equipment from the interior of trucks to loading dock surface and vice versa without manual lifting or traversing a slope greater than 1:20.
      2) Prevent accidental movement of trucks away from docks.
      3) Prevent accidents due to changing of levels of lifts or levelers.
      4) Dock Levelers: Provide equipment complying with safety requirements of ANSI MH30.1-1993.
      5) Dock Lifts: Provide equipment complying with safety requirements of ANSI MH29.1-2003.

D. Durability:

1. Service Life Span: Same as for building.
   a. Substantiation:
      1) Preliminary Design: Identification of proven-in-use assemblies of the same type, for inspection by NREL.
      2) Design Development: Identification of actual products to be used.

2. Impact Resistance:
   a. Loading Docks: Prevent accidental damage to building elements caused by trucks backing up to loading dock.

E. Operation and Maintenance:

1. Capacity:
   a. Loading Dock Levelers and Lifts: As required for loading conditions, with minimum 20 percent extra capacity based on manufacturer's rating.

2. Ease of Operation:
   a. Dock Lifts and Levelers: Easily adjusted without the use of tools.

3. Ease of Maintenance: Not requiring any routine measures to maintain operation or finishes, other than washing with soap and water.

END OF SECTION E11

SECTION E2
FURNISHINGS

PERFORMANCE

A. Basic Function:

1. Furnishings comprise the following elements:
   a. Commercial Furnishings: Loose furnishings for commercial functions, principally office, including furniture and accessories.

END OF SECTION E2

SECTION E23
SYSTEMS FURNISHINGS

PERFORMANCE

A. Basic Function: Systems furniture shall form the basis for all occupant work stations throughout the facility. Systems furniture includes wall panels, work surfaces, shelving, cabinets, task lighting, accessories, and seating. See Section 9.10 For NREL furniture product cut sheets, provide these or equal

B. Systems furniture shall be provided for the 9 following areas:

1. WS-36: Double work module, standard size.
2. WS-72: Double work module, standard size.
3. WS-72 Reception: Standard area reception module.
4. WS-120: Double work module, large.
5. PO-120: Private office, single occupant with two Jersey side chairs.
6. PO-240: Private office, single occupant, manager, with two Jersey side chairs, conference table, and four Jersey chairs.
7. Break room.
8. Conference room.
9. Huddle room.

B. Each work station shall include a portable box/box file cabinet.

1. Work station occupant chair shall not be included, and will be provided by NREL.

C. Each break room shall include a Turnstone Table, 54 inch round with six Fetch sled chairs.

D. Each conference room shall include a multiple Turnstone Fixed Top Tables (quantity appropriate to room size, a Turnstone Currency double door credenza, power module, and one Jersey chair for each 30 inches of table edge.

E. Each huddle room shall include a Turnstone Currency conference table, Turnstone Groupworks Telephone-Media Table, power module, and six Jersey chairs.

F. Each interaction area shall have lounge seating, moveable tables, and chairs.

G. For electrical load calculations, assume no more than two cubicles per 20A circuit.

H. Keyboard Trays: Provide curved (EDI T116 R/L) and straight (EDI T104). Both models require a Cobra Arm Mechanism Z110#53. For purposes of this RFP assume 50% straight and 50% curved.

I. Refer to Section 9.10 isometric sketches for specific layouts.

PRODUCTS

A. Provide the following products:
   1. Steelcase by Workplace or approved equal, for all systems furniture to be consistent with NREL campus standards and standard GSA finishes. Refer to attached layouts.
   2. All products must meet minimum standards of ANSI/HFS 100 - Human Factors Engineering Visual Display Terminal Workstations.

B. The construction will not use:
   1. Custom fabrics.

END OF SECTION E23

SECTION E29
OTHER FURNISHINGS

PERFORMANCE

A. Basic Function: Provide exterior furnishings as indicated;

1. Bike rack and waste receptacle at main entrance.
2. Tables, chairs, and waste receptacles at outdoor patio areas.

B. Durability: Provide exterior furnishings of durable materials (powder coated steel, galvanized steel, stainless steel, etc).

PRODUCTS

A. The construction will not use:

1. Furnishings constructed of wood.

END OF SECTION E29

SECTION G
SITEWORK

PERFORMANCE

A. Basic Function:

1. Provide all modifications to the site and site improvements and utilities required for proper functioning of the project and as indicated in the project program.

2. Sitework comprises the following elements:
   a. Site Preparation (G1): All modifications to the site and grades required for construction of new work and for proper functioning of the project.
   b. Site Improvements (G2): All elements required to provide finished and durable site surfaces, indoor plantings, and outdoor improvements described in the project program.
   c. Site Services (G3): All outdoor and underground elements required to complete the design of services defined in Volume D - Services. Work includes connection of the building to the appropriate site utility.
   d. Other Site Construction: Miscellaneous site elements.

3. Where site elements also must function as elements defined within another element group, meet the requirements of both element groups.

4. In addition to the requirements of this section, the construction will comply with all applicable requirements of Section 111 - Facility Performance.

5. Cultural Resources:
   a. In the event potential archeological items are unearthed or discovered during construction, work in the area must stop. NREL will make a determination within 24 to 48 hrs if work can continue
   b. Potential archeological items may not be moved or stockpiled upon discovery

B. Amenity and Comfort:

1. Heat/Cold: The construction will minimize heat gain in summer and maximize heat gain in winter.

2. Wind: Shield entrances from wind in all seasons.

3. Cleanliness: Provide above grade elements, fixtures, and equipment that:
   a. Prevent attraction and adherence of dust and air-borne dirt and soot, and minimize appearance of settled dust and dirt.

4. Comfort:
   a. Provide outdoor seating as described in the project program and as follows:
      1) See Section C25 for performance requirements.
      2) Quantity:
         a) 5 tables with attached seating for 4 at each table.

5. Appearance:
   a. Fit the new activities on site to the topography, soils, and existing vegetation as much as possible.
   b. Finished Surfaces:
      1) Finished surfaces will be smooth and uniform in appearance, without depressions that collect water.
      2) The construction will not leave soil surfaces exposed in finished work; the construction will minimize the amount of time soil surfaces are left exposed.
      3) If, after consideration of other performance requirements, options remain as to methods of finishing soil surfaces, NREL prefers:
         a) Landscaping, rather than paving.
         b) Perennial shrubbery and ground covers, rather than lawns.

c) Water-pervious paving, such as unit pavers on pervious bed, rather than monolithic pavement.

c. Conceal unsightly site elements from view from the street.

d. Conceal the following from view from the remainder of the site:

1) Trash collection and storage areas.

2) Utility yards.

e. Substantiation:

1) Design Development: Site plans showing methods of achieving appearance requirements; renderings or sketches showing principal views described in requirements.

C. Health and Safety:

1. Safety:

a. Inhibit:

1) The intentional driving of vehicles from adjacent public rights-of-way onto the site, except at intended roadway accesses.

2) The intentional driving of vehicles from roadways and parking areas onto pedestrian walkways and planted areas.

2. Maximum Slopes:

a. Slopes with Smooth Pavement: 1:10, unless restricted to vehicular use.

b. Slopes Covered with Grass: 1:5, unless less than 3 feet (1 m) in height.

c. Slopes with Pedestrian-Inhibiting Vegetation: 1:1, unless less than 5 feet (1.5 m) in height.

d. Slopes With No Access From Top: Limited only by structural stability and resistance to erosion.

3. Physical Security:

a. Provide fixed mountings for securing of bicycles against theft.

1) Bicycle NREL to provide lock and chain.

4. Vehicular Safety: Comply with the code.

a. Provide visual barriers at extreme changes in elevation near roadways.

b. Provide tactile warnings where pedestrian walkways cross or run adjacent to roadways.

D. Structure:

1. Earthwork: Structural design will in accordance with ASCE 7-2005 if not otherwise required by code.

a. Bearing Capacity: Under substructure, paving, and site structural elements, maintain natural bearing capacity or achieve or correct compaction as required to prevent uncontrolled subsidence or other movement.

b. Substantiation:

1) Design Development: Engineering design of any structural fills required.

2. Site Fixtures, Equipment, and Services:

a. Provide foundations or other mountings as required to support the completed and operational element permanently and safely and without uncontrolled subsidence or other movement.

b. Structural elements will be designed in accordance with code and requirements specified in Section B.

c. Miscellaneous Site Structures with Floors or Roofs: Designed to comply with same requirements as building superstructure.

d. Substantiation: Same as required for superstructure.

E. Durability:

1. Weather Resistance of Built Elements: The construction will comply with requirements of Section B.

2. Weather Resistance of Plants and Turf: Plants used will withstand extremes of weather likely to occur in any 5 years without supplementary irrigation and without seasonal protection other than mulch.

a. NREL agrees that maintenance to the level specified by the Subcontractor will be necessary to

assure survival of the plants.

b. Exception: Supplementary irrigation is expected during new plant establishment period.

3. Soil Erosion Resistance: Comply with the code and the following:
   a. Maintain the existing site features that contribute to erosion resistance to the greatest extent possible.
   b. The present natural resistance to erosion is insufficient; measures will be taken to improve the resistance to erosion.
   c. The construction will include measures to minimize soil erosion.
   d. If erosion occurs during construction and within one year after completion, relocation or replacement of eroded soil and repair of eroded areas will be performed by the Subcontractor at no cost to NREL.
   e. If erosion occurs within one year after completion, improved erosion control measures will be provided within one week after notification by NREL.

4. Traffic Resistance: Provide finished site surfaces that are permanently resistant to the type of traffic to be expected, under all weather conditions.
   a. Where vegetated surfaces will not withstand the anticipated traffic, provide pavement or other surfacing.
   b. If vegetated surfaces are damaged due to traffic within one year after completion, replacement of vegetation with more durable materials will be performed by the Subcontractor at no cost to NREL.
   c. Vegetation and fencing will be used to discourage pedestrian traffic, if other functional requirements can be met.
   d. Substantiation, Paving and Hard Surfacing:
      1) Preliminary Design: Identification of types and thicknesses of paving and surfacing for various functions.
      2) Design Development: Proven-in-use documentation of paving and surfacing consistent with types of traffic anticipated; manufacturer's data may be submitted for modular paving units.
      3) Construction Documents: Engineering calculations, based on anticipated weights and intensity of traffic.

5. Flooding:
   a. Storm water runoff will be controlled as required to prevent damage to project elements, including vegetation, and to prevent damage to neighboring sites, including vegetation.
   b. Prevent storm water runoff into public utilities in excess of actual capacity or amount allowed by public agencies, whichever is less, under conditions of the most extreme rainfall that might occur in 50 years.
   c. Substantiation:
      1) Design Development: Engineering design of site drainage, including drainage volume calculations.

6. Vehicular Collision: Minimize the probability of vehicular impact on site fixtures and accidental driving on lawns and landscaped areas.

F. Operation and Maintenance:

1. Utilities: See Section D and other applicable chapters in Volume D for design parameters.

2. Water Conservation: Minimize water use; see Section G23 for method of determining acceptable level of water use.
   a. Substantiation:
      1) Design Development: Irrigation system design for required plant materials; estimated water use, by season and by year; explanation of conservation measures.
      2) Construction Documents: Calculated water use based on final design and irrigation schedule.

3) Commissioning: Field verification.

3. Ease of Maintenance:
   a. Snow Removal: Facilitate removal and storage of snow from vehicular and pedestrian traffic ways using mechanized equipment or automatic means wherever possible; where not possible, the construction will minimize the effort required to use manual snow removal methods.

4. Substantiation:
   a. Design Development: Identification of vehicular and pedestrian traffic surfaces and anticipated methods of snow removal.

END OF SECTION G

SECTION G1
SITE PREPARATION

PERFORMANCE

A. Basic Function:

1. Provide all modifications to the site required for proper functioning of the project and as indicated in the program.

2. Site preparation is comprised of the following elements:
   a. Clearing (G11): Removal of trash, existing built elements, and vegetation that is not needed, and temporary erosion control.
   b. Earthwork (G12): Changing of grade levels, removal of soil and rock, modifying existing soils in preparation for construction, and temporary and permanent erosion and sediment control structures made of soil or rock.

3. Where site preparation elements also must function as elements defined within another element group, meet the requirements of both element groups.

4. In addition to the requirements of this section, the construction will comply with all applicable requirements of Section 111 - Facility Performance and Section G - Sitework.

B. Durability:

1. Soil Erosion Resistance: As specified in Section G and as follows:
   a. During construction, all necessary measures will be taken to minimize the amount of eroded soil that is transported off the site or into waterways under the most extreme short term and 24-hour rainfall events that might occur in 25 years.
   b. In the design and constructed elements, all necessary measures will be taken to minimize soil erosion under the most extreme short term and 24-hour rainfall events that might occur in 25 years, and to prevent eroded soil from being transported off the site or into waterways.
   c. Erosion control measures will be designed in accordance with "Best Management Practices (BMPs)" and design procedures prescribed by law as well as special NREL procedures indicated in Section 8.
   d. Limit continuous slopes to maximum of 30 feet (10 m) measured vertically, unless intermediate terraces with drainage swales are provided.
   e. Temporary measures will be replaced with permanent measures unless made unnecessary by constructed site elements, final topography, or permanent vegetation.

C. Operation and Maintenance:

1. Ease of Maintenance:
   a. Earthwork elements will be designed and constructed so that they are permanent, not requiring periodic maintenance to maintain stability or appearance.

D. Wildlife Survey:

1. In compliance with the Migratory Bird Treaty Act, NREL's ESH&Q must conduct a survey for ground nesting birds during the breeding/nesting season (April through October) prior to any activities or ground disturbance. Activities that occur outside the breeding/nesting season do not require coordination with NREL's ESH&Q regarding bird surveys. The following guidelines are provided:
   a. Breeding/Nesting Season: April 15 through September 30
   b. Activities Requiring Bird Nesting Surveys:
      1) Driving
      2) Mowing
      3) Drilling
      4) Tree cutting

5) Weed Spraying
6) Construction-related activities

c. Notify NREL's ESH&Q
   1) Two weeks prior to planned activities a request for a bird nesting survey is to be initiated.
   2) Contact Brenda Beatty or Bob Fiehweg of NREL's ESH&Q Office.

d. Bird Nesting Surveys:
   1) NREL's ESH&Q will complete the nesting survey within one week of planned activity. The survey is valid seven days. If the planned activity cannot be completed within seven days, a re-survey is required.

e. What if an active nest is found?
   1) A buffer area around the nest will be flagged by NREL's ESH&Q, and no activity can occur within the buffer zone until young have fledged.

f. Note: Walking in ground-nesting habitat is permitted. If a bird is spotted flying from the ground, avoid the area by 20 feet, as a nest may be occupied or under construction.

END OF SECTION G1

SECTION G11
CLEARING

PERFORMANCE

A. Basic Function:

1. In addition to the requirements of this section, the construction will comply with all applicable requirements of Section 111 - Facility Performance, Section G - Sitework, and Section G1 - Site Preparation.

B. Durability:

1. Erosion Resistance: As specified in Section G and as follows:
   a. Timing of Clearing: To leave soils exposed for as short time as possible; removal of sod last.
   b. Sediment barriers and traps will be constructed wherever run-off will leave the property and wherever significant erosion will occur on the property.
   c. Temporary vehicular structures will be constructed wherever construction equipment will have to cross flowing watercourses, to protect stream banks and beds.
   d. Temporary construction exit will be constructed wherever construction equipment will have to enter the site from public roads, to prevent transportation of soil onto roads.

END OF SECTION G11

SECTION G12
EARTHWORK

PERFORMANCE

A. Basic Function:

1. Site grades and soils will be modified as required for construction of buildings and utilities, for proper functioning of the project, and as indicated in the project program.

2. Principal finished site earthwork elements that will be required include:
   a. Roadways.
   b. Parking lots.
   c. Retaining walls.
   d. Vegetated storm water conveyance channels.
   e. Permanent erosion control structures as required.

3. Where earthwork elements also must function as elements defined within another element group, meet the requirements of both element groups.

4. In addition to the requirements of this section, comply with all applicable requirements of Section 111 - Facility Performance, Section G - Sitework, and Section G1 - Site Preparation.

B. Structure:

1. Retaining Walls: Retaining walls will be designed to permanently resist soil and water pressure as well as live loads.
   a. Substantiation:
      1) Design Development: Engineering design and estimate of longevity.

C. Durability:

1. Erosion Resistance: As specified in Sections G and G1 and as follows:
   a. Permanent erosion control structures will be provided wherever permanent vegetation will not prevent erosion or sediment loss.
   b. Whenever grades are changed, vegetative stabilization will be provided immediately, to be maintained until final grades are stabilized with permanent vegetation.

D. Operation and Maintenance:

1. Ease of Maintenance:
   a. The construction will not use invasive or competitive plants for temporary cover crops.

END OF SECTION G12

SECTION G2
SITE IMPROVEMENTS

PERFORMANCE

A. Basic Function:

1. Provide all elements required for finished and durable site surfaces, indoor plantings, and outdoor improvements described in the project program.

2. Site improvements comprise the following elements:
   a. Pavements and Surfacing (G21): Finished surfaces for vehicular, pedestrian, and sports and recreational traffic, other than turf.
   b. Site Fixtures and Equipment (G22): Fixtures, equipment, and miscellaneous structures located out-of-doors, except those located on the roof or mounted on walls of buildings.
   c. Landscaping (G23): Outdoor plants and elements supporting plants.

3. Where site improvements elements also must function as elements defined within another element group, the construction will meet the requirements of both element groups.

4. In addition to the requirements of this section, the construction will comply with all applicable requirements of Section 111 - Facility Performance and Section G - Sitework.

B. Appearance:

1. Plants:
   a. Outdoor: Provide an attractively landscaped site that looks tidy during non-growing seasons.
   b. Substantiation:
      1) Design Development: Identification of types of plants to be used, with any seasonal variations in appearance.

2. Pavements and Surfacing: Provide rigid surfaces that are smooth, consistent in color and finish, sloped and drained to avoid ponding, and neatly finished at edges.
   a. Vehicular Areas: Marked neatly to denote traffic lanes and parking spaces.
   b. Pedestrian Areas: Designed to contrast visually with vehicular areas.

C. Durability:

1. Weather Resistance of Plants: Provide a concealed irrigation system for all plantings that are not required to survive normal weather extremes without supplementary irrigation.

2. Pavements and Surfacing: Provide systems that are designed and engineered to withstand the types and intensity of traffic anticipated for the facility size and type.

PRODUCTS

A. Pavements and Surfacing:
   1. Use one of the following:
      a. Rigid paving at curbs, gutters, walks.
      b. Flexible paving throughout project.
      c. Modular pavers at accent area.

END OF SECTION G2

SECTION G21
PAVEMENTS AND SURFACING

PERFORMANCE

A. Basic Function:

1. Provide exterior pavements and surfacing, as required by the project program and by code, that are adequate in extent and sufficiently durable to accommodate without damage the types of traffic that can be reasonably anticipated for the facility type and intended user population.

2. Pavements and surfacing comprise the following elements:
   a. Exterior paved or surfaced areas such as roadways, driveways, parking lots, and walkways.
   b. Exterior steps and ramps not connected to buildings, including handrails and stair nosings.
   c. Appurtenances for roadways and driveways, including curbs, gutters, guardrails, pavement markings, and parking bumpers.
   d. Signs, including traffic signals, "stop," "yield, and directional signs, and parking space marking and identification.

3. Roadways and Driveways: Provide paved surfaces as required for vehicular access to the project site and to various functional areas requiring vehicular access, including main entrance, parking areas, freight docks, loading and unloading zones, and drive-up service windows.
   a. Comply with recommendations of AASHTO "A Policy on Geometric Design of Highways and Streets", 2004.
   b. Minimum Widths: Traffic lanes not less than 11 ft (3.35 m) wide.
   c. Maximum Slopes: 1:10.
   d. Curbs: Minimum 4 inch (100 mm) mountable curbs at all roadways and driveways.
   e. Gutters: Minimum 12 in (0.3 m) width, designed in accordance with AASHTO recommendations, located on one side of all roadways and driveways.
   f. Traffic Lanes and Directional Markings: Permanent and highly visible, minimum width of 4 in (100 mm).

4. Parking Areas: The construction will provide paved surfaces as required for vehicular parking.
   a. Minimum Width of Parking Spaces: 96 in (2.44 m).
   b. Space Markings: Permanent and highly visible, minimum width of 4 in (100 mm).
   c. Parking Signage: As required by code and project program.

5. Walkways, Pedestrian Ramps, and Exterior Stairs: Provide paved surfaces as required for pedestrian movement on the site without damage to landscaping. Connect building to nearest adjacent buildings.
   a. Minimum Widths: Sized to allow comfortable two-way traffic.
      1) Main Entrance: 72 in (1830 mm).
      2) Major Routes: 60 in (1525 mm).
      3) Secondary Routes: 48 in (1220 mm).
   b. Handrails, Railings, or Protective Walls: Required when pedestrian surfaces are more than 12 in (300 mm) above adjacent grade.

6. Where pavements and surfacing are integral with elements defined within another element group, meet requirements of both element groups.

7. In addition to the requirements of this section, comply with all applicable requirements of Section 111 - Facility Performance, Section G - Sitework and Section G2 - Site Improvements.

B. Amenity and Comfort:

1. Thermal Comfort: Provide pavements and surfacing at parking lots with minimum initial reflectivity of 0.3 to reduce solar heat gain.

2. Accessibility:

a. Comply with ADAAG-1994.
b. Parking: Provide not less than 1 accessible parking space in addition to the number required under ADAAG-1994 in each parking area.
c. Van Accessibility: Provide not less than 1 van accessible parking space in addition to the number required under ADAAG-1994 in each parking area.
d. Pedestrian Ramps: Limit slope to maximum of 1:16 and rise to maximum of 24 in (610 mm) in any run.

3. Stair Comfort:
   a. Steepness: Provide exterior stairs with risers of not more than 6.5 inches (165 mm) and treads sized so that twice the riser height plus the tread depth totals 24 to 25 inches (610 to 635 mm).
   b. Landings: Provide exterior stairs with maximum rise of not more than 8 ft (2.5 m) between landings.

4. Noise Control: Provide paving at parking lots, roadways, and driveways that minimizes noise from automobile tires due to rough surface texture and paving joints.

5. Ramp Comfort:
   a. Pedestrian Ramps: The construction will limit slope to maximum of 1:16 and rise to maximum of 24 in (610 mm) in any run.
   b. Landings: The construction will provide ramps with landings of not less than 8 ft (2.5 m) in length.

6. Appearance:
   a. Vehicular Paving: Paving will be constructed to achieve plain, utilitarian appearance.
   b. Pedestrian Stairs: Provide pedestrian walking surfaces that contrast with vehicular paving and achieve detailed, decorative appearance.
   c. Curbs and Gutters: The construction will provide smooth, rounded shapes that contrast with roadway, and walkway surfaces for maximum visibility.
   d. Railings, Handrails, Guardrails, and Protective Walls: The construction will provide materials and finishes that are consistent with building exterior in appearance.

C. Health and Safety:

1. Safety of Pedestrian Surfaces:
   a. Slip Resistance: Provide walking surfaces of exterior stairs, ramps, and walkways with a minimum static coefficient of friction of 0.80, measured in accordance with ASTM D 2047-2004.
   b. Stairs:
      1) Risers: Closed.
      2) Treads: Maximum bevel or radius on leading edge of 1/2 inch in (12.8 mm).
   c. Guards, Guardrails, or Protective Walls:
      1) Openings: No openings large enough for a sphere with a diameter of 4 in (102 mm) to pass through.
      2) Minimum Height: In accordance with code, but not less than 42 in (1065 mm) above leading edge of treads or walking surface.

2. Safety of Vehicular Areas:
   a. Traffic Signs and Signals: Provide highly visible signs and signals as required to regulate traffic for safety and convenience.
      1) Comply with requirements of the State Department of Transportation for placement and design.

D. Structural:

1. Exterior Stairs, Ramps, and Elevated Walkways: Capable of supporting loads in excess of those required by code, as follows:
   a. Live Load: Minimum 150 psf (72 kPa).
   b. Concentrated Load: Minimum 400 pounds (1779 N) at any point.

2. Exterior Handrails, Guards, and Guardrails: Capable of resisting forces in excess of those required by code, as follows:
   a. Uniform Load: Minimum 50 lb/ft (0.73 kN/m) applied in any direction at the top.
   b. Concentrated Load: Minimum 200 pounds (890 N) applied in any direction at any point along the top.
   c. Normal Load to Intermediate Rails or Guard: Minimum 50 pounds (222 N) horizontally applied to area of not more than 1 foot square (305 mm square).

3. Substantiation:
   a. Construction Documents: Engineering calculations, stamped by a registered structural engineer.

E. Durability:

1. Service Life Span of Paved Surfaces: 20 years, under normally anticipatable usage.

2. Traffic Resistance: Pavement will be designed and constructed to accommodate traffic as follows, based on procedures in AASHTO GDPS-1993(supp98) and GDPS3-V2-1986, Guide for Design of Pavement Structures:
   a. Category A: Parking areas and access lanes for autos, pickups, and panel trucks only.
   b. Category A1: Truck access lanes for average daily truck traffic of 1 vehicle with 6 wheels or more.
   c. Category B: Parking entrance areas and major service lanes, with average daily traffic of 25 vehicles with 6 wheels or more.

3. Substantiation:
   a. Design Development: Identification of proven-in-use surfaces of the same type, for inspection by NREL.
   b. Construction Documents: Computations to establish pavement strength and thickness, stamped by a registered civil or structural engineer.

PRODUCTS

A. Vehicular Paving:
   1. Use any of the following:
      a. Asphalt paving at parking lots.
      b. Concrete pavement at service drives, entrance aprons, trash enclosure and pick-up areas.
      c. Storm water detention systems to accommodate large rain events.
   2. The construction will minimize use of curbs and gutters, in favor of allowing parking lots and driveways to naturally drain off onto landscaped areas.

B. Pedestrian Areas:
   1. Use any of the following:
      a. Concrete pavement.
      b. Decorative concrete topping.
      c. Concrete pavers.
      d. Stone pavers.

END OF SECTION G21

SECTION G22
SITE FIXTURES AND EQUIPMENT

PERFORMANCE

A. Basic Function:
   1. Include all fixtures, equipment (other than that associated with services), and miscellaneous structures located out-of-doors that are required by the project program and that are required as a result of these and other requirements.
   2. Site fixtures and equipment that will be provided include:
      a. Fences and Barriers: As specified in Section G and as follows:
         1) Yard Enclosure Fences: Security Level 1.
      b. Site furnishings, including:
         1) Outdoor seating and tables.
         2) Waste receptacles.
         3) Bicycle racks.
         4) Flagpole.
      c. Outdoor signs, other than roadway and parking lot signs.
      d. Minor site structures, including:
         1) Smoking shelter.
   3. Where site fixtures and equipment elements also must function as elements defined within another element group, the construction will meet the requirements of both element groups.
   4. In addition to the requirements of this section, the construction will comply with all applicable requirements of Section 111 - Facility Performance, Section G - Sitework, and Section G2 - Site Improvements.

B. Health and Safety:
   1. Physical Security:
      a. Fences and Barriers Other Than Building Exterior Walls:
         1) Security Level 1: At locations where performance is specified as to inhibit passage of people.
            a) Location: Perimeter of outdoor test areas, surround any ground mounted equipment, and surrounding any areas where hazardous or flammable materials may be stored.
            b) 6 feet (1800 mm) high with 3 strands of barbed wire above on angled outrigger.
            c) Not easily climbable.
            d) Maximum opening size 2 inch (50 mm).
         2) Substantiation:
            a) Design Development: Identification of security barriers and method of achieving performance.

C. Structure:
   1. Bicycle Racks: Constructed of materials strong enough to resist forces generated by attempted forcible removal of bicycle.

D. Durability:
   1. Service Life:
      a. Minor Site Structures: Same as for equivalent building elements.
      b. Other Fixed Site Improvements: 15 years under normal use and weather.
      c. Substantiation:
         1) Construction Documents: Proven-in-use data.
   2. Weather Resistance: Same as specified for components of exterior shell in Section B.

END OF SECTION G22

SECTION G23
LANDSCAPING

PERFORMANCE

A. Basic Function:

1. Provide landscaping over all areas of the site not finished with paving, surfacing, or buildings.

2. Landscape planting features that will be provided are:
   a. Turf areas for specific activities as described in the project program.
   b. Visual screening as described in the project program.
      1) Utility areas, including trash collection.
   c. Improvement of appearance of natural and functional features as described in the project program.
   d. Ornamental plantings.
   e. Permanent erosion control plantings in accordance with Section G.

3. The construction will not provide a permanently installed irrigation system.

4. Subcontractor will provide non-permanent irrigation system and equipment as required to accomplish maintenance activities and to provide initial establishment of plants, trees, turf, and ground cover.

5. Where landscaping elements also must function as elements defined within another element group, the construction will meet the requirements of both element groups.

6. In addition to the requirements of this section, the construction will comply with all applicable requirements of Section 111 - Facility Performance, Section G - Sitework, and Section G2 - Site Improvements.

B. Amenity and Comfort:

1. Convenience:
   a. Irrigation Connections For NREL-Furnished Equipment: At intervals as required so that sprinklers can reach all areas to be watered, using hoses of not more than 100 feet (30 meters) in length.
   b. Irrigation Frequency: At least once per day, per zone. during establishment of new vegetation.
   c. Irrigation Control: Automatically controlled.
   d. Irrigation Timing: Preset to hours between 11 pm and 8 am; adjustable.
   e. Water Use Monitoring: Provide a meter separate from building water supply meter.
   f. Substantiation:
      1) Closeout: Annual irrigation program, with monthly schedules and interim procedures for plant establishment period.

2. Appearance:
   a. Plants: Selected, arranged, and planted for pleasant appearance throughout the year.
      1) Provide a naturalized landscape using native trees, shrubs, and ground covers, with as little lawn as possible.
      2) Pleasant appearing evergreens, perennial flowers, annual flower beds, and ground covers will be provided.
      3) The landscape will be designed to look complete within a year after planting and to remain of basically the same appearance indefinitely without significant pruning.
   b. Plants in Beds: Bordered with permanent mulch or paving for tidy appearance.
   c. Mulch: Use only types of pleasant appearance.

C. Health and Safety:

1. Accidental Injury:
   a. Do not locate irrigation equipment within the field of turf intended for foot traffic.

2. Potable Water Contamination:
   a. Prevent contamination of potable water supply by irrigation water.

D. Durability:

1. Service Life: It is understood that ultimate survival of plants will depend on weather conditions as well as maintenance; however, the Subcontractor is responsible for providing plants that will survive under the specified conditions when maintained according to both the procedures specified and the procedures furnished by the Subcontractor at closeout.
   a. Soil: Suitable for growing the plants provided, with adequate nutrients for the first year of growth, based on recommendations of established authorities.
      1) Substantiation:
         a) Design Development: Existing soil tests for pH, nutrients, and texture; identification of necessary soil amendments, or replacement with other suitable soil.
         b) Construction: Soil tests of replacement soil.
         c) Closeout: Recommended fertilizer types and application rates for each type of plants.
   b. The Subcontractor will provide maintenance of all plants, including irrigation, during the first year after completion.
   c. At the end of one year after completion, if any plants are dead, dying, or wilting, the Subcontractor will replace them with other plants of better weather resistance, care for the replacement plants during their establishment period, and furnish maintenance data to NREL.

2. Weather Resistance:
   a. Trees and Woody Shrubs: Sustainable without supplemental irrigation.
   b. Mulch: Where soil would otherwise be exposed around individual plants, soil will be covered with mulch that allows penetration of precipitation but minimizes evaporation; type of mulch coordinated with erosion resistance requirements.

3. Accidental Damage:
   a. Plants in Beds: Where planting beds adjoin turf areas, edge of turf shaped for ease of mowing with motorized equipment without damage to plants in beds.
   b. Street Trees in Pavement Wells: Root area protected from mechanical damage.
   c. Irrigation Equipment: Designed and located to prevent damage by normal user traffic and plant maintenance equipment.
   d. Irrigation Equipment: Concealed in ground or out of way of landscape maintenance equipment.

4. Traffic Damage:
   a. Turf: The construction will not use turf for regularly used vehicular or pedestrian traffic surfaces, except where turf is specifically required for foot traffic use (such as playfields).

5. Insect and Disease Resistance: The construction will avoid the use of plants and turf that are known to be subject to insect damage or disease.

6. Underground Irrigation Piping and Equipment: Comply with requirements of Section D for water and drainage systems.

E. Operation and Maintenance:

1. Irrigation Water Source: Same as building supply.

2. Water Conservation: See Section G for basic water conservation requirements.
   a. Coordinate irrigation design with plant selection requirements.
   b. Do not provide irrigation for native plants.
   c. Hydrozones: The construction will locate plants of different water needs in groups for ease of water application.
   d. Rain Sensors: To prevent operation in the rain.
   e. Substantiation:

1) Design Development: Overall landscape design scheme; evapotranspiration and precipitation data for project location; preliminary Potential Water Usage calculations.
2) Construction Documents: Proven-in-use data on plants for which plant factors less than 0.6, or other than those stated herein, have been used in calculations, showing survivability in the local climate.
3) Closeout: Reference evapotranspiration data for locality, source of real-time data, and instructions for calculating actual irrigation application based on daily evapotranspiration data.

3. Ease of Maintenance:
   a. Turf: Do not use areas of turf that cannot be mowed with motorized equipment.
   b. Plants: Arranged for ease of access for weeding, mulching, and watering.
   c. Shrubs and Woody Plants: Do not use plants that require routine annual or seasonal pruning.
   d. Non-Woody Plants: Do not use plants that are not perennial.

PRODUCTS

A. Irrigation Systems:

1. The construction will use one of the following:
   a. Drip type.

END OF SECTION G23

SECTION G3
SITE SERVICES

PERFORMANCE

A. Basic Function:

1. See Section D for basic requirements for services.

2. Provide the following site services:
   a. Water Supply (G31): Means of supplying, collecting, storing, and distributing water for all purposes required in buildings and on site. See Section D2 for additional requirements.
   b. Sanitary Sewer (G32): Means of removing, treating, storing, and recycling liquid waste generated in buildings on site. See Section D2 for additional requirements.
   c. Storm Sewer (G33): Means of removing, controlling, and storing rainwater runoff from buildings and site areas. See Section D2 for additional requirements.
   d. Site Elements of Energy Supply: See Section D31 for means of distributing natural gas for energy-using services.
   e. Electrical Power (G34): Adequate supply of power for project functions. See Section D5 for additional requirements.
      1) Provide underground electrical distribution system for all buildings on site.
   f. Site Elements of Artificial Lighting: See Section D6 and D62.
   g. Site Elements of Telecommunications: See Section D7, D71, and D72.
   h Site Elements of Surveillance and Security Controls: See Section D9 and D92.
   i. Site Elements of Process Utilities: See Section D8.

3. Where site services elements must also function as elements defined within another element group, meet requirements of both element groups.

4. In addition to the requirements of this section, the construction will comply with all applicable requirements of Section 111 - Facility Performance, Section D - Services, and Section G - Site Work.

B. Amenity and Comfort:

1. Leakage: Provide distribution systems which are leak-free.

2. Accessibility: Provide clearances around components that are adequate for service and use.

C. Health and Safety:

1. Safety Hazards: Avoid creating safety hazards wherever possible; where services must involve flammable materials or hazardous operations, the construction will comply with code.

2. Unauthorized Access: Provide locking devices to stop unauthorized access.

3. Excess Pressure: Pressurized components will be designed to withstand operational pressures without failure and to relieve or reduce excessive pressure to prevent failure.

4. Electrical Shock: Isolate electrical conductors from personnel.

5. Accidental Explosion: Provide equipment designed to withstand electromotive forces without catastrophic failure.

6. Misuse: Minimize misuse that could result in damage to property, injury, or loss of life.

7. Hazardous Materials: Piping carrying flammable liquids and toxic materials clearly labeled.

8. Vermin Resistance: Provide components that are resistant to the entry of rodents and insects.

D. Structure:

1. Concealed or Buried Piping and Components: Arrange cover or concealment so that they are not

subjected to damaging stresses due to applied loads.

2. Supports for Piping and Components: Support piping and components using the following:
   a. Supports that allow movement of the pipe without undue stress on the piping, tubes, fittings, components, or foundations.
   b. Substantiation:
      1) Design Development: Details of supports, including engineering analysis.

3. Structural Design of Components and Their Supports: In accordance with code.
   a. Safety Factor for Component Structural Elements: Two; based on weight (mass) of component.
   b. Anchors: Piping will be securely and positively attached to supports.

E. Durability:

1. Service Life Span: As specified in Section D.

2. Weather Resistance:
   a. Storage Tanks and Distribution Components: Prevent freezing. Automatically controlled supplemental heating will be provided.
   b. Burial Depth of Piping: 6 inches (15 mm) below lowest recorded level at which the ground freezes. Minimum burial depth of 12 inches (30 mm).
   c. Electrical Equipment: Provide equipment which is waterproof.

3. Corrosion Resistance: Corrosion will be prevented by using corrosion-resistant materials, by preventing galvanic action, by preventing contact between metals and concrete and masonry, and by preventing condensation on metals.
   a. Metals Considered Corrosion-Resistant: Aluminum, stainless steel, brass, bronze, cast iron, ductile iron, malleable iron, hot-dipped galvanized steel, chrome-plated steel, cadmium-plated steel, and steel coated with high-build epoxy or coal tar-based paint.
   b. Underground Elements: Provide supplementary protection for underground metal pipes and tanks, sufficient to prevent corrosion completely, for the service life of the element without maintenance.
      1) 3 inches (150 mm) of concrete cover is considered to be permanent protection.
      2) Provide cathodic protection if any of the following is true; coatings or wrappings will not be considered sufficient protection for elements falling under these criteria:
         a) Metal elements are submerged or buried in a soil environment known to cause corrosion on similar nearby structures.
         b) Metal elements are submerged and buried in a soil environment in which stray DC electrical currents are present.
         c) Metal piping carrying petroleum products or other hazardous or toxic materials is buried or otherwise installed without means of visual observation of entire exterior surface of piping.

4. Resistance to Accidental Damage and Abuse:
   a. Provide barriers or protected locations for services, to prevent damage due to vehicular traffic.
   b. Buried Components: Minimum of 12 inches (300 mm) below surface of ground.
   c. Underground Piping: Watertight and rootproof.

F. Operation and Maintenance:

1. Capacity:
   a. Water and Drainage: As required by code and as specified in Section D2.
   b. Heating, Cooling, and Ventilating: Provide site services sufficient to maintain interior environment within ranges specified in Section 111.
   c. Fire Protection: As required by code and as specified in Section D4.
   d. Substantiation:
      1) Design Development: Engineering calculations showing input- and output-side capacities

and loads and sizes of distribution elements.

2) Construction Documents: Complete system details.
3) Construction and Closeout: Functional performance testing, as specified.

2. Ease of Use: Provide easy access to and working clearances around system components.

3. Minimization of Misuse: Provide locking devices to stop unauthorized access.

4. Ease of Maintenance:
   a. Piping: Provide means of isolating portions of piping system, so that small portions may be shut down leaving the remainder in operation, by using isolation valves located so that drainage of the entire system is not required for repair.

5. Provision for Change and Future Capacity:
   a. Provide electrical equipment which can be modified to increase service capacity in the future.

6. Maintenance Service: Services will be maintained as specified in Section 00830, including periodic inspections, routine maintenance recommended by manufacturers, and repair and replacement of defective elements; maintenance is required only for systems so specified.

END OF SECTION G3

SECTION G31
WATER SUPPLY

PERFORMANCE

A. Basic Function:

1. Provide means of supplying, collecting, storing, and distributing water from municipal sources for all purposes required in buildings and on site.
2. In addition to the requirements of this section, comply with all applicable requirements of Section 111 - Facility Performance, Section G - Sitework, and Section G3 - Site Services.

END OF SECTION G31

SECTION G32
SANITARY SEWER

PERFORMANCE

A. Basic Function:

1. Provide sanitary sewer system to meet building sanitary sewer requirements.
2. Sanitary Sewer Utility: See Section D - Services.
3. Sanitary Sewer:
   a. Type of Drainage: Gravity sewer.
4. In addition to the requirements of this section, comply with all applicable requirements of Section 111 - Facility Performance, Section G - Sitework, and Section G3 - Site Services.

B. Durability:

1. Life Span: Provide a sanitary sewer which will be viable for the life of building.
2. Corrosion: Provide internal coatings on concrete structures to protect against microbiologically influenced corrosion.

C. Operation and Maintenance:

1. Maximum Manhole Spacing: 400 feet (120 m).
2. Maximum Cleanout Spacing: 100 feet (30 m).
3. Replacement Field Capacity: 100 percent of original system capacity.

END OF SECTION G32

SECTION G33
STORM SEWER

PERFORMANCE

A. Basic Function:

1. Provide a stand-alone storm sewer to meet project storm drainage requirements.
   a. Type of Drainage: Gravity drain connected to the public utility system.

2. Where storm sewer elements must also function as elements defined within another element group, meet requirements of both element groups.

3. In addition to the requirements of this section, the construction will comply with all applicable requirements of Section 111 - Facility Performance, Section G - Sitework, and Section G3 - Site Services.

4. NREL will complete and submit the stormwater Notice of Intent with information provided by the design-build team
   a. Design-build team will be required to complete, document, and provide NREL with a copy of the weekly stormwater inspections
   b. A Stormwater Pollution Prevention Plan and Site-Specific Erosion Control and Sediment Plan shall be developed by the design-build team and submitted to NREL for review and approval prior to the start of construction activities
   c. The referenced plans shall be based upon NREL's Stormwater Pollution Prevention Plan.
   d. The Stormwater Pollution Prevention Plan shall also incorporate provisions addressing NREL's fugitive dust permit.
   e. Re-vegetation requirements are identified in NREL's Stormwater Pollution Prevention Plan

5. The stormwater management system shall be designed, beginning with the outlet or point of outflow from the project, giving full consideration to downstream effects and the effects of off-site flows entering the system.

6. NREL of upstream property possesses a natural easement on land downstream for drainage of surface water flowing in its natural course. The upstream property NREL may alter drainage conditions so long as the water is not sent down in a manner or quantity to do more harm to the downstream land than formerly.

7. Under Colorado State water law, any interference with stormwater flow that causes depletion, whether by evaporation or infiltration, can become a water rights issue if downstream high priority water users file a grievance. Those engaged in non-standard stormwater quality treatment practices many need to evaluate the legal issues prior to implementing their designs.

8. Trench drains in the vicinity of chemical handling areas and areas where pollutants might enter the storm water system (including loading dock and trash compactor), shall have a normally closed valve.

B. Amenity and Comfort:

1. Appearance: The construction will provide decorative storm grates with painted black finish.

C. Structure:

1. Provide storm grates with the strength to withstand repetitive loading without damage or undue wear.

2. Provide storm grates with the strength to withstand concentrated loads up to 2000 psig (13780 kPa).

D. Durability:

1. Life Span: Provide a storm sewer which will be viable for the life of building.

2. Provide storm grates which resist corrosion in dock areas.

3. Flood: Provide a storm sewer which diverts storm water safely away from the building. Provide structures which channel drainage from roads.

E. Operation and Maintenance:

1. Maximum Cleanout Spacing: 100 feet (30 m).
2. Ease of Repair: Provide trench drains with replaceable covers or grates.

END OF SECTION G33

SECTION G34
ELECTRICAL POWER

PERFORMANCE

A. Basic Function:

1. Provide electrical power supply and distribution elements.
2. Where site electrical power elements must also function as elements defined within another element group, the construction will meet requirements of both element groups.
3. In addition to the requirements of this section, the construction will comply with all applicable requirements of Section 111 - Facility Performance, Section G - Sitework, and Section G3 - Site Services.

B. Amenity and Comfort:

1. Appearance:
   a. Provide underground electrical power distribution with pad mounted transformers.

C. Health and Safety:

1. Fire Source: Provide site electrical elements which are incombustible.
2. Electrical Shock Prevention: Provide utility required and code required clearances. Provide arc flash labeling at all components.

Provide minimum 12 inch clearance between electrical and other systems.

D. Durability:

1. Life Span: Provide a system which will be viable for the life of building.
2. Corrosion: Provide buried conduits which are resistant to corrosion.

E. Operation and Maintenance:

1. Capacity: As indicated by load calculations or specified in Section D.
2. Transformer Ratings:
   a. Primary Voltage/Phase/Frequency: As provided by utility company.
   b. Secondary Voltage/Phase/Frequency: 480 volt/3 phase/60 Hz.
3. Ease of Cleaning: Provide electrical distribution elements with removable access panels to allow cleaning.
4. Ease of Maintenance: Provide electrical distribution elements which are modular in design and can easily be repaired or replaced.
5. Marking: See Section G39.

END OF SECTION G34

SECTION G39
UNDERGROUND UTILITY MARKING

1.1 SUMMARY

A. This Section includes underground utility marking guidelines and requirements for installation of locate ball markers based on manufacturers' data.

B. Products listed herein are the 3M electronic marker system (EMS). No substitution will be allowed.

C. NREL owns 3M Dynatel Advanced Locator 2250. Marker balls shall be compatible with this unit.

1.2 REFERENCES

A. 3M Dynatel manufacturer information.

1.3 SUBMITTALS

A. As-Built Drawings: Provide red-line drawings showing locations of marker balls with each ball marked with their NREL Marker number. These red-line drawings are to be incorporated into the final as-built set of drawings.

B. NREL shall provide the Contractor with the Utility Marker Ball Location form which is to be returned to NREL at the completion of the underground utility installation. Contractor shall fill in the information requested for all ID marker ball installations. Information to be provided is:

1. NREL Marker # - Numbering sequence as shown and described below in Paragraph 3.1-G
2. Location - Descriptive location of where marker ball has been placed. This will include the following information as applicable:
   a. Bends
      1) Degree of bend
      2) Direction of bend
   b. Tees
      1) Direction of branch
   c. Capped line; Plugged line; End of line
3. Depth - Distance from finished surface shown in feet and inches
4. Manufacturer ID # - As shown on manufacturer ID tag

1.4 QUALITY ASSURANCE

A. Field quality-control test: Test, locate each installed marker ball for performance and correct identity.

1.5 SEQUENCING AND SCHEDULING

A. Coordination

1. Contractor to coordinate installation of marker balls with utility trenching and installation activities.

1.6 MANUFACTURERS

A. 3M Dynatel. No substitution allowed.

B. For utilities located within 5' of surface - 3M ID Extended Range Ball Marker Series 1420-XR/ID, programmable, color identified by trade.

1. Gas - Yellow, 1425-XR/ID
2. Power - Red, 1422-XR/ID
3. Telephone/Communication - Orange, 1421-XR/ID

4. Sanitary Sewer - Green, 1424-XR/ID
5. Water - Blue, 1423-XR/ID

C. Intermediate marker balls shall be - 3M Non RFID Marker Series 1400-XR

1. Gas - Yellow, 1405-XR
2. Power - Red, 1402-XR
3. Telephone/Communication - Orange, 1401-XR
4. Sanitary Sewer - Green, 1404-XR
5. Water - Blue, 1403-XR

1.7 ERECTION, INSTALLATION AND APPLICATION

A. Tracer wire is required on Gas, Telephone/Communication (telecom), Water, and Sanitary Sewer.

B. Marker tape 1' below surface is required on all underground utilities.

C. Marker balls shall be placed a minimum of 4" directly above utility pipe. If the utility pipe is deeper than 5' contractor shall place the marker balls 5' below the surface.

D. Where necessary, marker balls shall be secured to the utility by inserting a cable tie through the marker ball tie-down tabs and around the utility pipe.

E. Once the marker has been placed, hand-fill at least 6"of soil over the marker. Continue normal backfill operations once hand-filling is complete.

F. Intermediate marker balls shall be utilized on straight runs of pipe. These balls do not require any ID marker information. Intermediate marker balls will be placed every 50' unless directed otherwise.

G. Marker ID balls shall be placed as identified below:

1. At all bends 22.5° or higher
2. At capped or plugged ends
3. At tees

H. Program each marker ID ball with NREL Marker Number. NREL shall provide the starting sequence number for the installation. Marker number sequence will follow the general guideline shown below:

1. Gas: G1, G2, etc.
2. Telecom: TC1, TC2, etc.
3. Power: P1, P2, etc.
4. Water: W1, W2, etc.
5. Sanitary Sewer: SS1, SS2, etc.

1.8 FIELD QUALITY CONTROL

A. Verify each installed marker ball for performance and correct identity.

END OF SECTION G39

7. Substantiation:

SUBSTANTIATION SUMMARY FORM

TITLE AND LOCATION
Energy Systems Integration Facility, National Renewable Energy Laboratory, Golden, CO

			TYPE OF SUBMITTAL											CLASSIFICATION		PROJECT PHASE				
SECTION	PARAGRAPH NUMBER	DESCRIPTION OF ITEM SUBMITTED	01 - PRECON SUBMITTALS	02 - SHOP DRAWINGS	03 - PRODUCT DATA	04 - SAMPLES	05 - DESIGN DATA	06 - TEST REPORTS	07 - CERTIFICATES	08 - MFRS INSTRUCTIONS	09 - MFRS FIELD REPORT	10 - O&M DATA	11 - CLOSEOUT SUBMITTAL	FOR INFORMATION ONLY	GOVERNMENT APPROVED	PreliminaryDesign	Design Development	Construction Documents	Construction	Commissioning/Close-out
111	A4c13	LEED Checklist annotated to show specific credits status of design related to specific credits to be achieved.														x	x	x		
111	A4c1a	Sustainability Design Report to include annual energy consumption calculations for the base-case building ar the proposed case building															x			
111	A4C3b	Comprehensive checklist of certification documentatio specified in LEED Reference Guide, annotated to show which forms of documentation have been submitted															x	x		
111	A4c3c	Documentation specified in LEED Reference Guide tha is relevant to the degree of completion of the design															x	x		
111	A4c1b	10 page maximum narrative describing how the Design Builder proposes to achieve PUE and EUE goals															x	x		
111	A4c1c	ASHRAE 140 compliant energy model using NREL provided weather file															x	x		
111	A4c4a	Submit LEED application and pay applicable fees.																		x
111	A4c4b	Provide all certification documentation and install certification plaque.																		x
111	A4c4c	Provide Owner a complete duplicate of certification documentation.																		x
111	C2b1	For load-resisting elements, structural design calculations and drawings sealed by licensed structura engineer																	x	
111	C3c1	If methods prescribed by NFPA 780 are not used, description of engineering basis of design, including grounding terminal design															x			
111	C3c2	If grounding in very shallow or dry soil, or in rock, is required, ground resistance measurements and engineering analysis of ground terminal design.															x			
111	C3c3	Diagrams showing locations of strike (air) terminals an zones of protection; identification of internal componen that require bonding to equalize potential															x			
111	C3c4	Engineering analysis of equalization of potential to met bodies within the structure																x		
111	C3c5	Drawings showing locations and sizes of conductors, bonding of metal bodies, and components; detailed installation specifications.																x		
111	C3c6	Continuity tests for grounding conductors, equipotentia bonding of other systems, and ground terminals; groun resistance test for each ground terminal, or equivalent taking into account related grounding systems																		x
111	C3c7	Certification of system complying with UL Master Labe or Lightning Protection Institute Certified System requirements																		x
111	C3c8	Maintenance and inspection procedures.																		x
111	C3d9	Project record data; location of ground terminals, groun resistance and soil conditions at time of test																		x
111	C4c2a	Identification of methods to be used to comply with requirements; ventilation design calculations. Identification of unusual indoor contaminants or source and methods to mitigate their effects on occupants.															x			
111	C4c2b	Specifications showing that construction materials are not contaminant sources and do not adversely affect ai quality. Provide all documentation required by ANSI/ASHRAE 62.1-2004																x		

SUBSTANTIATION SUMMARY FORM

TITLE AND LOCATION
Energy Systems Integration Facility, National Renewable Energy Laboratory, Golden, CO

			TYPE OF SUBMITTAL											CLASSIFICATION		PROJECT PHASE				
SECTION	PARAGRAPH NUMBER	DESCRIPTION OF ITEM SUBMITTED	01 - PRECON SUBMITTALS	02 - SHOP DRAWINGS	03 - PRODUCT DATA	04 - SAMPLES	05 - DESIGN DATA	06 - TEST REPORTS	07 - CERTIFICATES	08 - MFRS INSTRUCTIONS	09 - MFRS FIELD REPORT	10 - O&M DATA	11 - CLOSEOUT SUBMITTAL	FOR INFORMATION ONLY	GOVERNMENT APPROVED	PreliminaryDesign	Design Development	Construction Documents	Construction	Commissioning/Close-out
111	C4c2c	Field measured outside and supply air quantities for each space and its associated air handler. Provide all testing and documentation required by ANSI/ASHRAE 62.1-2004																		x
111	C4c2d	Field testing to show compliance, after full occupancy																		x
111	C4d1	Wind study.															x			
111	C7c1	Noise measurements as needed during construction phase commissioning to demonstrate equipment noise meets criteria of statute																	x	
111	C7c2	Noise measurements during commissioning to demonstrate noise of operating equipment meets criter of statute																		x
111	D2a	Detailed listing of design criteria and preliminary analysis, prepared by a licensed structural engineer.															x			
111	D2b	Detailed design analysis by licensed structural engineer																x		
111	E1c1	Service life expectancy analysis, for each element for which life span is specified; including: a) Length of effective service life and aesthetic service life if specified, with action required at end; e.g. complete replacement and partial replacement. b) Conditions under which estimate will be valid; e.g. expected uses, inspection frequency, maintenance frequency, etc															x			
111	E1c2	Replacement cost, in today's dollars, for each major element that has a service life expectancy less than tha of the project; include both material and labor cost, but not overhead or profit; base costs on installing in existing building, not as a new installation															x			
111	E1c3	Life cycle cost of project, over the specified project service life, excluding operating staff costs; include costs of: a) Replacement of each element not expecte to last the life of the project; identify the frequency of replacement. b) Deduct salvage value of replaced elements. c) Calculate costs in today's dollars, disregarding the time value of money, inflation, taxes, and insurance															x			
111	F2b1	Detailed listing of design criteria and design analysis showing compliance, prepared by a licensed mechanic engineer.														x				
11	F2b2	Energy cost of all energy-consuming equipment and systems over the first year of operation; include analys of probable change in annual cost over time due to aging but disregarding inflation and rate changes														x				
111	F2b3	Detailed listing of design criteria and design analysis showing compliance, prepared by a licensed mechanic engineer																x		
111	F2b4	Updated energy cost of all energy-consuming equipme and systems over the first year of operation; include analysis of probable change in annual cost over time due to aging but disregarding inflation and rate changes																x		
111	F3a1	Quantity of water that will be used in the first year of operation, divided into domestic water, HVAC water, an other water categories, with required storage capacity and quantity of water recycled, if any; include basis of calculations														x				
111	F3a2	Updated water consumption, based on actual equipme selections and sizes.																x		

SUBSTANTIATION SUMMARY FORM

TITLE AND LOCATION
Energy Systems Integration Facility, National Renewable Energy Laboratory, Golden, CO

			TYPE OF SUBMITTAL											CLASSIFICATION		PROJECT PHASE				
SECTION	PARAGRAPH NUMBER	DESCRIPTION OF ITEM SUBMITTED	01 - PRECON SUBMITTALS	02 - SHOP DRAWINGS	03 - PRODUCT DATA	04 - SAMPLES	05 - DESIGN DATA	06 - TEST REPORTS	07 - CERTIFICATES	08 - MFRS INSTRUCTIONS	09 - MFRS FIELD REPORT	10 - O&M DATA	11 - CLOSEOUT SUBMITTAL	FOR INFORMATION ONLY	GOVERNMENT APPROVED	PreliminaryDesign	Design Development	Construction Documents	Construction	Commissioning/Close-out
111	F5b1	Operating impact analysis, including identification of type and quantity of staff, tools, and supplies required; estimate of impact that aging materials will have on operating requirements; no cost calculations required; identify source of data														x				
111	F5b2	Updated operating impact analysis, based on actual product selections.																x		
111	F6a1	Maintenance impact analysis, including identification of maintenance effort (type of staff, time required, and frequency), tools, and supplies required, over expected functional and aesthetic service life of project; including preventive maintenance, replacement of parts, and cleaning, but not energy for operation or replacement at end of service life; no cost calculations required; identif source of data														x				
111	F6a2	Updated maintenance impact analysis, based on final product selections.																x		
111	Subst C1	Previous Construction: Identify proven-in-use element proposed for use, including building name, location, dat of construction, owner contact, and description of desig and materials in sufficient detail to enable reproduction in this project															x			
111	Subst D1	Mock-Up Testing: Idenfity proven-by-mock-up element proposed for use, with test report including date and location of test, name of testing agency, and descriptio of test and mock-up																		
111	Subst F3c	Provide manufacturer's product literature for each bran name product.																	x	
111	Subst F3d	Provide the manufacturer's certification that the produc used on the project complies with the contract documents.																	x	
111	Subst F4	Provide copies of all manufacturer warranties that extend for more than one year after completion																	x	
111	Subst F4	Provide all submittals and operations and maintenance manuals.																		x
A	B1e1	Identification of major thermal resistant materials and systems.														x				
A	B1e2	Detailed listing of design criteria and design analysis, prepared by licensed mechanical engineer															x			
A	B1e3	Product data on thermal materials and details of continuous thermal barrier.																x		
A	B2a1	Identification of major water resistant assemblies and drainage features														x				
A	B3a1	Water Accumultion: Identification of dewatering methods to be used														x				
A	B3a2	Water Accumulation: Details of proven-in-use or prove by-mock-up design																x		
A	C1d1	Fire Resistance: Identification of assemblies required have fire resistance rating and method to be used to achieve rating															x			
A	C1d2	Fire Resistance: Identifying numbers on the construction drawings																x		
A	C2a1	Substance Exclusion: Details of proven-in-use or proven-by-mock-up design																x		
A	C32a2	Field testing to verify the absence of significant levels o harmful gases and chemicals after minimum of 6 months' occupancy.																		x

SUBSTANTIATION SUMMARY FORM

TITLE AND LOCATION
Energy Systems Integration Facility, National Renewable Energy Laboratory, Golden, CO

			TYPE OF SUBMITTAL											CLASSIFICATION		PROJECT PHASE				
SECTION	PARAGRAPH NUMBER	DESCRIPTION OF ITEM SUBMITTED	01 - PRECON SUBMITTALS	02 - SHOP DRAWINGS	03 - PRODUCT DATA	04 - SAMPLES	05 - DESIGN DATA	06 - TEST REPORTS	07 - CERTIFICATES	08 - MFRS INSTRUCTIONS	09 - MFRS FIELD REPORT	10 - O&M DATA	11 - CLOSEOUT SUBMITTAL	FOR INFORMATION ONLY	GOVERNMENT APPROVED	PreliminaryDesign	Design Development	Construction Documents	Construction	Commissioning/Close-out
A	C2a3	Field testing to verify the absence of significant levels harmful gases and chemicals after minimum of 6 months' occupancy.																		x
A	D5a	Soil investigation report, detailed listing of design criteria, and preliminary analysis, prepared by a license structural engineer														x				x
A	D5b	Detailed design analysis by licensed structural engineer																x		
A13	B1C1	Product data on thermal materials and details of construction to achieve required thermal performance																x		
A2	B1b1	Subsurface investigation to identify location of water table and identification of basement areas requiring waterproofing systems.															x			
A2	B1b2	Product data on water protection materials and system details of basement construction to achieve permanent water protection																x		
B	B1f1	Identification of major thermal resistant materials and systems														x				
B	B1f2	Detailed listing of design criteria and design analysis, prepared by licensed mechanical engineer.															x			
B	B1f3	Product data on thermal materials and details of continuous thermal barrier																x		
B	B3a1	Identification of major water resistant assemblies														x				
B	B3a2	Details of proven-in-use or proven-by-mock-up design															x			
B	B5b1	Drawings showing natural ventilation location, ventilatio opening areas, and floor areas being served															x			
B	B5b2	Engineering design calculations and drawings prepared by licensed engineer																x		
B	B6e1	Acostical analysis prepared by an acoustical engineer															x			
B	B8d1	Drawings showing facade treatment for principal elevations identifying visible materials														x				
B	B8d2	Drawings and artist's rendering showing all building elements that are part of the shell with sizes and locations to scale															x			
B	B8d3	Details of building shell, annotated to show compliance with performance requirements																x		
B	C1a1	Identification of assemblies required to have fire resistance rating and method to be used to achieve rating															x			
B	C1a2	Identifying fire resistance numbers on the construction drawings																x		
B	C3g1	Identification of materials to be used, the physical properties that accomplish the security requirements, and details of anchorage to the structure.															x			
B	C3g2	Mock-up testing of materials used to comply with security requirements, except obviously compliant materials; construction details																x		
B	C4b1	Drawings showing natural ventilation location, ventilatio opening areas, and volumes being served															x			
B	D1e1	Detailed listing of design criteria and preliminary analysis, prepared by a licensed structural engineer														x				
B	D1e2	Detailed design analysis by licensed structural enginee (for structures engineered by their manufacturer or fabricator, engineer-of-record will provide detailed design criteria, with design analysis postponed until construction stage)																x		
B	D1e3	For structures engineered by their manufacturer or fabricator, detailed design analysis prepared by and shop drawings stamped by a licensed structural engineer, with approval of engineer-of-record recorded																	x	

SUBSTANTIATION SUMMARY FORM

TITLE AND LOCATION
Energy Systems Integration Facility, National Renewable Energy Laboratory, Golden, CO

			TYPE OF SUBMITTAL											CLASSIFICATION		PROJECT PHASE				
SECTION	PARAGRAPH NUMBER	DESCRIPTION OF ITEM SUBMITTED	01 - PRECON SUBMITTALS	02 - SHOP DRAWINGS	03 - PRODUCT DATA	04 - SAMPLES	05 - DESIGN DATA	06 - TEST REPORTS	07 - CERTIFICATES	08 - MFRS INSTRUCTIONS	09 - MFRS FIELD REPORT	10 - O&M DATA	11 - CLOSEOUT SUBMITTAL	FOR INFORMATION ONLY	GOVERNMENT APPROVED	PreliminaryDesign	Design Development	Construction Documents	Construction	Commissioning/Close-out
B	E1g	Durability: Iincluding service life analysis and life cycle cost analysis																		
B	E2b	Drawings showing paths of water movement, with particular attention to changes in direction or orientatio and joints between different assemblies																x		
B	E3i2	Details of proven-in-use materials and test reports															x			
B	E5c1	Identification of building elements providing moisture barrier, materials to be used, and data showing performance.														x				
B	E5c2	Providen in-use or proven-by-mock-up data.															x			
B1	C2b1	Identification of major fire resistive materials and systems														x				
B1	C2b2	List of laboratory tested fire resistive assemblies to be used															x			
B1	C2b3	Identification of laboratory test numbers on the construction drawings for fire resistive assemblies to b used																x		
B22	B1c1	For standard manufactured products, certification of specified properties by NFRC or other testing agency acceptable to Owner; for custom-fabricated elements, test reports																	x	
B22	B2c1	For standard manufactured fenestration products, certification of specified properties by NFRC or other testing agency acceptable to Owner; for other elements test reports																	x	
B23	B2a1	Details of method of weather sealing; test reports on door/frame assemblies															x			
B23	B3a1	Details of method of weather sealing; test reports on door/frame assemblies.															x			
B3	A6a	Roof inspection conducted in the first spring after completion of roofing, after chance of snow has passed																		x
B3	C2c1	Identification of assemblies or methods used															x			
B3	C2c2	Fire rating identification numbers recognized by code authorities, on the construction drawings																x		
B3	D2b1	Identification of assemblies or methods used															x			
B3	D2b2	Identifying fire resistive numbers on the construction drawings																x		
B3	E1b1	Service life analysis and life cycle cost analysis															x			
B3	E2a1	Water flood tests of roof areas that can accumulate rainwater if primary drains are blocked, up to depth for which structure is designed																	x	
B3	E5c1	Proven-in-use products, or demonstration using tests appropriate to materials used, over same type of substrates as will be used in construction															x			
B31	E1d1	Material type, expected functional life span, expected changes in appearance over life span, and manufacture warranty available															x			
B31	E1d2	Quality assurance program to be implemented to ensur complete and correct installation of weather-barrier elements																x		
B31	E1d3	Actual manufacturer's warranty.																	x	
B31	F1a1	Calculations of capacity.															x			
B31	F1a2	Water tests.																	x	
B32	B2b	Skylights: Static pressure test in accordance with ASTM E 331-2000; mock-up test performed for this project required																x		
B32	E1a1	Manufacturer's warranty.																	x	

SUBSTANTIATION SUMMARY FORM

TITLE AND LOCATION
Energy Systems Integration Facility, National Renewable Energy Laboratory, Golden, CO

			TYPE OF SUBMITTAL											CLASSIFICATION		PROJECT PHASE				
SECTION	PARAGRAPH NUMBER	DESCRIPTION OF ITEM SUBMITTED	01 - PRECON SUBMITTALS	02 - SHOP DRAWINGS	03 - PRODUCT DATA	04 - SAMPLES	05 - DESIGN DATA	06 - TEST REPORTS	07 - CERTIFICATES	08 - MFRS INSTRUCTIONS	09 - MFRS FIELD REPORT	10 - O&M DATA	11 - CLOSEOUT SUBMITTAL	FOR INFORMATION ONLY	GOVERNMENT APPROVED	PreliminaryDesign	Design Development	Construction Documents	Construction	Commissioning/Close-out
C	B4d1	Engineering calculations for representative spaces, predicting anticipated daylighting levels under specified conditions															x			
C	B5f1	Engineering calculations for representative spaces, predicting acoustical conditions														x				
C	B5f2	Engineering design calculations and drawings sealed b licensed acoustical engineer																x		
C	C2b1	Identification of assemblies required to have fire resistance rating and method to be used to achieve rating															x			
C	C2b2	Identifying numbers placed on the construction drawings																x		
C	D1b1	Detailed listing of design criteria and preliminary analysis, prepared by a licensed structural engineer															x			
C	D1b2	Detailed design analysis by licensed structural engineer																x		
C1	B1d1	Drawings indicating proven-in-use STC values for construction separating primary spaces and separating primary spaces from noise sources such as mechanica equipment															x			
C1	B1d2	Proven-in-use or proven-by-mock-up data substantiatir STC values.																x		
C1	B1d3	Field tests of representative construction, conducted after all systems are in operation.																	x	
C1	E1a1	Identification of primary materials intended for use in these spaces.														x				
C1	E1a2	Details of critical conditions																x		
C12	C2c1	Exit hardware testing by agency acceptable to local authorities.																	x	
C16	E5a1	Provide, for minimum of 3 existing applications, date of installation of floor covering; maintenance, repair, and replacement history; recommended inspection and maintenance program; detailed evaluation of similaritie and differences of historical application from proposed application; estimated life span of similar assembly if constructed today															x			
C19	A2a	Provide design details of the plenum, access floor and penetrations. Identify leakage paths and sealing methods.															x			
C19	A2b	Provide mock-up of an area of approximately 1,000 sq.ft. with the expected penetrations, wall sealing, and other Category 1 and 2 leakage paths expected. Confirm leakage rates within the allowable range																	x	
C2	D1a1	Engineering calculations or proven-in-use substantiation																x		
C2	D2c1	Detailed listing of design criteria and preliminary analysis, prepared by a licensed structural engineer															x			
C2	D2c2	Detailed design analysis by licensed structural engineer																x		
C2	E1e1	Product data on hardware and other movable components of interior fixtures.															x			
C2	E1e2	Details of interior fixtures, documenting construction features																x		
C23	D1c1	Test results or proven-in-use data for proposed window treatments																x		
C24	A1h4d1	Audio-visual space layouts, showing normal seating locations, projection locations, and recommended projection equipment															x			
C24	A1h4d2	Certification of suitability of selected projection surface by manufacturer; identification of required projection equipment																x		

SUBSTANTIATION SUMMARY FORM

TITLE AND LOCATION
Energy Systems Integration Facility, National Renewable Energy Laboratory, Golden, CO

			TYPE OF SUBMITTAL											CLASSIFICATION		PROJECT PHASE				
SECTION	PARAGRAPH NUMBER	DESCRIPTION OF ITEM SUBMITTED	01 - PRECON SUBMITTALS	02 - SHOP DRAWINGS	03 - PRODUCT DATA	04 - SAMPLES	05 - DESIGN DATA	06 - TEST REPORTS	07 - CERTIFICATES	08 - MFRS INSTRUCTIONS	09 - MFRS FIELD REPORT	10 - O&M DATA	11 - CLOSEOUT SUBMITTAL	FOR INFORMATION ONLY	GOVERNMENT APPROVED	PreliminaryDesign	Design Development	Construction Documents	Construction	Commissioning/Close-out
D	B1c1	Overall lighting scheme, including types of luminaires and lamps for primary spaces															x			
D	B1c2	Calculations of illuminance levels for representative spaces, prepared by a registered electrical engineer																x		
D	B1c3	Measurements of luminance and illuminance levels for representative spaces throughout the project, with a report setting forth results after correcting for maintenance factors keyed to luminaire design and lam types																	x	
D	B5a1	Identification of sound- and vibration-generating equipment and method of isolation.														x				
D	B5a2	Details of isolation methods																x		
D	B5a3	Measurement of sound transmitted through structure during functional performance testing and during full operation of all systems																		x
D	C1c	Combustible Materials, Where Allowed: UL listed or labeled, with flame spread and smoke developed rating printed on product																x		
D	D1f1	Details of supports, including engineering analysis															x			
D	F1g1	Engineering calculations showing input- and output-sid capacities and loads and sizes of distribution elements															x			
D	F1g2	Complete system details																x		
D	F1g3	Functional performance testing, as specified in Section 8.9.																	x	
D	F3f1a	Identification of systems and equipment to be tested an method of test															x			
D	F3f1b	Complete commissioning plan																x		
D	F3f1c	Commissioning reports.																		x
D	F3g1a	Schedule of demonstrations.																x		
D	F3g1b	Training plan and schedule.																x		
D	F3g1c	Documentation of training conducted. Submit a complete O&M manual with approved shop drawings and equipment warranties and other close-out documents as indicated in Section 8.																	x	
D	F6f1	Identification of parts normally replaced during routine maintenance and parts replaced only when damaged or unexpectedly worn out; location of stocking distributors																x		
D	F8a1	Identify locations of major pieces of equipment														x				
D	F8a2	Submit the measurements of the major pieces of equipment and the path for removal from the building. Verify doors and corridors provide adequate clearance for removal of equipment															x			
D	F8a3	Indicate sizes of doors and corridors used for removal equipment. Indicate equipment sizes.																x		
D2	F1a3a	Identification of pressure and flow requirements (desig conditions) for the building; verification of source availability at design conditions. Submit preliminary piping sizing calculations														x				
D2	F1a3b	Equipment to be used to deliver water at design conditions; submit pump curves and final piping size calculation.																x		
D2	F1a3c	Test of system flow and pressure; submit report verifying performance.																	x	
D2	F1d1	Analysis and documentation of water supply source an flow conditions.														x				
D2	F1d2	Piping design calculations and entrance locations															x			

SUBSTANTIATION SUMMARY FORM

TITLE AND LOCATION
Energy Systems Integration Facility, National Renewable Energy Laboratory, Golden, CO

			TYPE OF SUBMITTAL											CLASSIFICATION		PROJECT PHASE				
SECTION	PARAGRAPH NUMBER	DESCRIPTION OF ITEM SUBMITTED	01 - PRECON SUBMITTALS	02 - SHOP DRAWINGS	03 - PRODUCT DATA	04 - SAMPLES	05 - DESIGN DATA	06 - TEST REPORTS	07 - CERTIFICATES	08 - MFRS INSTRUCTIONS	09 - MFRS FIELD REPORT	10 - O&M DATA	11 - CLOSEOUT SUBMITTAL	FOR INFORMATION ONLY	GOVERNMENT APPROVED	PreliminaryDesign	Design Development	Construction Documents	Construction	Commissioning/Close-out
D2	F1d3/4	Air and water tests of piping systems at 150 percent of operating pressure (to a maximum of 150 psig), maintaining pressure for 4 hours to demonstrate syster is watertight; Functional tests of fixtures and equipmer																x		
D2	F1d5	Observation of function during full occupancy simulatin extreme conditions.																		x
D2	F2f1	Analysis and documentation of sewer discharge metho and locations														x	x			
D2	F2f2	Drainage design calculations and documentation of piping outlets															x			
D2	F2f3	Air and water pressure tests of piping systems; functional tests of drains and equipment under simulate full occupancy loads																x		
D2	F2f4	Observation of function during full occupancy simulatin extreme conditions																		x
D2	F3c1	Analysis and documentation of storm water discharge methods and locations																		
D	F3c2	Drainage design calculations and documentation of piping outlets															x			
D	F3c3	Air pressure test to verify continuity of piping; functiona tests of each drain																	x	
D22	E1a	Manufacturer's unconditional warranty																	x	
D22	E2a	Manufacturer's unconditional warranty																	x	
D23	E4b1	Analysis and documentation of domestic hot water load and capacity available from the waste heat system.														x				
D23	E4b2	Hot water calculations and documentation of piping systems															x			
D23	E4b3	Piping pressure test and functional tests of hot water a fixtures.																	x	
D24	F2a4a	Manufacturer's maintenance schedule and recommended methods															x			
D3	A5a	Submit loads and one line diagrams of all systems showing equipment and distribution sizing														x				
D3	B3a1	Measurement of temperature and humidity in all areas identified in Section D99 as well as all spaces located on a perimeter wall.																		x
D3	B10c	Hoods shall be verified for containment using in-situ testing protocols in accordance with ASHRAE Standar 110.																		x
D3	C3c1a	Measurement of refrigerant concentration in mechanic equipment rooms where refrigerants are located																	x	
D3	C4a1	Indoor air quality: Engineering analysis.															x			
D3	C4a2	Indoor air quality: Chemical testing as required by LEE Credit EQ 3.2.																		x
D3	C6a1a1	Submit how equipment will be isolated and provide calculations, details and product data.															x			
D3	D1a1	Identification of design strategies to minimize HVAC disturbances.														x				
D3	D1a2	Identification of equipment that requires redundancy.																x		
D3	D1a3	Functional performance testing.																	x	

SUBSTANTIATION SUMMARY FORM

TITLE AND LOCATION
Energy Systems Integration Facility, National Renewable Energy Laboratory, Golden, CO

			TYPE OF SUBMITTAL											CLASSIFICATION		PROJECT PHASE				
SECTION	PARAGRAPH NUMBER	DESCRIPTION OF ITEM SUBMITTED	01 - PRECON SUBMITTALS	02 - SHOP DRAWINGS	03 - PRODUCT DATA	04 - SAMPLES	05 - DESIGN DATA	06 - TEST REPORTS	07 - CERTIFICATES	08 - MFRS INSTRUCTIONS	09 - MFRS FIELD REPORT	10 - O&M DATA	11 - CLOSEOUT SUBMITTAL	FOR INFORMATION ONLY	GOVERNMENT APPROVED	PreliminaryDesign	Design Development	Construction Documents	Construction	Commissioning/Close-out
D3	D1a4	If equipment is damaged or malfunctions within one yea after completion, reporting of the cause of equipment damage or malfunctions. b) Corrective Action: The construction will be modified to provide corrective measures necessary to eliminate equipment damage and malfunctions. c) Corrective Action Report: Identification of corrective measures implemented to protect HVAC equipment. Verify that HVAC equipment is operating properly and without damage.																		x
D3	Products C1	Calculations of system pressures and equipment selection including temperature and altitude correction														x				
D3	Products C2	Final equipment selection, equipment schedule and air handling unit detail showing all components and arrangement.															x			x
D31	A2a	Identification of each piece of equipment requiring fuel														x				
D31	A2b	Distribution system and equipment connections shown on drawings															x			
D31	A2c	Building commissioning services; pressure verification functional performance testing; proper fuel supply, combustion, and venting																	x	
D32	B2a	Submit system one-line diagrams, HVAC plans and calculations for the system.														x				
D32	B2b	Submit calculations of heat loss by room, zones and building; capacity of the distribution systems and all he generating and heat transfer equipment.															x			
D33	C1a1	Estimated cooling loads and design criteria. Submit on line diagrams of all systems.														x				
D33	C1a2	Design calculations and sample manufacturer data showing capacity available. Provide psychomatic analysis.															x			
D33	C1a3	Manufacturer's data showing performance, certified by independent testing agency.																x		
D33	C2a1	Manufacturer data showing efficiency available.															x			
D33	C2a2	Manufacturer's data showing performance, certified by independent testing agency.																	x	
D34	B3a	Submit Psychrometric analysis and summary of syster selection.														x				
D34	B3b	Equipment schedules, final system plans and coordination of necessary vapor barriers.															x			
D34	B3c	Provide functional testing and measurement that space conditions are met.																	x	
D34	B4b1	Measure air movement at work station in accordance with ANSI/ASHRAE Standard 55-2004 in areas where more than 10 percent of the occupants are uncomfortable and adjust air distribution system to mal occupants comfortable.																		x
D34	B10a	Submit calculations with the design of all air handling duct systems. Include calculations for duct sizing, fan sizing, damper sizing, and noise criteria.														x				
D34	B10b	Final ductwork playout, blancing dampers and equipment schedules and details. Updated calculation as required.																x		
D34	B10c	Submit final test and balance reports with all air flows and each air device, pressure drop at each component and pilot transverse at each fan and major duct branch.																	x	

SUBSTANTIATION SUMMARY FORM

TITLE AND LOCATION
Energy Systems Integration Facility, National Renewable Energy Laboratory, Golden, CO

			TYPE OF SUBMITTAL											CLASSIFICATION		PROJECT PHASE				
SECTION	PARAGRAPH NUMBER	DESCRIPTION OF ITEM SUBMITTED	01 - PRECON SUBMITTALS	02 - SHOP DRAWINGS	03 - PRODUCT DATA	04 - SAMPLES	05 - DESIGN DATA	06 - TEST REPORTS	07 - CERTIFICATES	08 - MFRS INSTRUCTIONS	09 - MFRS FIELD REPORT	10 - O&M DATA	11 - CLOSEOUT SUBMITTAL	FOR INFORMATION ONLY	GOVERNMENT APPROVED	PreliminaryDesign	Design Development	Construction Documents	Construction	Commissioning/Close-out
D34	C5a	Provide Computational Fluid Dynamic (CFD) modeling of a typical laboratory to show air flow patterns within the lab.														x				
D34	E1b1a1	Identification of ducts to be tested.															x			
D34	E1b1b1	Verification of mock-up leakage rate.																	x	
D34	E1e1a	Identification of the type of fan to be used.														x				
D34	E1e1b	Calculations showing the air distribution pressure characteristics and data supporting the selection of the fan.																x		
D34	E1e1c	Calculations showing the air distribution systems pressure characteristics; AMCA seal and ratings on each fan used.																	x	
D34	E6a1	EER and Energy modelings with summary of energy us for proposed equipment.														x				
D34	E6a2	Manufacturers published EER for equipment selected for this project.															x			
D34	E6a3	Equipment with manufacturers label listing EER for equipment.																	x	
D35	E1a1a	Calculations showing each hydronic system load, pressure and temperature requirements. Identification of the type of pump to be used. Provide one-line diagrams showing all equipment and flow racks														x				
D35	E1a1b	Calculations showing the hydronic distribution water flo and pressure requirements and pump data supporting pump selection															x			
D35	E1a1c	Calculations showing the hydronic system pressure requirements; manufacturer's pump curve for each pump used.																	x	
D36	B1c7a	Calculations showing the hydronic system pressure requirements; manufacturer's pump curve for each pump used.														x				
D36	B1c7b	Documents showing zoning, equipment locations, and air distribution. Equipment cut sheets															x			
D36	B1c7c	Final control schematics and sequences of operation																x		
D36	B1c7d	Report conforming to AABC Test and Balance Procedures - 2005 or NEBB procedures.																	x	
D36	B1c7e	Provide point to point testing of all equipment devices and graphics and commissioning in accordance with Section D8-Design and Construction Procedures.																		x
D36	B1c7f	Report conforming to AABC Test and Balance Procedures - 2005 or NEBB procedures.																	x	
D36	D1a1	Identification of a similar system in use in an existing facility for 5 years and manufactured by the existing controls system manufacturer															x			
D4	B6a	Fire protection areas identified														x				
D4	B6b	Fire protection zones indicated on the drawings with riser locations identified.																x		
D4	B6c	performance testing in accordance with code																	x	
D4	F3a	System layout indicating operator interface locations														x				
D4	F3b	System equipment locations indicated on the drawings and manufacturer's product data indicating products to be used															x			
D41	C3b1	Identification of water source														x				
D41	C3b3	Complete system layout showing all piping, devices and components. Provide hydraulic calculations and produ data cut sheets. Show coordination with ceiling, ductwork, lighting and structure																	x	
D41	C3b2	Water supply for sprinkler systems shown on the drawings.															x			

SUBSTANTIATION SUMMARY FORM

TITLE AND LOCATION
Energy Systems Integration Facility, National Renewable Energy Laboratory, Golden, CO

			TYPE OF SUBMITTAL											CLASSIFICATION		PROJECT PHASE				
SECTION	PARAGRAPH NUMBER	DESCRIPTION OF ITEM SUBMITTED	01 - PRECON SUBMITTALS	02 - SHOP DRAWINGS	03 - PRODUCT DATA	04 - SAMPLES	05 - DESIGN DATA	06 - TEST REPORTS	07 - CERTIFICATES	08 - MFRS INSTRUCTIONS	09 - MFRS FIELD REPORT	10 - O&M DATA	11 - CLOSEOUT SUBMITTAL	FOR INFORMATION ONLY	GOVERNMENT APPROVED	PreliminaryDesign	Design Development	Construction Documents	Construction	Commissioning/Close-out
D41	C3b4	Tests of each sprinkler system in accordance with the requirements of the design standard.																	x	
D41	E1a1	Identification of the system type to be installed														x				
D41	E1a2	Identification of a similar system in use in an existing facility for 3 years and consisting of components from the same manufacturers															x			
D43	A5a	Outline description of systems, inter-system interfaces and functions provided														x				
D43	A5b	Details of each type of input and output device; capacities of systems; manufacturer data															x			
D43	A5c	Detailed layout of input and output device locations																	x	
D43	A5d	Complete functional performance testing as specified i Commissioning																		x
D43	C8a	Performance tests approved by code authorities																		x
D45	A7a	Types, locations, and calculations of travel distances.															x			
D5	A5a	Conduct continuity test of wiring systems prior to functional performance test. Conduct functional performance test of wiring systems.																	x	
D5	E4c2a	Identification of circuits that require surge protection.														x				
D5	E4c2b	Description of surge protection devices to be used.															x			
D5	E4c2c	Measurement of voltage excursions on protected circuits.																	x	
D5	E8b1	Reliability evaluation calculated using the "minimal cut-set method" described by IEEE 493-1997															x			
D51	G2c1	Single-line drawings, power supply equipment sizes an types, equipment room sizes.															x			
D51	G2c2	Riser diagrams, calculations, equipment operating parameters.																x		
D51	H2g1	Single-line drawings, power supply equipment sizes an types, equipment room sizes															x			
D51	H2g2	Riser diagrams, calculations, equipment operating parameters.																x		
D51	H2i1	Single-line drawings, power supply equipment sizes an types, equipment room sizes															x			
D51	H2i2	Riser diagrams, calculations, equipment operating parameters.																x		
D52	E1e1	Single-line diagram, showing feeder and equipment sizes; required electrical room sizes															x			
D52	E1e2	Riser diagram and calculations																x		
D52	E1e3	Equipment characteristics																	x	
D52	E1e4	For each panelboard, balance current on each phase conductor within 15 percent.																		x
D53	B3a	Provide circuit layouts.															x			
D59	H1f1	Single line diagram showing feeder and equipment size and required electrical room sizes.															x			
D59	H1f2	Riser diagrams, layout, and calculations.																x		
D59	H1f3	Equipment Characteristics																	x	
D59	H1f4	Testing																		x
D61	B3c1	Calculations for representative spaces, prepared by a registered electrical engineer, and product data for lamps and luminaires.																x		
D61	B3c2	Measurements of quality of light for representative spaces throughout the project																	x	
D62	B1c1	Overall exterior lighting scheme, including types of luminaires and lamps															x			
D62	B1c2	Calculations of illuminance levels and uniformity ratios for representative exterior areas, prepared by a registered electrical engineer																x		

SUBSTANTIATION SUMMARY FORM

TITLE AND LOCATION
Energy Systems Integration Facility, National Renewable Energy Laboratory, Golden, CO

			TYPE OF SUBMITTAL											CLASSIFICATION		PROJECT PHASE				
SECTION	PARAGRAPH NUMBER	DESCRIPTION OF ITEM SUBMITTED	01 - PRECON SUBMITTALS	02 - SHOP DRAWINGS	03 - PRODUCT DATA	04 - SAMPLES	05 - DESIGN DATA	06 - TEST REPORTS	07 - CERTIFICATES	08 - MFRS INSTRUCTIONS	09 - MFRS FIELD REPORT	10 - O&M DATA	11 - CLOSEOUT SUBMITTAL	FOR INFORMATION ONLY	GOVERNMENT APPROVED	PreliminaryDesign	Design Development	Construction Documents	Construction	Commissioning/Close-out
D62	B1c3	Measurements of illuminance levels and uniformity ratios for representative exterior areas, with a report setting forth results after correcting for maintenance factors keyed to luminaire design and lamp types																	x	
D62	D3a	Identification of proven-in-use assemblies of the same type, for inspection by Owner.														x				
D62	D3b	Identification of actual products to be used.														x				
D7	C1a1	Testing of wiring systems for continuity, prior to functional performance testing; functional performance testing as per latest TIA/EIA/BICSI standards																	x	
D71	A6a	Provide a narrative description of systems, inter-system interfaces, and functions provided.														x				
D71	A6b	Details of each type of input and output device, capacities of systems, and manufacturer data. Provide calculations supporting room sizes, pathway sizing, and backbone sizing															x			
D71	A6c	Detailed layout of input and output device locations, riser diagram, cable tray routing, telecommunications room configurations, rack configurations, installation details, and grounding connection locations																x		
D71	A6d	Provide "As Built" documentation showing actual site conditions and installation as constructed																		x
D71	A6e	Balanced twisted pair cable testing																		x
D71	D2b1	Performance testing per latest TIA/EIA/BICSI standards.																		x
D72	A5a	Outline description of systems, inter-system interfaces and functions provided														x				
D72	A5b	Details of each type of input and output device; capacities of systems; manufacturer data															x			
D72	A5c	Detailed layout of input and output device locations																x		
D72	A5d	Complete functional performance testing as specified in Commissioning																		x
D73	A5a	Provide a narrative description of systems, inter-system interfaces, and functions provided.														x				
D73	A5b	Details of each type of input and output device, capacities of systems, and manufacturer data.															x			
D73	A5c	Detailed layout of input and output device locations, zoning, riser diagram, interfaces, rack configurations, installation details, and grounding connection locations																x		
D73	A5d	Perform tests as directed by manufacturer's specifications.																		x
D8	B11a8	Provide system architecture diagram, equipment cut sheets, preliminary wiring diagrams, system interfaces and sequences of operation.															x			
D8	B15a	1) Provide one-line diagrams of the systems and all the interconnection to other systems. Provide pipe size and load information. 2) Provide piping layout design including isolation valves and automatic change over valves. 3) Provide control diagrams and sequences of operation specifically outlining which controls are the SCADA controls and what are building DDC controls.														x				
D8	B15b	1) Final piping design layouts showing complete interconnection of all research piping loops and building system piping. 2) Complete control system diagrams identifying all points monitored and controlled. 3) Confirmation that the final design meets all the standards and safety requirements. 4) Provide equipment schedules, specifications and design criteria summary for all systems.															x			

SUBSTANTIATION SUMMARY FORM

TITLE AND LOCATION
Energy Systems Integration Facility, National Renewable Energy Laboratory, Golden, CO

			TYPE OF SUBMITTAL											CLASSIFICATION		PROJECT PHASE				
SECTION	PARAGRAPH NUMBER	DESCRIPTION OF ITEM SUBMITTED	01 - PRECON SUBMITTALS	02 - SHOP DRAWINGS	03 - PRODUCT DATA	04 - SAMPLES	05 - DESIGN DATA	06 - TEST REPORTS	07 - CERTIFICATES	08 - MFRS INSTRUCTIONS	09 - MFRS FIELD REPORT	10 - O&M DATA	11 - CLOSEOUT SUBMITTAL	FOR INFORMATION ONLY	GOVERNMENT APPROVED	PreliminaryDesign	Design Development	Construction Documents	Construction	Commissioning/Close-out
D8	B15c	1) Provide functional tests reports that all systems achieve the necessary temperature, flow, and pressure requirements. Provide documentation that the DI water quality is achieved at each outlet. Provide test and balance report for all hydronic and air systems. 2) Provide pressure testing and leak testing of complete hydrogen distribution systems. Test protocols shall be reviewed and approved NREL EMS office																	x	
D92	D8a	Provide a narrative description of systems, inter-system interfaces, and functions provided.														x				
D92	D8b	Details of each type of input and output device; capacities of systems; manufacturer data.															x			
D92	D8c	Detailed layout of input and output device locations, riser diagram, interfaces, rack configurations, installation details, and grounding connection locations.																x		
D92	D8c	Perform tests as directed by manufacturer's specifications and complete functional performance testing as specified in Section 8.9, under Commissioning																		x
D93	D1a1	Maintenance analysis.															x			
D93	D1a2	Maintenance schedule and instructions.																		x
D93	E1d1	Engineering analysis of actual grounding requirement and method of accomplishment.																		x
D94	C1c1	Tests to verify achievement of cathodic potential or polarization required by design; documentation of operating parameters in accordance with applicable NACE standard																		x
D94	C1c2	Maintenance instructions; include copy of applicable NACE design standards.																		x
D94	C1c3	After one month of full occupancy and activation of all services and again at the end of one year, tests to determine if AC or DC currents or potentials exist between buried metal elements and the ground; addition, replacement, or enhancement of cathodic protection as necessary to achieve protective effect.																		x
D99	A2a1a	Submit analysis and documentation of all process utility loads. Provide equipment lists summarizing all mechanical and electrical utilities and the associated load, flow rate, voltage, current and utility connections														x				
D99	C1a	functional testing of building HVAC, electrical and IT systems.																		x
D99A	A2a1a	Submit analysis and documentation of all process utility loads. Provide equipment lists summarizing all mechanical and electrical utilities and the associated load, flow rate, voltage, current and utility connections														X				
D99A	B5a1a	a) Provide one-line diagrams of all air and hydronic process, utility systems and heat recovery systems. b) Provide piping plans that show piping grid, branch take offs and interconnect to other laboratories with all control valves interface to the SCADA system. c) Provide SCADA system control schematic and sequence of operation that shows all monitoring and control points for all process utility systems.														x				
D99A	C4a1a	Submit a list of all hazardous materials, as well as quantities, located in laboratory. Provide all necessary building previsions to support the hazardous materials the lab and facility in general.																		

SUBSTANTIATION SUMMARY FORM

TITLE AND LOCATION
Energy Systems Integration Facility, National Renewable Energy Laboratory, Golden, CO

			TYPE OF SUBMITTAL											CLASSIFICATION		PROJECT PHASE				
SECTION	PARAGRAPH NUMBER	DESCRIPTION OF ITEM SUBMITTED	01 - PRECON SUBMITTALS	02 - SHOP DRAWINGS	03 - PRODUCT DATA	04 - SAMPLES	05 - DESIGN DATA	06 - TEST REPORTS	07 - CERTIFICATES	08 - MFRS INSTRUCTIONS	09 - MFRS FIELD REPORT	10 - O&M DATA	11 - CLOSEOUT SUBMITTAL	FOR INFORMATION ONLY	GOVERNMENT APPROVED	PreliminaryDesign	Design Development	Construction Documents	Construction	Commissioning/Close-out
D99A	D1a	Provide functional testing of all process utility systems. Provide start-up reports and commissioning of mechanical and electrical utilities and Research equipment. Provide test and balance report included in the operatio and maintenance manual																x		x
D99B	A5a1	Submit analysis and documentation of all process utility loads. Provide equipment lists summarizing all mechanical and electrical utilities and the associated load, flow rate, voltage, current and utility connections														x				
D99B	B1i1a	Provide SCADA system control schematic and sequence of operation that shows all monitoring and control points for all process utility systems. (Provide drawings indicating all major equipment in the lab, and how they are anticipated to be fed.														x				
D99B	F1a	Provide functional testing of all process utility systems. Provide start-up reports and commissioning of mechanical utilities, fuel systems, controls and data systems. Provide test and balance report included in the operatio and maintenance manual.																		x
D99C	A2a1a	Submit analysis and documentation of all process utility loads. Provide equipment lists summarizing all mechanical and electrical utilities and the associated load, flow rate, voltage, current and utility connections														x				
D99C	C1a1	Provide functional testing and commissioning reports f the data equipment and the performance of the HVAC and electrical system. Provide test and balance report included in the operatio and maintenance manual.																		x
D99D	A2a1a	Submit analysis and documentation of all process utility loads. Provide equipment lists summarizing all mechanical and electrical utilities and the associated load, flow rate, voltage, current and utility connections														x				
D99D	B2a1	Provide functional testing of building HVAC, electrical and IT. Provide test and balance report included in the operation and maintenance manual																		x
D99E	A3a1a	Submit analysis and documentation of all process utility loads. Provide equipment lists summarizing all mechanical and electrical utilities and the associated load, flow rate, voltage, current and utility connections														x				
D99E	C1a/b	Provide functional testing and commissioning reports f the data equipment and the performance of the HVAC and electrical system. Provide test and balance report included in the operatio and maintenance manual																		x
D99F	A2a1a	Submit analysis and documentation of all process utility loads. Provide equipment lists summarizing all mechanical and electrical utilities and the associated load, flow rate, voltage, current and utility connections														x				
D99F	D4a1	Submit a list of all hazardous materials, as well as quantities, located in the laboratory. Provide all necessary building provisions to support the hazardous materials in the lab and facility in general. Hazards include: Hydrogen, Lithium, lab-scale chemical use, lab scale use of toxic waste.															x			

SUBSTANTIATION SUMMARY FORM

TITLE AND LOCATION
Energy Systems Integration Facility, National Renewable Energy Laboratory, Golden, CO

			TYPE OF SUBMITTAL											CLASSIFICATION		PROJECT PHASE				
SECTION	PARAGRAPH NUMBER	DESCRIPTION OF ITEM SUBMITTED	01 - PRECON SUBMITTALS	02 - SHOP DRAWINGS	03 - PRODUCT DATA	04 - SAMPLES	05 - DESIGN DATA	06 - TEST REPORTS	07 - CERTIFICATES	08 - MFRS INSTRUCTIONS	09 - MFRS FIELD REPORT	10 - O&M DATA	11 - CLOSEOUT SUBMITTAL	FOR INFORMATION ONLY	GOVERNMENT APPROVED	PreliminaryDesign	Design Development	Construction Documents	Construction	Commissioning/Close-out
D99F	E1a/b	Provide functional testing of all process utility systems. Provide start-up reports and commissioning of mechanical utilities, electrical and research equipment. b. Provide test and balance report included in the operation and maintenance manual.																		x
D99G	A2a1a	a) Submit analysis and documentation of all process utility loads. Provide equipment lists summarizing all mechanical and electrical utilities and the associated load, flow rate, voltage, current and utility connections. b) Provide one-line diagrams of all air and hydronic process, utility systems and heat recovery systems. c) Provide piping plans that show piping grid, branch take offs and interconnect to other laboratories with all control valves interface to the SCADA system. d) Provide SCADA system control schematic and sequence of operation that shows all monitoring and control points for all process utility systems.														x				
D99G	C9a1	Submit a list of all hazardous materials, as well as quantities, located in the laboratory. Provide all necessary building provisions to support the hazardous materials in the lab and facility in general.																x		
D99G	F4a/b	Provide functional testing of all process utility systems. Provide start-up reports and commissioning of researc chilled water and research heating water loops and poi to-point testing of the entire SCADA control system an monitoring for mechanical utilities.Provide test and balance report included in the operation and maintenance manual.																		x
D99H	A3a1a	Submit analysis and documentation of all process utilit loads. Provide equipment lists summarizing all mechanical and electrical utilities and the associated load, flow rate, voltage, current and utility connections.														x				
D99H	B2a	1) Provide one-line diagrams of all air and hydronic process, utility systems and heat recovery systems. 2) Provide piping plans that show piping grid, branch take offs and interconnect to other laboratories with all control valves interface to the SCADA system. 3) Provide SCADA system control schematic and sequence of operation that shows all monitoring and control points for all process utility systems.														x				
D99H	C6a1	Submit a list of all hazardous materials, as well as quantities, located in the laboratory. Provide all necessary building previsions to support the hazardous materials in the lab and facility in general.																	x	
D99H	F4a/b	Provide functional testing of all process utility systems. Provide start-up reports and commissioning of researc chilled water and research heating water loops and poi to-point testing of the entire SCADA control system an monitoring for mechanical utilities.Provide test and balance report included in the operation and maintenance manual																		x
D99I	A2a1a	Submit analysis and documentation of all process utilit loads. Provide equipment lists summarizing all mechanical and electrical utilities and the associated load, flow rate, voltage, current and utility connections.														x				

SUBSTANTIATION SUMMARY FORM

TITLE AND LOCATION
Energy Systems Integration Facility, National Renewable Energy Laboratory, Golden, CO

			TYPE OF SUBMITTAL											CLASSIFICATION		PROJECT PHASE				
SECTION	PARAGRAPH NUMBER	DESCRIPTION OF ITEM SUBMITTED	01 - PRECON SUBMITTALS	02 - SHOP DRAWINGS	03 - PRODUCT DATA	04 - SAMPLES	05 - DESIGN DATA	06 - TEST REPORTS	07 - CERTIFICATES	08 - MFRS INSTRUCTIONS	09 - MFRS FIELD REPORT	10 - O&M DATA	11 - CLOSEOUT SUBMITTAL	FOR INFORMATION ONLY	GOVERNMENT APPROVED	PreliminaryDesign	Design Development	Construction Documents	Construction	Commissioning/Close-out
D99I	D1a/b	Provide functional testing of all process utility systems. Provide start-up reports and commissioning of researc chilled water and research heating water loops and poi to-point testing of the entire SCADA control system an monitoring for mechanical utilities.Provide test and balance report included in the operation and maintenance manual																		x
D99J	A3a1a	Submit analysis and documentation of all process utilit loads. Provide equipment lists summarizing all mechanical and electrical utilities and the associated load, heat release, voltage, current and utility connections														x				
D99J	B2a1	Submit preliminary control schematics of the SCADA system showing all systems to be controlled and monitored. Include details of the graphic dashboard monitoring stations														x				
D99J	D1a/b	Provide functional testing of all process utility systems. Provide start-up reports and commissioning of researc chilled water and research heating water loops and poi to-point testing of the entire SCADA control system an monitoring for mechanical utilities. Provide test and balance report included in the operation and maintenance manual.																		x
D99K	A3a1a	Submit analysis and documentation of all process utilit loads. Provide equipment lists summarizing all mechanical and electrical utilities and the associated load, heat release, voltage, current and utility connections														x				
D99L	A4a1a	Submit analysis and documentation of all process utilit loads. Provide equipment lists summarizing all mechanical and electrical utilities and the associated load, heat release, voltage, current and utility connections														x				
D99L	B1m1	a) Provide one-line diagrams of all air and hydronic process, utility systems and heat recovery systems. b) Provide piping plans that show piping grid, branch take offs and interconnect to other laboratories with all control valves interface to the SCADA system. c) Provide SCADA system control schematic and sequence of operation that shows all monitoring and control points for all process utility systems.														x				
D99L	C8a1	Submit a list of all hazardous materials, as well as quantities, located in the laboratory. Provide all necessary building previsions to support the hazardous materials in the lab and facility in general																x		
D99L	F4a	Provide functional testing of all process utility systems. Provide start-up reports and commissioning of researc chilled water and research heating water loops and poi to-point testing of the entire SCADA control system an monitoring for mechanical utilities. Provide test and balance report included in the operation and maintenance manual.																		x
D99M	A3a1a	Submit analysis and documentation of all process utilit loads. Provide equipment lists summarizing all mechanical and electrical utilities and the associated load, flow rate, voltage, current and utility connections														x				

SUBSTANTIATION SUMMARY FORM

TITLE AND LOCATION
Energy Systems Integration Facility, National Renewable Energy Laboratory, Golden, CO

			TYPE OF SUBMITTAL											CLASSIFICATION		PROJECT PHASE				
SECTION	PARAGRAPH NUMBER	DESCRIPTION OF ITEM SUBMITTED	01 - PRECON SUBMITTALS	02 - SHOP DRAWINGS	03 - PRODUCT DATA	04 - SAMPLES	05 - DESIGN DATA	06 - TEST REPORTS	07 - CERTIFICATES	08 - MFRS INSTRUCTIONS	09 - MFRS FIELD REPORT	10 - O&M DATA	11 - CLOSEOUT SUBMITTAL	FOR INFORMATION ONLY	GOVERNMENT APPROVED	PreliminaryDesign	Design Development	Construction Documents	Construction	Commissioning/Close-out
D99M	B4a	1) Provide one-line diagrams of all air and hydronic process, utility systems and heat recovery systems. 2) Provide piping plans that show piping grid, branch take offs and interconnect to other laboratories with all control valves interface to the SCADA system. 3) Provide SCADA system control schematic and sequence of operation that shows all monitoring and control points for all process utility systems. 4) Provide diagrammatic layout of the major equipment in the space.														x				
D99M	E1a	Provide functional testing of all laboratory equipment and process utility systems. Provide start-up reports and commissioning of systems including point-to-point testing of the controls. Provide test and balance report included in the operation and maintenance manual.																		x
D99N	A3a1a	Submit analysis and documentation of all process utility loads. Provide equipment lists summarizing all mechanical and electrical utilities and the associated load, flow rate, voltage, current and utility connections.														x				
D99N	C7a1	Submit a list of all hazardous materials, as well as quantities, located in the laboratory. Provide all necessary building previsions to support the hazardous materials in the lab and facility in general.																x		
D99N	D1a	Provide functional testing of all process utility systems. Provide start-up reports, commissioning and point-to-point testing of the laboratory equipment and control system operation. Provide test and balance report included in the operation and maintenance manual.																		x
D99O	A3a1a	Submit analysis and documentation of all process utility loads. Provide equipment lists summarizing all mechanical and electrical utilities and the associated load, flow rate, voltage, current and utility connections.														x				
D99O	B1p1	a) Provide one-line diagrams of all air and hydronic process, utility systems and heat recovery systems. b) Provide piping plans that show piping grid, branch take offs and interconnect to other laboratories with all control valves interface to the SCADA system. c) Provide SCADA system control schematic and sequence of operation that shows all monitoring and control points for all process utility systems. d) Normal power requirements: e) Provide convenience outlets at 6' minimum spacing on walls f) Provide power as required for equipment. G) Provide each research area with at least have 2 outlets each for 480 Vac, 208 Vac, 240 Vac and 6 outlets of 120Vac														x				
D99O	B1y1	a) Provide one-line diagrams of all mechanical and electrical systems supporting the laboratory. b) Provide plans that show piping and ventilation systems with branch take offs and interconnect to the main distribution and other laboratories with all valves, dampers and controls.														x				
D99O	C3a1	Submit a list of all hazardous materials, as well as quantities, located in the laboratory. Provide all necessary building previsions to support the hazardous materials in the lab and facility in general.																x		

SUBSTANTIATION SUMMARY FORM

TITLE AND LOCATION
Energy Systems Integration Facility, National Renewable Energy Laboratory, Golden, CO

			TYPE OF SUBMITTAL											CLASSIFICATION		PROJECT PHASE				
SECTION	PARAGRAPH NUMBER	DESCRIPTION OF ITEM SUBMITTED	01 - PRECON SUBMITTALS	02 - SHOP DRAWINGS	03 - PRODUCT DATA	04 - SAMPLES	05 - DESIGN DATA	06 - TEST REPORTS	07 - CERTIFICATES	08 - MFRS INSTRUCTIONS	09 - MFRS FIELD REPORT	10 - O&M DATA	11 - CLOSEOUT SUBMITTAL	FOR INFORMATION ONLY	GOVERNMENT APPROVED	PreliminaryDesign	Design Development	Construction Documents	Construction	Commissioning/Close-out
D99O	F2a1	Provide functional testing of all process utility systems. Provide start-up reports and commissioning of mechanical and electrical utilities and Research equipment. Provide test and balance report included in the operatio and maintenance manual.																		x
D99P	A2a1a	Submit analysis and documentation of all process utility loads. Provide equipment lists summarizing all mechanical and electrical utilities and the associated load, flow rate, voltage, current and utility connections.														x				
D99P	C7a1	Submit a list of all hazardous materials, as well as quantities, located in the laboratory. Provide all necessary building previsions to support the hazardous materials in the lab and facility in general.																x		
D99P	F1a	Provide functional testing of all process utility systems. Provide start-up reports, commissioning and point-to-point testing of the laboratory equipment and control system operation. Provide test and balance report included in the operation and maintenance manual.																		x
D99Q	A3a1a	Submit analysis and documentation of all process utility loads. Provide equipment lists summarizing all mechanical and electrical utilities and the associated load, flow rate, voltage, current and utility connections.														x				
D99Q	B2a	1) Provide one-line diagrams of all air and hydronic process, utility systems and heat recovery systems. 2) Provide piping plans that show piping grid, branch take offs and interconnect to other laboratories with all control valves interface to the SCADA system. 3) Provide SCADA system control schematic and sequence of operation that shows all monitoring and control points for all process utility systems.														x				
D99Q	C7a1	Submit a list of all hazardous materials, as well as quantities, located in the laboratory. Provide all necessary building previsions to support the hazardous materials in the lab and facility in general.																x		
D99Q	F4a/b	a) Provide functional testing of all process utility systems. Provide start-up reports and commissioning research chilled water and research heating water loop and point-to-point testing of the entire SCADA control system and monitoring for mechanical utilities. B) Provide test and balance report included in the operatio and maintenance manual.																		x
D99R	A2a1a	Submit analysis and documentation of all equipment an utility loads. Provide equipment lists summarizing all mechanical and electrical utilities and the associated load, heat release, voltage, current and utility connections.														x				
D99R	C1a	Provide functional testing of building HVAC, electrical and IT systems.																		x
D99S	A3a1a	Submit analysis and documentation of all process utility loads. Provide equipment lists summarizing all mechanical and electrical utilities and the associated load, flow rate, voltage, current and utility connections.														x				
D99S	C1a/b	a) Provide functional testing of all laboratory equipment and process utility systems. Provide start-up reports and commissioning of systems including point-to-point testing of the controls. b. Provide test and balance report included in the operation and maintenance																		x

SUBSTANTIATION SUMMARY FORM

TITLE AND LOCATION
Energy Systems Integration Facility, National Renewable Energy Laboratory, Golden, CO

			TYPE OF SUBMITTAL											CLASSIFICATION		PROJECT PHASE				
SECTION	PARAGRAPH NUMBER	DESCRIPTION OF ITEM SUBMITTED	01 - PRECON SUBMITTALS	02 - SHOP DRAWINGS	03 - PRODUCT DATA	04 - SAMPLES	05 - DESIGN DATA	06 - TEST REPORTS	07 - CERTIFICATES	08 - MFRS INSTRUCTIONS	09 - MFRS FIELD REPORT	10 - O&M DATA	11 - CLOSEOUT SUBMITTAL	FOR INFORMATION ONLY	GOVERNMENT APPROVED	PreliminaryDesign	Design Development	Construction Documents	Construction	Commissioning/Close-out
D99TA	A3a1a	Submit analysis and documentation of all process utility loads. Provide equipment lists summarizing all mechanical and electrical utilities and the associated load, flow rate, voltage, current and utility connections														x				
D99TA	C3a1	Submit a list of all hazardous materials, as well as quantities, located in the laboratory. Provide all necessary building previsions to support the hazardous materials in the lab and facility in general																x		
D99TA	E1a/b	a) Provide functional testing of all laboratory equipment and process utility systems. Provide start-up reports and commissioning of systems including point-to-point testing of the controls. b) Provide test and balance report included in the operation and maintenance																		x
D99TB	A4a1a	Submit analysis and documentation of all process utility loads. Provide equipment lists summarizing all mechanical and electrical utilities and the associated load, flow rate, voltage, current and utility connections														x				
D99TB	C3a1	Submit a list of all hazardous materials, as well as quantities, located in the laboratory. Provide all necessary building previsions to support the hazardous materials in the lab and facility in general																x		
D99TB	E1a	Provide functional testing of all laboratory equipment and process utility systems. Provide start-up reports and commissioning of systems including point-to-point testing of the controls. Provide test and balance report included in the operation and maintenance manual.																		x
D99U	A6a1a	Submit analysis and documentation of all process utility loads. Provide equipment lists summarizing all mechanical and electrical utilities and the associated load, flow rate, voltage, current and utility connections														x				
D99U	D1	a) Provide functional testing of all laboratory equipment and process utility systems. Provide start-up reports and commissioning of systems including point-to-point testing of the controls. b. Provide test and balance report included in the operation and maintenance manual. c. Provide a certificate from an ISO17025 accredited lab for meeting a lab specification. d. Construction: Performance testing with 7-day trend log of temperature and humidity at a minimum of (8) locations in the space (at least 3x3 separation between locations, five locations in electrical room and three																		x
D99V	A3a1a	Submit analysis and documentation of all process utility loads. Provide equipment lists summarizing all mechanical and electrical utilities and the associated load, flow rate, voltage, current and utility connections														x				
D99V	C3a	Submit a list of all hazardous materials, as well as quantities, located in the laboratory. Provide all necessary building previsions to support the hazardous materials in the lab and facility in general																x		
D99V	F1a/b	a) Provide functional testing of all process utility systems. Provide start-up reports and commissioning mechanical and electrical utilities and Research equipment. b. Provide test and balance report included in the operation and maintenance manual																		x
D99W	A2a1	Submit analysis and documentation of all process utility loads. Provide equipment lists summarizing all mechanical and electrical utilities and the associated load, flow rate, voltage, current and utility connections														x				

SUBSTANTIATION SUMMARY FORM

TITLE AND LOCATION
Energy Systems Integration Facility, National Renewable Energy Laboratory, Golden, CO

			TYPE OF SUBMITTAL											CLASSIFICATION		PROJECT PHASE				
SECTION	PARAGRAPH NUMBER	DESCRIPTION OF ITEM SUBMITTED	01 - PRECON SUBMITTALS	02 - SHOP DRAWINGS	03 - PRODUCT DATA	04 - SAMPLES	05 - DESIGN DATA	06 - TEST REPORTS	07 - CERTIFICATES	08 - MFRS INSTRUCTIONS	09 - MFRS FIELD REPORT	10 - O&M DATA	11 - CLOSEOUT SUBMITTAL	FOR INFORMATION ONLY	GOVERNMENT APPROVED	PreliminaryDesign	Design Development	Construction Documents	Construction	Commissioning/Close-out
D99W	C9a	Submit a list of all hazardous materials, as well as quantities, located in the laboratory. Provide all necessary building previsions to support the hazardous materials in the lab and facility in general																x		
D99W	D1a/b	a) Provide functional testing of all process utility systems. Provide start-up reports and commissioning mechanical and electrical utilities and Research equipment. b. Provide test and balance report included in the operation and maintenance manual																		x
D99X	A2a1a	Submit analysis and documentation of all process utility loads. Provide equipment lists summarizing all mechanical and electrical utilities and the associated load, flow rate, voltage, current and utility connections														x				
D99X	C8a1	Submit a list of all hazardous materials, as well as quantities, located in the laboratory. Provide all necessary building previsions to support the hazardous materials in the lab and facility in general																x		
D99X	D1a/b	a) Provide functional testing of all process utility systems. Provide start-up reports and commissioning mechanical and electrical utilities and Research equipment. b. Provide test and balance report included in the operation and maintenance manual																		x
D99Y	A2a1a	Submit analysis and documentation of all process utility loads. Provide equipment lists summarizing all mechanical and electrical utilities and the associated load, flow rate, voltage, current and utility connections														x				
D99Y	C5a1	Submit a list of all hazardous materials, as well as quantities, located in the laboratory. Provide all necessary building previsions to support the hazardous materials in the lab and facility in general																x		
D99Y	D1a/b	a) Provide functional testing of all process utility systems. Provide start-up reports and commissioning mechanical and electrical utilities and Research equipment. b. Provide test and balance report included in the operation and maintenance manual																		x
D99Z	A2a1a	Submit analysis and documentation of all process utility loads. Provide equipment lists summarizing all mechanical and electrical utilities and the associated load, flow rate, voltage, current and utility connections														x				
D99Z	C6a	Submit a list of all hazardous materials, as well as quantities, located in the laboratory. Provide all necessary building previsions to support the hazardous materials in the lab and facility in general																x		
D99Z	D1a/b	a) Provide functional testing of all process utility systems. Provide start-up reports and commissioning mechanical and electrical utilities and Research equipment. b. Provide test and balance report included in the operation and maintenance manual.																		x
D99AA	A2a1a	Submit analysis and documentation of all process utility loads. Provide equipment lists summarizing all mechanical and electrical utilities and the associated load, flow rate, voltage, current and utility connections														x				
D99A	B1a1	Measurement and recording of temperature and humidity shall be documented and reviewed with owner and design team.																	x	

SUBSTANTIATION SUMMARY FORM

TITLE AND LOCATION
Energy Systems Integration Facility, National Renewable Energy Laboratory, Golden, CO

			TYPE OF SUBMITTAL											CLASSIFICATION		PROJECT PHASE				
SECTION	PARAGRAPH NUMBER	DESCRIPTION OF ITEM SUBMITTED	01 - PRECON SUBMITTALS	02 - SHOP DRAWINGS	03 - PRODUCT DATA	04 - SAMPLES	05 - DESIGN DATA	06 - TEST REPORTS	07 - CERTIFICATES	08 - MFRS INSTRUCTIONS	09 - MFRS FIELD REPORT	10 - O&M DATA	11 - CLOSEOUT SUBMITTAL	FOR INFORMATION ONLY	GOVERNMENT APPROVED	PreliminaryDesign	Design Development	Construction Documents	Construction	Commissioning/Close-out
D99AA	C3a1	Submit a list of all hazardous materials, as well as quantities, located in the laboratory. Provide all necessary building previsions to support the hazardous materials in the lab and facility in general																x		
D99A	D1a/b	a) Provide functional testing of all process utility systems. Provide start-up reports and commissioning mechanical and electrical utilities and Research equipment. b. Provide test and balance report included in the operation and maintenance manual																		x
E	D1a1	Identification of proven-in-use assemblies of the same type, for inspection by Owner														x				
E	D1a2	Identification of actual products to be used															x			
E1	C1a1	Identification of proven-in-use assemblies of the same														x				
E1	C1b1	Identification of actual products to be used.															x			
E11	D1a1	Identification of proven-in-use assemblies of the same type, for inspection by Owner														x				
E11	D1a2	Identification of actual products to be used															x			
G	B5e1	Site plans showing methods of achieving appearance requirements; renderings or sketches showing principa views described in requirements															x			
G	D1b1	Engineering design of any structural fills required.															x			
G	E4d1	Identification of types and thicknesses of paving and surfacing for various functions.														x				
G	E4d2	Proven-in-use documentation of paving and surfacing consistent with types of traffic anticipated; manufacturer's data may be submitted for modular paving units															x			
G	E4d3	Engineering calculations, based on anticipated weights and intensity of traffic																x		
G	E5c1	Engineering design of site drainage, including drainage volume calculations															x			
G	F2a1	Irrigation system design for required plant materials; estimated water use, by season and by year; explanation of conservation measures															x			
G	F2a2	Calculated water use based on final design and irrigation schedule																x		
G	F2a3	Field verification																		x
G	F4a	Identification of vehicular and pedestrian traffic surface and anticipated methods of snow removal															x			
G12	B1a1	Engineering design and estimate of longevity															x			
G2	B1b1	Identification of types of plants to be used, with any seasonal variations in appearance															x			
G21	D3a	Engineering calculations, stamped by a registered structural engineer																x		
G21	E3a	Identification of proven-in-use surfaces of the same type, for inspection by Owner															x			
G21	E3b	Computations to establish pavement strength and thickness, stamped by a registered civil or structural engineer																x		
G22	B1a2a	Identification of security barriers and method of achieving performance.															x			
G22	D1c1	Proven-in-use data.																x		
G23	B1f1	Annual irrigation program, with monthly schedules and interim procedures for plant establishment period.																		x
G23	D1a1a	Existing soil tests for pH, nutrients, and texture; identification of necessary soil amendments, or replacement with other suitable soil.															x			
G23	D1a1b	Soil tests of replacement soil.																	x	

SUBSTANTIATION SUMMARY FORM

TITLE AND LOCATION
Energy Systems Integration Facility, National Renewable Energy Laboratory, Golden, CO

			TYPE OF SUBMITTAL											CLASSIFICATION		PROJECT PHASE				
SECTION	PARAGRAPH NUMBER	DESCRIPTION OF ITEM SUBMITTED	01 - PRECON SUBMITTALS	02 - SHOP DRAWINGS	03 - PRODUCT DATA	04 - SAMPLES	05 - DESIGN DATA	06 - TEST REPORTS	07 - CERTIFICATES	08 - MFRS INSTRUCTIONS	09 - MFRS FIELD REPORT	10 - O&M DATA	11 - CLOSEOUT SUBMITTAL	FOR INFORMATION ONLY	GOVERNMENT APPROVED	PreliminaryDesign	Design Development	Construction Documents	Construction	Commissioning/Close-out
G23	D1a1c	Recommended fertilizer types and application rates for each type of plants.																		x
G23	E2e1	Overall landscape design scheme; evapotranspiration and precipitation data for project location; preliminary Potential Water Usage calculations.															x			
G23	E2e2	Proven-in-use data on plants for which plant factors les than 0.6, or other than those stated herein, have been used in calculations, showing survivability in the local climate.																x		
G23	E2e3	Reference evapotranspiration data for locality, source o real-time data, and instructions for calculating actual irrigation application based on daily evapotranspiration data.																		x
G3	D2b1	Details of supports, including engineering analysis															x			
G3	F1d1	Engineering calculations showing input- and output-sid capacities and loads and sizes of distribution elements															x			
G3	F1d2	Complete system details																x		
G3	F1d3	Functional performance testing																	x	
111	Subst F1	Where actual brand name products are not identified by either the Owner or the Design-Builder, identify the products to be used.																x		
111	Subst F2a	Where more than one product type is identified for a particular system, assembly, or element, identify exactl which type will be used.															x			
111	Subst F3b	For each product type, provide descriptive or performance specifications; early submittals may be brief specifications, but complete specifications must b provided prior to completion of construction documents															x			
111	Subst F2c	For each product type, identify at least one manufacture that will be used															x			
111	Subst F2d	For major manufactured products that are commonly purchased by brand name, provide manufacturer's product literature meets the specifications, including performance data and sample warranty															x			
111	Subst F3a	Identify actual brand name products used for every product, except commodity products specified by performance or description																	x	
111	Subst F3b	Where a product is specified by performance requirements with test methods, and if so specified, provide test reports showing compliance																	x	
D62	B2c1	Measurement of actual installation in accordance with procedures referenced in ANSI/IESNA RP-8-2000(R05																	x	

8.0 DESIGN AND CONSTRUCTION PROCEDURES

8.1 MANAGEMENT AND COORDINATION

8.1.1 Project Management

A. Meeting Notifications

1. The Subcontractor will be required to provide a minimum of three weeks notice for any and all meetings relating to the project. They will be responsible for notifying and coordinating all meetings with NREL and NREL's Representative.
2. Scheduled meeting changes within the three week window are not desirable for NREL.
3. The Subcontractor should provide timely notification of meeting cancellations.

B. Coordination with Occupants:

1. Existing Buildings on NREL Campus: NREL intends to continue to occupy existing and adjacent buildings and site during the construction period.
2. Existing Utility, Life Safety, and Fire Safety System Elements:
   a. All activities that require interruption of existing services or operations i.e. electrical power, gas, sewer, water, traffic, etc shall be scheduled with the NREL Project Manager at least two (2) weeks in advance.
   b. No disruption of services to areas that continue to be NREL occupied during normal operational hours. Disruptions during non-operational hours must be coordinated and arranged at a minimum of two (2) weeks in advance.
   c. Prevent accidental disruptions to facilities outside the project limits by investigation of existing utilities and protection of existing utilities during construction; remedy accidental disruptions at no cost to NREL.

C. Definitions of Design and Construction Phases or Stages

1. Preliminary Design: The process of finalizing the design criteria and preparing preliminary drawings and written descriptions to illustrate the proposed design of the work or a portion of the work to NREL.
   a. The end of the Preliminary Design period is a Milestone.
2. Design Development: The process of determining the form, arrangement, size, and materials of the work or a portion of the work.
   a. The end of Design Development occurs before the beginning of preparation of the associated construction documents.
   b. The end of Design Development for the project as a whole is a Milestone.
3. Construction Documents: The process of preparing working drawings, specifications, and other documents describing the work or a portion of the work in sufficient detail to allow accurate and complete construction.
   a. The end of Construction Documents for the project as a whole is a Milestone.
   b. The end of Construction Documents is the time at which all portions of the Construction Documents are complete.
4. Construction:
   a. The Construction period is the time from the issuance of Notice to Proceed until final acceptance by NREL.
5. Substantial Completion: As defined in the Subcontract Schedule (see Section 3 Article 2). Prerequisites are:
   a. Subcontractor's completed punch list of items requied for occupancy
   b. NRELs completed punch list of items requied to occupancy
   c. Compliance with requirements of governing authorities, for submittals, inspections, and permits
   d. Access to areas to be occupied by NREL

e. Final cleaning
f. Operations and Maintenance manuals have been provided to NREL
g. Warranties have been provided to NREL
h. Spare parts and extra materials have been provided to NREL
i. Maintenance supplies and tools have been provided to NREL
j. Project Record Documents have been provided to NREL
k. Final site survey is complete
l. Training of NREL's personnel is complete
m. Maintenance plan is complete
n. Keys and the keying schedule is complete
o. Compliance with all occupancy and life safety requirements
p. All major systems including safety systems are complete, functional and able to operate on all operational modes.

6. Closeout: The process of completing all details of both construction and commissioning.
   a. The Closeout period is the time from the date of Substantial Completion until Final Completion, both as defined by the Subcontract Schedule (see Section 3 Article 2).
   b. Before and during the Closeout period, NREL will ascertain whether the completed project complies with the subcontract documents.
7. Occupancy: The period during which the project is occupied for its intended purpose.
   a. The Occupancy period begins at the date of Substantial Completion.
   b. Move-in will occur before the end of Closeout.
8. Correction Period: Function and time frame as defined by the Subcontract Schedule.

D. Existing Operation(s):
1. Site Demolition and Development: The Subcontractor will be fully responsible for all site demolition.
2. Emergency Routes Required by Code: Maintained open during construction period.
3. Existing Site Access: Maintained open during construction period; protected from activities, kept clear of construction debris and stored materials, and with safe route surfaces in accordance with Manual on Traffic Control Devices – Department of Transportation (MO TCD-DOT).

E. Progress Documentation for NREL Information:
1. During Preliminary Design, Design Development, and Construction Documents Periods: Provide graphic displays sufficiently detailed to allow individual user groups to identify the status and organization of the design of their new spaces.
2. Weekly progress meetings shall be held to review preliminary through final design and during construction. All meetings shall be documented by the Subcontractor with copies provided to NREL.
3. The subcontractor shall update the NREL Project Manager weekly throughout the duration of the subcontract.

F. Progress Documentation for NREL's Project Record:
1. Prior to Construction: Digital photographic record documenting pre-construction conditions including existing buildings, structures, and other improvements in the vicinity of the work which might be damaged by construction operations.
2. During Construction: Digital photographic record of each portion of the work, taken from consistent locations, distances, and angles.
3. During Closeout: Detailed digital photographic record of each interior room and space, each exterior elevation, the roof, and the site immediate to the facility.
4. Photographs and Videos: Include the date taken, a short title of the view, and the compass orientation in each view; data must be in the actual photograph or frame, rather than added after printing (hand-printed lettering on an erasable marker board is acceptable).

G. PERMITTING The West Metro Fire Rescue Fire Prevention Bureau will issue a permit for all installations to the contractor of record. The permit is sole property or the subcontractor and may be transferred with written authorization of the Fire Marshal and the authorized subcontractor. All fees will be waived if submitted for initial shell / core / tenant finish review submittals.

8.2 DESIGN PROCEDURES

The information contained in this section applies to the design required after award of both the Phase I and Phase II Subcontracts.

A. The Subcontractor is required to fast-track the design and construction, that is, proceed with construction of parts of the site work and facilities prior to completion of the overall design. To facilitate fast tracking, the Subcontractor can divide the design into a maximum of ten (10) design packages per major facility type and maximum of four (4) design packages for site and associated work.

B. The Subcontractor is required to identify early procurement of long-lead item construction materials or installed equipment, prior to completion of the associated design package, if necessary to facilitate the project schedule. The Subcontractor will also identify how the long lead items will assure design integrity of the associated design package to meet the subcontract requirements. Once NREL is satisfied that the long-lead items meet the subcontract requirements, the Subcontract Administrator may allow the Subcontractor to procure the items at its own risk.

C. The Subcontractor may proceed with the construction work included in a separate design package after NREL has reviewed the final, 100% design submission for that package, review comments have been addressed and resolved to NREL's satisfaction, the Subcontract Administrator has agreed that the design package may be released for construction, and the construction prerequisites are complete.

8.2.1 DESIGNER OF RECORD

A. Identify, for approval, the Designer of Record ("DOR") that will be responsible for each area of design. One DOR may be responsible for more than one area. All areas of design disciplines shall be accounted for by a listed, Professional Registered DOR. The DOR's shall stamp, sign, and date each design drawing and other design deliverables under their responsible discipline at each design submittal stage.

B. The DOR(s) will also be responsible for maintaining the integrity of the design and for compliance with the subcontract requirements through construction and documentation of the as-built condition by coordination, review and approval of extensions of design, material, equipment and other construction submittals, review and approval or disapproval of requested deviations to the accepted design or to the subcontract, coordination with NREL of the above activities, and by performing other typical professional designer responsibilities.

8.2.2 PRE-WORK ACTIVITIES & CONFERENCES

A. Design Quality Control Plan

1. Submit for NREL Approval, a Design Quality Control Plan in accordance with Section 9.6 Quality Control Plan (QAP) before design proceeds.
2. Kick-Off Meeting: The Subcontractor will conduct a Kick-Off Meeting at the project site, as soon as possible after subcontract award. This will be coordinated with award of the subcontract. The Subcontractor and major lower tier representatives will participate. All designers need not attend this first meeting.
3. NREL representatives will include the NREL Integrated Project Team (IPT) members, end user representatives and NRELs' representative. The Subcontractor will provide an agenda, meeting goals, meeting place, and meeting time to participants prior to the meeting.
4. The post award conference shall include determination and introduction of contact persons, their authorities, subcontract administration requirements, discussion of expected project processes, and coordination of subsequent meetings for quality control
5. NREL will introduce the IPT, the end users and NRELs' representative. The Subcontractor will introduce major sub tiers, and other needed staff. Expectations and duties of each person shall be defined for all participants. A meeting roster shall be developed and distributed by NREL with

complete contact information including name, office, project role, phone, mailing and physical address, and email address.

B. Partnering & Project Progress

1. The initial Partnering conference may be scheduled and conducted by the Subcontractor at any time with or following award of Phase I of the subcontract. NREL proposes to form a partnership with the Subcontractor to develop a cohesive design and construction team. This partnership will involve NRELs' and Subcontractors team and it is preferable for a project of this size and complexity for the partnering sessions to be conducted by a third party (e.g. professional) facilitator to ensure effective communications.
2. This partnership will strive to develop a cooperative management team drawing on the strengths of each team member in an effort to achieve a quality project within budget and on schedule. This partnership will be bilateral in membership and participation will be totally voluntary. Normally, partnering meetings will be held at or in the vicinity of the project installation.
3. As part of the partnering process, NREL and Subcontractor will develop, establish, and agree to comprehensive design development processes including conduct of conferences, expectations of design development at conferences, fast-tracking, design acceptance, Interior Design, Furniture Fixtures & Laboratory Equipment (FF&LE) design approval, project closeout, etc.

C. Initial Design Conference

The initial design conference may be scheduled and conducted by the Subcontractor any time after award of Phase I of the subcontract, although it is recommended that the partnering process be initiated with or before the initial design conference. Any design work conducted after award of Phase I of the subcontract and prior to this conference should be limited to site and is discouraged for other items. All Designers of Record are required to participate in the conference. The purpose of the meeting is to present the Subcontractor's Proposal to NREL's team and to begin the verification process with NREL's end users. The Subcontractor will conduct the initial design conference.

D. Pre-Construction Conference

Before starting construction activities, the Subcontractor and NREL will jointly conduct a pre-construction administrative conference to discuss any outstanding requirements, construction safety procedures and expectations, and to review local installation requirements for start of construction. It is possible there will be multiple pre-construction conferences based on the content of the design packages selected by the Subcontractor. The Subcontractor will provide notice and minutes of this meeting to all participants.

8.2.3 STAGES OF DESIGN SUBMITTALS

The stages of design submittals described below define NREL expectations with respect to process and content. The Subcontractor will determine how to best plan and execute the design and review process for this project, within the parameters listed below.

A. Preliminary Design

1. Preliminary Design, if accepted by NREL, will lead to Phase II of the Subcontract. NRELs' full intent is to commit to the selected Subcontractor and work together as a team to assist the Subcontractor in verifying Section 5 Program, meeting Section 6 Performance Specifications and Section 7 Substantiation and negotiating NREL accepted "Trend Log" design and construction solutions.
2. NREL will not require a 50% design submittal of Preliminary Design. The submittal will be replaced with ""Over the Shoulder Reviews" described below. The Subcontractor will need to provide a review of the Preliminary Design per the Design Review Procedures below.
3. The purpose of Preliminary Design is to lower risk to the Subcontractor by supporting integrated design with NREL in order to provide a lower risk price proposal for the firm fixed price for Phase II. For Preliminary Design Package, the Subcontractor will need to determine which design and construction features are the highest risk and the percentage of design that needs to be completed in order to

cost/price these items that will lead to the Subcontractors firm fixed price for the Phase II of the subcontract.

4. The Subcontractor may determine some items need to be 100% complete in order to price and there for lower risk to themselves. Other items may need to be complete enough to obtain pricing from team partners such as the High Performance Computing Data Center or the MEP design and construction cost. The remainder of the high risk items may just need to be complete enough to obtain competitive bids on the open market.
5. It is up to the Subcontractor to determine what level or percentage of design will lower their pricing risk for the Part II subcontract. It is also up to the Subcontractor to submit the correct price for Preliminary Design to support the high level and intensity of design during Preliminary Design. The price and required supporting data will be identified by the subcontractor in Section 4 Business Submission Requirements.

B. Programming Verification

The Subcontractor will be required to verify the programming information during preliminary design with NREL. The programming verification may be simple or it may be complex with changes. Regardless of the complexity, this effort will be included within the preliminary design firm fixed price and needs to be accounted for within the overall firm fixed price given by the Subcontractor for Phase II of the subcontract, i.e. NREL will not allow for an escalation of cost due to complex programming verification. It is up to the subcontracting team to handle these changes through innovative design and construction solutions within overall project budget.

C. Research Equipment List

1. NREL has provided initial Laboratory and Research Equipment Lists in Section 5 Programming. The Subcontractor will be responsible for verifying this equipment list with NREL during preliminary design. The Subcontractor will be responsible for purchasing, installing all pieces of laboratory and research equipment as indicated on the list. The Subcontracting team will also be responsible for individual Lab and department "fit-ups" for both NREL and Subcontractor provided laboratory equipment. This includes verifying that all of the equipment in the building, the Laboratory and Research Equipment lists (including NREL provided equipment) will fit into the allowed spaces and square footage while still accomplishing the programming objectives of the labs and departments.
2. The Subcontractor will identify equipment that will require manufacturer training for the research staff and will include the training in purchase agreements.

D. Model Code and Reference Standards

1. The RFP provides a list of Model Codes and Reference Standard within Section 6 Performance Specifications. This are required Model Codes and References Standards, however, NREL understands that there may be conflicts between the documents or a better code or reference standard that will support the Subcontractors design and construction solution. NREL also wants to prevent disagreement over interpretations of the code which may delay the project. Accordingly, the Subcontract team will provide their version of the Model Codes and Reference Standards to be used on the project 30 days after subcontract award.
2. NREL is the Authority Having Jurisdiction (AHJ). Where appropriate, NREL refers to the West Metro Fire District.
3. Thirty (30) days after subcontract award the Subcontractor will organize a meeting between their team and the AHJ to review both the Model Code and Reference Standards provide in the RFP and the Subcontractors list of Model Code and Reference Standards for their particular design and construction solution. The purpose of this meeting is to indentify conflicts or discrepancies between the Codes and References Standards, resolve interpretations of the Codes and Reference Standards, and any differences between NREL list and the Subcontractors list. NREL and Subcontractor will then jointly craft a mutually approved list of Model Codes and Reference Standards for this facility. NREL,

as the AHJ, shall make the final determination. The determination will be based on the following hierarchy: a) human health and safety, b) environmental protection, c) property protection.

4. Conflict or discrepancies in code discovered after the model code is set will be resolved in a similar collaborative manner. NREL understands the need for resolution of an issue in a timely manner to prevent schedule delays and will make every reasonable effort for a quick resolution.

E. Fast Track Design Packages

1. On prior projects NREL has had success with the fast-track design package submittal process. The Subcontractor is encouraged to evaluate the process described in items 1, 2 and 3 below to see if it will fit within their own fast-track design concept. If the Subcontractor determines a need for additional design packages to support fast-track, this is acceptable but must follow the concept below for the design review process.
2. Design Package 1 (DP1) – After award of Phase II of the subcontract, the Subcontractor will submit a Civil, Site, Foundations and Infrastructure package to NREL for review and comment. Based upon lessons learned and past experience, this package is the easiest to manage and complete.
3. Design Package 2 (DP2), Core and Shell is the next package that is to be submitted by the Subcontractor for review by NREL. Based upon lessons learned and past experience, this package will require a strong amount of attention by the Subcontractor to manage the information presented to NREL, and then incorporate comments. Due to Fast-Tracking, the Subcontractor will be responsible for resolving and incorporating these comments in a way that does not delay the project.
4. Design Package 3 (DP3) Construction Documents for the remainder of the facility is the final package the Subcontractor will submit to NREL for review. This is anticipated to be a more difficult package as NREL's team will see the design in its entirety and fully complete. NREL expects that their team may realize more design or construction issues with this package compared to the others. It is up to the Subcontractor to manage the presentation of this information to NREL and then to resolve and incorporate comments.

F. Design Review Process

NREL has developed a distinct and collaborative review process that will be required of this project. Experience has shown that reviewing the documentation in isolation from the Subcontractor is time consuming and ineffective. Accordingly, the Subcontractor will be responsible for organizing, managing and coordinating the following process:

1. Throughout design and construction, NREL will be given 14 calendar days to review information submitted by the Subcontractor. The Subcontractor is responsible for this time allowance within their schedule.
2. Day 1 – The Subcontractor will provide an oral presentation to NREL of the package being presented for review. This presentation usually lasts between one to three hours and the Subcontractor will be responsible for providing content that clarifies information for NREL.
3. Days 2 – 10 – NREL will review the presented package and provide conformance review comments. NREL understands that their main job in the review is to make sure the Subcontractors solution meets the RFP documents through a Conformance Review and/or Verification Review.
4. Day 11 - Day 11 the Subcontractor will provide a full day workshop, if necessary, between NREL and the Subcontractor. The sole purpose of this workshop will be to resolve all comments from NREL in a face-to-face situation where concerns can be discussed open and resolution to the comments achieved. The Subcontractor will organize the workshop by discipline, i.e. the structural lower-tier will meet at one table the mechanical lower-tier at another.

G. Day 12-14 will be set aside to resolve any remaining comments that were not resolved during the workshop.

H. Design Complete Submittals

After the final design submission and review conference for a design package, the Subcontractor will revise the design package to incorporate the comments generated and resolved in the final review conferences, perform and document a back-check review and submit the final, design complete documents which shall represent documents ready to release for construction. NREL will provide a written release for construction for the completed package.

I. Trend Logs

1. As design progresses there may be needed changes to the design, or innovation opportunities after subcontract award to take advantage of the best possible price solution. For these and other reasons, NREL will require a Trend Log from the Subcontractor.
2. In Section 4.12 Submission Requirements, the Subcontractor is required to provide with their proposal a conceptual price breakdown per the Uniformat to Level 3 Assemblies, Form: Uniformat Proposal Estimate. The purpose of this price breakdown is to identify an initial cost baseline from which trend log items can be compared and evaluated. NREL understands the actual firm fixed price for design development and construction will not be established until award of Phase II design development and construction. The Trend Log will allow NREL and Subcontractor to evaluate different solutions to the project requirements before finalizing changes.
3. The Subcontractor will create and manage the Trend Log and provide it to NREL once a month, or as requested.

J. Over-the-Shoulder Progress Reviews

1. To facilitate a streamlined design-build process, NREL and Subcontractor may agree to one-on-one reviews or small group reviews, electronically, on-line, if available within the Subcontractor's standard design practices, or at the Subcontractor's design offices or other agreed location, when practical to the parties. The Subcontractor will coordinate such reviews with NREL and NREL's Representative to minimize or eliminate disruptions to the design process. Any data required for these reviews shall normally be provided in electronic format.
2. NREL and Subcontractor will establish and implement an effective, mutually agreeable partnering procedure for regular, weekly, over-the shoulder review procedures that allow NREL reviewers the opportunity to keep fully informed of the progress, contents, design intent, design documentation, etc. of the design packages.
3. NREL and NREL's Representative(s) will perform code and subcontract conformance reviews, and the Subcontractor is encouraged to partner with the reviewers to find ways to facilitate this process and to facilitate meeting or bettering the design-build schedule. The Subcontractor will maintain a fully functional configuration management system as described herein to track design revisions, regardless of whether or not there is a need for a formal intermediate design review.

K. Holiday Periods for NREL Review or Actions

The Subcontractor will not schedule meetings, NREL reviews or response due dates during the last two weeks of December or other designated NREL Holidays (see Section 3 Article 19) and will exclude such dates and periods from any durations specified herein for NREL actions.

L. Late Submittals and Reviews

If the Subcontractor cannot meet its scheduled submittal date for a design package, NREL will be advised in writing of the revised date, at least one (1) week prior to the submittal, in order to accommodate NREL reviewers' other scheduled activities. If a design submittal is over one (1) day late in accordance with the latest revised design schedule, or if notification of a proposed design schedule change is less than seven (7)

days from the anticipated design submission receipt date, NREL review period may be extended up to seven (7) days due to reviewers' schedule conflicts.

M. Specifications

Provide all specification to NREL using CSI's Master Format. If the Master Format does not include Metrology Labs specifications, then use NCSLI-RP-7 "Laboratory Design-Recommend Practice".

N. Design Quality Control

The Subcontractor will develop and maintain effective, acceptable Design Quality Control (DQC) procedures to control and track all revisions to the design documents after the Subcontract award through submission of the As-Built documents. See Section 8.5 Quality Control for the requirements.

O. Substantiation

NREL has provided a list of minimum Substantiation required in Section 7, Substantiation. This list is based upon the Performance Specifications in Section 6 Performance Specifications. NREL provided list is a basis for Substantiation and then Design Quality Control. It is the responsibility of the Subcontractor to verify this list and as design solutions and decision are made by the Subcontractor to add additional substantiation or additional design quality control items.

P. Conference Documentation

1. In order to facilitate and accelerate NREL code and subcontract conformance reviews, the Subcontractor shall identify, track resolution of, and maintain all comments and action items generated during the design process and make this available to the designers and reviewers.
2. The Subcontractor will prepare meeting minutes and will enter final resolution of all comments. Copies of comments, annotated with comment action agreed on, will be made available to all parties before the conference adjourns. Unresolved problems will be resolved by follow-on actions.
3. NREL reserves the right to reject design document submittals if comments are significant. Participants shall determine if any comments are critical enough to require further design development prior to NREL concurrence. Participants shall also determine how to proceed in order to obtain NREL concurrence with the design work presented.

Q. Design Analysis

1. The designers of record shall prepare and present design analyses with calculations necessary to substantiate and support all design documents submitted.
2. The Subcontractor will submit the final geotechnical evaluation report, reports of soil borings and any other foundation investigations performed in support of design of site work, utilities, foundations, etc. with the appropriate design package(s).

R. LEED Documentation:

1. NREL is requiring LEED™ Gold (Platinum achievable) certification from USGBC. The Subcontractor is required to provide documentation that is able to withstand USGBC scrutiny and be able to earn claimed LEED™ points. The Subcontractor will assign a LEED™ Accredited Professional, responsible to track LEED™ planning and performance for each LEED™ credit.
2. Document LEED™ credits in the plans, specifications and design analyses. All project documentation related to LEED™ shall conform to USGBC requirements for both content and format, including audit requirements and be separate from other design analyses. The Subcontractor will maintain and update the LEED™ Project Checklist throughout the project. Use the LEED™ Letter Templates. The designers of record shall prepare and present LEED™ documentation with calculations and other data necessary to substantiate and support all design documents submitted.

S. Design Advisory Board

The Design Advisory Board (DAB) is a community group which provides advice and counsel to NREL regarding facility planning documents, planning activities and construction projects. Specifically the DAB provides the following activities:

1. Advises NREL on plans related to facilities and site development, both short and long range.
2. Review proposed designs for NREL facilities for compatibility with NREL's most current design standards, site development plans, and similar documents.

The Subcontractor will provide advice and recommendations to NREL via written minutes or other correspondence and may be required to provide design presentations to the DAB. Throughout the ESIF project evolution the DAB will be involved in reviewing the project and providing recommendations for the design and construction of the project.

8.2.4 FINAL DESIGN REVIEWS AND CONFERENCES

A. A final design review and review conference will be held upon completion of final design at the project installation, or – where equipment is available - by video teleconference or a combination thereof, for any design package to receive NREL acceptance to allow release of the design package for construction. For smaller separate design packages, the parties may agree on alternative reviews and conferences (e.g., conference calls and electronic file sharing, etc.) through the Partnering process.

B. The Subcontractor will include the final design conference in the project schedule and shall indicate what part of the design work is at 100% completion. The final design conference will be held after NREL has had up to seven (7) calendar days after receipt of the submission to review the final design package and supporting data. For smaller packages, especially those involving only one or a few design disciplines, the parties may agree on a shorter period.

8.2.5 FINAL DESIGN REQUIREMENTS

Final design deliverables for a design package shall consist of 100% complete drawings, specifications, submittal register and design analysis for NREL review and acceptance. The 100% design submission shall consist of drawings, specifications, and design analysis and any permits required by the Subcontract for each package submitted. In order to expedite the final design review, prior to the conference, the Subcontractor will ensure that the design configuration management data and all review comment resolutions are up-to-date. The Subcontractor will also have performed independent technical reviews and back-checks of previous comment resolutions.

A. Interior Design Performance Requirements:

1. The first objective of the Interior Design is to ensure that the plan is appropriate for and in support of the function of the facility. The second is to help create an environment that enhances the facility's public image and promotes employee morale, while implementing solutions that are durable, cost effective, environmentally sensitive, and easy to maintain and support life safety.
2. The design approach taken by the design-build team should provide a sense of space and place, provide appropriate use of finishes and design elements, create a sense of visual organization, be low maintenance, and support a comfortable and friendly environment. The design must demonstrate a cohesive design plan from building finishes through furniture, signage, artwork and accessories.
3. Color, pattern and texture are to be used in a logical manner to provide for way-finding and to enhance the interior space. Standardization of materials is highly desirable to ensure ease of maintenance, repair and replacement. Permanent architectural features are to remain neutral in color. Accent colors may be used in a limited, constrained capacity. Avoid large geometric or rigid patterns.
4. Durability and cost are major factors in the selection of interior materials. Provide products that can be easily cleaned using solvent-free, water-based cleaners. Products with greater longevity and that are cost-effective over their anticipated life cycle are desired.
5. Consider safety in the selection of all materials. Provide products with a Class A or Class I rating even

when a lower class is allowed by NFPA 101. All adhesives will be water-based, non-toxic and emit no or low-level VOCs. Application of materials and finishes will comply with ADA regulations.

B. Interior and Exterior Design Performance Requirements

1. The Interior and Exterior Design includes selection, specification and coordination of interior finish materials that are integral to or attached to the building structure such as walls, floors, ceilings, window treatments, built-in furnishings and signage, along with coordination of finishes for installed equipment attached to the building, specialty lighting, doors, windows and trim. The design will also include a comprehensive signage package to include directions, room identification signs, fire escape plans and department identifications. Interior signage must comply with ADA and NFPA requirements.
2. Present original sets of the interior and exterior design scheme to reviewers at the end of Preliminary Design. Comments from NREL are to be incorporated and presented in the applicable Design Package. Each submittal will include the following:
   a. Interior Finishes Color Boards - The Color Board scheme will include original color samples of the following:
      i. All wall finishes, including information regarding tile patterns.
      ii. All flooring finishes, including information regarding tile patterns.
      iii. All ceiling finishes.
      iv. All millwork materials and finishes (cabinets, counter tops, etc.)
      v. All window treatments (sills, blinds, etc.)
      vi. All signage colors including background inserts, text and frame.
      vii. Each item on the Color Boards will be identified and keyed to the floor plans to provide a clear indication of how and where each item will be used.
   b. Interior Finish Legend: Provide an Interior Finish Legend that is keyed to the Color Boards that lists the item code, product type, manufacturer, patter/color, size and general location used in the building.
   c. Interior Signage Plans and Schedules: Include Interior Signage Plans showing location and quantities of all interior signage. Each interior sign will be keyed to a quantitative list indicating size, quantity of each type and signage text.
   d. Interior Room Finish Schedule: Provide an Interior Room Finish Schedule listing each room number, room name, floor finish, wall base, ceiling material and finish and a notes column for additional information. The schedule will also be included in the Working Drawings.
   e. Additional Drawings: Provide any additional drawings needed to communicate the design concept including interior elevations, floor patterns, wall tile patterns and millwork that are part of the Working Drawings.
   f. Exterior Finishes: As part of the design, prepare original sets of exterior finishes color boards in similar format as the interior finishes color boards. The exterior finishes boards will include original color samples of all exterior finishes including the following:
      i. All exposed roof finishes
      ii. All exterior wall materials whether they are stone, brick or other approved material.
      iii. All glass color samples
      iv. All exterior metals finishes
      v. All window and door frame finishes
      vi. All specialty item finishes, including trim.
      vii. Identify each item on the exterior finishes color boards and key to the building elevations to provide a clear indication of how and where each item will be used.
   g. Exterior Finish Legend: Provide an Exterior Finish Legend that is keyed to the Color Boards that lists the item code, product type, manufacturer, patter/color, size and general location. The schemes will include four sets of color boards, which will be provided along with Working Drawing

submittals, complying with the following requirements:

i. Color boards will reflect all actual finish textures, patterns, and colors required for this Subcontract.
ii. Materials will be labeled with the finish type, manufacturer's name, and pattern and color reference.
iii. Samples will be on size A4 or 8 1/2 by 11 inch boards and will be submitted in 3-ring binders.
iv. Samples for these color boards are required in addition to samples requested in other specification sections.
v. Each item on the Color Boards will be identified and keyed to the floor plans to provide a clear indication of how and where each item will be used.

C. Furniture, Fixtures & Laboratory Equipment (FF&LE) Requirements

1. Laboratory Equipment and Furniture Plans

a. The Subcontractor will provide Furniture, Fixture and Laboratory Equipment (FF&LE) Plans showing all laboratory equipment and furniture indicated on the equipment lists and performance specifications. The plans will depict dimensionally accurate plan views of laboratory equipment and furniture to ensure the product has the necessary space allocation and clearances.

b. Laboratory Equipment and Furniture Plans are to be used to coordinate installation of equipment, electrical connections, light fixtures, telecommunications and structural support for wall-mounted furnishings. Generally, systems furniture and casework will be freestanding.

c. Laboratory Equipment and Furniture Plans are to be provided as part the Preliminary Design Submittal.

d. Prepare and submit for approval the Furniture, Fixtures & Equipment Package. Present original sets of the scheme to reviewers at Preliminary Design. Comments from the NREL are to be incorporated and presented in Design Package 2.

2. Laboratory Equipment and Furniture Placement Plans

Provide Laboratory Equipment and Furniture Placement Plans showing locations and quantity of all freestanding items proposed for the building. Key or label all items according to a symbol indicating the type of item, and ensure all symbols correspond to the Illustration Sheets/Order Data Sheets.

3. Cut Sheets

a. Provide Laboratory Equipment and Furniture Cut Sheets; include furnishing item number which keys the product to the Laboratory Equipment and Furniture Placement Plans for each item in the FF&LE Package. Cut sheets are to have only one item per page and will include the following information: The job name, location, date and a picture of the product specified. Include specification data.

b. Cut Sheets will include the job name, location, date, manufacturer, manufacturer contact information, model number, dimensions, product description, fabric, finish, item quantity, unit cost, extended cost and any special information.

c. When the Furniture Cut Sheets are combined into one, furniture finishes and fabric samples may be presented along with a photo or line drawing of the furnishing item

d. Location Matrix: Provide a comprehensive list giving all occurrences of the item, broken down by room (this can be included on the Cut Sheet, or provided in spreadsheet format).

4. Furniture Fixtures & Equipment Package Format

a. The FF&LE will be presented in a 3-ring binder.

b. Provide a Table of Contents and tabs for all contents.

c. Furniture finishes and fabrics will be submitted on the individual Furniture Cut Sheet or Furniture Color Boards. When color boards are provided, they will reflect all actual fabrics, finish textures,

patterns, and colors. Color boards will fit into the three ring binders.

D. Drawings

1. Submit drawings complete with all subcontract requirements incorporated into the documents to provide a 100% design for each package submitted. Drawings will be logically organized and easily referenced.

E. Drawings shall be complete. The Subcontractor is encouraged to utilize graphics, views, notes, and details which make the drawings easier to review or to construct.

F. CADD System

1. NREL requires all drawing to be submitted per the NREL Site Operations Computer Aided Design Manual, Revision 4 July 2007. This document is provided in Section 9.8 of the RFP. In addition to the native CADD design files, provide separate electronic drawing files (in editable CADD format and Adobe Acrobat PDF version 6.0 or higher) for each project drawing. Each file (both CADD and PDF) shall represent one complete drawing from the drawing set, including the date, submittal phase, and border.
2. Each drawing file shall be completely independent of any data in any other file, including fonts and shapes not included with the basic CADD software program utilized. Drawing files with external references or special fonts are not acceptable. All displayed graphic elements on all levels of the drawing files shall be part of the project drawing image. The drawing files shall not contain any graphic element that is not part of the drawing image.
3. All Civil Drawings shall be delivered to NREL in a condition to be integrated into the NREL Master set without modification. Coordinate with Site Operations after subcontract award.

G. Drawing Index

Provide an index of drawings sheet in CADD as part of the drawing set, and an electronic list in Microsoft Excel of all drawings on the CD. Include the electronic file name, the sheet reference number, the sheet number, and the sheet title, containing the data for each drawing.

H. Hard Copies

Submitted hard copy drawings shall be plotted directly from the "electronic drawing files" and copied for quantities and sizes indicated in the distribution list at the end of this specification section. The original hard copy sheets shall be stamped and signed by the Designers of Record for Released for Construction, and copies provided for distribution from this set.

I. Building Information Modeling (BIM)

The Subcontractor may utilize BIM technology for NREL projects, however NREL does not currently utilize BIM so all drawings must come to NREL using Auto CADD 2008. Should the Subcontractor choose to utilize BIM, the BIM must be compliant with the latest version of the Industry Foundation Classes (IFC) as established by the International Alliance for Interoperability (IAI). The IFCs provide a standard format for BIM to allow sharing of information between domain and discipline software systems.

J. Interoperability

The Models shall be in a format that is .ifc compatible and can generate two dimensional and .dwg and .rvt formats, and scalable in standard units of measure. In addition, Subcontractor shall provide a common point of origin and all Models will be modeled off this common point of origin. All models shall be translated to a neutral file (.ifc) format and native format at handover.

K. 3D Coordination / Virtual Design and Construction

The Models (in plan view) shall extend to five feet beyond the exterior walls of the building. Where portions of the Work connect to existing structures/infrastructure, the plan limits shall extend to five feet beyond the point of connection. The Model elements shall be three-dimensional, dimensionally-accurate

and object-based (except where this Exhibit otherwise allows nominal dimensions, in which case nominal dimensions may be used). Model shall be the basis for the construction documents and utilized for design and construction coordination. The Subcontractor shall coordinate the building systems within the Model.

L. Model Components:

1. Architectural: Include the following architectural scope in the Models:
   a. All exterior walls, doors, windows, steps, railings and roofs.
   b. All interior walls (studs and individual layers of drywall need not be modeled).
   c. Risers and sloped floors.
   d. Interior doors and windows.
   e. All interior ceilings, soffits, stairs and railings.
   f. Walls, ceilings and soffits will be modeled as the overall thickness, including elevation changes and termination points.
   g. Doors, windows and frames will be modeled, including leaves, but excluding hardware.
   h. Light fixtures will be modeled to overall height, width, depth and access through interstitial space.
   i. Elevator shaft clear space, including clear width, depth and height only. Elevator cabs, equipment, etc. will not be modeled.
   j. Major equipment.
   k. Casework and millwork.
2. Structural: Include the following structural scope in the Models:
   a. All cast-in-place concrete, including all penetrations and openings identified in the construction documents.
   b. Edges of all slabs and penetrations of structural systems.
   c. All primary and secondary structural steel members, including standard steel member sizes, gusset plates, braces, equipment supports and kickers. Reinforcing steel and embeds need not be modeled.
   d. Metal and concrete decks will be modeled as to their overall thickness. Bolts, clip angles, etc. need not be modeled.
3. HVAC: Include the following HVAC scope in the Models:
   a. All ducts and air handling equipment.
   b. Equipment to its overall height, width and depth.
   c. Any piping associated with mechanical equipment.
   d. Any electrical associated with mechanical equipment.
   e. The intent of the Models is to show the ductwork and piping in as true a representation of the actual condition at construction completion as is reasonably possible.
4. Electrical: The following electrical scope shall be included in Design Models:
   a. Conduits 1" or greater and smaller conduits if in ganged runs.
   b. Cable tray, access zones and equipment.
   c. Light fixture locations and space requirements.
   d. All power pricets to equipment and all switch gear. Switches and outlet locations shall be modeled in areas where coordination with architectural finish floor elevation or interior elevations are of concern.
5. Plumbing: The following plumbing scope shall be included in the Models:
   a. All plumbing piping and gas piping, including specialty gas, access zones and equipment.
   b. Pipe slope shall be modeled. Fittings and connections need not be modeled.
   c. All plumbing equipment, to its overall height, width and depth.
   d. All valves and cleanouts, along with access to valves/cleanouts.
6. Fire Protection (Sprinkler and Alarm): The following fire protection scope shall be included in the Models:

a. All components of the fire protection system, including (but not limited to) piping, valves, fire pump and sprinkler heads.
b. Any access zone requirements

M. Design Analysis

The designers of record shall prepare a design analysis with calculations necessary to validate and support all design work submitted. For parts including site work, include site specific civil calculations. For parts including structural work, include structural calculations. This information to be included in the drawing set on separately identified and labeled sheets. The responsible DOR shall stamp, sign and date the design analysis. Generally, provide design analyses, individually, in an original (file copy) and one copy for the assigned NREL reviewer. Do not combine multi-disciplined volumes of design-analysis, unless multiple copies are provided to facilitate multiple reviewers, one copy per each separate design analysis included in a volume.

N. Specifications

Provide Specifications to NREL using CSI's Masterformat. Specifications shall be 100% complete and in final form.

O. Acceptance and Release for Construction

1. At the conclusion of the Design Package reviews, after resolutions to the comments have been agreed upon between DOR and NREL reviewers, the Subcontract Administrator will accept the Design Package submission in writing and allow construction to start for that design package. NREL may withhold acceptance until all major corrections have been made or if the final design submission requires so many corrections, even though minor, that it isn't considered acceptably complete.
2. NREL review and acceptance of design submittals is for subcontract conformance only and shall not relieve the Subcontractor from responsibility to fully adhere to the requirements of the subcontract, including the Subcontractor's accepted subcontract proposals or limit the Subcontractors responsibility or limit NREL's rights under the terms of the subcontract. NREL reserves the right to rescind inadvertent acceptance of design submittals containing subcontract deviations not separately and expressly identified in the submittal for NREL consideration and approval.

8.2.6 DESIGN COMPLETE CONSTRUCTION DOCUMENT REQUIREMENTS

A. After the Final Design Submission and Review Conference and after NREL acceptance of the Final Design, the Subcontractor will revise the design documents for the design package to incorporate the comments generated and resolved in the final review conference, perform and document a back-check review and submit the final, design complete documents.

B. The deliverable includes all documentation and supporting design analysis in final form, as well as the final review comments, disposition and the back-check. As part of the quality assurance process, NREL may perform a back-check of the released for construction documentation. The Subcontractor will promptly correct any errors or omissions found during NREL back-check. NREL may withhold retainage from progress payments for work or materials associated with a final design package until this submittal has been received and NREL determines that it is complete.

8.2.7 SUBMITTAL DISTRIBUTION, MEDIA AND QUANTITIES

A. Submittal Distribution and Quantities

1. General: The documents which the Subcontractor will submit to NREL for each submittal are listed and generally described in preceding paragraphs in this Section. Approved sheet sizes:
   a. Full size = 22x34 Half size = 11x17

Activity and Address	Drawing Size (Full Size)	Design Analyses & Specs	Drawing Size (Half Size)	CD-ROM (PDF& .dwg)	Furniture Submittal (Furnishings & Equipment)	Interior Design Submittal
NREL Design Department	1	5	12	12	12	3
NREL Construction Department	1	3	3	3	3	1
NREL NREL's Representative	1	5	5	1	2	1
Department of Energy	1	3	3	3	1	1

B. Web based Design Submittals

Web based design submittals will be acceptable provided a single hard-copy and CD-ROM PDF based record set is provided to the Subcontract Administrator for record purposes. Web based design submittal information shall be provided with adequate security and availability to allow unlimited access to NREL reviewers while preventing unauthorized access or modification.

8.3 SUBMITTALS

8.3.1 Submittal Procedures

A. GENERAL – DEFINITIONS: Subcontract Clauses apply to all "submittals." Submittals requirements are specified throughout the subcontract. Submittals are defined as follows.

1. Preconstruction Submittals: Documentation to record compliance with technical and administrative requirements to proceed with construction.
2. Shop Drawings: Drawings, diagrams and schedules specifically prepared to illustrate some portion of the work. Diagrams and instructions from a manufacturer or fabricator for use in producing the product and as aids to the Subcontractor for integrating the product or system into the project. Drawings prepared by or for the Subcontractor to show how multiple systems and interdisciplinary work will be coordinated.
3. Product Data: Catalog cut sheets, illustrations, schedules, diagrams, performance charts, instructions and brochures illustrating size, physical appearance and other characteristics of materials or equipment for some portion of the work. Samples of warranty language when the subcontract requires extended product warranties.
4. Samples: Physical examples of materials, equipment or workmanship that illustrate functional and aesthetic characteristics of a material or product and establish standards by which the work can be judged.
5. Color samples from the manufacturer's standard line, or custom color samples if specified, to be used in selecting or approving colors for the project. Field samples and mock-ups constructed on the project site establish standards by which the ensuring work can be judged. Includes assemblies or portions of assemblies that are to be incorporated into the project and those which will be removed at conclusion of the work.
6. Design Data; Calculations, mix designs, analyses or other data pertaining to a part of work. Design submittals and extensions of design submittals.
7. Test Reports: Report signed by authorized official of testing laboratory that a material, product or system identical to the material, product or system to be provided has been tested in accord with specified requirements. Testing must have been within three years of date of subcontract award for the project. Report which includes findings of a test required to be performed by the Subcontractor on an actual portion of the work or prototype prepared for the project before shipment to job site. Report which includes finding of a test made at the job site or on sample taken from the job site, on portion of work during or after installation.
8. Final acceptance test and operational test procedure.
9. Certificates: Statements printed on the manufacturer's letterhead and signed by responsible officials of manufacturer of product, system or material attesting that product, system or material meets specification requirements. Must be dated after award of project subcontract and clearly name the project.
10. Document required of Subcontractor, or of a supplier, installer or subcontractor to the Subcontractor, the purpose of which is to further quality of orderly progression of a portion of the work by documenting procedures, acceptability of methods or personnel.
11. Manufacturer's Instructions: Preprinted material describing installation of a product, system or material, including special notices and Material Safety Data sheets concerning impedances, hazards and safety precautions.
12. Manufacturer's Field Reports. Documentation of the testing and verification actions taken by manufacturer's representative to confirm compliance with manufacturer's standards or instructions. Factory test reports.

13. Operation and Maintenance Data: Data that is furnished by the manufacturer, or the system provider, to the equipment operating and maintenance personnel. This data is needed by operating and maintenance personnel for the safe and efficient operation, maintenance and repair of the item.
14. Closeout Submittals: Documentation to record compliance with technical or administrative requirements or to establish an administrative mechanism.
15. Approving Authority: Office authorized to approve submittal.
16. Work: As used in this section, on- and off-site construction required by subcontract documents, including labor necessary to produce submittals, construction, materials, products, equipment, and systems incorporated or to be incorporated in such construction.

8.3.2 Submittal Classification

A. Submittals are classified as follows:

1. Designer of Record Approved (DA)
   a. Designer of Record approval is required for extensions of design, critical materials, any deviations from the solicitation, the accepted proposal, or the completed design, equipment whose compatibility with the entire system must be checked, and other items as designated by the Subcontract Administrator. Within the terms of the Subcontract Clause entitled "Specifications and Drawings for Construction", they are considered to be "shop drawings".
   b. The Subcontractor will provide NREL the number of copies designated herein, of all Designer of Record approved submittals, after the designer of Record has taken appropriate action. The Designer of Record will ensure that submittals conform to the Solicitation, the Accepted Proposal and the completed design, however see below for those submittals proposing a deviation to the subcontract or a substitution of a material, system, or piece of equipment that was identified by manufacturer, brand name or model description in the accepted subcontract proposal.
   c. The Designer of Record shall ensure that the submittals comply with all applicable Buy American Act and Trade Agreement Act clauses in the subcontract. The Designer of Record may confer with the NREL Subcontract Administrator for advice and interpretation of those clauses, as necessary.
   d. NREL may, but is not required to, review any or all Designer of Record approved submittals for conformance to the Solicitation, Accepted Proposal and the completed design. Except for submittals designated as deviating from the Solicitation, the Accepted Proposal or completed design, the Subcontractor may proceed with acquisition and installation upon approval by the Designer of Record.
   e. NREL will review all submittals designated as deviating from the Solicitation, Accepted Proposal or completed design, as described below, before the Subcontractor is authorized to proceed with material acquisition or installation. The Subcontractor and the Designer of Record may discuss a submittal proposing a deviation with the NREL Subcontract Administrator prior to officially submitting it to NREL, if necessary to facilitate the project schedule. However, NREL reserves the right to review the submittal before providing an opinion, if NREL deems it necessary to evaluate it. In either case, NREL will not formally agree to or provide a preliminary opinion on any deviation without the Designer of Record's approval or recommended approval.
   f. NREL concurrence, as well as Designer of Record approval, is required before the Subcontractor may proceed with any proposed deviation to the completed design that still complies with the Solicitation and Accepted Proposal. NREL reserves the right to not-concur with any deviation to the design, which may impact furniture, furnishings, equipment selections or operations decisions that were made, based on the reviewed and concurred design.
   g. Unless prohibited or provided for otherwise elsewhere in the subcontract, where the accepted subcontract proposal named products, systems, materials or equipment by manufacturer, brand name and/or by model number or other specific identification, and the Subcontractor desires to substitute manufacturer or model after award, the Subcontractor shall submit a requested

substitution for NREL concurrence.

h. The submittal shall include substantiation, identifying information, and the Designer of Record's approval, as meeting the subcontract requirements and that it is equal in function, performance, quality and salient features to that in the accepted subcontract proposal.

2. NREL Approved: NREL approval is required for any deviations from the solicitation or accepted proposal, which may constitute a change to the subcontract terms, or any item specifically designated as requiring NREL approval in the solicitation, for internal and external color finish selections and other items as designated by the NREL Subcontract Administrator.
3. NREL Conformance Review of Design: NREL will review all final design submittals for conformance with the technical requirements of the solicitation. Review will be for conformance with the applicable codes, standards and subcontract requirements. Design data includes the design documents described in Section 6 Performance Specifications, Section 7 Substantiation and Total Building Commissioning.
4. Information Only: Submittals not requiring Designer of Record or NREL approval will be for information only. The Subcontractor shall provide NREL "For Information Only" copies of all submittals not requiring NREL approval or concurrence, after the Designer of Record has taken the appropriate action.
5. Approved Submittals: The NREL Subcontract Administrator's approval of submittals will not be construed as a complete check, but will indicate only that design, general method of construction, materials, detailing and other information appear to meet the Statement of Work and Accepted Proposal. Approval will not relieve the Subcontractor of the responsibility for any error which may exist, as requirements of this subcontract. The Subcontractor is responsible for design, dimensions, all design extensions, such as the design of adequate connections and details, etc., and the satisfactory construction of all work. After submittals have been approved by the NREL Subcontract Administrator, no re-submittal for the purpose of substituting materials or equipment will be considered unless accompanied by an explanation of why a substitution is necessary.
6. Disapproved Submittals: The Subcontractor will make all corrections required by the NREL Subcontract Administrator, obtain the Designer of Record's approval when applicable, and promptly furnish a corrected submittal in the form and number of copies specified for the initial submittal. Any "for information only" submittal found to contain errors or unapproved deviations from the Solicitation or Accepted Proposal shall be resubmitted as one requiring "approval" action, requiring both Designer of Record and NREL approval. If the Subcontractor considers any correction indicated on the submittals to constitute a change to the Subcontract, a notice in accordance with the Subcontract "Changes" Clause will be given promptly to the NREL Subcontract Administrator.
7. Withholding of Payment: No payment for materials incorporated in the work will be made if all required Designer of Record or required NREL approvals have not been obtained. No payment will be made for any materials incorporated into the work for any conformance review submittals or information only submittals found to contain errors or deviations from the Solicitation or Accepted Proposal.
8. General: The Subcontractor will make submittals as required by the specifications. The NREL Subcontract Administrator may request submittals in addition to those specified when deemed necessary to adequately describe the work covered in the respective sections. Units of weights and measures used on all submittals shall be the same as those used in the drawings. Each submittal will be complete and in sufficient detail to allow ready determination of compliance with subcontract requirements. Prior to submittal, all items shall be checked, approved, stamped, signed, and dated by the Subcontractors Quality Control Manager and the Designer of Record, if applicable, indicating action taken. Proposed deviations from the subcontract requirements will be clearly identified.
9. Submittal Log: The Subcontractor will develop a complete list of submittals, including each separate design package submittal. The Subcontractor will submit the initial submittal log within 30 days after subcontract award, including, as a minimum, the design packages and other initial submittals required elsewhere in the subcontract. The Designer of Record will identify required submittals in the

specifications, and use the list to prepare the Submittal Log.

10. If NREL provides a preliminary submittal log or list of submittals, the log or list may not be all-inclusive and additional submittals may be required by other parts of the subcontract. The Subcontractor will update and complete the submittal log as the design is completed. The Subcontractor will submit the log to the NREL Subcontract Administrator with the un-reviewed final design package submission or as soon as the design specifications are completed, if before the final design submission.
11. When using multiple design package submissions, the submittal log will be updated to reflect the submittals associated with each design submission, clearly denoting all revisions to the previous submission. The submittal log will serve as a tracking document for submittals and will be used to indicate submittal action status throughout the subcontract period. The submit dates and need dates used in the submittal log shall be coordinated with dates in the Subcontractor prepared progress schedule. Updates to the submittal log showing the Subcontractor action codes and actual dates with NREL action codes and actual dates shall be submitted monthly or until all submittals have been satisfactorily completed. When the progress schedule is revised, the submittal log will also be revised and submitted.
12. Scheduling: Submittals covering component items forming a system or items that are interrelated will be scheduled to be coordinated and submitted concurrently. Certifications to be submitted with the pertinent drawings shall be so scheduled. A minimum of fifteen (14) calendar days exclusive of mailing time will be allowed and shown on the register for those items requiring NREL approval or concurrence.

8.3.3 Submittal Procedures

A. Submittals will be made as follows:

1. Procedures: NREL will further discuss detailed submittal procedures with the Subcontractor at the Kick-Off Meeting.
2. Deviations: The Subcontractor will set forth in writing the reason for any deviations and annotate such deviations on the submittal. NREL reserves the right to rescind inadvertent approval of submittals containing unnoted deviations.
3. Control of Submittals: The Subcontractor will carefully control his procurement operations to ensure that each individual submittal is made on or before the Subcontractor scheduled submittal date shown on the submittal log.
4. NREL Approved Submittals: Upon completion of review of submittals requiring NREL approval or concurrence, the submittals will be identified as having received approval by being so stamped and dated copies of the submittal will be retained by the NREL Subcontract Administrator and one (1) copy of the submittal will be returned to the Subcontractor.
5. Information Only Submittals: Normally submittals For Information Only will not be returned. Approval of the Subcontract Administrator is not required on For Information Only submittals. NREL reserves the right to require the Subcontractor to resubmit any item found not to comply with the subcontract. This does not relieve the Subcontractor from the obligation to furnish material conforming to the plans and specifications; will not prevent the NREL Subcontract Administrator from requiring removal and replacement of nonconforming material incorporated in the work; and does not relieve the Subcontractor of the requirement to furnish samples for testing by NREL laboratory or for check testing by NREL.

6. STAMPS: Stamps used by the Subcontractor on the submittal data to certify that the submittal meets Subcontract requirements will be similar to the following:

SUBCONTRACTOR

(FIRM NAME)

_____ Approved

_____ Approved with corrections as noted on submittal data and/or attached sheet(s)

Signature: _____

Title: _____

Date: _____

8.4 ENVIRONMENTAL REQUIREMENTS

8.4.1 Environmental Protection Policy: NREL is committed to sound environmental protection that serves as an example to others and supports the Laboratory's mission to protect natural resources through research, development, and deployment of renewable energy and energy efficiency technologies. This commitment includes pollution prevention, continuous improvement, protecting natural resources, water conservation, energy conservation, materials reuse and recycling, education and communication, and adherence to requirements. The following general rules apply to environmental permitting and notification.

A. Air Emissions: Site-wide fugitive dust air emissions permits are currently in place for the STM site. Subcontractor activities shall be in accordance with the site-wide particulate emissions control plan and CDPHE Permit #08JE0889L. Compliance with the NREL procedure for Particulate Emissions Control for Construction, procedure 6-2.14, is required. The Colorado Department of Public Health and Environment (CDPHE) requires an evaluation of air emissions from stationary sources. Prior to installation of all fuel-burning equipment (diesel gensets, hydrogen gensets, hydrogen turbines), the Subcontractor must provide to the NREL Environment, Health and Safety Office (EHS) the make, model, maximum input rating (in Btu/hr), pollution control devices, and manufacturers emission data. NREL will submit the required Air Pollution Emission Notice to CDPHE. The State approval process will take a minimum of 160 days.

B. Asbestos: The use of Asbestos Containing Material (ACM) is not anticipated and is not authorized. However it is possible that unidentified ACM may be discovered during excavation activities. Should ACM be discovered, the Subcontractor shall stop the affected work and notify the NREL Project Manager.

C. Bird Surveys: Several laws protect raptors and other migratory birds from disturbance or harm. Prior to land disturbance, including mowing, the NREL EHS Office will conduct, at no cost to the sutractor, a nest search of the area to be disturbed. Mitigation actions, if required, are not in the scope of this subcontract.

D. Drinking Water: Drinking water shall be supplied to the facility by the Consolidated Mutual Water Company.

E. Hazardous Waste: NREL holds the necessary Resource Conservation and Recovery Act (RCRA) generator identification numbers to conduct waste generation and collection activities. NREL prohibits treating (evaporation, neutralization, dilution, or reduction of volume or toxicity) or disposing of hazardous waste on site. Subcontractor must contact the NREL EHS Office prior to any construction activity that will generate hazardous or chemical waste.

F. National Environmental Policy Act: Federal agencies are required to evaluate the potential impacts of federal actions and alternatives to the proposed actions as part of planning for an activity. Because NREL is funded by the DOE and operates on a DOE site, NREL's activities are subject to this requirement. NREL and DOE are in the process of obtaining approval of an addendum to the existing Site Wide Environmental Assessment for the South Table Mountain Site. Approval of the SWEA is expected prior to award of phase II of this subcontract.

G. Ozone-Depleting Substances: All refrigeration and air conditioning equipment that contains and uses an ozone-depleting compound refrigerant shall be registered with the CDPHE. Contact the NREL EHS Office prior to procuring such equipment.

H. Pesticide and Herbicide Use: All pesticide and herbicide use must be approved by the NREL EHS Office prior to application.

I. Preservation of Historical Resources: There is a high likelihood of uncovering historically significant materials during excavation on the project site. In the event that artifacts are uncovered the subcontractor will stop excavation and notify the NREL Project Manager. Prior to resuming excavation or further disturbing the affected area, NREL will determine if the items are historically significant. Typically a determination will be made within 3 days of the initial notification. NREL will perform the iste investigation at no cost to the subcontractor. Mitigation actions, if required, are not in the scope of this subcontract.

J. Sanitary Waste: Provide waste storage and removal as required to maintain site in clean and orderly

condition with periodic disposal of waste off-site. Open free-fall chutes and containers without lids are prohibited.

K. Storage Tanks. Above ground storage tanks may require State registration. Contact the NREL EHS Office prior to procuring such equipment.

L. Storm Water Discharge: NREL has storm water pollution prevention plans for each site which describe the requirements for storm water runoff and erosion control and for restoration upon project completion. Activities that may create land disturbances are performed in accordance with the storm water pollution prevention plan for the site on which work will occur. Site-specific erosion and sediment control plans are prepared for construction projects prior to the beginning of the project. The EHS Office must review and approve these plans in advance of construction activities. Compliance with NREL procedure "Storm Water Prevention for Construction Activities: South Table Mountain", Procedure 6-2.15, will be required for construction activities. For construction meeting certain criteria set forth by the Environmental Protection Agency, a Notice of Intent for coverage under the Construction General Permit is required and may take up to a month to process. NREL will obtain the required storm water permit. The Subcontractor shall provide the NREL EHS Office with the information required to prepare the permit.

M. Wastewater: NREL limits wastewater discharges to sewer or septic systems. NREL does not permit other direct discharges to the environment, including land and surface water. NREL complies with Pleasant View Water and Sanitation District (Pleasant View) and Metro Wastewater Reclamation District (Metro) prohibitions, criteria, restrictions, and notification requirements for wastewater discharges. Discharges of large volumes of wastewater (25,000 gallons per day or greater) require a special permit from the wastewater districts. Contact the EHS Office if such a volume is planned on a routine, periodic, or occasional basis. Direct discharge to the environment, as opposed to the sanitary sewer, requires a permit from the CDPHE. NREL prohibits such discharges.

N. Wetlands and Drainage Areas: There are no wetlands in the proposed building location.

8.5 QUALITY ASSURANCE AND QUALITY CONTROL

A. Design Criteria: During Preliminary Design, the design and performance criteria must be refined, finalized, and documented for approval by NREL. These refinements will not be considered changes to the "RFP Documents" requirements; rather they are a routine part of performance-based design-build delivery.

1. NREL will appoint representatives of the following work groups to provide details of functional needs:
   a. User groups.
   b. Operations staff.
   c. Maintenance staff.
   d. NREL's commissioning agent.
   e. NREL's Representative
2. Design Documentation: Record all design and performance criteria that will be of use during occupancy and operation of the project, including all items specified for maintenance manuals below.
   a. Design Criteria Documentation Included in Construction Documents: Organized logically (from the point of view of Operations staff) and placed in a prominent location in drawing sets.
   b. If desired, documentation may consist of annotated modifications to, and amplification of, the Statement of Work, with changes that affect subcontract times or subcontract firm fixed price documented as required for modifications.
   c. If required, shop drawings may be used to accomplish design documentation.
   d. NREL will maintain the project program document, modified to reflect changes made during refinement of the design.
   e. Drawings: Prepared using AutoCAD 2008, using NREL's specified drawing and layering conventions and following the NREL CAD manual.
   f. Shop Drawings: Prepared using same CAD software.
   g. Mock-Ups: Where necessary to clarify design intent, construct Mock-Ups that may be incorporated into the work.

B. Substantiation Requirements: See Section 6.3 – Section 111 – Facility Performance definitions and basic requirements; see other Sections for specific items of substantiation required

C. Substantiation Submittal Procedures:

1. Time Frames: If there is a conflict between the degree of detail or completion specified and the progress of the design or construction, obtain a clarification before submitting.
2. Recipient: Senior Supervisor, Contracts and Business Services, Karen Leitner, at 1617 Cole Blvd, Golden Colorado, 80401.
3. Number of Copies: 3 (three) hardcopies for NREL's use and records and 1 (one) electronic form; NREL will return not more than 1 (one) copy.
4. For time periods that constitute Milestones, all substantiation submittals required during that period must be complete and accepted before the Milestone can be considered achieved.
5. Substantiation Submittals are the primary means for NREL to measure and understand the design and construction intent of the Subcontractor. All substantiation submittals must be submitted in both hardcopy and electronic forms. Absence of properly submitted substantiation (as identified and required by the RFP Documents) by the Subcontractor will be a basis for NREL to measure non-compliance of the Subcontract requirements of the Subcontractor.
6. Submit complete sets of documents containing all substantiation at end of the following periods:
   a. Proposal period.
   b. Preliminary Design period.
   c. Design Development period.
   d. Construction Documents period.

e. Closeout period.

7. Resubmissions: Clearly identified as such, with all changes made since the original submittal clearly marked.

D. NREL's Review of Substantiation: Unless otherwise indicated, NREL will make formal acceptance of substantiation submittals.

1. If a submittal is not acceptable NREL will notify Subcontractor promptly.
2. Allow minimum of 14 working days for review of major "end of period" submittals.

E. Substantiation Schedule: Prepare and maintain a complete schedule of substantiation items, showing:

1. Contents, for each item:
   a. Anticipated and actual item, with Section and paragraph number and drawing identification, if any.
   b. Anticipated submittal date, or time period(s) during which submittal is required.
   c. Actual submittal date.
   d. Action taken or other status.
   e. Identification of future re-submission requirement, if any.
2. If desired, schedule may be incorporated into overall progress schedule, provided substantiation data can be reported separately from other progress information.
3. Submission: To NREL, within 30 days after Notice of Award of Phase II.
4. Form: Computer database format for NREL's use in tracking submittals; database structured so NREL's added information will not be overwritten or deleted by incorporation of updated data from Subcontractor.
5. Updates: To NREL, monthly in hard copy. Updates are required irrespective of any changes to the schedule.

F. Field Testing and Inspection: Provide a schedule that identifies all testing, observation, and inspection required by code. The Subcontractor will conduct all testing and commissioning activities NREL's independent commissioning agent will be present to oversee the results of the commissioning activities.

1. The Subcontractor will provide a full Commissioning Plan during Preliminary Design, See Section 8.7 Total Building Commissioning.

G. Reference Standards: Where products or workmanship is specified by reference to a document not included in the Subcontract Documents, comply with the requirements of the document, except where more stringent requirements are specified.

1. Date of Issue: As indicated in each instance except where a specific date is established by code.
2. Copies on Site: Keep copies of referenced standards that prescribe installation or workmanship standards on site until completion.

H. Quality Assurance Plan: Please see Section 9.6 for a Sample NREL Quality Assurance Plan.

The Subcontractor shall prepare a formal Quality Assurance Plan that shall be submitted to NREL for approval prior to the start of design. The Subcontractor shall utilize the plan and defined processes and procedures to meet the project objectives and guard NREL against errors and omissions in design, as well as defects in material, equipment, and workmanship during construction. At a minimum, the Quality Assurance Plan shall address the following:

1. Criteria used for applying a graded approach to quality assurance and quality control activities during design and construction;
2. Process for evaluating whether all architectural and engineering designs are consistent and interconnected between the various disciplines and lower-tier subcontractors;
3. A list of the quality control checkpoints and criteria;

4. Design review, approval, and submittal processes and authorities;
5. Design development and evaluation checklists;
6. Processes for reviewing, inspecting, testing, and accepting construction;
7. Process for validating operating requirements for equipment used during construction activities;
8. Process for validating workmanship. Include sampling plans as appropriate;
9. Minimum professional qualifications for each level of design and construction in all applicable disciplines;
10. Process for verifying professional qualifications and maintaining the records;
11. Processes for analyzing and verifying updates to documents. This includes planning documents, requirements documents, and design documents;
12. Process for managing records and data;
13. Process and criteria for evaluating and selecting vendors and lower-tier subcontractors;
14. Process for evaluating whether design, construction, and NREL requirements are flowed down to suppliers and subcontractors;
15. Process for validating delivered equipment and supplies including inspection and testing. Include sampling plans as appropriate. Also include any special activities associated with identifying suspect and counterfeit items.
16. Formal assessments performed during design and construction to verify compliance with requirements and processes.
17. Process for managing issues and corrective actions identified during assessments, reviews, and inspections.

At each formal review of the design, the Subcontractor shall submit a record of the quality control checkpoints met and the disposition of all outstanding exceptions or variances. Unless otherwise directed, the Subcontractor shall ensure that all construction inspections that would be required under the local permitting authorities are performed. The Subcontractor shall ensure that all work submitted for use in construction of the project is stamped or otherwise approved by an Architect or Engineer registered in the state of Colorado.

8.6 TOTAL BUILDING COMMISSIONING

A. Performance Statement

1. Subcontractor is to plan and perform Total Building Commissioning (TBCx) to demonstrate to NREL that the design, installation, and functional characteristics of the commissioned equipment, systems, and interrelationships between systems achieve the goals set by the Subcontractor's designers. The commissioning effort is to create a valid record of inspection, test preparation, final test demonstrations and training that ensures that NREL's Project Requirements are met by the facility's physical and operational standards.
2. The extent of the commissioning is to include: laboratory and research equipment, HVAC systems, including electronic digital control systems; building automation systems; laboratory gas, compressed air, and vacuum systems; data rooms and equipment, and major energy plant equipment; backup power systems, and their interfaces to other critical building system operations; fire detection and alarm systems, and their interfaces to other critical building system components; electronic communications systems including voice and data transmission, and others; building systems which are incrementally constructed and commissioned, such as in phased construction projects; and critical envelope elements.
3. Planning, inspecting, and test preparation are required for successful demonstrations (witness testing) of system performance. The Subcontractor is to perform the TBCx process using quality-based sampling for verification of each task and test determined to be related to the OPR. TBCx is specific to the systems indicated, but also reviews the impacts of these systems on the "Total Building" and vice-versa. It evaluates the building as one functioning assembly instead of just its discrete parts. In this document, "Total Building Commissioning", "TBCx", and "commissioning" (Cx) are used interchangeably to mean the same thing.
4. The Subcontractor will be responsible for developing the documentation of an OPR-as presented by NREL in the RFP- and Total Building Commissioning Plan (Cx Plan) that meets Statement of Work; Section 6, Performance Specifications; Section 7 Substantiation, ASHRAE Guideline 0; ASHRAE Guideline 1; and the Request for Proposal document.

B. Reference Publications

The TBCx shall be provided in accordance with the referenced ASHRAE/NIBS commissioning documents. Forms used shall conform to the recommendations in the referenced commissioning guidelines.

C. Commissioning Definitions

1. Commissioning definitions shall be as defined in ASHRAE Guideline 0 and ASHRAE Guideline 1. The following are additional definitions specific to this project:
2. NRELs Project Requirements (OPR): Document that provides clarity to specifics from the RFP
3. Basis of Design (BoD): Document provide by the DOR and design team
4. Building Automation System (BAS): Building control system, see Section D36 HVAC Controls.
5. Commissioning Plan (Cx Plan): A composite document which identifies and describes activities, including, but not limited to commissioning forms, commissioning schedule, and commissioning plan and milestones for implementation of the TBCx process.
6. Design-Build Commissioning Agent (CxA): Person responsible for commissioning of the building, TBCx for the design-build tea.
7. NREL's Commissioning Agent (OCxA): NREL's Representative responsible for commissioning oversight.
8. Commissioning Schedule: A document that identifies the order and predecessors of the specific TBCx activities and should be adjustable to meet the changes in installation practices as the project moves

forward. The commissioning schedule shall be updated 30 days prior to the start of any TBCx Activities and as needed throughout the process.

9. Functional Performance Test (FPT): An integrated functional performance test of a system or of multiple components and subsystems that is conducted building-wide.
10. Testing, Adjusting, and Balance (TAB): see Section 6 Performance Specifications.

D. Scope of Work

1. Demonstrate that the Total Building as a whole, with respect to commissioned equipment, subsystems, and systems; and to interrelationships between commissioned systems, is designed, installed and operating to specified conditions, status, and performance.
2. The Design Build Commissioning Agent (CxA) shall conduct all TBCx activities throughout the design and constructions phases. Provide review and comment on the Basis of Design documents from the design-build team, and develop a log to track issues or concerns as they arise and get to resolution. During design the CxA shall actively participate in design activity to ensure that systems are designed to physically enable TBCx to be executed effectively, and that the performance of systems is being designed to meet the OPR and Program. During the construction phase, commissioning field activities will be recognized through proper documentation and reporting to the OCxA having oversight of the project.
3. Section 6 Performance Specifications and Section 7 Substantiation list the minimum Commissioning Requirements. As the design is completed the Design Build Commissioning Representative is responsible for developing further commissioning requirements including specifications and requirements of LEED, and ASHRAE Guidelines 1 and 0. This information is required to be submitted to NREL in the form of an updated Substantiation Spreadsheet. Refer to Section 8.3.3 Submittal Procedures.
4. Before start-up, gather and review the current control sequences and interlocks and work with Subcontractors and design engineers until sufficient clarity has been obtained, in writing, to be able to write detailed testing procedures.
5. Review and comment on (but not approve) normal Subcontractor submissions applicable to systems being commissioned for compliance with commissioning needs, concurrent with the A/E reviews.
6. Provide review and filed observation of architectural envelope as it relates to the performance of the HVAC system-to include thermal imaging for documentation
7. Write and distribute installation checklists.
8. Assist Subcontractor in developing an enhanced start-up and initial systems checkout plan.
9. Perform site visits, as necessary, to observe component and system installations. Attend selected planning and job-site meetings to obtain information on construction progress. Review construction meeting minutes for revisions/substitutions relating to the commissioning process. Assist in resolving any discrepancies.
10. Witness the HVAC piping test and flushing procedures sufficiently to verify that proper procedures were followed. Include documentation of this testing in the O&M manuals. Notify the NREL ESIF Project Manager of any deficiencies in the results or procedures.
11. Witness ductwork testing and cleaning procedures, sufficient to be confident that proper procedures were followed. Document this testing and include documentation in the O&M manuals. Notify the DPW Project Manager of any deficiencies in the results or procedures.
12. The installation tests and checklist procedures are executed by the General Subcontractor and lower-tier subcontractors under the direction of, and documented by, the CxA.
13. Approve systems start-up by reviewing start-up plans and by site observation.

14. Provide review of installation and appropriate testing for electrical equipment and service to building discrete from the backup power testing
15. Provide review of design and installation of lighting systems including day lighting and controls for LEED substantiation and documentation
16. Provide complete Testing, Adjusting, and Balancing review and verification services for air and water HVAC systems.
17. Verify necessary building pressurization relationships between Labs and corridors and/ or other surrounding spaces.
18. With necessary assistance and review from installing Subcontractors, write the functional performance test procedures for equipment and systems.
19. Perform functional testing of the automatic control system after the control Subcontractor completes the installation and start-up and after the operational testing has been completed. Provide troubleshooting to assist in resolving control problems as they are uncovered. Functional testing shall be performed on all control points and operations.
20. After items of non-compliance are corrected, the system shall be retested by the CxA until satisfactory results are documented.
21. Maintain a master deficiency and resolution log and a separate testing record. Provide the NREL ESIF Project Manager with written progress reports and test results with suggested actions.
22. Conduct performance testing of smoke control systems, and witness all NREL contracted tests or tests by manufacturer's personnel over which the CxA may not have direct control. Document and include in the Commissioning Record and in the O&M manuals.
23. Review equipment warranties to ensure that NREL's responsibilities are clearly defined.
24. Review, pre-approve and coordinate the training of NREL's operating personnel by the Subcontractor. This shall include supervision of the production of the training video for the building O&M procedures.
25. Review (but not approve) the O&M documentation for completeness. This review shall be in parallel with the A/E's review of the O&M manuals for conformance to the project specifications.
26. Provide a final commissioning report. The report shall include an executive summary, list of participants and roles, brief building description, overview of commissioning and testing scope, and a general description of testing and verification methods. The report shall contain sections including:
    a. Installation check sheets
    b. Copies of installation testing procedures
    c. Start-up plan(s)
    d. Operational tests
    e. Testing, adjusting and balancing reports
    f. Functional performance tests
    g. Efficiency log and deficiencies
    h. Training forms
    i. Inspection and certification documents/certificates
27. Systems included, but not limited to, to be commissioned:
    a. Central building automation systems, including linkages to remote monitoring and control sites;
    b. All heating, ventilating and air conditioning systems, including associated equipment;
    c. Laboratory Hoods and space pressurization;
    d. Refrigeration Systems; including storage systems, rooms, tanks, vessels, etc.;
    e. Life safety systems (fire alarm, egress pressurization, fire protection);
    f. Domestic and process water distribution systems;
    g. Laboratory gas and water systems;
    h. Data Centers and their performance;
    i. EPO Systems as applied to this project;

j. UPS Systems;
k. Process Water Systems;
l. Domestic Water Systems-hot and cold;
m. Laboratory Gases;
n. Laboratory Water Systems;
o. Fume Hoods;
p. Fire Cabinets;
q. Backup Power Systems;
r. Variable Frequency Drives-minimum and maximum function
s. Uninterruptable Power Supply Systems
t. Electrical system from the building entrance through the main gear to the distribution panels;
u. Building Envelope;
v. Vapor Barrier;
w. Lighting Levels and Control System;
x. Communication and Paging Systems;
y. Building Security Systems;
z. Closed Circuit TV and cabling;
aa. Access Control;
bb. Thermal Bridging;
cc. Laboratory and research equipment;
dd. Insulation Systems;
ee. Acoustical Performance of equipment and space relationships throughout the building;
ff. Vertical Transportation;
gg. IT Infrastructure Verification;
hh. Cabling for Communication;
ii. Isolated Power Systems;
jj. Power Monitoring;
kk. Harmonic Mitigation compliance;

ll. Laboratory Equipment provided by the Subcontractor;
mm. Laboratory Equipment provided by NREL and installed by the Subcontractor,
nn. Irrigation System
oo. Lighting Protection System

E. Design-Build Commissioning Agent (CxA)

1. The CxA shall independently function and employ a strict communication protocol that directs all reporting to NREL and not through the Prime Team/Subcontractor. This protocol is intended to provide unbiased information to NREL and eliminate potential conflicts of interest as required by US Green Building Council policy for Energy and Atmosphere Credit 3, Enhanced Commissioning. This Credit and supporting interpretations require: 'that the commissioning authority must be separate from the project designers, must function independently and without conflicts of interest with respect to management, shared staff, financial relationships, etc.'
2. A precedent Credit Interpretation Ruling, dated 12/22/2005, states: The intent of the credit is met if the design builder has hired an independent third-party commissioning provider. To ensure that conflict of interest is minimized, there should be a clear, direct line of communication from the commissioning provider to NREL.
3. The CxA is responsible for the Cx process as the Design Builder's Commissioning Agent. These responsibilities include:
   a. Extract all initial commissioning requirements from Section 6 Performance Specification and Section 7 Substantiation.
   b. Providing Commissioning to meet the intent of the Performance Specifications and Substantiation

c. Further develop commissioning requirements as design is completed, to include responsibilities for labs and specialized services to incorporate Total Building Commissioning.
d. Schedule all Cx activities and perform review of completed work.
e. Organize and manage the Cx work of the Cx Team.
f. Prepare and issue the Commissioning Plan.
g. Maintain the current Cx Roster.
h. Maintain the Cx Schedule.
i. Manage submittals reviews per the requirements of Section 8.3 Submittal Procedures and requirements to meet LEED.
j. Notify the team of any plan changes, schedule changes, submittals, change and variation requests, or field conditions that affect commissioning.
k. Collect, organize, and issue the Training Syllabi per the requirements of Section 8.10 Closeout Submittals
l. Communicate with the OCxA, keeping the OCxA informed of activities that affect Cx.
m. Provide documentation and fill out templates as necessary for submission to USGBC for meeting LEED requirements for Fundamental, Enhanced and additional commissioned systems as required by this RFP.

F. Commissioning Plan

1. The Commissioning Plan (Cx Plan) provides the Cx Team structure and guidance for how the Cx process will be accomplished. As the design is started an initial Cx Plan shall be submitted for review and comment by the OCxA and will contain the Cx Plan components listed below. The Cx Plan shall be updated as the project progresses so that all team members have a clear understanding of the processes. A final Cx Plan with revisions will be submitted at substantial completion for review and comment, after which the final will be provided to NREL, including the required Re-Commissioning manual to be used during the warranty period:
2. Commissioning Plan Components:
   a. Commissioning Team members
   b. Commissioning Schedule
   c. Review and clarification of NRELs Project Requirements (OPR)
   d. Review and clarification of the Basis of Design Document (BoD)
   e. Commissioning field data management methodology
   f. Procedures to be used for addressing submittal data, change and variation requests, and contract modifications that affect Cx
   g. Commissioning and Coordination meetings with CxA & OCxA including name, purpose, agenda, and schedule for each meeting
   h. Commissioning Checklist forms
   i. Procedures for conducting examinations, calibration, adjustments & balancing, startup, and FPT preparation
   j. Functional Performance Test (FPT) forms
   k. Specifications as necessary to perform FPT's
   l. FPT procedures including instrumentation
   m. Testing coordination schedule indicating the sequence of FPTs and concurrent FPTs
   n. Training agendas, lesson plans and facilitation of both
   o. Descriptions for Submittal reviews and resolution-if necessary
   p. Issues Log to be maintained through the project from the inclusion of the Cx process through the warranty phase

G. Commissioning Schedule

1. The Cx Activities are required to be included in the Subcontractors overall design and construction schedule required in Article 17. The intent of the Cx Schedule is to maintain an orderly and logical

progression of the commission activities so that they are coordinated with design and construction to support design-build fast track.

2. The Cx Schedule shall include enough detail to establish the coordination of commissioning with other activities in the project process.
   a. Indicate ongoing activities in areas that are done first, as well as final activities for the end of the project.
   b. Showing milestones and predecessors including, but not limited to, the following:
      i. Dated submittals, including time for conformance review of submittals.
      ii. Design Reviews at design submittal stages
      iii. Cx meetings
      iv. Start-up completion
      v. BAS Point-to-Point checkout completion
      vi. TAB completion
      vii. Completion of CCs
      viii. Pre testing of FPTs (dry run)
      ix. Functional Performance Testing, by system
      x. Submittal of O&M manuals per Section 8.10 Closeout Submittals.
      xi. Shakedown operation period (shakedown)
      xii. Submittal of closeout documentation
      xiii. Re-Commissioning manual for Facility staff to use during post occupancy phase

H. Commissioning Checklists

1. The CxA shall develop the Commissioning Checklists (CCs), making them project-specific and incorporating the Subcontractors means and methods. Use the CCs to identify issues relevant to the installation of components, their assembly into systems, and their preparation for testing. Provide CCs that are complementary to the Cx Plan, Cx Schedule and the Subcontractors overall Project Schedule for design and construction.
2. The CCs shall be organized by installing trade or entity. Each trade shall complete its section by signature & date after each "question" on the form.
3. "Questions" shall include detailed verification of compliance with submittal; pre-installation checks; installation of item; installation of pipe, duct, controls, accessories, and utilities to item; startup of item including: energizing pipe, duct, controls, accessories, and utilities at the item; adjustment and balance of item's operational characteristics; preparation and pre-testing of item for FPT; completion of the BAS point-to point checkout; TAB report and verification completion; and a general statement by the CxA accepting the accuracy and completeness of the CC and the "readiness" of the item in question.
4. Utilize Quality Based Sampling for verification of Commissioning Checklists. Failure of the examination samples conducted by the CxA shall invoke a corrective procedure as follows:
5. Upon failure of 10% of the sample to meet examination requirements, a second sample of equal size or number will be examined.
6. Upon failure of 10% of the second sample, the entire body of the initial examinations shall be disqualified and must be repeated by the installing personnel and verified by their supervisory personnel, and signed off by all participants.
7. In the event of disqualification due to such failures, the sample size of the CxA repeat examination will be at 100%.

I. Functional Performance Testing Process

1. The CxA will organize, schedule and carry out all Functional Performance Testing in a logical, organized sequence to assure complete and effective testing, beginning with equipment or components and progressing through subsystems to complete systems, and complete with global (building-wide) systems.

2. The FPT procedures shall demonstrate the following:
   a. Through all load ranges; through normal, abnormal, and alarm conditions; through shutdown and restart (auto or manual); and through all control sequences.
   b. All life safety devices and systems as they interface with Building systems including but not limited to fan shut down, smoke dampers, alarms, emergency lighting, etc.
   c. Equipment safeties and controls including but not limited to fire detection, relief valves, and high-low limit devices, etc.
   d. Simulation of failures or seasonal change-over as appropriate to the system being demonstrated.
   e. Seasonal testing will be done during the warranty period
3. Each FPT step shall be organized in a logical sequence to demonstrate individual actions, settings, adjustments, and balance; and then leading to operation of features and functions on the item; and then leading to operation of the item as a complete assembly, and then leading to the item as a component in a larger system.
4. The FPT shall detail the procedures and expected results of the testing. The FPT procedures shall also benchmark the peak output on plant-level (chiller/boiler) and system-level (AHU (air handling unit)/pump/fan/coil/HX (heat exchanger)) components for the conditions achievable during the test.
5. Verify the completion of the following predecessors to FPTs including CCs, preparation, and documentation:
   a. All predecessor shop drawings have been provided. Retain for cross check on as-built submittal.
   b. Completed CCs indicating the equipment and systems are in a state of readiness for testing and acceptance.
   c. All punch list items have been corrected and signed off.
   d. All involved systems shall be 100% complete and functional.
   e. Manufacturer's certified performance data and installation, operation, and maintenance instructions.
   f. Approved final test and balance report.
   g. Equipment start-up and certification reports
   h. BAS Trend logs for commissioned equipment including but not limited to chillers, air-handlers, economizer cycles, heat generation system, and etc.
   i. Training plan and training manuals
   j. Operating and maintenance manuals for commissioning equipment are complete and available for reference.
6. Each FPT shall be completed by the Commissioning Team (CxT).
7. Prior to the FPT of each system, the CxT shall observe and verify and document that the physical installation of components and systems being tested is installed in accordance with the Subcontract documents.
8. Adequate notification shall be given to all FPT participants, including the OCxA
9. Acceptance of the completed FPT by each Commissioning Team member shall be indicated by signature and date on the FPT form. Each FPT shall be reviewed by the OCxA.
10. The OCxA shall be allowed to witness any and/or all FPT's.
11. The Subcontractor is required to correct all deficiencies if there is a failure in any FPT procedure. Repeat the FPT until satisfactory results are obtained.
12. Deferred Functional Performance Tests: Schedule and conduct FPTs during periods when the weather will comply with the weather conditions required for validation of FPTs. If any check or test cannot be accomplished for legitimate seasonal reasons, lack of occupancy, or for other reasons acceptable to NREL, the Subcontractor shall request in writing that the test be rescheduled. If any check or test cannot be accomplished due to building structure or other building system or environmental deficiencies, these deficiencies shall be brought to the attention of NREL in writing for resolution.

J. Commissioning of Laboratory and Research Equipment

1. The Subcontractor will be responsible for providing commissioning services for new laboratory and research equipment provided as part of the subcontract. CxA shall coordinate with the equipment manufacturer and supplier for delivery requirements, installation requirements, start-up procedures, start-up testing, system testing, functional performance testing, training, and operation procedures. Subcontractor provided laboratory and research equipment commissioning to comply with other requirements of this section.
2. The Subcontractor will coordinate with original equipment manufacturer or supplier for commissioning of existing NREL laboratory and research equipment to be relocated to the new facility by the Subcontractor. Commissioning of existing equipment to include relocation procedures, installation, starr-up, start-up testing verification, functional performance testing, operating procedures, and training. Existing laboratory and research equipment commissioning activities to comply with other requirements of this section and the RFP.
3. A list of laboratory and research equipment is provided in Section 5: Programming Requirements. Equipment provided by NREL and installed by NREL need only have connections for power and other services verified by Design Build Team. Any commissioning required for NREL provided and installed equipment to be provided for by NREL.

K. Training Lesson Plan

The training lesson plan shall indicate specifics of the various training sessions required for commissioned equipment. The lesson plan shall include enough information that the CxA and NREL can ascertain if the training sessions will be adequately staffed, supported, and if they will have adequate content. The training lesson plan requirements described herein do not modify requirements of any non-commissioned system.

1. Name and qualifications of the trainer
2. Course outline with example of the training materials to be used
3. Recommended attendees
4. Approximate apportionment of classroom time and "hands on" time working on the equipment.
5. Estimated time required for completion of course
6. Example of the training completion statement.

The training completion statement is a document that states that the required training session was conducted. It identifies the trainer and his/her contact information, the title of the training, the specification section that the training satisfies, an accounting of the time devoted to classroom and field exercises, a description of the training materials used, and includes signature of trainees attesting that the training was conducted satisfactorily.

L. Commissioning Plan/Final Report

1. The Subcontractor will be required to provide final Commissioning Plan/Final Report 30 days after the TBCx is complete –Excluding the Warranty Period re-commissioning - to document the commissioning process, containing the following requirements.
   a. The Subcontractor's Commissioning Representative's resume. This was submitted to NREL in the RFP and it is needed again for commissioning documentation purposes.
   b. A roster of commissioning team members who will represent the Subcontractor in TBCx.
   c. A detailed, project-specific Commissioned Equipment List.
   d. Completed Start up reports for all equipment commissioned.
   e. Completed Commissioning Checklists (CC) for each commissioned item or system.

f. Completed Functional Performance Test (FPT) procedure forms for each commissioned item or system.

g. The "final" revised Commissioning Plan, including the revised Commissioning Schedule used to complete the Cx process.

h. A list of system components or subsystems requiring interim, seasonal, or follow-up Commissioning shall be separately identified.

i. Training completion statements for all commissioned equipment/systems.

j. Written narrative reports analyzing the proceedings of TBCx including separate reports on each "Global" FPT, a summary report including each type equipment and system FPT, and an Executive Summary report on the overall effects of the Cx Process.

k. Copy of Electronic Service Manual for LEED compliance.

l. Copy of Completed Cx Template submitted to the USGBC for LEED compliance.

m. Re-Commissioning manual for Warranty period testing.

8.7 SAFETY

Please see Section 9.7 for further information and NREL's Safety Plan Requirements for Construction

8.7.1 NREL Construction Safety Expectations

A. The NREL safety culture begins with Zero incidents as an expectation and promotes continuous improvement in safety performance. Zero incidents mean error-free, incident-free project execution: no injuries, illnesses, property damage, or adverse community or environmental impacts. Performance at this level does not happen by chance—it is achieved through the integration of safety into all management systems, the project process, and by individual effort. NREL believes that all incidents are preventable.

B. Health and safety programs, plans, and procedures define the applicable safety requirements and clearly specify the performance and behavior expected from each NREL Subcontractor employee. Training is provided and/or required to ensure an understanding of the requirements. Communications, awareness, and recognition reinforce the training effort and provide motivation for the achievement of safety excellence. Monitoring and evaluation of Subcontractor safety performance provides feedback on the effectiveness of the overall safety program and results in continuous safety program improvement through implementation of lessons learned. This programmatic approach to safety establishes a work environment in which safety is a prerequisite and employee work practices reflect the DOE/NREL safety culture.

C. NREL Subcontractors (including lower-tier subcontractors) shall implement and maintain a safety program on-site consistent with 10 CFR 851 DOE Worker Safety and Health program and compliant with NREL procedure 6-4.12 "Construction Environment Safety and Health" (see Section 8.7). It is recognized that safety programs which go beyond mere compliance with industry standards achieve better safety performance and fewer worker injuries or illnesses, and save money. The health and safety management system is required by Subcontract and is intended to fulfill DOE standards. Specifically, NREL Subcontractor safety programs shall, at a minimum, include the elements described below:

1. Management Commitment – On-site management, supervisors, and foremen show proactive, visible leadership for the safety program. This includes active involvement in safety meetings and safety inspections, including safety concern in the planning, budgeting, and scheduling process, and recognizing or rewarding employees for participation in safety programs and practicing safe work behaviors.
2. Employee Involvement – Employees should be involved with all levels of the safety process. This includes, as a minimum, involvement in:
   a. Safety meetings (daily or periodic, and the monthly subcontractor safety meeting)
   b. Safety inspections (periodic, weekly, and/or monthly)
   c. Exercising the worker's right to stop work
   d. Raising and reporting safety concerns
   e. Reporting incidents including near misses
3. Additional avenues for employee involvement are encouraged, such as employee development or review of the task-specific HASP and Activity Hazard Analyses (AHAs), participation in incident reporting and investigation, development and presentation of safety training, and participation in project or department safety committees.
4. The Subcontractor will be required to include and present NREL's Environmental Protection Policy and requirements during initial worker site briefing/safety orientation. Availability for participation in occasional environmental audits/assessments is expected of the subcontractor.
5. Worksite Analysis – A worksite analysis program shall be developed and maintained including safety inspections, participation in periodic health and safety reviews, and assessments, worksite monitoring (physical, chemical, and biological hazards), tracking, and trending of incidents and corrective actions, and provision of adequate, qualified health and safety resources for the work.

6. Hazard Prevention and Control – A worksite free of recognized hazards must be maintained. Work shall be planned to prevent or eliminate hazards where feasible. Adequate resources must be provided to control hazards using the following hierarchy; engineering controls, work practice or administrative controls and, lastly, Personal Protective Equipment (PPE). Adequate resources must be available to abate potential hazards in a timely manner.
7. Safety and Health Training – A complete safety and health training program shall be implemented and maintained to meet regulatory requirements and ensure that employees are adequately trained to perform work safely. Employees shall be trained to applicable plans and procedures and be aware of the health and safety hazards of the work, signs, and symptoms of overexposure, and ways to protect themselves from workplace hazards. Additionally, employees shall be apprised of their rights and responsibilities under the 10 CFR 851 DOE 851 Worker Safety and Health Program.
8. Health and Safety Plan – A written Health and Safety plan per the requirements or NREL procedure 6-4.12 "Construction Environment Safety and Health".

D. NREL places significant emphasis on:

1. Full compliance with 10 CFR 851 to include medical surveillance
2. Competent safety staff on the job site at all times during operations
3. Effective safety orientations for all personnel entering the site
4. Effective documented safety training e.g. fall protection, hearing conservation, ladder
5. Documented safety meetings daily POD, weekly tool box
6. AHA development for all definable features of work e.g. mobilization, clearing and grubbing, foundation, steel erection
7. Pre-phase planning of all definable features of work
8. Competent person identification for work involving cranes, excavation, electrical
9. Supervision to craft ratio
10. Time in the field. Do not under estimate the administrative requirements for supervision, safety, and quality personnel who are needed in the field. Additional administrative support for those personnel is strongly encouraged.

8.7.2 Process Hazards Analysis

Early identification of potential process hazards and mitigation strategies is the key element of a safe and compliant ESIF design. A systematic risk assessment process is required incorporating a graded approach to determine: 1) the environmental, safety and health hazards presented by facility operations, 2) the level of risk presented by these hazards, and 3) the controls necessary to maintain the risk at an acceptable level. NREL expects a rigorous and detailed process hazard analyses of the process and research systems that will demonstrate their safe function during the lifecycle of the ESIF and comport with the principles of inherently safe design, defense-in-depth, and fail-safe design. The Design-Builder is expected to deliver a design, in collaboration with NREL, that has an optimal combination of engineered, operational, and administrative controls with heavy preference on engineered controls that are based on throrough and complete process hazards analyses.

8.8 TEMPORARY FACILITIES CONTROLS

A. The Subcontractor must plan on mobilizing to the job site on the space provided in the site use plan (See Section 9.1). The space indicated on the site use plan is the space allotted to the Subcontractor for establishing temporary facilities, parking, lay down areas, stockpiles, equipment staging and other activities necessary to support the construction project. If additional or alternate space is needed a written request and site map showing the areas requested must be submitted to NREL for approval.

B. NREL will provide the following:

1. Electrical power and metering, consisting of availability. NREL shall provide access to temporary power and gas. The Subcontractor will be required to provide all necessary connections, meters and other elements required by the Subcontractor to gain access to electrical power and gas. NREL will pay only the utility charges. The Subcontractor will pay for any costs associated with connection.
2. Water supply, consisting of availability. Subcontractor shall provide all necessary connections, meters and other elements required by the Subcontractor to gain access to water supply. The water supply will be made available through the coordination of the Subcontractor and Consolidated Mutual. Terms and agreements for water consumption will be the responsibility of the Subcontractor and the service provider.

C. Provide the following for the use of NREL:

1. Desk space in field office on site, furnished, heated, and cooled.
   a. Capacity: three (3) standard size offices for three (3) persons.
2. Telephone, Internet, and fax service in field office on site.
3. Vehicular Access and Parking: Comply with regulations relating to use of streets and sidewalks, access to emergency facilities, and access for emergency vehicles.
   a. The Subcontractor is required to park off-site or provide space in the site use area for parking of Subcontractor personnel
   b. Provide 3 (three) parking spaces reserved for use of NREL immediate to the field office.
4. Security: Protect the work, subcontractor facilities and equipment, and NREL's operations from unauthorized entry, vandalism, and theft.
5. Project Identification Sign: By Subcontractor to NREL's design and/or approval.
   a. No other signs allowed on site without NREL's permission except those required by law.
6. Removal of Temporary Facilities, Utilities, and Controls: Prior to Substantial Completion; including clean up, restoration of existing facilities used to original condition, and repair of damage.
7. Pre-Construction Survey: To be prepared by Subcontractor; control and reference points will be based on the "South Table Mountain Overall Site Plan".
8. Work by NREL: NREL will perform the following work, with his own forces or using other Subcontractors:
   a. Final design and location of site utility systems indicating where the subcontractor will need to access the main utility loops for this project. The subcontractor is responsible for connecting the utilities (water, sewer, power (natural gas and electricity), telecom, data, cooling water loop, heating water loop) for this project to these supply points. The <u>approximate</u> locations of these are currently known and shown in Section 9.3. Final location information will be provided by NREL at the end of calendar year 2009.

D. Excavation Spoils

1. There is very little space on the South Table Mountain campus to dump spoils from excavation or over-excavation. We can be flexible but large amounts of spoils cannot be accommodated on campus and will need to be removed.

2. Withdrawal form the existing excavation spoils pile is permissible provided that other activities planned for the stockpile area are not impacted.

8.9 CLOSEOUT REQUIREMENTS

8.9.1 Closeout Submittals

A. Operations and Maintenance Manuals: Assemble system design information, approved equipment shop drawings, submittals, operation and maintenance data, and copies of warranties into manuals, organized by functional system (e.g. plumbing, HVAC, etc.) or material type (e.g. flooring, wall finishes, etc.) as appropriate using specification numbers where applicable.

1. Binders: 3-ring, D-ring, with hard cover, project title on spine, Table of Contents in each volume, and stiff dividers with labeled tabs; contents divided into logical binders not more than 3 inches (75 mm) thick.
2. Directory: Names, addresses, telephone numbers, of all design and construction entities, including subcontractors and suppliers, with names of products supplied.
3. Software-Operated Systems and Equipment: Detailed program documentation, a general review of the programming approach, description of use on this project, and description of possible user-modifications.
4. Drawings: Bound into manuals, folded to size of binder.
5. Product Listing: Manufacturer's brand name for each major product actually installed, in alphabetical order by generic product name, cross-referenced to specification numbers and Table of Contents of manuals.
6. Warranties: Photocopies of originals.
7. Video recording of training sessions.

B. Project Record Documents: During construction maintain on site one set of all documents forming the subcontract, including drawings, recording all changes made by amendment, by formal modifications, and in performing the work, for NREL's future reference.

1. Storage: Separately from documents used for construction, in location where they can be kept clean and safe from fire and damage.
2. Changes to be recorded Include:
   a. Actual measured locations (horizontal and vertical) of foundations and concealed utilities and appurtenances, referenced to visible permanent appurtenances.
   b. Field changes of dimension and detail and details not on original documents.
   c. Actual products used, in specification, with brand name or model number.
3. Submittal Copy of Drawings: All marks copied to a clean set of prints.

C. Final Site Survey: Pre-construction survey updated after completion of foundations, verifying location and level of permanent benchmarks and control points, utility access points, and principal improvements.

D. Spare Parts and Extra Materials: As specified for specific products; delivered to location on project site designated by NREL; with receipt from NREL.

E. Maintenance Supplies and Tools: As specified for specific products; delivered to location on project site designated by NREL; with receipt from NREL.

8.9.2 Demonstration and Training

A. Coordinate all activities with NREL's Commissioning Agent.

B. Demonstration: For each equipment item and system, demonstrate all operational modes to NREL at time acceptable to NREL; if defects occur during demonstration, demonstration must be rescheduled for a time acceptable to NREL.

C. Training: Perform training of NREL's personnel in operation and maintenance of equipment, consisting of:

1. Training is required for all software-operated systems, HVAC systems and equipment, plumbing

equipment, electrical systems and equipment, conveying systems, and other electrically-operated equipment.

a. Provide supplemental training within six (6) months for operations that are seasonal in nature.

2. Instruction in operation, control, adjustment, shut-down, servicing, troubleshooting, and maintenance, for each equipment item for which training is specified.
3. Instruction in care, cleaning, maintenance, and repair of materials, for:
   a. Each item for which training is specified.
   b. Roofing, waterproofing, other weather-exposed or moisture protection products.
   c. Finishes, including flooring.
   d. Fixtures and fittings.
   e. Subcontractor provided research and laboratory equipment.
   f. Items as specified in other Sections.
4. Major Software-Operated Systems: Training by software manufacturer at NREL's facility for minimum of one NREL staff members, with take-home training materials.
5. Training Location: If not otherwise specified, conduct training in a classroom on site, with videotapes made for future use.
6. Minimum Qualifications of Trainers: Knowledgeable about the project and the equipment and trained by the manufacturers.
7. Maintenance Manuals: Ready for use in training.

8.9.3 Operation and Maintenance

A. Coordinate all activities with NREL's Commissioning Agent.

B. Operation and Maintenance: Subcontractor is responsible for the following:
   1. Preparation of maintenance plan for NREL's use, including description of maintenance activities, tools, and supplies required.
   2. Periodic maintenance service as specified, for one year from the date of Substantial Completion, for the following:
      a. Roofing.
      b. Elevators.
      c. Escalators.
   3. Services will be included under Subcontractor's subcontract with NREL.
   4. Individual operation and maintenance subcontracts will be between maintenance organization and NREL.
   5. Maintenance Services: Examination at frequency consistent with reliable operation; cleaning, adjusting, and lubricating; replacement of parts whenever required, using parts produced by the original manufacturer.
   6. Maintenance Organizations: Approved by manufacturer and NREL; transfer or assignment of subcontracts without prior written consent of NREL not allowed.

C. Post-Occupancy Survey: Conducted by NREL, of actual occupants after minimum of six (6) months of full occupancy and operation and again after one (1) year.
   1. Purpose of Survey: Subjective evaluation of function and quality of occupants' spaces and project as a whole. Survey questions will include but not limited to:
      a. Is the room temperature in your work area comfortable? Is the performance of the heating/air conditioning system acceptable?
      b. Does the amount of direct lighting in your work area meet your needs and expectations?
      c. Does the amount of outside natural light into your work area meet your expectations based on the design and location of your work area?

d. Is noise from other work areas or outside sources not objectionable in your work area?
e. Does the performance of the equipment you use in your work area meet your expectations? (Excluding NREL-provided equipment.)
f. Does the appearance of the building both inside and outside project the appropriate image to the community and our customers?
g. Is the building user-friendly? Have features been placed where they are convenient and readily accessible?
h. Does the quality of construction meet your expectations? Do finishes, trim, and painting demonstrate the expected level of quality?
i. Is the number of corrective repairs or warranty claims during the first 90 days of occupancy less or more than you would expect with a major new facility?
j. How would you rate the new building, overall, on a scale of 1 to 10 (lowest to highest), realizing that it would be impossible to completely please everyone?

End of Section - Design and Construction Procedures

9. NREL Provided Information
    - 9.1 Site Utilization
    - 9.2 Geotechnical Engineering Information
        - 9.2.1 Gatehouse and Visitor Center (Geotechnical Engineering Study), dated January 25, 1993
        - 9.2.2 Science and Technology Facility (Geotechnical Engineering Report), dated November 11, 2002
        - 9.2.3 Proposed Southern Addition (Subsurface Exploration Program – Geotechnical Recommendations), dated September 5, 2008
    - 9.3 ESIF Utility Points of Connection
    - 9.4 West Metro Fire Protection District Requirements
        - 9.4.1 West Metro Fire Rescue - Supplemental Rules and Regulations
        - 9.4.2 Resolution No. 2007-3 Fire Code West Metro Fire Protection District
    - 9.5 LEED™ Report
        - 9.5.1 LEED™ Report
        - 9.5.2 LEED™ Scorecard
    - 9.6 NREL's Quality Assurance Plan
    - 9.7 NREL Safety Manual
    - 9.8 NREL Site Operations Computer Aided Design Manual
    - 9.9 Energy Goals
    - 9.10 Systems Furnishings (Perf Spec E23)

9.1 Site Utilization

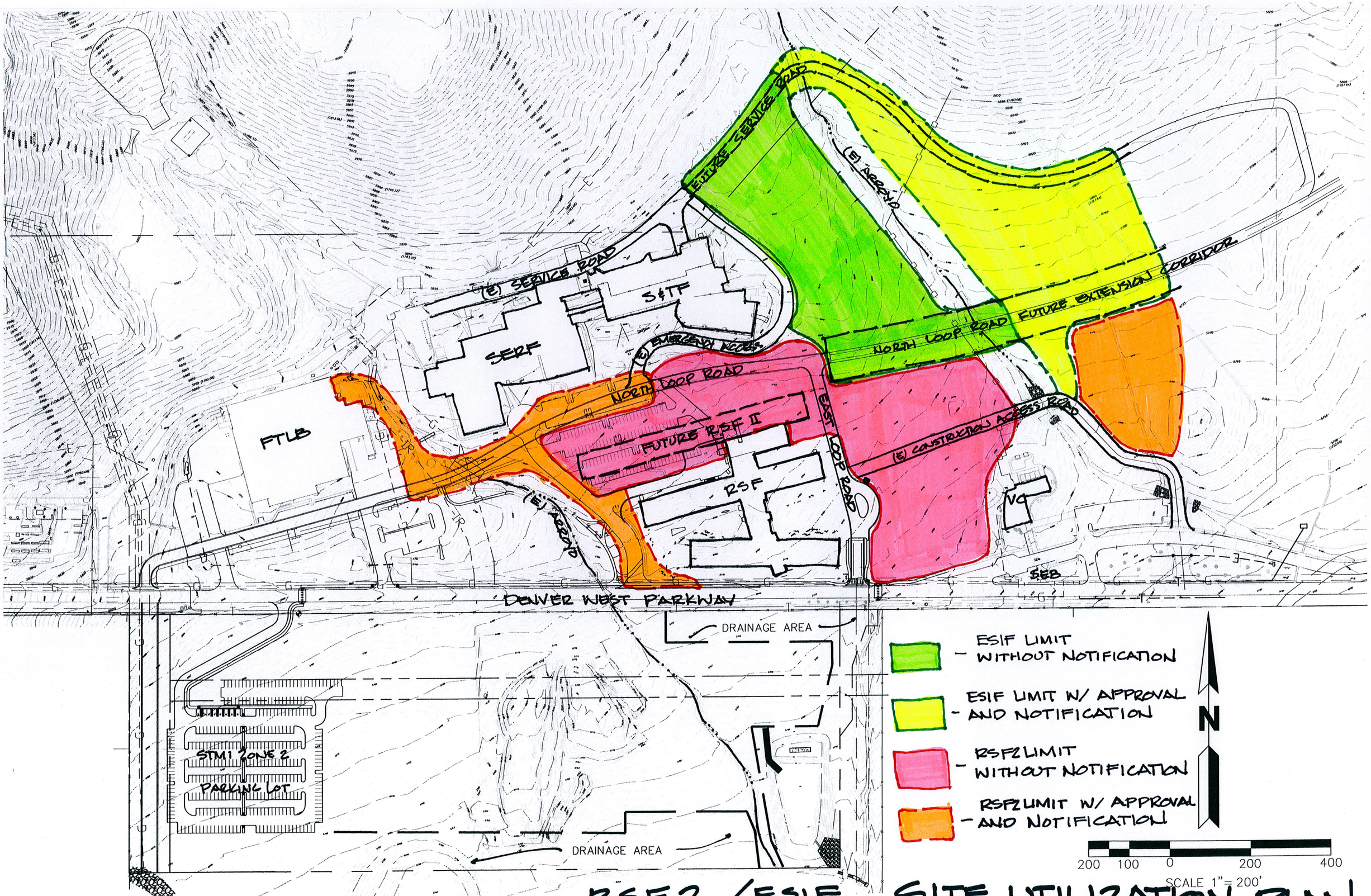

RSF2 / ESIF SITE UTILIZATION PLAN

9.2 Geotechnical Information

Note: Adobe file copies of the Geotechnical reports are available from the Subcontract Administrator

9.3 ESIF Utility Points of Connection

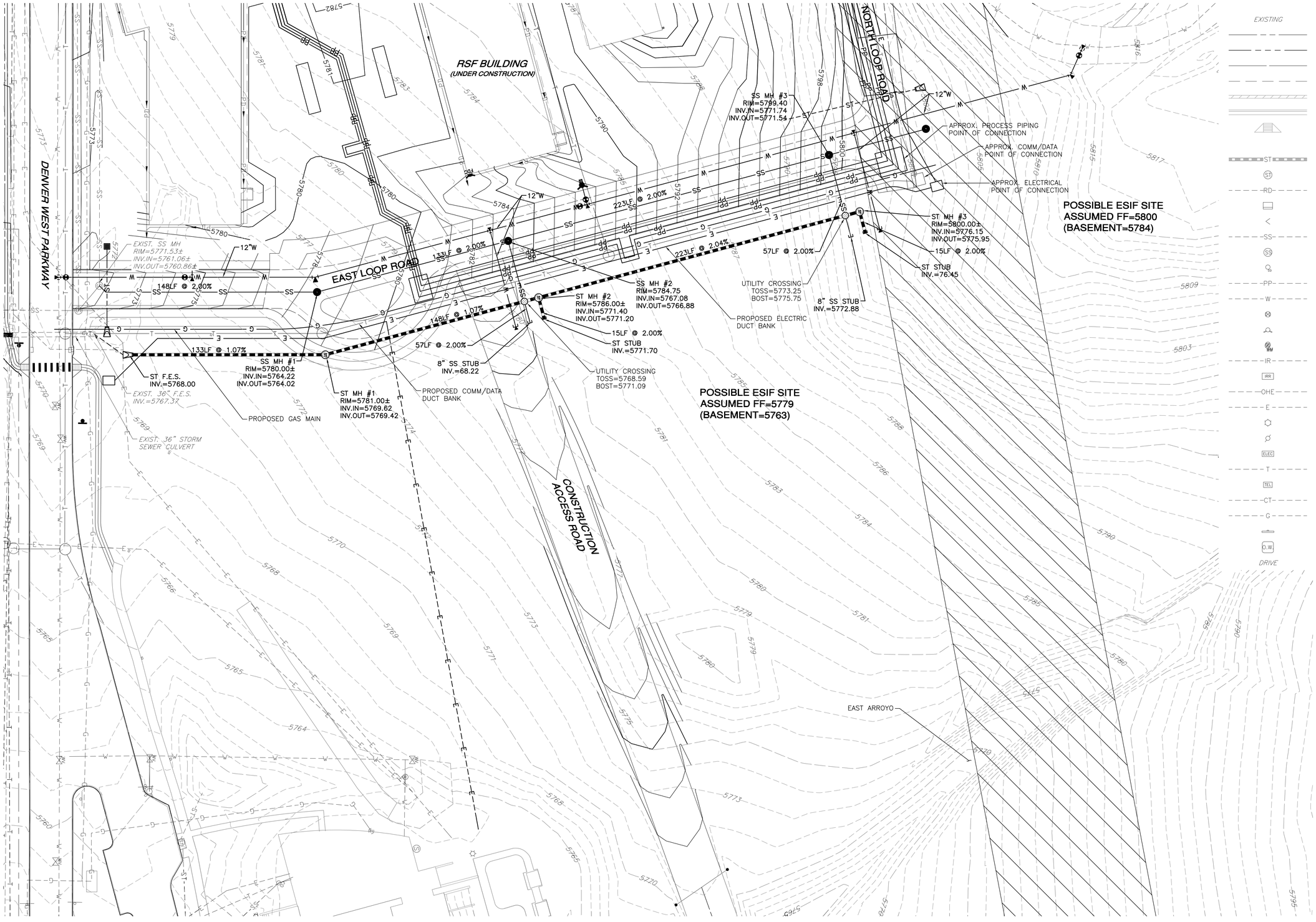

LEGEND

EXISTING		PROPOSED
	PROPERTY LINE	
	RIGHT-OF-WAY LINE	
	SECTION LINE	
	EASEMENT	
	RETAINING WALL	
	CURB & GUTTER	
	HANDICAP RAMPS	
	UTILITY CROSSING	
ST	STORM SEWER	ST
ST	STORM MANHOLE	
RD	ROOF DRAIN	RD
	STORM INLET	
	FLARED END SECTION	
SS	SANITARY SEWER	SS
SS	SANITARY MANHOLE	
	CLEAN OUT	CO
PP	PROCESS PIPING	PP
W	WATER LINE	W
	WATER VALVE	
	FIRE HYDRANT	
WM	WATER METER	
IR	IRRIGATION LINE	IR
IRR	IRRIGATION CONTROL	IRR
OHE	OVERHEAD ELECTRIC	
E	ELECTRIC LINE	E
	LIGHT POLE	
	POWER POLE	
ELEC	ELECTRIC METER	
T	TELEPHONE LINE	T
TEL	TELEPHONE PEDESTAL	T
CT	CABLE TV	CT
G	GAS LINE	G
	SIGN	
O.W.	MONITOR WELL	
DRIVE	DESCRIPTIONS	DRIVE

KEY

SS– SANITARY SEWER
ST– STORM SEWER
W– WATER
MH– MANHOLE
INV.– INVERT
FES– FLARED END SECTION
LF– LINEAL FEET
FF– FINISHED FLOOR
TOSS– TOP OF SANITARY SEWER
BOST– BOTTOM OF STORM SEWER

ESIF UTILITY POINTS OF CONNECTION

PRELIMINARY
EAST LOOP ROAD
UTILITY LAYOUT

N

30 15 0 30 60
SCALE: 1"=30'

NOTE: THESE DRAWINGS REPRESENT COMPLETED SCHEMATIC DESIGN CONDITIONS FOR EACH SPECIFIED LOCATION. FINAL CONSTRUCTION MAY NOT INCLUDE ALL SPECIFIED DESIGN CONDITIONS AS INDICATED BY THESE DRAWINGS.

PROGRESS PRINT - NOT FOR CONSTRUCTION

NO.	REVISIONS	DATE	BY	APP'D.	BAE	NO.	REVISIONS	DATE	BY	APP'D.	BAE

FILE INFORMATION			
USER:	DATE:	TIME:	XREF'S:
DWG. FILE:		LAYOUT:	
DWG. FOLDER:			
ACAD VERSION:			
PLATFORM:			
BORDER: ZBD2234D-3.DWG	PLOT SCALE:		UNITS:
PLOT INFO.:			

ENGINEERING REVIEW	APPROVAL	DATE
DESIGNER		
ENGINEER		
CHECKED BY		
A/E APPROVED BY		
NREL APPROVED BY		
BLDG. AREA ENG.		

NREL
National Renewable Energy Laboratory
1617 Cole Boulevard
Golden, Colorado 80401-3393
Operated for the
U.S. Department of Energy
by the Alliance for Sustainable Energy, LLC

STM CIVIL

SITE INFRASTRUCTURE
EAST LOOP ROAD UTILITIES
SANITARY & STORM SEWER
FOR CONNECTION TO ESIF

DRAWING NO. PREFIX	DRAWING NO.	REVISION NO.
RSF-000	C900	.
NREL PROJECT NO.	**NREL WORK ORDER NO.**	**A/E PROJECT NO.**
EX20060101	.	1060-2858-01

C:\HARRIS\20772C-NREL Infrastructure\PLANS\GD'S\C900_EAST LOOP UTILITY PLAN.dwg LAST PLOTTED ON 07/21/2009 - 14:42 BY Whaley

9.4 West Metro Fire District Requirements

WEST METRO FIRE RESCUE
SUPPLEMENTAL RULES AND REGULATIONS
For
Energy Systems Integration Facility
National Renewable Energy Laboratory
1617 Cole Boulevard
Golden, CO 80401

West Metro Fire Rescue
447 South Allison Parkway
Lakewood, CO 80226
Supplemental Rules and Regulations
Administrative Modification to the Addendum to the International Fire Code as adopted by the West Metro Fire Protection District and the City of Lakewood Article 14 of the City Municipal Code.
Number UFC 02-1001.9 IFC 02-102.8
Chapter 9, Section 907.20.6
Public Safety Radio Amplification
Effective April 22, 2002, Revised October 13, 2003 for the adoption of the West Metro Fire Protection District Fire Code.
Effective August 30, 2003 for the adoption of International Code 2003, Revised October 13, 2003 by Administrative Modification by the West Metro Fire Marshal.

AUTHORITY:
Section 101.4 of the 1997 Uniform Fire Code and Section 104.1 of the 2000 and 2003 International Fire Code authorizes the Chief to render interpretations of this code and to make and enforce rules and regulations in order to carry out the application and intent of its provisions.

PURPOSE:
To establish a West Metro Fire and Rescue Supplemental Rule regarding public safety radio amplification requirements.

SCOPE:
These Supplemental Rules and Regulations cover all new construction or building remodels in the West Metro Fire Rescue District after the effective date.

GENERAL:
West Metro Fire Rescue has determined that within some occupancies in the district a "special hazard" exists in addition to the normal hazard of the occupancy. Due to the building size and/or building construction emergency service personnel may have trouble using their portable radios. Bases on the current codes and standards the issue of public safety radio amplification in buildings is not fully addressed. It is the position of West Metro Fire Rescue that it is the responsibility of building owners to provide for emergency communications within their buildings.

SUPPLEMENTAL RULE OR REGULATION:
Section 101.3 of the Uniform Fire Code and Section 104.l of the 2000 International Fire Code authorizes the chief to make and enforce rules and supplemental regulations in order to carry out the application and intent of its provisions. Section 1001.9 of the Uniform Fire Code and Section 102.8 of the 2000 International Fire Code authorizes the chief to require additional safeguards consisting of special systems suitable for the protection of the hazard involved. Therefore, West Metro Fire Rescue requires that a public safety radio amplification system shall be installed within certain buildings and structures within the West Metro Fire Rescue district to provide for emergency communications to and from the emergency communication center. It is the responsibility of the emergency service provider to get the signal into and from the building. This document establishes a uniform practice on the installation of a public safety radio amplification system to insure a reasonable degree of reliability for emergency services communication from within certain buildings and structures within the West Metro Fire Rescue District to and from the
emergency communication center.

These provisions apply to:

1. New buildings and structures greater than 50,000 square feet or additions and/or modifications of 10 percent re-model or alteration existing structure which cause the buildings to be greater than 50,000 square feet. (for purposes this section, area separation walls cannot be used to define separate buildings).
2. All basements over 10,000 square feet where the design occupant load is greater than 50, regardless of the occupancy.
3. Any building that creates a "special hazard" for emergency services communication in addition to the normal hazard of the occupancy.
4. Any building additions or remodel work involving over 20 % of the building.

Radio Coverage:
Except as otherwise provided in this SRR, no person shall erect, construct, or modify any building or structure or any part thereof, or cause the same to be done which fails to support adequate radio coverage for emergency services providers. For purposes of this section, adequate radio coverage shall constitute a successful communications test between the building interior and the communications centers for the appropriate emergency service providers for the building.

Enhanced Amplification Systems:
Where buildings and structure are required to provide amenities to achieve adequate signal strength, such buildings and structures shall be equipped with any of the following to achieve the required adequate radio coverage: radiating cable systems, internal multiple antenna systems with a frequency range as established by West Metro Fire Rescue, with amplification systems as needed, voting receiver system, or any other system approved by the authority having jurisdiction. If any part of the installed system or systems contains an electrically powered component, the system shall be capable of operation on an independent battery and/or generator system, from power sources on the emergency circuits, for a period of at least four hours without public service power input or maintenance. The battery system shall automatically charge in the presence of external power input.

System Design:
Radio amplification system design must be coordinated between the property owner, vender, West Metro Fire Rescue, and the communications center. Upon request by the owner, or the owner's agent, the West Metro Fire Rescue will identify the frequency range or ranges that must be supported. System designs shall be drafted and engineered by qualified radio engineers or vendors approved by the West Metro Fire Rescue Fire Prevention Bureau. Fire Alarm contractors / and or electricians approved for other installations do not automatically qualify for design qualifications of radio engineering design.

Performance Requirements - Inbound into the Building:
I. A minimum average in-building field strength of (-85 dBm) throughout 95% of the area of each floor of the building when transmitted from the appropriate emergency service dispatch centers which are providing fire and emergency medical protection services to the building.
2. As used in this regulation, 95% coverage or reliability means the radio will transmit 100% of the time at the field strength and levels as defined in this regulation within 95% of the building's area.
3. If the field strength OUTSIDE the building where the receive antenna system for the in-building system is located is less than the (-85 dBm), then the minimum required in-building field strength shall equal the field strength being delivered to the receive antenna of the building.
4. All essential components shall be installed in a room accessible for repair and testing within the structure that is rated at 2-hours. The circuits shall be monitored on a supervisory circuit on a fire alarm panel for emergency power and operational readiness of the system.

Performance Requirements - Outbound from the Building:

1. A minimum average signal strength of (-90 dBm) as received at the appropriate emergency service dispatch centers which are providing fire and emergency medical protection services to the building (-90 dBm).

FCC Authorization:
Equipment must be FCC Type Accepted and in compliance with FCC Rules and Regulations.

West Metro Fire Rescue Permit and Submittal Requirements:
West Metro Fire Rescue requires a permit before the installation of all radio amplification systems that support emergency communications. The following information must be submitted:

Letter of Understanding
A letter of understanding that explains the systems capabilities and limitations of the system being installed.

Working Plans
Three sets of working plans shall be submitted for approval to the authority having jurisdiction before any equipment is installed or remodeled. Deviation from approved plans shall require permission of the authority having jurisdiction. Working plans shall be drawn to an indicated scale, on sheets of uniform size, with a plan of each floor, and shall show those items from the following list that pertain to the design of the system.

Radio Frequency Field Strength Information:
1. Location, date, and time of field strength test.
2. Test conducted by or information supplied by.
3. Other sources of radio frequency field strength information.
4. List of frequencies and bandwidth calculations to be included in system.
5. Radio frequency field strength test results.

Building Plans:
1. Name and address of contractor.
2. Name of owner and occupant.
3. Location, including street address.
4. Point of compass.
5. Full height cross-section, or schematic diagram including structural member information if required for clarity and including ceiling construction and method of protection for nonmetallic piping.
6. Location of partitions.
7. Location of firewalls.
8. Occupancy class and use of each area or room.
9. A graphic representation of the scale used on all plans.

System Equipment and Plans: Shop Drawing and construction Plans
1. Make, type, model and size of all cable, amplifiers, antennas, batteries, etc.(spec sheets).
2. Location of all cable, amplifiers, battery panels, etc.
3. Type and locations of hangers, sleeves, braces, and methods of securing cable and antennas, when applicable.
4. Battery and battery charging calculations.
5. System design calculations.
6. Where the equipment is to be installed as an addition to an existing system, enough of the existing system indicated on the plans to make all conditions clear. The working plan submittal shall include the manufacturer's installation instructions for any specially listed equipment, including descriptions, applications, and limitations for any cable, amplifiers, antennas, batteries, etc.

System Testing and Acceptance:
Once implemented, the RF coverage system should be tested via the pre-determined Acceptance Test Plan (ATP), The ATP should include personnel from the facility, fire, police, and the vendor. The ATP must be approved in advance by West Metro Fire Rescue. A walk through test should be completed and any discrepancies noted and resolved by the vendor. All test records shall be retained on the inspected premises and a copy submitted to the fire department officials.

Acceptance Test Plan (ATP):
The following method will be used to conduct the tests:
1. Tests shall be on the actual frequencies utilized by the emergency services.
2. This testing must be coordinated with the appropriate emergency services.
3. All testing must be done on frequencies that are authorized by the FCC.

Measurements Shall Be Made Using The Following Guidelines:
1. With a service monitor using a unity gain antenna.
2. Measurements shall be made with the antenna hold in a vertical position at approximately 3 feet above the floor.
3. A calibrated service monitor (with a factory calibration dated within 12 months) may be used to make the tests.
4. If measurements in a location are varying, then average measurements may be used.
5. The Special Inspector for West Metro Fire Rescue will do a hands-on radio test to check the areas for proper radio operation/reception.

Initial Tests:
All testing shall be done in the presence of the Special Inspector for West Metro Fire Rescue.
1. Signal strength, both inbound and outbound as defined above, shall be measured on each and every floor above and below ground including stairwells, basements, penthouse facilities, and parking areas of the structure.
2. The structure shall be divided into 25-foot grids and the measurements shall be taken at the center of each grid. In critical areas as determined by West Metro Fire Rescue (Fire Command Center's, elevators, stairwells, protect-in place areas, lobby refuge areas, equipment rooms, high hazard areas basements, and underground parking areas) the grids shall be reduced to 10-feet. The size of the grids may also be reduced upon recommendations of the Special inspector, in areas where displays, equipment, stock or any other obstruction may significantly affect communications in those seas.
3. The test shall be conducted using a portable radio approved by West Metro Fire Rescue, talking through the West Metro Fire Rescue communications system.
4. A spot located approximately in the center of a grid sea will be selected for the test.
5. The radio will be keyed to verify two-way communications to and from the outside of the building through dispatch. Once the spot has been selected, prospecting for a better spot within the grid area will not be permitted
6. Each grid area will be tested for proper transmission/reception. If signal strength fails to meet the requirement, the grid area shall be marked as a fail.
7. The gain values of all amplifiers shall be measured and the test measurement results shall be kept on file at the facility and the fire department, so that the measurements can be verified each year during the annual tests. In the event that the measurement results became lost, the building owner will be required to rerun the acceptance test to reestablish, the gain values.

Annual Tests by Property Owner:
The property owner shall conduct an annual test of all active components of the system, including but not limited to amplifiers, power supplies and backup batteries, a minimum of once every twelve (12)

months. Amplifiers shall be tested to ensure that the gain is the same as it was upon initial installation and acceptance. Backup batteries and power supplies shall be tested under load for a period of one (1) hour to verify that, they will properly operate during an actual power outage. If within the one (1) hour test period, in the opinion of the testing technician, the battery exhibits symptoms of failure, the test shall be extended for additional one (1) hour periods until the testing technician confirms the integrity of the battery. All other active components shall be checked to determine that they are operating within the manufacturer's specifications for the intended purpose.

Annual Tests by Emergency Response Agencies:
Annual tests shall also be conducted by the fire department, police department or both. If the communications appear to have degraded or if the tests fail to demonstrate adequate system performance, the owner of the building or structure is required to remedy the problem and restore the system in a manner consistent with the original approval criteria. If the degradation to the system is due to building additions or remodeling, the owner of the building or structure is required to remedy the problem and restore the system in a manner consistent with the original approval criteria in order to obtain a final inspection for occupancy. All equipment shall be maintained in working order and shall be useable by fire department personnel without notice. In the event equipment is not functional, the District reserves the right to require temporary equipment to assure communication within the structure at the owner / occupant’s expense.

Field Testing:
Fire and police personnel, after providing reasonable notice to the property owner, shall have the right to enter property to conduct field-testing to be certain that the required level of radio coverage is present. Discrepancies from field-testing and recorded tests shall immediately be brought to the attention of the property owners who will provide corrective action in response to reported discrepancies.

Permitting:
The West Metro Fire Rescue Fire Prevention Bureau will issue a permit for all installations to the contractor of record. The permit is sole property or the contracting radio engineer and may be transferred with written authorization of the Fire Marshal and the authorized contractor. All fees will be waived if submitted for initial shell / core / tenant finish review submittals.

Resolution No. 2007-03
Fire Code
West Metro Fire Protection District

A RESOLUTION ADOPTING THE 2006 EDITION OF THE INTERNATIONAL FIRE CODE, REGULATING AND GOVERNING CONDITIONS HAZARDOUS TO LIFE AND PROPERTY FROM FIRE OR EXPLOSION, AND PROVIDING FOR THE ISSUANCE OF PERMITS FOR HAZARDOUS USES OR OPERATION.

WHEREAS, the Board of Directors of the West Metro Fire Protection District have previously adopted the 2003 International Fire Code in part; and

WHEREAS, the Board of Directors deems it necessary to adopt the following code for the purpose of establishing rules of conduct and standards for the protection of life, health, property, security and welfare of the inhabitants of the District; and

WHEREAS, the Board of Directors has considered the effect of fire code enforcement within the boundaries of the District and has determined that enforcement of the proposed codes would not cause undue hardship or suppression of economic growth within the District; and

WHEREAS, the Board of Directors has studied the necessity for realistic and reasonable level of fire protection to be provided by an urban fire protection district;

NOW, THEREFORE BE IT RESOLVED THAT:

SECTION I: Adoption of the 2006 International Fire Code.

There is hereby adopted by the West Metro Fire Protection District for the purpose of prescribing regulations governing conditions hazardous to life and property from fire, hazardous materials, or explosion, that certain Codes known as the International Fire Code, including Appendix Chapters: **B** (Fire-Flow Requirements for Building), **C** (Fire Hydrant Locations and Distribution), **D** (Fire Apparatus Access Roads) with specifications approved by the Fire Marshal, **E** (Hazard Categories), **F** (Hazard Ranking), **G** (Cryogenic Fluids-Weight and Volume Equivalents), as published by the International Code Council, being particularly the 2006 edition thereof and the whole thereof, save and except such portions as are hereinafter deleted, modified, or amended by the Resolution, of which said Code are now filed in the offices of the West Metro Fire Protection District, and the same are hereby adopted and incorporated as fully as if set out at length herein.

The date on which this Resolution shall take effect within the incorporated municipalities within this District shall be the date of approval by the governing board of said municipality and the date on which it shall take effect within the unincorporated portions of Jefferson County and Douglas County shall be on the date of approval by the Board of County Commissioners in and

12

for Jefferson County, State of Colorado and Douglas County, State of Colorado. This Code shall be in effect within the territorial limits of the West Metro Fire Protection District.

SECTION II: Establishment and Duties of Life Safety Inspectors.

Organizational structure and duties of the Life Safety Division shall be as provided by the District's rules and regulations and internal organizational structure.

SECTION III: Definitions. The following definitions shall be utilized in addition to those set forth in the International Fire Code:

Wherever the word "jurisdiction" is used, it is meant to be inclusive of the boundaries of the West Metro Fire Protection District as they now or may hereafter exist.

Where the term "Chief" or "Chief of the Life Safety Division, is used, it shall be held to mean the Chief of the West Metro Fire Protection District, or the District Fire Marshal or a designated member of the District.

Where the term "Board" is used, it shall be held to mean the Board of Directors of the West Metro Fire Protection District.

Wherever the term "International Building Code" is used, it shall be held to mean the International Building Code as adopted, amended and incorporated into the Jefferson County Building Code for unincorporated portions of Jefferson County or the International Building Code as adopted, amended and incorporated into the applicable municipality's Building Code within a municipality's territorial limits. Wherever the term "International Building Code" is used, it shall be held to mean whatever Building Code (Uniform/International) as adopted amended and incorporated into the Douglas County Building Code for unincorporated portions of Douglas County.

Wherever the term "Automatic Fire Detection System" is used, it shall be held to mean total coverage by automatic and manual initiating devices in all accessible areas and shall include all rooms, halls, storage areas, basements, attics, lofts and other subdivisions and accessible spaces; and the inside of all closets that are able to be walked into, elevator shafts, enclosed stairways, dumbwaiter shafts, and chutes. Inaccessible areas shall not be required to be protected by detectors. Notification/Audible appliances shall be installed to National Fire Protection Association (NFPA) standards. Audible and visual notification layout and configuration shall be approved. Variances to this requirement may be granted by the code official when equal or greater life safety protection is provided.

SECTION IV: Amendments made in and to the International Fire Code.

The International Fire Code is amended and changed in the following respects:

- 1. Chapter 1, Subsection 102.10 shall be added to read as follows: Section 102.10 Application of residential code. Where structures are designed and constructed in

accordance with the International Residential Code, the provisions of this code shall apply as follows:

(a) Construction and design provisions: Provisions of this code pertaining to the exterior of the structure shall apply including, but not limited to, premises identification, fire apparatus access, and water supplies. Construction permits for systems and equipment utilized in the interior or exterior or the structure shall also apply.

(b) Administrative, operational, and maintenance provisions: All such provisions of this code shall apply.

References in this code to Group R-3 or U occupancies or one- and two-dwelling and townhouses shall apply to structures under the scope of the International Residential code except as limited by this section.

- 2. Chapter 1, Subsection 103.4 shall be amended by the addition of the following sentence: "Nothing herein shall be construed as a waiver of immunities provided by §24-10-101, *et seq.,* C.R.S. or by other statues, or by the common law."

- 3. Chapter 1, Subsection 104.10.1 shall be amended by the addition of the following paragraph: "The authority of the Chief of the District or designated members of the Life Safety Division and Department to act as police officers shall only extend as far as the authority set forth in §32-1-1002, C.R.S., or other applicable state statues."

- 4. Chapter 1, Subsection 105.1.2 shall be amended by the addition of the following subsubsection: 3. Operational permits or other inspection permits required by the code may be required and Construction permits shall be required.

- 5. Chapter 1, Subsection 105.6.30, Open Burning: delete the exception (Recreational fires).

- 6. Chapter 1, Section 108 shall be amended by the deletion of said Section in its entirety and by the insertion of the following:

  (a) The District's Board or its designee, the Appeals Committee shall determine the suitability of the alternate materials and methods and type of construction and provide reasonable interpretations of the provisions of this Code upon the request of any interested party, including the Chief.

  (b) The Board, upon recommendation of the Appeals Committee or the chief or upon its own motion, may enter into written agreements for enforcement or compliance with the owner, lessee, occupant or authorized agent thereof, of any property, building or structure, or any interested person directly affected by the application of this code. Said agreements may extend the time for compliance with this code, and may contain such terms and conditions that the

Board deems appropriate to adequately protect the life, health, property, security and welfare of the general public.

(c) Persons within the territorial limits of the City of Lakewood aggrieved under this code may file and appeal with the Board of Appeals of the City of Lakewood as may be provided in the Lakewood Municipal Code.

(d) Persons within the territorial limits of Douglas County aggrieved under this code may file and appeal with the created Regional Fire Code Board of Appeals adopted by the Douglas County Commissioners.

(e) Persons not within the territorial limits of the City of Lakewood or the territorial limits of Douglas County aggrieved under this code may file an appeal with the Board of the West Metro Fire Protection District under Chapter 1, Section 108 of the International Fire Code. The Appeal shall be heard by the subcommittee of three members of the Board, designated annually by the Board as members of the Appeal Committee. The decision of the Appeal Committee shall be deemed as final agency action for purposes of any grievant seeking judicial review of an adverse decision.

❖ 7. Chapter 1, Subsection 109.3 and 111.4, Violation penalties and Failure to comply, shall be amended by the addition of the following sentence: City ordinance and County resolutions will stipulate what the offense(s) will be.

❖ 8. Chapter 1, Subsection 111.4, delete the following, "shall be liable to a fine of not less than (Amount) dollars or more than (Amount) dollars," and replace with: "shall be subject to fine and/or imprisonment up to the maximum specified in §32-1-1001 and 32-1-1002, C.R.S."

❖ 9. The following is added as an addition to Chapter 1:

Section 112 Inspection Fees:

(a) Pursuant to §32-1-1002 (1)(e)(II) C.R.S., the Board may fix and from time to time may increase or decrease fees and charges, at its discretion, for inspections and review of plans and specifications, which are:

(1) Requested or mandated for existing structures, buildings and improvements; and

(2) Necessitated in conjunction with any county regulation, resolution or condition of development; or

(3) Performed in conjunction with the construction of new structures, buildings, and improvements.

(b) Said fees and charges may, at the discretion of the Board, include a charge for reimbursement to the District of any consultation fees, expenses or costs incurred by the District in the performance of the inspections or review of the plans and specifications.

- 10. Chapter 1, Section 113 shall be added as a new section to read as follows: Section 113 "This Chapter shall be interpreted to be consistent with the provision of §32-1-1002(3), C.R.S."

- 11. Subsection 503.2.1, Dimensions: Change width dimension from 20 feet to 24 feet.

- 12. Subsection 508.5.1, Where required: Delete the exceptions.

- 13. Chapter 5, Section 511 shall be added as a new section and read as follows: Fire Department Radio Amplification System: The AHJ may require additional communication equipment to be installed to amplify emergency services communication from within buildings and structures within the West Metro Fire Protection District to and from the emergency communications center. The scope of this provision shall apply to:

    1. New buildings and structures greater than 50,000 square feet or additions and/or modifications which cause the buildings to be greater than 50,000 square feet. For the purposes of this section, fire walls shall not be used to define separate buildings.

    2. All basements over 10,000 square feet where the design occupant load is greater than 50, regardless of the occupancy classification.

    3. Existing buildings meeting the criteria of Item #1 or #2 of this section undergoing alterations exceeding 50% of the aggregate area of the building.

       Exception: One- and two-family dwellings and townhouses.

    4. Design and installation standard. Public safety radio amplification systems shall be designed and installed in accordance with the criteria established by the fire code official based on the capabilities and communication features of emergency services.

    5. Maintenance. Public safety radio amplification systems shall be maintained in an operative condition at all times and shall be replaced or repaired where defective.

6. Emergency Amplification System power supplies shall be hardwired (in conduit) into the building's emergency power (generator) circuit. In buildings not equipped with emergency power, the emergency amplification shall be configured so that a loss of any supply power will indicate a trouble alarm on the fire alarm control panel.

7. Contact the West Metro Fire Protection Districts Communication Officer for required specifications.

- 14. Subsection 603.4, Delete and replace with: "Upon approval of the Fire Marshal, portable unvented oil burning heating appliances may be permitted in any occupancy during the construction process when such use is necessary for the construction and the use does not represent a hazard to life or property".

- 15. Subsection 901.6, Add to Section: The Fire Marshal shall approve the removal of any nonrequired fire protection systems or equipment.

- 16. Subsection 905.1, Add to Section: All standpipe outlets shall be equipped with a two and one/half inch outlet with a one and one/half inch reducer.

- 17. Subsection 907.2, In the first paragraph delete in accordance with Section 907.2.1 through 907.2.23 and replace with: "All occupancies over 3600 square feet shall be equipped with an approved automatic and manual fire alarm system. All manual and automatic fire alarm systems shall be connected to an approved central receiving station when installed in buildings over 3600 square feet. Buildings and structures containing educational or assisted living uses over 1,000 square feet shall be equipped with an approved manual and automatic fire alarm system that shall be connected to an approved central receiving station. A manual and automatic fire alarm system shall include both automatic and manual fire alarm initiating devices. Note: See Section III of this document for definition of an approved automatic and manual fire alarm system".

- 18. Subsection 907.3, In the first paragraph delete in accordance with Section 907.3.1 through 907.3.1.9 and replace with: "All occupancies over 3600 square feet shall be equipped with an approved automatic and manual fire alarm system. All manual and automatic fire alarm systems shall be connected to an approved central receiving station when installed in buildings over 3600 square feet. Buildings and structures containing educational or assisted living uses over 1,000 square feet shall be equipped with an approved manual and automatic fire alarm system that shall be connected to an approved central receiving station. A manual and automatic fire alarm system shall include both automatic and manual fire alarm initiating devices. Note: See Section III of this document for definition of an approved automatic and manual fire alarm system".

- 19. Chapter 9, Subsection 907.20.6 shall be added and read as follows: Subsection 907.20.6 Fire alarm panels and security alarm panels shall be separate and not combined.

- 20. Chapter 33, Section 3309 shall be added as a new section to read as follows: Section 3309 "This chapter shall be interpreted to be consistent with the provisions of §12-28-101, *et seq.*, C.R.S. and any applicable municipal ordinance or county resolution/ordinance, shall govern all fireworks, their sale, storage and use".

- 21. Chapter 45 is amended by the addition of the following paragraph: "The latest and most current edition of the following codes and standards shall be used. In the event of a conflict between the provisions of these codes or standards and Colorado State Statutes, the most stringent provisions shall apply."

SECTION V: Enforcement Procedures and Appeal.

(a) The Chief shall enforce this code and shall inspect or cause to be inspected all buildings, structures, property, premises, and public places, except the interior of any private dwelling in accordance with the procedures set forth in §32-1-1002(3), C.R.S.. All inspections shall be recorded in an inspection report.

(b) A "Notice of Violation or Hazard" may be issued by the Chief or his designee concerning violations or hazards which are not corrected on-site during an inspection. Said Notice shall be signed by the inspector and contain, as a minimum, the following information:

1. Date of inspection;
2. Name/Address of premises inspected;
3. Name of inspector;
4. Nature of violations, including specific reference to section/subsections of the code;
5. Date of reinspection;
6. Suggested methods of correction or compliance, if applicable;
7. Right to appeal to the Appeals Board;
8. Consequences of failure to correct violation.

(c) An "Order for Immediate Correction of Hazard" may be issued by the Chief:

(1) For failure to correct a violation or hazard within the time specified in a previously issued Notice of Violation or Hazard; or

(2) For violating the code or state statute and said violation renders the building, structure or premises especially liable to fire or is hazardous to the safety of the occupants thereof, or which is so situated as to

endanger other property as set forth in §32-1-1002(3)(c), C.R.S., whether or not a Notice has been previously issued.

(3) An order shall be signed by the Chief and shall contain, as a minimum, the following information:

1. Date of issuance;
2. Name/Address of premises inspected;
3. Nature of violation or hazard;
4. Demand for immediate correction;
5. Right of appeal to the District Court and time limit;
6. Penalties for violation of order;
7. Signature of the Chief or his designee;
8. Acknowledgement of receipt signed by owner, lessee, agent or other responsible person.

(d) An appeal of a Notice of Violation or Hazard may be made to the Appeals Board by delivery to the Chief in writing a notice of appeal within five days of the issuance of the Notice of Violation or Hazard. The appeal shall be heard at the next regular meeting or special meeting called for that purpose. The Appeals Board may affirm, rescind, or modify the Notice and may enter into such enforcement agreements as it deems proper.

(e) An appeal of an Order for Immediate Correction of Hazard may be made to the Appeals Board only if no previous appeal has been made of a previously issued Notice of Violation or Hazard concerning the same violation or hazard. An appeal of an Order must be in writing and filed with the Appeals Board within three days of issuance of the Order.

(f) The Appeals Board shall hear all such appeals and application for relief and render its decision thereon in accordance with its bylaws, rules and regulations.

(g) In the event no appeal is made to the Appeals Board pursuant to this code and resolution or to the court pursuant to §32-1-1002(3), C.R.S. and compliance with the Order and/or correction of the hazard has not occurred, the Appeals Board may, upon recommendation by the Chief or upon its own motion, refer the matter to the Jefferson County District Attorney, or the Douglas County District Attorney depending upon jurisdiction.

(h) An appeal shall suspend the time limits for compliance or correction of a fire hazard or hazards, until the appeal is resolved for appeals of a Notice of Hazard which is issued pursuant to this Section, paragraph (c) (1) herein.

(i) An appeal shall not suspend the time limit for compliance or correction of life safety deficiencies or violations. An appeal of an Order issued pursuant to Section V, Paragraph (c) (2) herein shall not suspend the time limits for

compliance or correction, and compliance or correction shall be made or rendered forthwith, unless the Appeals Board suspends the Order.

SECTION VI: Penalties

(a) Any owner, lessee, agent, or occupant of any building or premises maintaining any condition likely to cause fire or to constitute an additional fire hazard or any condition which impedes or prevents the egress of persons from such building or premises in violation of the provisions of §32-1-1002(3), C.R.S., shall be deemed to be maintaining a fire hazard. Any person who violates any provision of said Section V, subsection (c) is guilty of a misdemeanor. Each day in which such violation occurs shall constitute a separate violation of §32-1-1002(3), C.R.S..

(b) The application of the above penalty shall not be construed to prevent the enforced removal or correction of prohibited conditions or other injunctive relief.

SECTION VII: Repeal of Conflicting Ordinances or Resolutions.

All former ordinances or resolutions enacted by the District or parts thereof conflicting or inconsistent with the provisions of this resolution of the Code or standards hereby adopted are hereby repealed.

SECTION VIII: Validity and Conflict.

The West Metro Fire Protection District Board of Directors hereby declares that should any section, paragraph, sentence or word of this resolution or of the code or standards hereby adopted be declared for any reason to be invalid, it is the intent of the West Metro Fire Protection District Board of Directors that it would have passed all other portions of this resolution independent of elimination here from of any such portion as may be declared invalid. It is further the declaration of the West Metro Fire Protection District Board of Directors that no provision of this resolution or the code or standards adopted herein be interpreted in conflict with existing State law. In the event there is conflict between State law and this code, State law shall take precedent.

SECTION IX: Date of Effect.

This resolution shall take effect and be enforced within incorporated municipalities and unincorporated portions of Jefferson County and Douglas County from and after its approval as set forth in §32-1002(1)(d), C.R.S.

COPY

Adopted this 20th day of FEBRUARY, 2007.

West Metro Fire Protection District

By Leo J. Johnson
LEO J. JOHNSON
BOD CHAIRMAN

ATTEST:

Manny Chavez
Secretary, MANNY CHAVEZ

21

9.5 LEED

9.5.1 LEED Report

April 9, 2009
NOTE: This section has been provided for information only. The requirements of the RFP will govern over this information

A. It is a project requirement of the NREL ESIF project that it becomes certified by the US Green Building Council (USGBC) as LEED Gold, and it is a desirable goal that it be certified as LEED Platinum.

   1. The project has been registered by the Owner's team with the USGBC under LEED NC2.2. It is anticipated that the registration will be transferred to the Design/Builder after award. Should it be deemed advantageous in collection of credits, especially if achieving Platinum rating is more easily facilitated, Design-Builder is encouraged to convert to LEED 2009 rating system.
   2. See the attached LEED-NC Version 2.2 Registered Project Checklist for the points that are applicable to this project.
      a. The goals indicated as "Required" are achievable.
      b. The goals indicated as "Desirable" should be investigated by the Design-Builder and can be achieved as the design and site considerations allow.
      c. For goals indicated as "Owner", the Owner's O&M Program may be responsible for achievement.
      d. For goals listed as "Not Possible", it is the opinion of the Owner that due to project conditions, these points may not achievable. However, it is not the intention of the Owner to restrict the Design-Builder from attempting to achieving these points.

B. The High Performance Computing Center is a unique component of this project. It is recognized that it will be a challenge to achieve significant overall project energy reductions with the large process load of the IT equipment. It is the responsibility of the Design-Builder to properly model the energy reduction achievable through the design of the project, to properly document the energy reductions, and to obtain approval of the methods used from the USGBC. The Owners preliminary investigation indicates the following:
   1. 2004 ASHRAE 90.1 Appendix G will be the governing document for the proper modeling techniques for determining how much the proposed project design exceeds the standard when compared to a base case of just meeting the mandatory requirements of the standard.
   2. The process load of the IT equipment must be carried in the overall building energy use model of both the base case and proposed case. Since this will be a large percentage of the overall building energy use, any energy use reductions in HVAC, Power, Lighting, etc. systems will be diluted by the constant process load.
   3. The HVAC, Power, and Lighting systems serving the IT equipment must be modeled in both the base and the proposed case. The initial buildout process load is 5 MW (5,000 kW) There are opportunities to show significant reductions in energy use between the mandated base case systems and what can be achieved in a proposed design. ASHRAE 90.1 appendix G as well as several Credit Interpretation Requests address this issue.
   4. It is possible to show reductions in the process load, however it requires careful documentation of both the base case and proposed case IT equipment. The selection of the IT equipment is the Owner's responsibility. The Design-Builder may work in collaboration with the Owner to investigate if this is a practical method of showing reduced total building energy use.

5. It is desirable to recover the heat from the HPCC for use not only within the building, but also to export the heat outside of the building envelope, and to other campus buildings. This may take the form of snowmelt for exterior pads or supplementing the campus heating water distribution system. It is not clear if this can be credited to the ESIF project for LEED purposes. It is the Design Builders responsibility to investigate this method, and obtain approval from the USGBC.
6. A portion of the energy used to heat the campus heating water distribution system is provided through a wood chip fired boiler. The Owner has indicated that 80% of the annualized energy input is from wood source. It is the Design-Builder's responsibility to determine how this affects the LEED credits.
7. The Owner has determined that the following Credit Interpretation Requests (CIRs) may be applicable to this issue (listed by date of ruling). The determination as to wheter a specific CIR applies to a specific issue on a specific project is for the subcontractor's LEED AP to determine. The Design/Builder is encouraged to review these on the USGBC website.
   a. 3/23/2007
   b. 8/7/2007
   c. 8/13/2007
   d. 5/27/08
   e. 10/24/2008
   f. 11/11/20008
   g. 1/7/2009
   h. 1/12/2009
   i. 1/14/2009

8. The Owner anticipates that an innovation point will be available for instituting a community outreach and education program in conjunction with this project. The Design-Builder will need to establish 3 additional innovation points to meet the required goal of 4 innovation points. From past experience, it is recommended that "extra" concepts be proposed, as the USGBC may or may not accept all submitted innovation points. The proposal shall include concepts of proposed innovation points, and this will be used as a factor in team selection.

C. Substantiation:
   1. Preliminary Design Stage: LEED Checklist annotated to show specific credits to be achieved with brief description of how they will be achieved.
   2. Design Development and Construction Documents Stages:
      a. LEED Checklist annotated to show specific credits status of design related to specific credits to be achieved.
      b. Comprehensive checklist of certification documentation specified in LEED Reference Guide, annotated to show which forms of documentation have been submitted.
      c. The documentation specified in LEED Reference Guide that is relevant to the degree of completion of the design; at subsequent design stages it will not be necessary to repeat submissions of the same documentation unless the design has changed.
   3. At Completion: LEED Certification, by U.S. Green Buildings Council.
      a. Design-Builder will submit application and pay applicable fees.
      b. Design-Builder will provide all certification documentation and install certification plaque.
      c. Design-Builder will provide Owner a complete duplicate of certification documentation.

9.5.2 LEED Score Card

Note: The LEED scorecard in this section was developed as confirmation that LEED Gold could be achieved given the scope of the facility. The LEED Scorecard is for information only. The Owner expects that the Subcontractor will develop their own LEED Scorecard representative of their own individual design solutions.

LEED-NC

LEED-NC Version 2.2 Registered Project Checklist

Energy Systems Integration Facility, National Renewable Energy Laboratory
Golden, Colorado - 01-30-09

Sustainable Sites — 14 Points

Required	Desirable	Owner	Not Possible			
9	4		1		**Sustainable Sites**	14 Points
X				Prereq 1	**Construction Activity Pollution Prevention**	Required
X				Credit 1	**Site Selection**	1
	X			Credit 2	**Development Density & Community Connectivity**	1
			X	Credit 3	**Brownfield Redevelopment**	1
	X			Credit 4.1	**Alternative Transportation**, Public Transportation Access	1
X				Credit 4.2	**Alternative Transportation**, Bicycle Storage & Changing Rooms	1
X				Credit 4.3	**Alternative Transportation**, Low-Emitting and Fuel-Efficient Vehicles	1
X				Credit 4.4	**Alternative Transportation**, Parking Capacity	1
X				Credit 5.1	**Site Development,** Protect of Restore Habitat	1
X				Credit 5.2	**Site Development,** Maximize Open Space	1
X				Credit 6.1	**Stormwater Design,** Quantity Control	1
	X			Credit 6.2	**Stormwater Design,** Quality Control	1
	X			Credit 7.1	**Heat Island Effect,** Non-Roof	1
X				Credit 7.2	**Heat Island Effect,** Roof	1
X				Credit 8	**Light Pollution Reduction**	1

Water Efficiency — 5 Points

Required	Desirable	Owner	Not Possible			
3	2				**Water Efficiency**	5 Points
X				Credit 1.1	**Water Efficient Landscaping**, Reduce by 50%	1
	X			Credit 1.2	**Water Efficient Landscaping**, No Potable Use or No Irrigation	1
	X			Credit 2	**Innovative Wastewater Technologies**	1
X				Credit 3.1	**Water Use Reduction**, 20% Reduction	1
X				Credit 3.2	**Water Use Reduction**, 30% Reduction	1

Energy & Atmosphere — 17 Points

Required	Desirable	Owner	Not Possible			
8	4	1	4		**Energy & Atmosphere**	17 Points
X				Prereq 1	**Fundamental Commissioning of the Building Energy Systems**	Required
X				Prereq 2	**Minimum Energy Performance**	Required
X				Prereq 3	**Fundamental Refrigerant Management**	Required
				Credit 1	**Optimize Energy Performance**	1 to 10
X				Credit 1.1	**10.5% New Buildings / 3.5% Existing Building Renovations**	
X				Credit 1.2	**14% New Buildings / 7% Existing Building Renovations**	
X				Credit 1.3	**17.5% New Buildings / 10.5% Existing Building Renovations**	
X				Credit 1.4	**21% New Buildings / 14% Existing Building Renovations**	
	X			Credit 1.5	**24.5% New Buildings / 17.5% Existing Building Renovations**	
	X			Credit 1.6	**28% New Buildings / 21% Existing Building Renovations**	
	X			Credit 1.7	**31.5% New Buildings / 24.5% Existing Building Renovations**	
			X	Credit 1.8	**35% New Buildings / 28% Existing Building Renovations**	
			X	Credit 1.9	**38.5% New Buildings / 31.5% Existing Building Renovations**	

			X	Credit 1.10	**42% New Buildings / 35% Existing Building Renovations**
				Credit 2	**On-Site Renewable Energy**
X				Credit 2.1	**2.5% Renewable Energy**
	X			Credit 2.2	**7.5% Renewable Energy**
			X	Credit 2.3	**12.5% Renewable Energy** — 1 to 3
X				Credit 3	**Enhanced Commissioning** — 1
X				Credit 4	**Enhanced Refrigerant Management** — 1
X				Credit 5	**Measurement & Verification** — 1
		X		Credit 6	**Green Power** — 1

continued…

Required	Desirable	Owner	Not Possible		
5	2		6	**Materials & Resources**	**13** Points
		X		Prereq 1	**Storage & Collection of Recyclables** — Required
			X	Credit 1.1	**Building Reuse**, Maintain 75% of Existing Walls, Floors & Roof — 1
			X	Credit 1.2	**Building Reuse**, Maintain 100% of Existing Walls, Floors & Roof — 1
			X	Credit 1.3	**Building Reuse**, Maintain 50% of Interior Non-Structural Elements — 1
X				Credit 2.1	**Construction Waste Management**, Divert 50% from Disposal — 1
X				Credit 2.2	**Construction Waste Management**, Divert 75% from Disposal — 1
			X	Credit 3.1	**Materials Reuse**, 5% — 1
			X	Credit 3.2	**Materials Reuse**,10% — 1
X				Credit 4.1	**Recycled Content**, 10% (post-consumer + ½ pre-consumer) — 1
X				Credit 4.2	**Recycled Content**, 20% (post-consumer + ½ pre-consumer) — 1
X				Credit 5.1	**Regional Materials**, 10% Extracted, Processed & Manufactured Regic — 1
	X			Credit 5.2	**Regional Materials**, 20% Extracted, Processed & Manufactured Regic — 1
	X			Credit 6	**Rapidly Renewable Materials** — 1
			X	Credit 7	**Certified Wood** — 1

Required	Desirable	Owner	Not Possible		
14	1			**Indoor Environmental Quality**	**15** Points
X				Prereq 1	**Minimum IAQ Performance** — Required
		X		Prereq 2	**Environmental Tobacco Smoke** (ETS) **Control** — Required
X				Credit 1	**Outdoor Air Delivery Monitoring** — 1
X				Credit 2	**Increased Ventilation** — 1
X				Credit 3.1	**Construction IAQ Management Plan**, During Construction — 1
X				Credit 3.2	**Construction IAQ Management Plan**, Before Occupancy — 1
X				Credit 4.1	**Low-Emitting Materials**, Adhesives & Sealants — 1
X				Credit 4.2	**Low-Emitting Materials**, Paints & Coatings — 1
X				Credit 4.3	**Low-Emitting Materials**, Carpet Systems — 1
X				Credit 4.4	**Low-Emitting Materials**, Composite Wood & Agrifiber Products — 1
X				Credit 5	**Indoor Chemical & Pollutant Source Control** — 1
X				Credit 6.1	**Controllability of Systems**, Lighting — 1
	X			Credit 6.2	**Controllability of Systems**, Thermal Comfort — 1
X				Credit 7.1	**Thermal Comfort**, Design — 1
X				Credit 7.2	**Thermal Comfort**, Verification — 1
X				Credit 8.1	**Daylight & Views**, Daylight 75% of Spaces — 1
X				Credit 8.2	**Daylight & Views**, Views for 90% of Spaces — 1

Required	Desirable	Owner	Not Possible			
4		1		**Innovation & Design Process**		**5** Points
X				Credit 1.1	**Innovation in Design:** Community education program	1
		X		Credit 1.2	**Innovation in Design**:	1
X				Credit 1.3	**Innovation in Design**:	1
X				Credit 1.4	**Innovation in Design**:	1
X				Credit 2	**LEED® Accredited Professional**	1

Required	Desirable	Owner	Not Possible		
43	13	2	11	**Project Totals** **(pre-certification estimates)**	**69** Points

Certified 26-32 points **Silver** 33-38 points **Gold** 39-51 points **Platinum** 52-69 points

9.6 NREL Quality Assurance Plan

Note: A copy of procedure No. 2-3.1 “Quality Assurance Program”dated 1/10/08 is avaible from the Subcontract Administrator

9.7 NREL Safety Plan

Note: A copy of procedure No. 6-4.12 “Construction Environment, Safety and Health”dated 6/22/07 is avaible from the Subcontract Administrator

9.8 NREL Operations CAD Manual

National Renewable Energy Laboratory

Innovation for Our Energy Future

SITE OPERATIONS COMPUTER AIDED DESIGN MANUAL

REVISION 4
July 2007

NREL SITE OPERATIONS
COMPUTER AIDED DESIGN MANUAL

Table of Contents

THIS PAGE INTENTIONALLY BLANK

INTRODUCTION

Purpose:

The purpose of this Manual is to provide design and engineering personnel with the information required to complete NREL projects using computer technologies.

Scope:

The scope of this document covers standards for drawing production in the life cycle of a typical design project at NREL. Standards compliance is essential to accomplishment of the following goals.

1. Consistent appearance of drawings and documents.
2. Consistent methodology for the creation of drawings and documents regardless of whether created by NREL or by consulting A/E firm.
3. Facilities information is kept current and accurate. The as-built condition is readily available for reference or construction activity.
4. Historical construction information is consistently archived and inaccurate information is removed from access.

Authority:

The information contained in this document shall be considered required.
It is the A/E design contractor's responsibility to insure all of their subcontractors comply with NREL standards.
Any exception to standards compliance must be agreed to in writing by NREL.

Section 01
Section Title: General Information

Drawing files:

All drawing files submitted to NREL are required to be in AutoCAD format. The software revision is to be compatible with that in use by NREL at the time of project start-up. **NREL classifies the electronic file(s) as the master document(s) with the hard copy output a representation of the master document.** Pursuant to this classification an electronic copy is required for any issued drawing regardless of revision. **PDF are NOT an acceptable substitution for electronic CAD files**

Submittals:

Submittals of all pertinent documents, drawings, spreadsheets, specifications, calculation sheets, schedules, and support files for the project shall be in accordance with the project Statement of Work (SOW).

Electronic Media:
Submittal of all relevant electronic documentation for each project issue will be concurrent with the hardcopy distribution for each release. All electronic media (and or) packaging will be labeled with NREL project name, content description, date, and contracting agency name.
Electronic data may be delivered via **Internet, CD-ROM, or E-mail**.
E-mail letter of transmittal will accompany electronic media submittals.

Hard Copy Output:
The A/E design contractor is responsible for providing document reproduction to comply with a project distribution list as determined by NREL in the project statement of work.

Warranty:

The A/E design contractor shall guarantee that all electronic and hard copy files (including submittals by subcontractors) meet the following criteria:
All electronic files submitted are virus free.
All electronic files submitted are compatible with NREL operating systems and software formats.
All support files required for the project package are included with the submittal.
All Media is properly labeled.
Submittal of electronic and hard copy materials shall be concurrent and will have matching revisions.
All hardcopy submittals shall pass second-generation copy test (copy of a copy will be legible and reproducible).

Section 02
Section Title: Drawing Numbers-File Names

Drawing Numbers:

All drawings have a drawing number consisting of a prefix and a suffix. The file name shall match the drawing number. **Only one drawing number per file name is allowed. NREL does not use the AutoCAD sheet set option.** Hyphens are used in both drawing numbers and file names.

Drawing prefixes – The drawing prefix is assigned by NREL and consists of a building or facility identifier and a project sequence number (001 thru 999). The sequence number 000 is used internally by NREL for the master as-built drawing file depicting the current condition of the building. Drawing prefix example: SERF-001-.

Drawing suffixes – The drawing number suffix consists of an alphanumeric 4 to 6 character sequence indicating discipline (alphabetic) discipline sheet number (numeric), and any add in sheets (alphabetic). Drawing suffixes shall be assigned according to the National CAD standard uniform drawing system.

Discipline identifier letters to be used for NREL drawing number & file names

- A Architectural
- C Civil
- D DDC (control systems)
- E Electrical
- F Fire Protection (suppression and alarms)
- G General Arrangements
- H Hazardous Materials (including area classification plans)
- I Interiors (furniture and space planning)
- L Landscape
- M Mechanical (HVAC, piping)
- P Plumbing
- Q Equipment
- S Structural
- T Telecommunications (including data network, & PA systems)
- X Project
- Y Security (including safety)
- Z Other (includes contractor /shop drawings)

Example of typical NREL drawing number and file name: SERF-012-E-101A

Model File Names (external reference names)

Drawings depicting the physical nature of NREL facilities are constructed in model space and consist of a series of discipline model files referenced together to reflect the physical condition. Model file names consist of a building or facility identifier (3 or 4 character depending on facility acronym) followed by a hyphen and a 4 character discipline/floor designator. Basement plans are to be designated "00". Roof plans are to be designated "RP". In the following samples of model names the facility will be SERF.

Examples of model file names for new construction

- SERF-ARP (architectural roof plan)
- ****-AFP01 (architecture 1st floor plan)
- ****-IFP01 (furniture-space planning 1st floor plan)
- ****-ME02 (mechanical equipment 2nd floor)
- ****-HV** (HVAC)
- ****-PL** (plumbing)
- ****-PP** (piping)
- ****-EP00 (electrical power basement)
- ****-EL** (electrical lighting)
- ****-ES** (conduit plans telecom PA systems)
- ****-FS03 (fire suppression 3rd floor)
- ****-FD** (fire detection)

Note: The above model files names are to be used for new construction projects. Files sent by NREL for existing facility modifications are to be used as is. **Existing file names, layer names, colors or symbols are not to be changed.**

Section 03
Section Title: Templates

-

Drawing Templates:

The A/E contractor will be provided with a template file containing the standard NREL parameters for units, line types, limits, page setups, plot styles and other available settings. The template contains the appropriate NREL border with all attribute blocks for title block and revision history. These graphic items reside in PAPER-SPACE on the final drawing tab. Contractors are expected to maintain a consistent ANSI D sheet size for all drawing packages. If stated otherwise in the project statement of work or the project team requires alternate sheet sizes other standard ANSI size templates are available on request. The standard drawing template for NREL projects is described below.

2D2000iARCH-D.DWT

- Landscape oriented 22”x34” ANSI D size
- 3 sheet tabs “Model” – where physical representation of design resides. “Final Drawing” – Layout space where the border, title block and other annotation reside. This tab is where issued drawings are created and plotted. “Add-Alt. 01” this tab is duplicate of the final drawing tab and is intended to allow for Add-Alternate studies for this drawing.
- Precut viewports at 1/8” = 1’-0” and 1/4” = 1’-0”
- Delineated area for drawing notes.

Template Layers (associated with border s)

- Z-BORD-MAIN – all border graphics except cut line
- Z_BORD-TRIM – consists of border cut line only
- Z-BORD-ATTR – all border attribute blocks and inclusive text
- Z_BORD-CLOU – all revision symbols clouds and associated text
- Z-BORD-IMAG – all embedded pictures (i.e. JPG, TIF, BMP)
- Z-BORD-MVUE – viewports
- Z-BORD-TEXT – logos, graphic scales, and text not associated with attribute blocks (examples: general notes, key notes, schedules, revision triangles, etc.)

Section 04
Section Title: Borders Title Blocks & Revision Control

Borders:

NREL borders are based on the ANSI size standard. The 22”x34” ANSI D border is used for all NREL drawings except DDC (instrumentation) loops. The border is included on the standard drawing template and shipped with the support files for all projects. The file name for this border is ZBD2234D-3.DWG

Border Usage:

- Borders for drawings not created using a standard template require the border to be inserted in PAPER SPACE at 0,0. Borders are not to be “X_Refed”.
- Borders shall be inserted on layer Z-BORD-MAIN.
- Only one border per drawing file is allowed. (**Sheet Sets are not to be used**)
- Do not EXPLODE, RENAME, or alter the border in any manner.
- In general physical drawings employ MODEL-SPACE for the physical aspects of the design and PAPER-SPACE for annotation, keynotes and borders. Borders are not to be inserted in MODEL-SPACE.
- In general schematic drawings (including but not limited to one line diagrams, flow diagrams, and schedules) are created exclusively in PAPER-SPACE.

Title Blocks:

NREL borders provided with inserted attribute blocks. The attribute blocks are designed to fill in required text data fields on borders.

- The prompts visible in the DDATTE command inform the user as to the purpose of the text field.
- The format for attribute blocks with date fields shall be MM/DD/YYYY
- Title block required fields: building or site, discipline, drawing title (4 lines available), drawing prefix (assigned by NREL), drawing number, revision, and NREL project number. NREL work order number and A/E project number fields are optional.
- Engineering review required fields: designer/date, engineer/date, checked by/date, A/E approval/date. This block does not change after first issue.
- File Information block used primarily for internal tracking a NREL this block optional for A/E firms
- Revision history required fields: revision number, revisions lines (for description), date (revision issue date), BY-designer, APP’D-engineer, and BAE

Revision Control

The revision control process for new construction and modifications to existing facilities is the same.

- All preliminary design drawings including CDR's, Title I, and Title II up to and including 100% review use letter revisions beginning with the letter "A". Subsequent revisions use the next letter in the alphabet (letters I and O are not used). Drawings may be issued singly. The revision description is "ISSUED FOR REVIEW", with an optional brief description of the revision.
- When final review comments for Title II (detailed design) 100% have been incorporated into the drawing set the entire package will be issued as revision 0. The revision description for the complete drawing package shall read "ISSUED FOR CONSTRUCTION".
- Subsequent revisions to drawings (change orders etc.) during the construction phase of a project shall use the next number in sequence. The description shall read "REVISED ISSUE FOR CONSTRUCTION" with a brief description of the change. Drawings may be issued singly during this phase.
- At the completion of construction redline changes (Title III construction support services) are submitted to the A/E design firm. When these comments are incorporated the entire set is issued at the next available revision number. Revision descriptions for new facility construction will read "RECORD DRAWING". Revision descriptions for facility modification projects will read "PROJECT AS-BUILT". Drawings with no as-built changes shall have "no changes this sheet" added to the description. This indicates a complete review of the design and construction has been completed.
- Revisions begin at the top of the revision area and progress top to bottom left to right. When the revision area becomes filled the newest revision overwrites the oldest.
- Do not add revision triangles or any such adjuncts to the revision section of the title block.

Section 05

Section Title: layers, Line Types, and Weights

Layers:

The layer guidelines for NREL drawing packages are determined by the nature of the project (New Construction or Existing Facility Modification). In all cases design teams are strongly encouraged to economize the number of layers used on a project.

New Construction:

Layer assignments for new construction design projects are to follow AIA CAD LAYER GUIDELINES published by the American Institute of Architects, and included as section one of the NATIONAL CAD STANDARD VERSION 2.0. NREL standards allow flexibility in the use of the AIA format *i.e*. designers my use two to four of the AIA standard fields listed below. Each field is to be followed by a dash.

- Field one (discipline code, required) describes discipline and is one character in length
- Field two (major group, required) describes the major subject group for a discipline and is four characters in length.
- Field three (minor group, optional) describes minor subject group for a discipline and is for characters in length.
- Field four (status required unless noted otherwise) describes the status of a discipline group and is four characters in length. Noted exceptions: Layers used on new construction designs are assumed to be "NEWW". Layers on provided discipline background models for facility modifications are assumed to be "EXST".
- Status field descriptions used on NREL designs are **NEWW** (new work), **EXS**T (existing work), **DEMO** (demolition work), and **FUTR** (future work).

Existing Facility Modifications:

Layer assignments for existing facility modification projects are determined by the discipline background files provided to the design team at the start of the project. Provided layers are to be used as is. The addition of a status description field (see above) is the only allowable modification to existing layers on NREL drawing files.

In the event that a design requires creation of new layers guidelines for new construction projects shall apply. All new layers created will conform to the NATIONAL CAD STANDARD.

Line Types and Weights:

Line types - acceptable line types for NREL designs are found in AutoCAD and NREL line type files (ACAD.LIN & NRELLINE.LIN) included with the NREL drawing templates.

- The line type scale (LTSCALE) value shall be set to one times the drawing scale factor when in model space.
- The line type scale (LTSCALE) shall be set to one (1) in LAYOUT-SPACE.
- The LAYOUTSPACE linetype scale (PSLTSCALE) value shall be set to one.

Line weights – the following standard line weights are contained in the provided NREL.STB. The values shown are in inches, metric equivalent with a text description.

- 0.0000”/0.00mm (X-FINE)
- 0.0051”/0.13mm (FINE)
- 0.0098”/0.25mm (NORMAL)
- 0.0209”/0.53mm (MEDIUM)
- 0.0315”/0.80mm (HEAVY)
- 0.0417”/1.06mm (X-HEAVY)
- 0.0622”/1.58mm (XX-HEAVY)

Section 06

Section Title: Text

Fonts: (parameters)

NREL has standardized the use of four font files and six styles which have universal availability, simplicity, and readability on full size and reduced size drawings. Designers shall use the fonts and parameters described here on all drawings created for NREL. The use of any non-standard font requires pre approval by NREL Site Operations PMEC. The acceptable fonts and their parameters as entered in the STYLE command follow:

- Style Name: ROMANS
  Font file: ROMANS.SHX
  Height: 0.0
  Width: 0.9
  Oblique Angle: 0.0
  Backwards: N
  Upside Down: N
  Vertical: N
  Note: ROMANS-I (italic style limited usage) Oblique Angle 15.0
- Style Name: ROMAND
  Font file: ROMAND.SHX
  Height: 0.0
  Width: 0.8
  Oblique Angle: 0.0
  Backwards: N
  Upside down: N
  Vertical: N
  Note: ROMAND-I (italic style limited usage) Oblique Angle 15.0
- Style Name: BOLD
  Font File: BOLD.SHX
  Height: 0.0
  Width: 1.25
  Oblique Angle: 0.0
  Backwards: N
  Upside Down: N
  Vertical: not applicable

Font Usage: (pertaining to all disciplines)

ROMANS – with a height of 0.1" (3/32") shall be used for all text except as noted below.

ROMAND – with a height of 0.125" (1/8") shall be used for:

- Underlined equipment number and titles
- Room Numbers (when a room number block is not used) and underlined room names.
- General and key note titles.
- Column bubble annotation
- Matchline text

ROMAND – with a height of 0.1875 (3/16") shall be used for:

- Underlined drawing titles (e.g. PLAN, ELEVATION, SECTION, and DETAIL).
- Titles for schedules, bill-of –materials, index, charts, and other tabular data.

BOLD – is used for special case situations where emphasis is required on a drawing. Heights can range from 0.125: (1/8") to 1.0" (1 inch) depending on desired effect.

Specific Requirements: (pertaining to all disciplines)

GENERAL NOTES and KEY NOTES

- Required titles for these note sections are GENERAL NOTES: and KEY NOTES: the text shall be underlined ROMAND font – sized appropriately larger than body of text.
- The body of the text shall be 0.1" (3/32") ROMANS font. The use of MTEXT is highly encouraged for the body of general and key note text.
- A single space shall be used to separate general note numbers from the body of the note text.
- Keynote numbers shall be inserted with the block ZNOTEKEY.DWG (reference section on general symbols).
- Notes shall be in paper space.

TITLES (Plan, Section, Elevation, Detail)

- Plans, sections, elevations, and details shall have a title identifying the subject and other pertinent information (e.g. scale). Titles shall be 0.1875" (3/16") underlined ROMAND text. Scale identifier shall be 0.1" (3/32") ROMAND text.
- Plans are not numbered or lettered. Partial plans are considered details and may be numbered as such (optional). Details are identified by number. Sections and elevations are identified by letter. (I and O are not used.)

Section 07
Section Title: Dimensions

General:

All Dimensions shall reside in model space with the exception of simple details drawn in layout space.
All dimensions shall be on a specific layer created for dimensioning.
Associative dimensioning shall be used.
Dimension styles shall be used. The NREL dimension template (AMS-NREL.dim) is available on request. The A/E contractor shall insure that dimension styles from subcontractors are uniform.

Specific Parameter Requirements:

Dimension text – Dimension text shall be ROMANS font at a plotted height of 0.1" (3/32") on full size drawings. Standard dimension text position shall be centered above the dimension line. Dimension text too long for standard positioning may be placed outside extension lines or on leader lines. NOTE: leader lines shall not cross dimension lines.

Dimension line terminators – Dimension line Terminators shall be arrows. Dimension "tics" or dots are not to be used.

Stacked fractions – Stacked fractions shall not be used.

Section 08
Section Title: Project Cover Sheet, Keyplans, Schedules

Cover Sheet

All project drawing packages shall have a cover sheet consisting of the following items. Cover sheet templates are available on request.

- A splash banner displaying the facility name-acronym and project name. Available in NREL PMEC standard symbol library
- A simplified site plan with the project location indicated in an appropriate manner.
- If applicable, the A/E's performing work on the project may add their company names logos and addresses to the cover sheet.
- A drawing index for the project.

Cover Sheet Title Block - The title block information of covers sheets shall be entered as follows.

- The discipline shall be entered as PROJECT.
- The drawing title line one shall be COVER SHEET, PROJECT LOCATION.
- The drawing title line two shall be AND DRAWING INDEX.
- The drawing title line three shall be SHEET * OF * (for large projects requiring multiple sheets to accommodate the drawing index).
- The discipline identifier letter for cover sheets shall be X (reference section 2).

Note: Simple projects (3 drawings or less) do not require a cover sheet. The drawing index may be replaced by a general note *e.g." This project consists of two sheets: M-01, E-01"*.

Keyplans

A key plan is required for all discipline plan drawings that do not depict an entire floor on a single sheet. Requirements for keyplans are as follows.

- Preferred placement - lower right above title block.
- Size - roughly same as title block.
- Appropriate hatch pattern to indicate area of floor plan covers. <u>Columns, room numbers and interior details are not shown on keyplans.</u>

Schedules

In order to facilitate future maintenance and modification edits by the owner it is strongly recommended that standard schedules (equipment schedules, bills of material, electrical panel schedules) be created in AutoCAD. It is recommended that the A/E contact NREL PMEC for existing schedule blocks. The Guidelines for creating schedules in AutoCAD are as follows.

- Schedules shall be in paper space.
- The exterior border and line separating the schedule title from data entries hall be a 0.032” (1/32”) POLYLINE.
- Title text shall be 0.1875” (3/16”) ROMAND text.
- All other text shall be 0.1” (3/32”) ROMANS text.
- Horizontal and vertical dividing lines are drawn with Line command on 0.25” (1/4”) increments.

Section 09
Section Title: Plotting

NREL has determined that advantages of the "Named Plot Styles" outweigh staying with the old color = line weight method. Since color no longer controls line weight it can be used intuitively to isolate various building systems or to group objects for clarity on screen. Items within a specific building system can all be the same color on screen, but plot with different line weights. Plotting standards for the "named Plot Styles" are stored in files with and extension of STB. NREL.STB is the standard plot file containing all approved line weights for plotting with black and color inks. This STB file is included in the standard drawing template and is shipped with the transmittal files on all projects.

Note: The use of CTB (color = line weight) plotting style does not comply with NREL standards and will not be accepted on "APROVED FOR CONSTRUCTION" (100% final design) or AS-BUILT submittals. CTB plot style drawings may be submitted for other design review submittals (50%, 90%) with prior written approval from NREL PMEC.

EXCEPTION: NREL STM CIVIL SITE PLANS – Are created as CTB files. For these drawings the NREL "site color .ctb " is to be used.

<u>NREL.STB guidelines</u>

- A "Named Plot Style" is assigned BYLAYER to a drawing file's Plot Style Layer property. Do not hardcode a "Named Plot Style" to individual entities within a drawing file
- All drawing entity properties are to be created BYLAYER
- All blocks must be free of hard coded nested entities or they will not plot properly on NREL equipment.
- Selection of "normal" as plot style for any layer in the LAYER PROPERTIES MANAGER dialog box will result in screen color plotting on NREL equipment. Plot Style assignments in NREL.STB contain an ink color prefix and line weight suffix (*e.g. Black Medium = black ink – 0.0209" (0.53mm) line*

Section 10
Section Title: Symbols

.

Bubble Symbols

Column Bubbles- Required attributes for column bubbles are as follows.

- Letters are used to identify major columns running from west to east (left to right) of the building or facility. For new facilities the first column label shall be "A". The letters "I" and "O" shall not be used to identify columns.
- Numbers are used to identify major columns running from north to south (top to bottom) of the building or facility. The uppermost column number label in a new facility shall be "1".
- Minor columns shall have a single decimal number appended to the column number or letter to indicate the approximate distance percentage between major columns (e.g. A.5, 1.9).
- Attribute text for column bubbles shall be 1/8" ROMAND text (plotted height).
- Column bubbles reside on layer GRID-IDEN with a continuous line type in the layer identification.
- Column bubbles are available in NREL PMEC standard symbol library.

Section, Elevation, & Detail Bubbles- Requirements for these bubbles are as follows.

- Sections and elevations are identified by letter. The letters "I" and "o" are not used. If the number of sections for a project exceeds twenty four, then two letters shall be used (e.g., AA, AB, AC etc.).
- Details are identified with numbers beginning with the number "1". Partial plans are considered details and may be numbered as such.
- Bubble cross-indexing criteria:
  when sections, elevations, and details are drawn on different sheets than the parent graphic the following applies
  - On the parent graphic where the section, elevation, or detail is labeled the drawing number reference of the bubble shall be to the sheet where the section, elevation, or detail can be found in the drawing set.
  - On the sheet where the section, elevation, or detail is drawn the drawing number reference of the bubble shall be to the sheet where the parent graphic can be found in the drawing set.
- When a section, elevation, or detail is drawn on the same sheet as the parent graphic the drawing reference in the bubble shall be a dash.
- Bubbles for sections, elevations, and details are available in NREL PMEC standard symbol library.

Graphic scales:

Graphic scales - shall be added to all physical drawings where a scale is called out. Guidelines for graphic scale use are as follows.

- Graphic scales shall be in paper space.
- The preferred location for graphic scales on drawings where only one scale is called out is lower right just above the title block.
- The preferred location for graphic scales on drawing requiring multiple scales is under the title of the appropriate plan, section, or detail.
- The A/E contractor shall insure graphic scale use is uniform through out the design package.
- Commonly used graphic scales for architectural and engineering scales are available in the NREL PMEC standard symbol library.

North Arrow Symbols

North arrows shall be placed on physical drawings that depict a plan view of the building, site, or facility. Guidelines for north arrow usage are as follows.

- North arrows to be used are ZNORTH01.DWG (standard north arrow) and ZNORTH02.DWG (optional attachment for indication of true north). These blocks are available in NREL PMEC standard symbol library>
- North arrows shall be in paper space.
- North arrow preferred placement is the upper left of the plan.
- North arrow orientation shall be toward the top of the page (PLAN NORTH).

Clouds, Revision Triangles, Match Lines, Drawing Status Stamps, Crosshatching

Clouds – All new work depicted on drawings shall be indicated with a revision cloud (and revision triangle where appropriate).

- Revision clouds and triangles shall be in paper space.
- Revision clouds and triangles shall have their own layer Z-BOARD CLOUD)

Match Lines – Match-lines shall be used on plans, sections and elevations where the drawing scale used prevents the entire plan, section, or elevation from appearing on one sheet. Guidelines for match-lines are as follows.

- Match lines shall be in paper space.
- Match-lines shall have a plotted width of 1/32” using a DIVIDE2 line type.
- Match-line text shall be 0.125” (1/8”) ROMAND text.
- Match-line text shall read “FOR CONT. SEE SHEET *-**”, or “NO MATCH SHEET”, or similar wording.

Drawing Status Stamps – Common drawing status stamps “FOR REVIEW”, “PROJECT DRAWING”, “PROJECT AS-BUILT”, and ‘RECORD DRAWING” are available in the NREL PMEC standard symbol library. These stamps are to be inserted in paper space above the title block or revision history block of the border.

Crosshatching – Designers are encouraged to use standard AutoCAD hatch patterns, but custom hatch may be used if the pattern file is forwarded to NREL PMEC. All crosshatching shall be on a separate layer identifying the discipline and the hatch identifier as “PATT” (e.g. ARCH-PATT).

END OF DOCUMENT

9.9 Energy Goals

ESIF Office Space Energy Target Definitions
Updated: 04/06/09
Revision 1
Paul Torcellini, Otto Van Geet, Shanti Pless

25,000 BTU/sqft goal. This goal is intended to serve as a mechanism to create a building (or a distinct section of a building) that uses less than this energy intensity annually within its own footprint. This energy use goal applies to the office space and all office support spaces in the ESIF. The goal is a demand-side goal to be achieved through energy efficiency strategies. Supply-side renewable generation options such as PV, biomass, wind, or renewable energy credits do not count toward the 25,000 BTU/ft^2 goal. In addition, free waste heat recovered from other parts of the ESIF, such as the laboratories or HPC, do not count toward this office space energy goal. The intent is to use the goal as a tool to develop a comprehensive program of efficiency measures and building operational strategies and policies to reduce energy use in the building as the first priority, rather than encouraging the use of supply side renewable options or free waste heat coupled with a less efficient building.

- The energy use intensity of the office space and all office support spaces use will be measured at the building footprint. It includes all loads in the office and support spaces for lighting, HVAC, plug loads, and other miscellaneous equipment, such as elevators, distribution transformers, control systems, and servers. It also includes any façade lighting and outside lighting connected through the building, and the transformer to get to 277/480 (or 120/208, depending on primary voltage).
- Plug loads will be included in the demand side calculation, including a pro-rated contribution for the datacenter. The datacenter energy use for the people in the offices will be included in the 25,000 BTU/ft^2 at 65 W/ESIF occupant. Currently, the data center consumes 65 Watts/employee (continuous), not including the cooling load. This number will be used as part of the plug loads in the office space EUI calculation. Note the datacenter is not the HPC.
- Electrical resistance should not be used for heating. If it is, a multiplier of 2.5 will be applied to equate to a 40% combined cycle natural gas electrical production process.
- Energy that crosses the office space boundary as hot water or hot air will need to be divided by the efficiency of a comparable on-site natural gas boiler, as this system would otherwise be used if district hot water or waste heat recovery was not available. This includes waste heat recovered from other spaces in the building, including the labs and the HPC. The combined combustion efficiency, delivery losses, and pump energy is estimated to be 90%.
- Energy that crosses the boundary as chilled water will be divided by the COP of the central plant, including pumping energy. This COP is estimated to be 3.0.
- Under this definition, PV on the building will be considered a supply side technology, and not count toward the 25,000 BTU/ft^2 goal.
- Daylighting, natural ventilation, transpired collectors, Trombe walls, office space exhaust air recovery, and other such technologies are considered demand side technologies and do count toward the 25,000 BTU/ft2 goal.

The office space site energy use (in Btus) will be determined based on equation 1:

Equation 1:
Office Space Site Energy Use (Btu) =
Whole office space electricity use (including datacenter but not including PV offset) in Btus
+ office space natural gas use in Btu
+ hot water Btus from the district hot water plant *1.11
+ chilled water Btus from the central cooling plant * 0.33

The office space site energy use intensity (Btu/ft^2) is calculated by the site energy use divided by the gross building floor area, as defined by Deru and Torcellini.[1]

[1] Deru, M.; Torcellini, P. (2005). *Standard Definitions of Building Geometry for Energy Evaluation Purposes*. Technical Report NREL/TP-550-38600. Golden, CO: National Renewable Energy Laboratory http://www.nrel.gov/docs/fy06osti/38600.pdf.

ZEB Goal. Once the office spaces have achieved the energy efficiency goal, it is possible to capture renewable energy sources to offset the consumption of these spaces. It is desired to use a Source ZEB building as defined by Torcellini and Pless in "Zero Energy Buildings: A Critical Look at the Definition"[2]. Possible renewable energy generation options include electricity generation from PV on the building, new PV generation at NREL's site and connected to the building's electrical system, solar hot water collectors, and hot water from NREL's wood chip plant. In addition, recovered waste heat from other non-office spaces in the ESIF can also be used in the ZEB goal calculation. See the ZEB hierarchy in "Zero Energy Buildings: A Critical Look at the Definition"[2]. .

This means that a Zero Energy Building would have zero (or less) source energy use, as defined in equation 2:

Equation 2:

Net Source Use (Btus) =
Office space electricity use (not including PV) * 2.894
– PV generation connected to the building * 2.894
+ office space gas use (including waste heat recovery savings)* 1.116
+ hot water Btus from the of wood chip and natural gas plant* 0.47
– solar hot water generation Btus that offsets gas or hot water use * 1.116
+ chilled water entering the building from the central chiller * 0.33 * 2.894

Notes:

- All energy units measured or determined in Btus.
- Woodchips are not a fully renewable resource because of the fossil fuels required to transport the woodchips to the NREL site and the electrical pumping requirements. We have calculated 3% of the delivered wood chip hot water energy is needed for transportation. See Appendix B for the calculation of non-renewable energy use for transportation and delivery uses of wood chips to NREL.
- The hot water source multiplier is based on the designed ratio of wood chip fired vs. natural gas fired district hot water. It is expected the wood chip plant will operate for 80% of the time at a 3% site to source multiplier, and the natural gas fired plant will operate at 20% of the time, with a 50% delivered efficiency and a 1.116 site to source multiplier. The resulting weighted average site to source hot water multiplier is 0.47. (Weighted average = 80% * .03 + 20% * 2 * 1.116). Note that if an updated calculation of the natural gas district heating delivered efficiency is provided, we can use this efficiency to replace the 50% efficiency number we currently have.
- PV generated on the building is valued slightly higher (5%) than PV energy generated on the site due to no transmission, distribution, or transformer losses.
- Electricity site to source multiplier of 2.894 and natural gas site to source multiplier of 1.116 based on Deru and Torcellini[3].
- If cogeneration is used within the building footprint, electricity cannot be exported at the time of co-generation.

---

[2] Torcellini, P., Pless, S., Deru, M. Crawley, D.; (2006). Zero *Energy Buildings: A Critical Look at the Definition.* Paper #417, Proceedings (CD-ROM), ACEEE Summer Study on Energy Efficiency in Buildings, August 13−18, 2006, Pacific Grove, CA. National Renewable Energy Laboratory, Golden, CO. 12 pp. http://www.nrel.gov/docs/fy06osti/39833.pdf (PDF 477 KB).

[3] Deru, M.; Torcellini, P. (2006). *Source Energy and Emission Factors for Energy Use in Buildings*. Technical Report NREL/TP-550-38617. Golden, CO: National Renewable Energy Lab. http://www.nrel.gov/docs/fy06osti/38617.pdf.

- Our experience shows us that we probably will have to reduce the demand side loads below 25,000 BTU/sqft before adding supply side renewable generation capacity.

Appendix A: Calculation of Wood Chip Transportation Energy Use

Conversion for RSF hot water use to wood chips source energy use (transportation energy use)

Assumptions:

1. a 50% delivered efficiency wood chip boiler
2. a mix of green and air dried aspen and pine (see densities and heat contents for cord wood below), 2500 lbs/cord and 12,000,000 btus/cord assumed
3. assumed densities and heat content of wood chips similar to cord wood
4. 128,500 btu/gal of diesel used for transportation in a combination truck
5. 95.2 tons*mile for a gallon of diesel (From LCI database)
6. 50 miles one way from wood chip collection to NREL point of use

For 1,000,000 Btus of heat delivered to the RSF,
1,000,00,/50% = 2,000,000 btus of wood chips needed,
(2,000,000 btus of wood chips) * (128 ft^3/12,000,000 btu) = 21.3 ft^3 of wood chips needed,
21.3 ft^3 of wood chips * 2,500 lbs/ 128 ft^3 = 416 lbs of wood chips (.208 tons),
0.208 tons * 100 miles/ (95.2 tons*miles/gallon diesel) = 0.218 gallons of diesel,
0.218 gal diesel * 128,500 btu/gal = 28,120 btu of diesel needed for 1,000,000 btus of hot water delivered to the RSF,

We have not included energy to actually chip the wood, or move the chips to the point of chipping assuming that this energy would be expended to remove the chips anyhow.

So, for every unit of hot water delivered from wood chips, 3% of that energy was needed for transportation.

Woods	Mass lb/cord [a] (kg/m^3)		Million Btu/Cord [a] (kWh/m^3)	
Species	Green[c]	Air-Dry[b]	Green[c]	Air-Dry[b]
Ash	3840 (480)	3440 (430)	16.5 (1300)	20.0 (1600)
Aspen	3440 (430)	2160 (270)	10.3 (800)	12.5 (1000)
Beech, American	4320 (540)	3760 (470)	17.3 (1400)	21.8 (1800)
Birch, yellow	4500 (560)	3680 (460)	17.3 (1400)	21.3 (1700)
Douglas fir	3200 (400)	2400 (300)	13.0 (1100)	18.0 (1500)
Elm, American	4320 (540)	2900 (360)	14.3 (1200)	17.2 (1400)
Hickory, shagbark	5040 (630)	4240 (530)	20.7 (1700)	24.6 (2000)
Maple, red	4000 (500)	3200 (400)	15.0 (1200)	18.6 (1500)
Maple, sugar	4480 (560)	3680 (460)	18.4 (1500)	21.3 (1700)
Oak, red	5120 (640)	3680 (460)	17.9 (1400)	21.3 (1700)
Oak, white	5040 (630)	3920 (490)	19.2 (1600)	22.7 (1800)
Pine, eastern white	2880 (360)	2080 (260)	12.1 (1000)	13.3 (1100)
Pine, eastern yellow	4000 (500)	2600 (330)	14.2 (1100)	20.5 (1700)

[a] Based on 80 ft^3 of solid wood stacked in a 128 ft^3 cord, for a void fraction of 37.5%.
[b] 20% moisture.
[c] 40% to 60% moisture.

**Cubic meters apply to the gross volume of a stacked pile of wood with a void fraction of 37.5%.

Source: Standard 105P: Standard Methods of Measuring, Expressing, and Comparing Building Energy Performance

Variations in the Energy Use Intensity Based on Occupant Density

The original office space energy use goal of 25,000 BTU/ft^2 annually was based on an assumption of 225 people in 40,000 ft^2 of office space and office support space. A more efficient space planning design could fit more people in a smaller space. If the number of people increases for the office space with a fixed footprint, or if the office space is smaller with a fixed number of

occupants, the EUI can also be increased. The table below shows the allowed EUI's for variations in office space size and occupancy. This in essence maintains a constant energy impact of each employee in the building as the original goal.

Table 1 Total EUI Based on Number of People and Floor Area (kBtu/ft²)

	Number of People																
Floor Area (ft²)	185	190	195	200	205	210	215	220	225	230	235	240	245	250	255	260	265
33,000	24.9	25.6	26.3	26.9	27.6	28.3	29.0	29.6	30.3	31.0	31.6	32.3	33.0	33.7	34.3	35.0	35.7
34,000	24.2	24.8	25.5	26.1	26.8	27.5	28.1	28.8	29.4	30.1	30.7	31.4	32.0	32.7	33.3	34.0	34.6
35,000	23.5	24.1	24.8	25.4	26.0	26.7	27.3	27.9	28.6	29.2	29.8	30.5	31.1	31.7	32.4	33.0	33.7
36,000	22.8	23.5	24.1	24.7	25.3	25.9	26.5	27.2	27.8	28.4	29.0	29.6	30.2	30.9	31.5	32.1	32.7
37,000	22.2	22.8	23.4	24.0	24.6	25.2	25.8	26.4	27.0	27.6	28.2	28.8	29.4	30.0	30.6	31.2	31.8
38,000	21.6	22.2	22.8	23.4	24.0	24.6	25.1	25.7	26.3	26.9	27.5	28.1	28.7	29.2	29.8	30.4	31.0
39,000	21.1	21.7	22.2	22.8	23.4	23.9	24.5	25.1	25.6	26.2	26.8	27.4	27.9	28.5	29.1	29.6	30.2
40,000	20.6	21.1	21.7	22.2	22.8	23.3	23.9	24.4	**25.0**	25.6	26.1	26.7	27.2	27.8	28.3	28.9	29.4
41,000	20.1	20.6	21.1	21.7	22.2	22.8	23.3	23.8	24.4	24.9	25.5	26.0	26.6	27.1	27.6	28.2	28.7
42,000	19.6	20.1	20.6	21.2	21.7	22.2	22.8	23.3	23.8	24.3	24.9	25.4	25.9	26.5	27.0	27.5	28.0
43,000	19.1	19.6	20.2	20.7	21.2	21.7	22.2	22.7	23.3	23.8	24.3	24.8	25.3	25.8	26.4	26.9	27.4
44,000	18.7	19.2	19.7	20.2	20.7	21.2	21.7	22.2	22.7	23.2	23.7	24.2	24.7	25.3	25.8	26.3	26.8
45,000	18.3	18.8	19.3	19.8	20.2	20.7	21.2	21.7	22.2	22.7	23.2	23.7	24.2	24.7	25.2	25.7	26.2
46,000	17.9	18.4	18.8	19.3	19.8	20.3	20.8	21.3	21.7	22.2	22.7	23.2	23.7	24.2	24.6	25.1	25.6
47,000	17.5	18.0	18.4	18.9	19.4	19.9	20.3	20.8	21.3	21.7	22.2	22.7	23.2	23.6	24.1	24.6	25.1
48,000	17.1	17.6	18.1	18.5	19.0	19.4	19.9	20.4	20.8	21.3	21.8	22.2	22.7	23.1	23.6	24.1	24.5

Guidance on User Supplied Plug Loads Usage at the ESIF

26 June 2006 by Paul Torcellini, Shanti Pless, Chad Lobato, Otto Van Geet

The intent is to provide full service needs for the occupants of the ESIF while minimizing the energy loads, in particular the plug loads. The key for success in meeting the energy use targets will be getting loads turned off when offices are not occupied, especially during nights and weekends. Good building design strategies combined with good occupant operations will be needed to minimize unoccupied plug loads. We are striving for best practices and to encourage staff to begin purchasing appropriate equipment now in anticipation of reduced plug loads in the building.

The following tables show the peak hourly plug load assumptions to be used in the ESIF energy use intensity calculations. In order to arrive at these values, a survey of cubicles, offices, break rooms and copy rooms currently being used at NREL was conducted to determine the current plug loads. The plug loads were then adjusted to represent an assumed level of energy efficient equipment and operation. However, the estimated values may not be the optimal values. The values may be adjusted with the implementation of various design strategies to further increase the energy efficiency of the building.

While these tables show the expected hourly plug load uses during occupied hours, we have not provided expected hourly plug loads during unoccupied hours, as we believe the design teams can play a key role in reducing unoccupied plug loads. As such, we have not provided plug load schedules, and would like to see design strategies that address unoccupied plug loads. In addition, if the design teams can provide strategies to reduce the occupied plug loads below what is detailed below in these tables, we encourage them to do so.

Plug loads included in this analysis:

- Personal computers (desktop and laptop)
- Personal printers
- Common office equipment (printer, copier and fax machine)
- Personal task lighting
- Personal phones
- Common break room plug in equipment (refrigerator, coffee pot, microwave, vending machine and drinking fountain)
- Power of the Data Center per person
- Personal miscellaneous loads (cell phone chargers, radios, space heaters, personal fans, etc.)
- The analysis includes a diversity factor that accounts for the percentage of employees that are at work and using the plug loads

Process loads not included in this analysis, but to be included in the calculation of the ESIF energy use intensity goal :

- Step-down distribution transformers for 120 volt loads
- Elevators

- Miscellaneous HVAC equipment (actuators, low voltage transformers, EMS, sensors)
- Miscellaneous loads (security cameras, smoke detectors, security card readers, occupancy sensors, lighting controls, thermostats, telephones, door locks, etc.)
- Telecom Rooms

Plug Loads Assumptions to be used for calculation of the ESIF Energy goals: (Note these assumptions can be adjusted to account for better design with sufficient justification).

- Printers and copiers should be at their peak power levels for shorter periods of time

Percent of Time during Occupied Hours at Peak Power to Achieve Reduced Consumption Goal	
Device	Assumed Percentage
Printer	10
Copier	10

Design strategies to centralize functionality and staged print queues could be used to further reduce printer and copier loads to manage printers that are sleeping or off.

- The percent of time during occupied hours that task lighting is used

Percent of Time during Occupied Hours Task Lighting is Used to Achieve Reduced Consumption Goal	
	Assumed Percentage
Task Lighting	50

Increased daylighting could reduce the amount that task lighting.

- The number of people that use a single common printer, common copier and common fax machine and additional use of multiple function document processing. (We also predict that the common fax machine is going to be a thing of the past on an office level scale.)

Number of People Per Common Device to Achieve Reduced Consumption Goal	
Device	Assumed Number
Printer	20
Copier	20

Building design strategies may allow for an increased number of people per common device.

- The number of people that use a single break room, vending machine and drinking fountain

Number of People Per Common Device to Achieve Reduced Consumption Goal	
Device	Assumed Number
Break Room (includes refrigerator, coffee pot, and microwave)	25
Vending Machine	120
Drinking Fountain	120

Building design strategies may allow for an increased number of people per common device.

- Percentage of people that use laptop computers

Laptop Percentages to Achieve Reduced Consumption Goal	
Person Type	Assumed Percentage
Lab Directors	100
Executive Managers	100
Center/Office Directors	75
Senior Staff	75
Staff	50
Student/Temp	25
Staff in Other Buildings	50

Strategies to increase the use of more efficient computers could be used to further reduce computer energy use. Laptops also minimize the individual UPS systems which are very inefficient.

- Percentage of people that have individual printers

Individual Printer Percentages to Achieve Reduced Consumption Goal	
Person Type	Assumed Percentage
Lab Directors	100
Executive Managers	100
Center/Office Directors	75
Senior Staff	10
Staff	10
Student/Temp	0
Staff in Other Buildings	10

Building design strategies may allow for an increased number of people per common device and a reduced need for individual printers.

- The percentage of people that turn off their computers and office equipment

Assumed Off Percentages to Achieve Reduced Consumption Goal	
Person Type	Assumed Percentage
Lab Directors	85
Executive Managers	85
Center/Office Directors	85
Senior Staff	85
Staff	85
Student/Temp	85
Staff in Other Buildings	85

Building design strategies may allow for an increase in the percentage of equipment that is turned off during non-business hours.

- Data Center (in the RSF, but energy load applied to ESIF occupants)

Data Center Load per Person Assumed to Achieve Reduced Consumption Goal	
	Assumed Load (W/Person)
Data Center	65

.

- Miscellaneous cubicle plug loads

Misc Load Density Assumed to Achieve Reduced Consumption Goal	
	Assumed Load (W/ft^2)
Misc Load	0.05

Building design strategies and increased equipment energy efficiencies may allow for a decrease in the miscellaneous cubicle plug loads.

- Equipment plug loads during an hour of typical occupancy

Equipment Power (W)				
Device	Peak	Standby/Idle	Off	Average Hourly
Printer	910	40	0	127
Copier	1230	100	10	213
Fax Machine	0*	0*	0*	0*
Task Lighting	35	0	0	17.5
Refrigerator	48	48	N/A	48
Coffee Pot	900	50	0	135
Microwave	1300	3	0	133
Vending Machine	152	152	N/A	152
Drinking Fountain	0**	0**	0**	0**
Desktop Computers with Monitor	180	4	2	120
Laptop Computers	100	2	0.5	24
VOIP Phone	4	4	N/A	4

* Fax machines could be eliminated in the new building
** The coolers could be removed from the drinking fountains to eliminate their power consumption
*** Assume each occupant has a phone, as well as each conference room and laboratory. 4W/phone only includes the energy use at the phone- it does not include the backend energy use at the telecom/switch room

Each of these loads was measured to determine the average power use over a typical hour of use, peak power when in full use, and standby power when not in use. The peak loads could be further reduced with design strategies and sufficient documentation. In addition, design strategies to reduce the total number of each of these devices could be investigated to further reduce these plug loads during occupied hours.

Background on Energy Goal

We choose the 25 kBtu/ft^2/yr energy use intensity goal for the office space in the ESIF to be in line with the desire to have one of the most energy efficient office buildings in the country. The figure below shows various LEED buildings and their actual energy use intensity. Our goal is to be one of the best, and a site energy use of 25 kBtu/ft^2/yr would meet this goal.

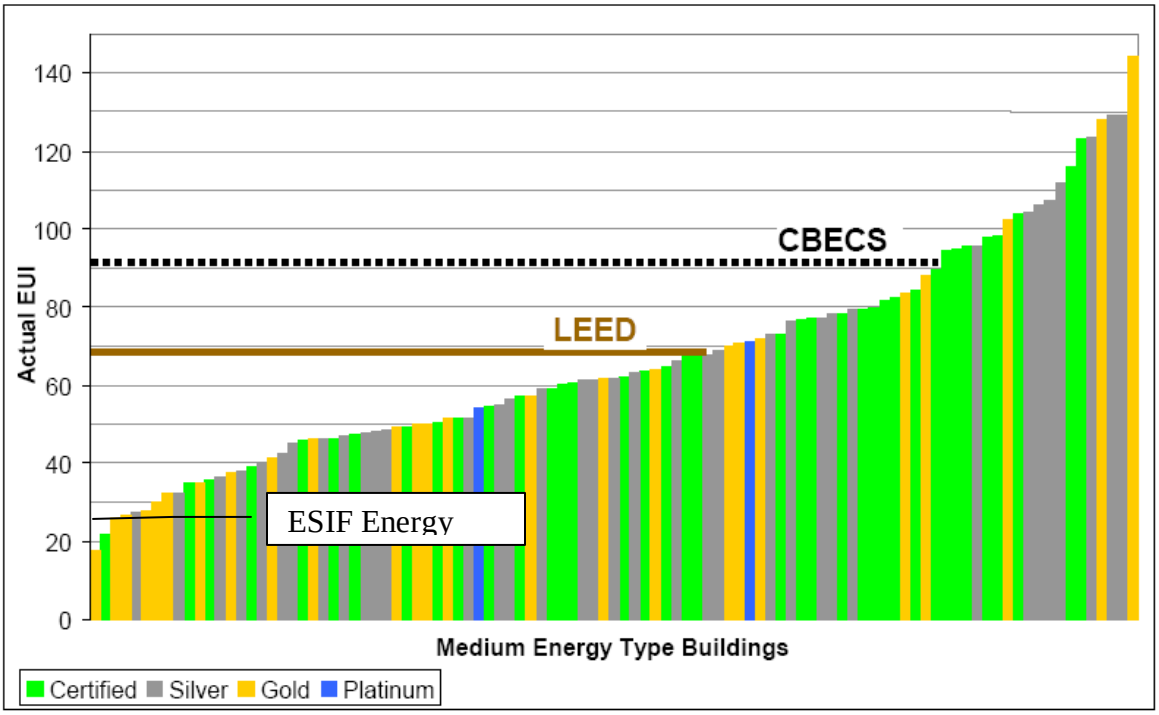

Source: New Building Institute

Another driving factor is based on some of our research and analysis on the commercial building sector. From this analysis, we have developed energy models for the sector for office buildings from the Commercial Building Energy Consumption Survey which are minimally energy code compliant (ASHRAE 90.1-2004). The results of this analysis are available at: http://www.eere.energy.gov/buildings/highperformance/pdfs/energy_use_intensity_targets.pdf

The 25 kBtu/ft^2/yr goal is in line with a 50% savings below our modeled baseline office buildings in Climate zone 5B and represents the maximum energy points for the LEED™ Platinum rating.

Site Vs. Source Energy Use

A site energy use intensity goal was developed for the following reasons (see the Target Definitions document for calculation requirements):

1. We can directly measure the site energy use, and do not need estimated site to source multipliers to calculate source energy use.

2. NREL currently purchases all wind power, and we do not want to claim success just by purchasing renewable energy credits. In addition, the site to source multiplier is unclear for purchased wind power.
3. Some of the disadvantages to using a site energy use goal include the possible encouragement of using electricity for space heating (electric space heating is very efficient at the site, but not at the source, nor very cost effective). We have accounted for this disadvantage in the Target Definitions document by not allowing for all-electric space heating.

9.10 Furnature Systems

Customer: NREL
Project Name: Denver West Bldg 52
Project Number: 9569
Quote/Order: 440042

OfficeScapes
WORKPLACES THAT WORK

NREL National Renewable Energy Laboratory
Innovation for Our Energy Future

Denver West Building 52

Due to color reproduction process the furniture, fabric and finish images in this document are representational only and do not reflect true color, tone or texture of the actual samples. All product will be ordered to match existing as close as possible. All finishes and furniture layout noted in this summary have been reviewed and accepted by all involved persons.

Approved by: Date:

FURNITURE SUMMARY

Customer: NREL
Project Name: Denver West Bldg 52
Project Number: 9569
Quote/Order: 440042

WS-36

OfficeScapes
WORKPLACES THAT WORK

SYSTEMS | ANSWER

NOTES:

- All power located at base of panel with 2 receptacles per workstation and 1 data location along spine wall
- All 42"h panels are Pianista/Sand and all 54"h panels are Ringlet/Basalt
- Shelves are double stacked
- Mobile Box/File Pedestal with cushion top included with workstation. Includes pencil tray

PAINT Platinum | **LAMINATE** Milk | **EDGE** Slate | **TASKLIGHT** Polished Aluminum | **PANEL FABRIC** Pianista/Sand

PANEL FABRIC Ringlet/Basalt

FURNITURE SUMMARY

INITIAL

Customer: NREL
Project Name: Denver West Bldg 52
Project Number: 9569
Quote/Order: 440042

WS-72

OfficeScapes
WORKPLACES THAT WORK

SYSTEMS | ANSWER

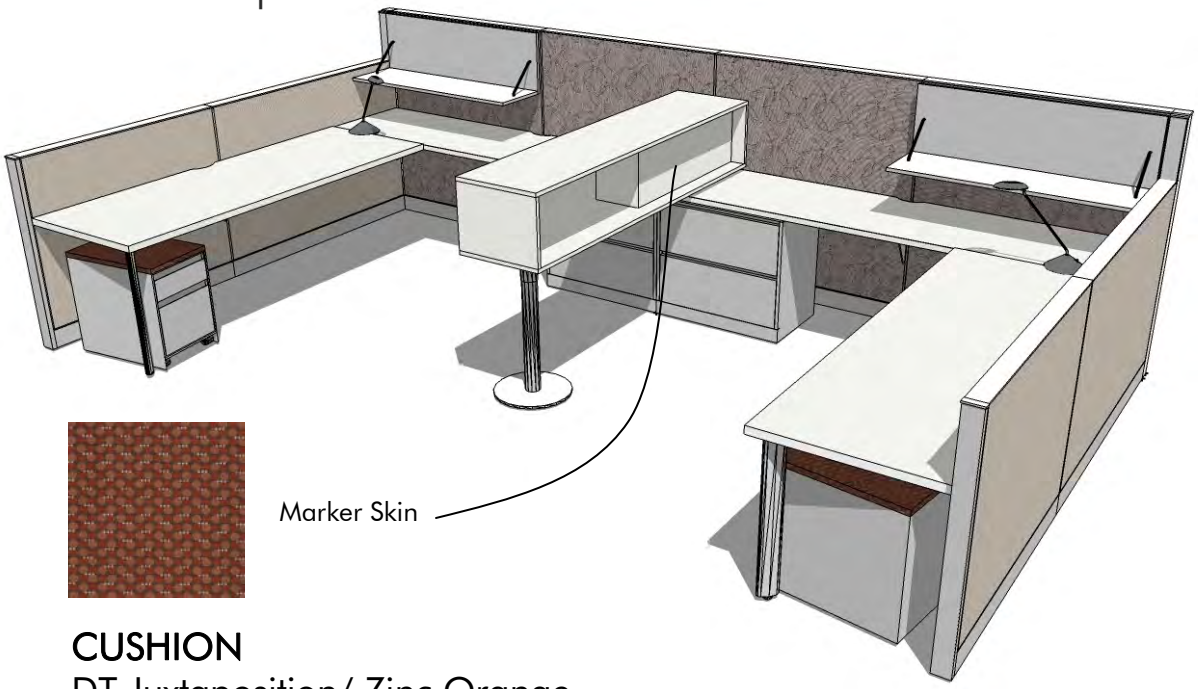

NOTES:

- All power located at base of panel with 2 receptacles per workstation and 1 data location along spine wall
- All 42"h panels are Pianista/Sand and all 54"h panels are Ringlet/Basalt
- 12"h x 36"w Marker Skin included in workstation to be mounted on Duo Storage
- Mobile Box/File Pedestal with cushion top included with workstation. Includes pencil tray

CUSHION
DT Juxtaposition/ Zinc Orange

PAINT
Platinum

LAMINATE
Milk

EDGE
Slate

TASKLIGHT
Polished Aluminum

PANEL FABRIC
Pianista/Sand

PANEL FABRIC
Ringlet/Basalt

FURNITURE SUMMARY

INITIAL

Customer: NREL
Project Name: Denver West Bldg 52
Project Number: 9569
Quote/Order: 440042

WS-72 ADMIN

OfficeScapes
WORKPLACES THAT WORK

SYSTEMS | ANSWER

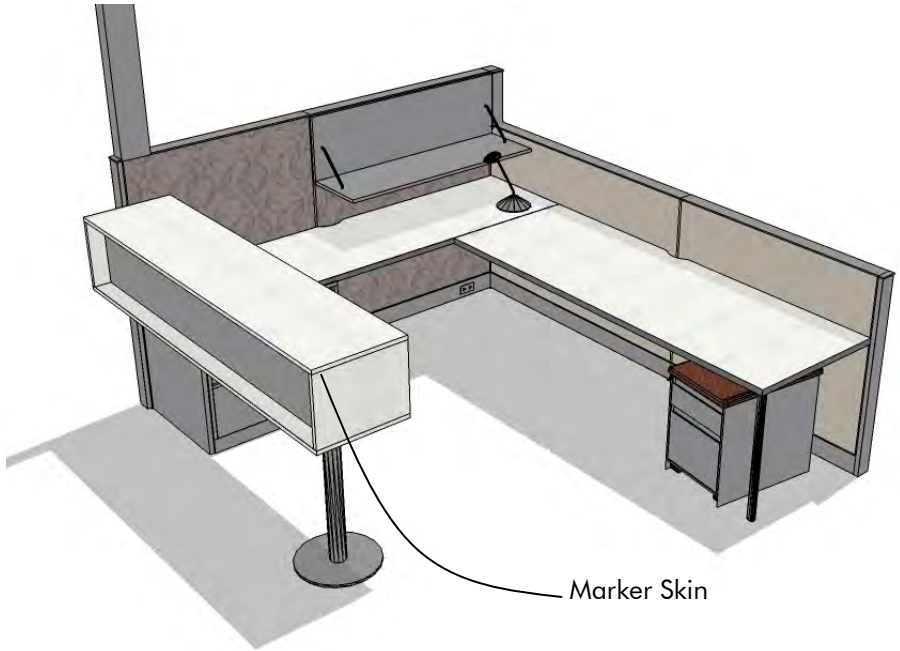

NOTES:

- All power located at base of panel with 2 receptacles per workstation and 1 data location along spine wall
- All 42"h panels are Pianista/Sand and all 54"h panels are Ringlet/Basalt
- Mobile Box/File Pedestal with cushion top included with workstation. Includes pencil tray
- Duo Storage will be for individual, not shared as other workstations. No markerboard skin

CUSHION
DT Juxtaposition/ Zinc Orange

PAINT
Platinum

LAMINATE
Milk

EDGE
Slate

TASKLIGHT
Polished Aluminum

PANEL FABRIC
Pianista/Sand

PANEL FABRIC
Ringlet/Basalt

FURNITURE SUMMARY

INITIAL

Customer: NREL
Project Name: Denver West Bldg 52
Project Number: 9569
Quote/Order: 440042

WS-120

OfficeScapes
WORKPLACES THAT WORK

SYSTEMS | ANSWER

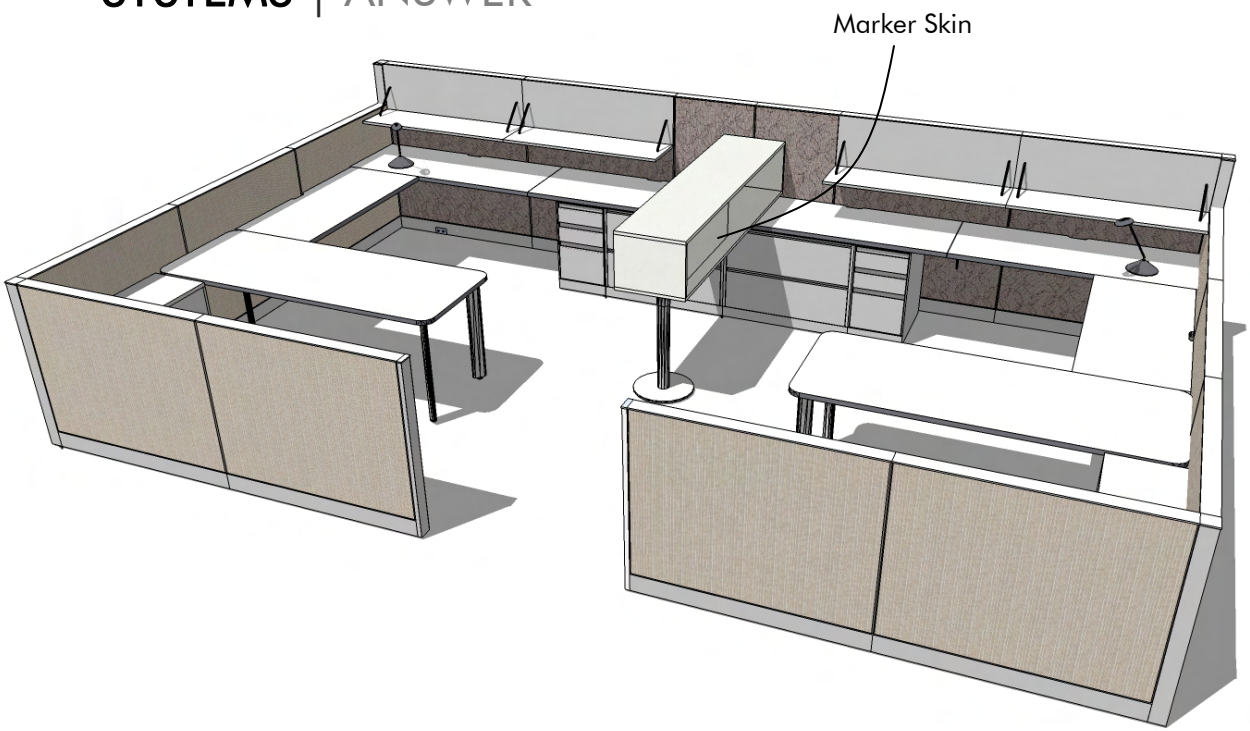

NOTES:

- All power located at base of panel with 2 receptacles per workstation and 1 data location along spine wall
- All 42"h panels are Pianista/Sand and all 54"h panels are Ringlet/Basalt
- 12"h x 36"w Marker Skin included in workstation to be mounted on Duo Storage
- 2 Side Chairs included in workstation (separate page for details)
- Pedestal to come with pencil tray.
- Bookcase to have Laminate top to match Worksurfaces

PAINT
Platinum

LAMINATE
Milk

EDGE
Slate

TASKLIGHT
Polished Aluminum

PANEL FABRIC
Pianista/Sand

PANEL FABRIC
Ringlet/Basalt

FURNITURE SUMMARY

INITIAL

Customer: NREL
Project Name: Denver West Bldg 52
Project Number: 9569
Quote/Order: 440042

PO-120

OfficeScapes
WORKPLACES THAT WORK

SYSTEMS | ANSWER

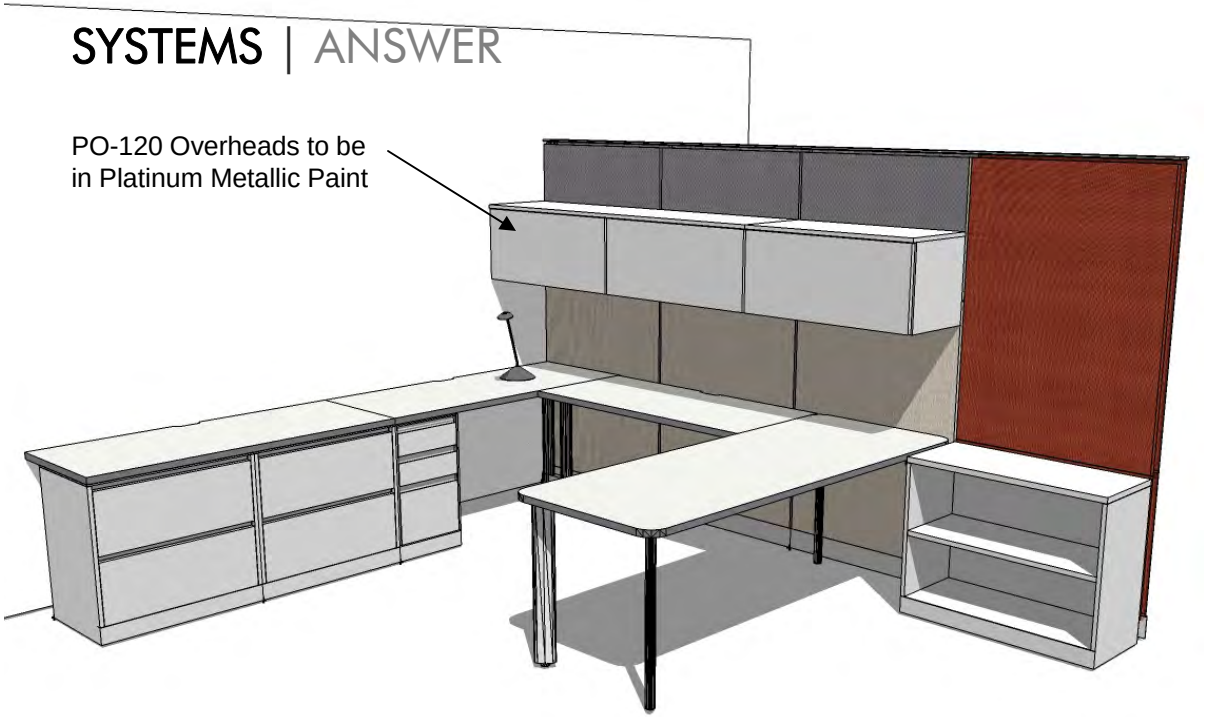

NOTES:

- All power located at base of panel with 2 receptacles per workstation and 1 data location along spine wall
- Overheads mounted approximately 22.75" above worksurface. To be Painted in Platinum.
- See elevations on plans for detailed information regarding panel segmentations and fabric locations
- 36"h x 72"w integrated marker skin included with each workstation
- 2 Side Chairs included in workstation (separate page for details)
- Pedestal to come with pencil tray
- Bookcase to have laminate top to match worksurfaces

PAINT
Platinum

LAMINATE
Milk

EDGE
Slate

TASKLIGHT
Polished Aluminum

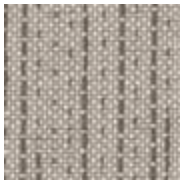

PANEL FABRIC
Pianista/ Wheat

PANEL FABRIC
Canvas/ French Grey

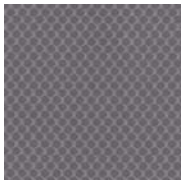

PANEL ACCENT FABRIC
Bubble Wrap/ Iron Reverse

PANEL ACCENT FABRIC
Rivergrass Pimento

FURNITURE SUMMARY

INITIAL

Customer: NREL
Project Name: Denver West Bldg 52
Project Number: 9569
Quote/Order: 440042

PO-240

OfficeScapes
WORKPLACES THAT WORK

SYSTEMS | ANSWER

NOTES:

- 48"h x 36"w wall hung Edge Marker Board
- 2 Side Chairs included in private office (separate page for details)
- 4 Jersey Task chairs included around meeting table that are the same as conference chairs. (see separate page for details)
- All worksurfaces to be veneer. Storage to have wood fronts and Wood tops where possible

WOOD
Blonde on Maple

PAINT
Platinum

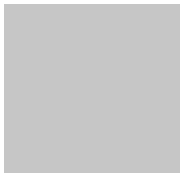

TASKLIGHT
Polished Aluminum

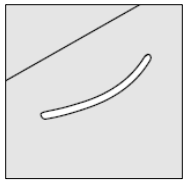

PULL
Contemporary Nickel

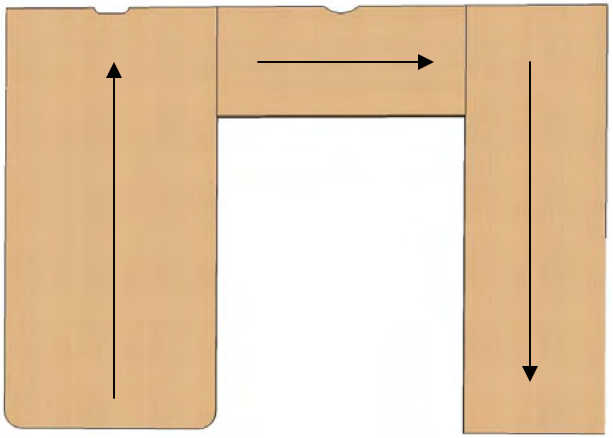

GRAIN DIRECTION

FURNITURE SUMMARY

INITIAL

Customer: NREL
Project Name: Denver West Bldg 52
Project Number: 9569
Quote/Order: 440042

SEATING

All WS-120's, PO-120's and PO-240's

STEELCASE JERSEY CHAIR

Side Chair

Image not Available

FRAME
Platinum

MESH BACK
Grey

SEAT
DT Omar/ Carmine

STEELCASE JERSEY CHAIR

Conference & Huddle Chair

Image not Available

FRAME
Platinum

MESH BACK
Grey

SEAT
DT Juxtaposition/ Zinc Orange

FURNITURE SUMMARY

INITIAL

Customer: NREL
Project Name: Denver West Bldg 52
Project Number: 9569
Quote/Order: 440042

BREAK ROOM

OfficeScapes
WORKPLACES THAT WORK

TURNSTONE TABLE

Break Room Table 54" Round
with Square Leg Base

BASE
Platinum

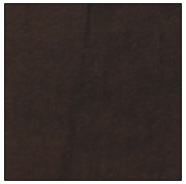

LAMINATE
Chocolate
Walnut

FIXTURES FETCH CHAIR

Break Room Seating

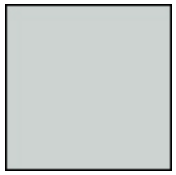

SHELL
Elephant

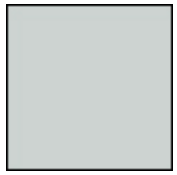

FRAME
Bright Chrome

FURNITURE SUMMARY

INITIAL

Customer: NREL
Project Name: Denver West Bldg 52
Project Number: 9569
Quote/Order: 440042

HUDDLE ROOM

OfficeScapes
WORKPLACES THAT WORK

TURNSTONE CURRENCY

Conference Table

36x72 with Square Legs

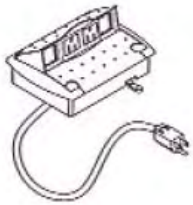

POWER MODULE
To be in Silver

TURNSTONE GROUPWORKS

Telephone-Media Table

EDGE
Slate

LAMINATE
Milk

LEGS
Platinum

EDGE
Slate

LAMINATE
Milk

BASE
Black

FURNITURE SUMMARY

INITIAL