September 1999 • NREL/CP-500-27067

Conference Paper

Small Wind Turbine Testing and Applications Development

D. Corbus, I. Baring-Gould, S. Drouilhet,
V. Gervorgian, T. Jimenez, C. Newcomb,
L. Flowers
National Wind Technology Center
National Renewable Energy Laboratory

Windpower '99
Burlington, Vermont
June 20–23, 1999

National Renewable Energy Laboratory

1617 Cole Boulevard
Golden, Colorado 80401-3393

NREL is a U.S. Department of Energy Laboratory
Operated by Midwest Research Institute • Battelle • Bechtel

Contract No. DE-AC36-98-GO10337

NOTICE

This report was prepared as an account of work sponsored by an agency of the United States government. Neither the United States government nor any agency thereof, nor any of their employees, makes any warranty, express or implied, or assumes any legal liability or responsibility for the accuracy, completeness, or usefulness of any information, apparatus, product, or process disclosed, or represents that its use would not infringe privately owned rights. Reference herein to any specific commercial product, process, or service by trade name, trademark, manufacturer, or otherwise does not necessarily constitute or imply its endorsement, recommendation, or favoring by the United States government or any agency thereof. The views and opinions of authors expressed herein do not necessarily state or reflect those of the United States government or any agency thereof.

Available to DOE and DOE contractors from:
Office of Scientific and Technical Information (OSTI)
P.O. Box 62
Oak Ridge, TN 37831
Prices available by calling 423-576-8401

Available to the public from:
National Technical Information Service (NTIS)
U.S. Department of Commerce
5285 Port Royal Road
Springfield, VA 22161
703-605-6000 or 800-553-6847
or
DOE Information Bridge
http://www.doe.gov/bridge/home.html

Printed on paper containing at least 50% wastepaper, including 20% postconsumer waste

Small Wind Turbine Testing and Applications Development

Dave Corbus, Ian Baring-Gould, Steve Drouilhet, Vahan Gevorgian, Tony Jimenez, Charles Newcomb, Larry Flowers
National Renewable Energy Laboratory

Introduction

Small wind turbines offer a promising alternative for many remote electrical uses where there is a good wind resource. The National Wind Technology Center (NWTC), part of the National Renewable Energy Laboratory (NREL), helps to further the role that small wind turbines can play in supplying remote power needs by both testing and developing new applications for small turbines.

The goal of this work is to characterize small wind turbines, wind-diesel hybrid system components, and wind-hybrid systems and to develop new off-grid applications for small wind turbines in order to expand the international market for these systems. Projects fall into two classifications: applications development and testing. Testing includes both small turbines and wind-hybrid systems. Although the projects that fall under applications development and testing are varied, they all focus on the remote power market and all include small wind turbines as the power source. Specific project descriptions follow.

Battery Charging Stations. A conventional lead-acid car battery may be a cheap and reliable source of electrical power for small rural household applications in developing countries. Even the small amount of energy (~1 kWh) that these batteries store can sufficiently improve the quality of life for such areas, giving people access to electrical lighting, TV/radio, and other household conveniences. It is a common practice for rural inhabitants in developing countries to acquire electrical service by charging 12-volt, 50–100 amp-hour batteries from diesel-powered grids. The major advantage of a centralized battery-charging station is that it can bring electric service to a very low-income segment of the population. The use of wind-electric battery charging stations represents an alternative to conventional diesel-powered stations in many developing countries of the world. To date, there have been only a few examples of renewable-based battery charging stations, mostly using photovoltaics (PV). Although the design of a wind-powered battery charging station can be more complex (because of the nature of the wind resource), wind-powered stations offer greater economy of scale than PV stations. The studies conducted at NREL[1] identified an opportunity for a wind-electric battery charging station that

- Provides a fast charge yet protects the batteries
- Accepts batteries of various capacities
- Has high reliability and is simple to operate
- Is cost effective and viable in terms of logistic and operational issues.

The main technical challenge in the design of a wind-electric battery charging station is to come up with a system configuration and control algorithm that maximizes wind energy production from the turbine and also provides favorable charging conditions for batteries. This task is complex because of the variability of the wind, which results in varying wind turbine power output. Ideally, the system configuration and its controller should optimize the match between the wind rotor and load, thereby allowing the maximum available power from the wind to be used, while at the same time charging the batteries with an optimum (for a given type of battery) charge profile. This will maximize the number of batteries charged by a station within a certain time period.

During two years of research conducted at the NWTC, several wind-electric battery charging station architectures were examined, modeled, and tested. Based on this experience, a request for proposal was

sent to the U.S. industry, and a prototype battery charging development contract was granted to Ascension Technology, Inc., of Boulder, Colorado. The prototype station was developed and now is being tested at the NWTC. The system architecture and test set-up is represented in Figure 1.

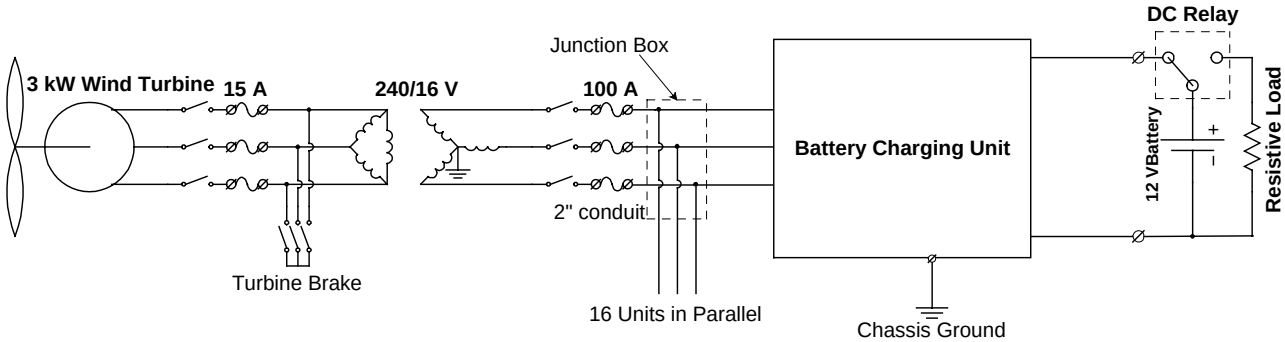

FIGURE 1. NWTC BATTERY CHARGING STATION EXPERIMENT

The battery charging station (BCS-1), designed by Ascension Technology, is a 200-watt power converter designed primarily for charging batteries. It has a three-phase full bridge rectifier to receive input power and convert that to direct current (DC). It has a DC/DC buck converter operating in current program mode control. The unit is a microprocessor-controlled device that controls the power level at which the converter operates. It has a voltage trim adjustment that can be used to set the maximum output voltage from 0.0 to 16.0 VDC. It has a current trim adjustment that can be used to set the maximum output current of the unit from 0.0 to 14.0 amps DC. The unit has been primarily designed to operate from the three-phase alternating current (AC) output of the wind turbine, although it can also operate from other sources such as PV. Input voltage of the BCS-1 is 0 to 64 volts AC, 0 to 120 Hz. Multiple BCS-1 units may be connected to a single power source to build a battery-charging station of any size, limited only by the power and energy availability of the source.

The BCS-1 is able to provide an optimum charging profile for a given battery. It will charge the battery at constant preset current until the battery voltage reaches some set point. After that, the BCS-1 will start limiting current in order to keep the battery voltage below the set point, thus protecting the battery from overcharge. Combining several BSC-1 units into a single multi-board unit is also under development.

Peak Power Tracker. Many small wind turbine generators consist of a variable-speed rotor driving a permanent-magnet synchronous generator (alternator). The principal application of such wind turbines is battery charging, in which the generator is connected through a rectifier to a battery bank. The wind turbine electrical interface is essentially the same whether the turbine is part of a remote power supply for telecommunications, a stand-alone residential power system, or a hybrid village power system; in short, any system where the wind generator output is rectified and fed to a DC bus. Field experience with such applications has shown that both the peak power output and the total energy capture of the wind turbine often fall short of expectations based on rotor size and generator rating.

The performance of permanent-magnet wind turbine generators (WTG) in battery charging applications is limited by a mismatch, over most of the operating wind speed range, of the rotor, generator, and load characteristics. The power available in the wind, for a given swept area, increases as the cube of the wind speed. A given wind turbine rotor has a certain tip-speed ratio at which it converts wind power to shaft power most efficiently. In order to convert the maximum possible fraction of available wind power to mechanical power, the rotor must operate at this optimal tip-speed ratio, with its revolutions per minute (RPM) varying in proportion to wind speed. The power conversion characteristics of an

alternator/rectifier/battery system are very different, however. At low alternator speeds, no power is transferred to the battery because the alternator does not generate sufficient voltage to overcome the reverse bias on the rectifier. At a certain shaft speed, current begins to flow to the battery and alternator power output increases very rapidly with increasing shaft speed. As alternator shaft speed (and therefore electrical frequency) increases further, however, power transfer to the battery is limited by the synchronous impedance of the alternator. Whereas the ideal match to the wind turbine rotor would be a power output increasing with the cube of the shaft speed, a point is reached with the standard alternator/rectifier/battery configuration where there is negligible increase in power with increasing shaft speed.

NREL has done a considerable amount of research to better understand the performance of small wind turbines in battery charging applications and to investigate approaches to improving their performance[2,3,4]. Because there is a large base of battery-charging small wind turbines worldwide, our research focused on the development of an actively controlled DC-DC power converter that could be retrofitted to existing wind turbines. This work culminated in the development and dynamometer testing of a proof-of-concept prototype maximum power point tracking battery charge controller, herein referred to as a "Peak Power Tracker." The concept is similar to the Maximum Power Point Tracker used to maximize the energy capture by photovoltaic panels. By decoupling the battery bank from the alternator, the rectifier output voltage, and by extension the alternator terminal voltage, can be controlled so as to optimize the electrical load seen by the alternator.

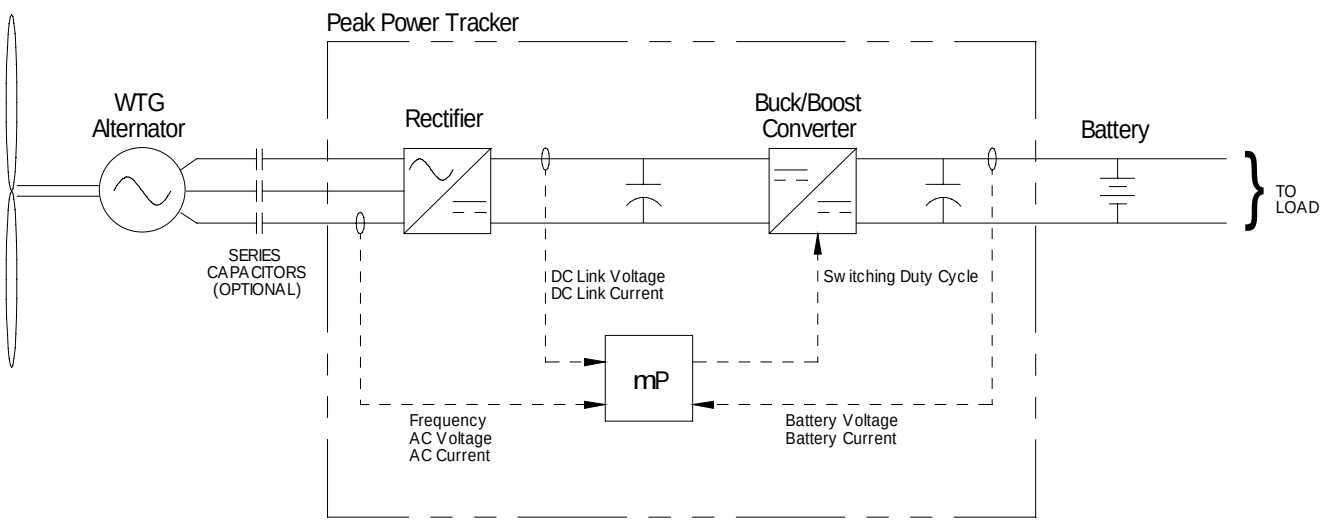

FIGURE 2. PEAK POWER TRACKER SCHEMATIC

A block diagram of the Peak Power Tracker is shown in Figure 2. The Peak Power Tracker is defined to consist of a rectifier stage, a buck/boost DC-DC converter, and an embedded microprocessor controller. NREL has recently awarded an industry contract for a commercial design for a peak power tracker that will help lead to commercialization of this technology.

Water Desalination/Purification. Water desalination and purification is one of the most important needs in many developing country remote communities. An experiment was conducted at NWTC in which an electrodialysis reversal (EDR) unit was run in series with an ultraviolet water purification unit. The goal of the experiment was to determine the operating characteristics for the system in terms of

energy consumption per liter produced, the maintenance required during the test, and the water production rate for different wind regimes.

The EDR unit was loaned to the NWTC from the U.S. Bureau of Reclamation. Previously, the unit underwent field tests using PV in Spencer Valley, New Mexico[5]. The ultraviolet (UV) water purification unit was bought off the shelf and plumbed to the output of the EDR unit. The EDR unit required no modification for the transfer to wind power and the UV water purification unit was powered off of one of the DC to DC converters in the EDR controller. The two units were connected to a Bergey Windpower Company 850-watt wind turbine in parallel with a single string of 8 Trojan L-16 batteries (350 Ah). Ten-minute averages of the battery bank voltage, wind speed, wind turbine current, battery bank current, EDR current and UV current were collected. Total dissolved solids (TDS) levels were collected twice daily to verify that both the feed water and product water TDS levels were within the desired range (900–1000 mg/L feed water, 250–350 mg/L product water).

The units were tested for a total of 1,473 hours, desalting and purifying over 97 m^3 of brackish water. The EDR unit consumed 114 watts of electricity while generating a 1.1 L/m flow rate of desalted water and the UV unit consumed a constant 45 watts of electricity. The UV unit is capable of processing up to 15 L/m; however, the limiting factor in this experiment was the flow rate of the EDR. During the test period, the units operated for 636 hours while connected to the wind turbine. With an average wind speed of 4 meters per second (m/s), the two units were able to operate 8.5 hours per day. The 12V pump motor brushes were replaced once. The units did not require any additional maintenance and ran unattended.

The energy consumption of the EDR unit during the test period was 1.76 kWh/m^3 of water processed. Battery efficiencies of 90% were observed. Figure 3 depicts a typical time series of product water TDS levels following a system reversal, whereby the polarity and the water flow of the EDR unit is reversed.

Wind power appears to be a viable power source for the EDR unit. However, the EDR unit works best when operated continuously, so either a larger wind turbine or a better wind regime should be utilized. The test results in terms of product flow rates and energy consumption differed from those reported by the Bureau of Reclamation.

These differences may be attributable to a leaking bypass valve in the feed pump that was discovered after the test was conducted. The EDR unit was found to be maintenance free for the duration of the test suggesting suitability for stand-alone, unattended operation. It is anticipated that the data collected during this test will prove useful in monitoring the performance of the EDR unit in the future.

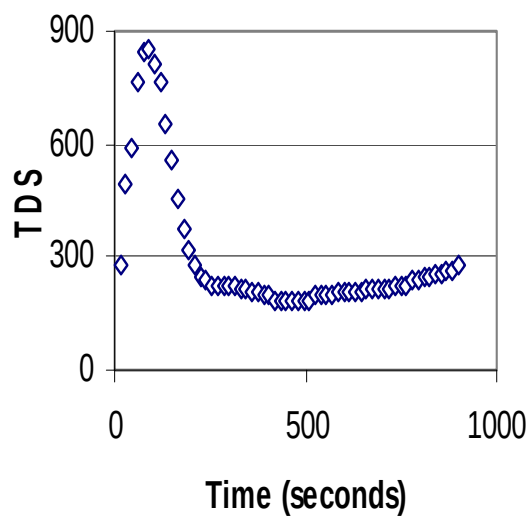

FIGURE 3. PRODUCT WATER TOTAL DISSOLVED SOLIDS (MG/L) FOLLOWING A SYSTEM REVERSAL

Health Clinic Replication. In a given community, the local health clinic and school are often the first facilities to be electrified[6]. To better demonstrate these applications, NREL is building a mock health clinic/school at the NWTC. The purpose of this replica is to provide a hands-on demonstration of applications that are compatible with stand-alone renewable energy systems. The mock-up is currently under construction. It will consist of a 10' x 20' prefabricated building on a concrete slab.

Power will be provided by a hybrid system composed of two Windseeker 503 wind turbines and a 240 W_p solar panel array. Applications will include lighting, communications, TV/video, water purification, medical appliances, and solar water heating and disinfection.

Data Acquisition Development. Reliable technical monitoring of hybrid power systems is crucial for evaluating their performance and cost and trouble shooting problems. Valid data sets can be fed into analytical models for a long-term simulation of the system's performance and development of recommendations to improve a system's operational characteristics. Typical monitoring systems for wind-diesel hybrid sites include the following major components: datalogger; wind speed/direction, solar radiation (depending on site) and temperature sensors; power measuring equipment (voltage, current, power transducers); fuel consumption gages (optional). The number of sensors and measurement frequency depends on the system's complexity and monitoring objectives.

NWTC has gathered a vast amount of experience in data acquisition system (DAS) development, installation, and testing for remote wind-diesel hybrid sites in various countries including Mexico, Chile, Brazil, and Russia. These systems have proved their reliability and durability over long periods of operation and have provided a number of important data sets. However, a recurrent problem with these systems is that the retrieval of stored data is not reliable.

To address this, NREL is working with the Southwest Technology Development Institute at New Mexico State University in Las Cruces, New Mexico, to develop three advanced DAS units to be used as the model upon which all other DAS installed on remote power systems by the laboratory will be designed. These monitoring stations are equipped with remote communication capabilities through the use of satellites or cellular telephones. One of these prototype systems will be installed at the NWTC while two other similar systems will be used on power systems in southern Chile. Technicians at NREL have also constructed an additional DAS that has been installed in San Juanico, Mexico, to monitor a large power system at that location. All of these state-of-the-art DAS units have incorporated the "lessons learned" from previous installations.

Small Turbine Testing. The role of the applications group in small turbine testing is in developing a database of wind turbines, which includes performance, robustness, and functionality data. This information is very useful as feedback to the industry, and it is important in evaluating turbines for international pilot projects.

Wind turbine power and the wind resource are measured during the performance testing. While the turbine performance characterization process does not, nor is it meant to, produce power curves in accordance with international certification standards, it does serve as a useful tool for long-term monitoring by providing a quantitative means of tracking turbine performance over time. We have found that careful examination of the collected performance data can identify potential improvements in the turbine design.

While a decrease in wind turbine production over time provides a clear indication of what portions of the power generation systems need improvements or optimization, the more frequent type of failure observed in the field is that which results in complete loss of power generation capability. The wind turbine and its control system's characteristics that lead to this type of failure are best revealed by long term exposure to a variety of conditions including severe wind conditions.

The wind regime at the NWTC includes periods of sustained high winds along with moments of hurricane force winds. As a result, the NWTC as a test bed is very effective at exposing turbine and controller weaknesses, which may manifest themselves only after extended periods of field deployment. Each wind turbine tested at the NWTC is operated for at least 1,500 hours above cut-in wind speed. Periodically,

throughout the test, the wind turbine and controller are inspected both visually for wear and for electrical performance characteristics. Information gleaned from these tests regarding possible improvements to the wind turbines and controllers is provided to the manufacturers. The resulting modifications made by the manufacturers lead to more reliable wind turbine systems and more favorable field deployments.

Future Work

Future work for the applications development and testing team will include continued testing of commercial or near-commercial products for the remote electrification market. Specifically, controllers for wind-electric water pumping systems will be tested. Adding to the health post replication will be a rural productivity zone replication that will demonstrate some of the common productive use applications (i.e., income generating) found in remote communities that are powered from renewable energy systems. Small wind hybrid systems and data acquisition systems will continued to be tested. Finally, the prototype peak power tracker under development by Ascension Technology will be tested at the NWTC.

References

1. Gevorgian, V.; Corbus, D.; Drouilhet, S.; Holz, R.; Thomas. K. "Modeling, Testing, and Economic Analysis of a Wind-Electric Battery Charging Station." NREL/CP-500-24920. *Proceedings of the 1998 Windpower Conference, Bakersfield, California, April 27–May 1, 1998.* Washington, DC: American Wind Energy Association.

2. Muljadi, E.; Drouilhet, S.; Holz, R.; Gevorgian, V. "Analysis of Permanent Magnet Generator for Wind Power Battery Charging." *IAS '96: Conference Record of the 1996 IEEE Industry Applications Conference, Thirty-First IAS Annual Meeting, 6-10 October 1996, San Diego, California.* New York: The Institute of Electrical and Electronics Engineers, Inc.; Vol. 1: pp. 541-548; NREL Report No. 22909.

3. Muljadi, E.; Drouilhet, S.; Holz, R.; Gevorgian, V. (1996). "Analysis of Wind Power for Battery Charging." *Wind Energy Book VIII: Conference Papers—Proceedings from Energy Week '96, 29 January–2 February 1996, Houston, Texas.* (Incorporating ASME's Energy-Sources Technology Conference and Exhibition). New York: American Society of Mechanical Engineers; Vol. I: pp. 190-197; NREL Report No. 21862.

4. Drouilhet, S.; Muljadi, E.; Holz, R.; Gevorgian, V. *Optimizing Small Wind Turbine Performance in Battery Charging Applications.* NREL/TP-441-7808. Golden, CO: National Renewable Energy Laboratory, 1995.

5. Lichtwardt, M.; Remmers, H. "Applying Solar Technologies to Improve Water Quality at a Remote Navajo Community," *Currents.* Spring/Summer 1994; pp. 26–31.

6. Jimenez, T.; Olson, K. *Renewable Energy for Rural Health Clinics*. NREL/BK-500-25233. Golden, CO: National Renewable Energy Laboratory, 1998.