Revised October 2004 • NREL/SR-500-35524

Subcontractor Report

Northern Power Systems WindPACT Drive Train Alternative Design Study Report

April 12, 2001 to January 31, 2005

G. Bywaters, V. John, J. Lynch, P. Mattila, G. Norton, and J. Stowell
Northern Power Systems

M. Salata
General Dynamics Electric Boat

O. Labath
Gear Consulting Services of Cincinnati

A. Chertok and D. Hablanian
TIAX

National Renewable Energy Laboratory
1617 Cole Boulevard, Golden, Colorado 80401-3393
303-275-3000 • www.nrel.gov

Operated for the U.S. Department of Energy
Office of Energy Efficiency and Renewable Energy
by Midwest Research Institute • Battelle

Contract No. DE-AC36-99-GO10337

Revised October 2004 • NREL/SR-500-35524

Northern Power Systems WindPACT Drive Train Alternative Design Study Report

April 12, 2001 to January 31, 2005

G. Bywaters, V. John, J. Lynch, P. Mattila, G. Norton, and J. Stowell
Northern Power Systems

M. Salata
General Dynamics Electric Boat

O. Labath
Gear Consulting Services of Cincinnati

A. Chertok and D. Hablanian
TIAX

NREL Technical Monitor: A. Laxson

Prepared under Subcontract No. YCX-1-30209-02

National Renewable Energy Laboratory
1617 Cole Boulevard, Golden, Colorado 80401-3393
303-275-3000 • www.nrel.gov

Operated for the U.S. Department of Energy
Office of Energy Efficiency and Renewable Energy
by Midwest Research Institute • Battelle

Contract No. DE-AC36-99-GO10337

NOTICE

This report was prepared as an account of work sponsored by an agency of the United States government. Neither the United States government nor any agency thereof, nor any of their employees, makes any warranty, express or implied, or assumes any legal liability or responsibility for the accuracy, completeness, or usefulness of any information, apparatus, product, or process disclosed, or represents that its use would not infringe privately owned rights. Reference herein to any specific commercial product, process, or service by trade name, trademark, manufacturer, or otherwise does not necessarily constitute or imply its endorsement, recommendation, or favoring by the United States government or any agency thereof. The views and opinions of authors expressed herein do not necessarily state or reflect those of the United States government or any agency thereof.

Available electronically at http://www.osti.gov/bridge

Available for a processing fee to U.S. Department of Energy
and its contractors, in paper, from:
U.S. Department of Energy
Office of Scientific and Technical Information
P.O. Box 62
Oak Ridge, TN 37831-0062
phone: 865.576.8401
fax: 865.576.5728
email: mailto:reports@adonis.osti.gov

Available for sale to the public, in paper, from:
U.S. Department of Commerce
National Technical Information Service
5285 Port Royal Road
Springfield, VA 22161
phone: 800.553.6847
fax: 703.605.6900
email: orders@ntis.fedworld.gov
online ordering: http://www.ntis.gov/ordering.htm

Printed on paper containing at least 50% wastepaper, including 20% postconsumer waste

Executive Summary

The National Renewable Energy Laboratory (NREL) Wind Partnerships for Advanced Component Technologies (WindPACT) project seeks to advance wind turbine technology by exploring innovative concepts in drivetrain design. A team led by Northern Power Systems (Northern) of Waitsfield, Vermont, was chosen to perform this work. Conducted under subcontract YCX-1-30209-02, project objectives are to identify, design, and test a megawatt (MW)-scale drivetrain with the lowest overall life cycle cost. The project entails three phases:

- Preliminary study of alternative drivetrain designs (Phase I)
- Detailed design development (Phase II)
- Proof of concept fabrication and test (Phase III).

This report summarizes the results of the preliminary design study (Phase I).

Approach

In Phase I, the Northern team assessed current technology, studied proposed drivetrain designs, and evaluated trade-offs among proposed designs to identify a megawatt-scale drivetrain for development and testing in subsequent phases of the project. The preliminary study evaluated each design to determine size, weight, and probable cost of energy over a range of sizes. The study considered all major components of drivetrain design. The proposed designs considered all loading conditions identified by NREL in the statement of work (SOW). Manufacturing, tooling, and transportation costs were also considered.

We began by selecting the rotor size, after which we calculated turbine loads. After developing conceptual designs for each drivetrain type, we designed the gearing and generators. Next we completed the structural design of the main load-carrying members. Lastly, we determined costing for each configuration, including the balance of turbine.

The original NREL subcontract stipulated examining drivetrain configurations over a range of sizes from 1 MW to 10 MW. NREL modified the range to focus on drivetrains at the 1.5-MW and 3-MW levels. The Northern team used a similar approach for both the 1.5-MW and 3-MW levels. Scaling laws *were not* used in the course of the analysis. We believe that the use of scaling laws is prone to large errors, and with efficient design and analysis techniques, more accurate costing can be achieved.

Estimates for component and manufacturing costs were supported by detailed rationale or vendor data. Manufacturing costs were based on the production of 200 MW of capacity per year on an ongoing basis. The designs were optimized for variable speed operation, characterized by high efficiencies at a wide range of rotational speeds and power levels.

The analysis methodology began with establishing criteria for evaluating drivetrain options. Sets of primary and secondary criteria were developed. The primary evaluation metrics included first cost and cost of energy (COE). Our secondary evaluation metrics included part count, weight, size (envelope), and operations and maintenance (O&M) costs.

Table 1. List of Participants in WindPACT Program

Company	Location	Role
Northern Power Systems	Waitsfield, Vermont	Prime contractor, project management, turbine systems design, power electronics design, modeling and integration
General Dynamics Electric Boat	Groton, Connecticut	Generator design and costing
TIAX (formerly Arthur D. Little, Inc.)	Cambridge, Massachusetts	O&M analysis and modeling
Gear Consulting Services of Cincinnati (formerly Cincinnati Gear Company)	Cincinnati, Ohio	Gearing design and costing
Adept Engineering	Glen Cove, New York	System layout and structural design
Catamount Engineering	Waitsfield, Vermont	System layout and structural design
Comprehensive Power	Shrewsbury, Massachusetts	Generator costing model
Windward Engineering	Salt Lake City, Utah	Turbine loads modeling

Participants

The WindPACT project is conducted under directive from NREL, with active participation from personnel at the National Wind Technology Center (NWTC) at Boulder, Colorado. Northern, the prime subcontractor, assembled a highly qualified team for Phase I of the WindPACT project. Table 1 identifies team members (in bold) and contributing consultants, along with their major roles.

Drivetrain Configurations

The WindPACT SOW describes a number of alternative drivetrain configurations for consideration in Phase I. With input from NREL, the Northern team divided the SOW system design alternatives into four subsets for in-depth evaluation.

Baseline Multiple-Stage, Gear-Driven, High-Speed, Wound-Rotor Induction Generator (Baseline)

The baseline drivetrain, so-called because of its widespread commercial installed base, employs a Cincinnati Gear multiple-stage hybrid gear speed increaser with a planetary low-speed front-end followed by two helical parallel shaft stages to achieve a nominal output speed suitable for a six-pole (1200-rpm) wound rotor induction generator (WRIG). The baseline drivetrain uses an industry-standard power electronics package.

The arrangement of the complete drivetrain is shown in Figure 1. The rotor hub drives the gearbox through a main shaft–bearing arrangement. The main bearing is a pillow block-mounted, double-row spherical bearing. The gearbox drives the generator through a flexible coupling,

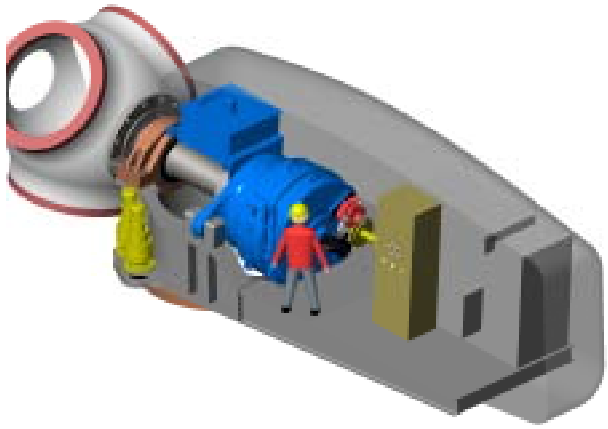

Figure 1. A 1.5-MW baseline drivetrain.

which has an integral brake disk, mechanical fuse, and provides electrical isolation. The generator package includes the rotor slip rings and heat exchanger. Provisions are made for a slip ring, which feeds the blade pitch system.

Because the baseline drivetrain was the benchmark for evaluating alternative designs, the Northern team strove to make the drivetrain design reflect the latest component technology in a well-established industry configuration with a documented record of performance.

Direct-Drive, Low-Speed, Permanent Magnet Generator (PMDD)

Direct-drive generators offer significant potential because they eliminate the gear-speed increaser, which is susceptible to significant accumulated fatigue torque loading, related reliability issues, and maintenance costs. Employing a synchronous field permanent magnet generator, the PMDD configuration is gaining strong interest because it offers simplicity and potential reduction in size, weight, and cost compared with a drivetrain incorporating a wound-field generator rotor.

Figure 2 shows the arrangement of the complete PMDD drivetrain and associated tower-top structure. The figure shows an integrated single-bearing design composed of a low-speed PM generator, turret with yaw drives, and nacelle housing. The generator assembly is composed of the main bearing, stator and rotor electromagnetics, spindle, stator ring and frame, brake system, water jacket, and associated hardware.

The rotor hub and generator rotor are connected directly to the outer race of the main bearing. The inner race of the main bearing is pressed onto the spindle. The stator frame is connected to the base of the spindle, and the stator ring is bolted to the outside diameter (OD) of the arms. The spindle is bolted to the turret, which provides the structural path to the tower top. A slip ring (which feeds the blade pitch system) and a rotor lock are provided.

Gear-Driven, Medium-Speed, Single-Output Generator (MS-1)

Wind turbines using a single-stage gearbox coupled with a low- to medium-speed generator combine the benefits of both gearing and specialty generators. Single-stage gearing, which decreases the size of the generator, can use either a wound rotor synchronous generator or a

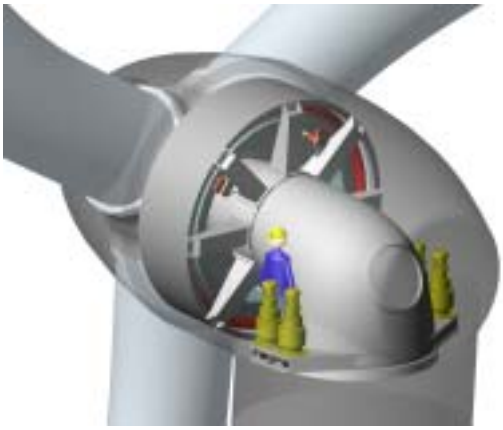

Figure 2. A 1.5-MW PMDD drivetrain.

permanent magnet generator. For our drivetrain study, the Northern team chose the PM generator for its performance advantages and relative simplicity when compared with the wound rotor generator.

The integrated drivetrain, which we refer to as MS-1 (Figure 3), is composed of a 13.89:1 compound planetary helical box with a medium-speed PM generator. (In Figure 3, the nacelle and rotor hub are removed for clarity.) The drivetrain is composed of the compound planetary helical gearbox, medium-speed generator, turret, brake system, and yaw system. The rotor hub is connected directly to the inner race of the main bearing. The inner race of the main bearing is mounted to the gearbox carrier, and its outer race is mounted to the gearbox casing. The generator is mounted to the gear case using flanges on the gearbox and generator housings. The turret design brings the moment loading of the turbine rotor directly from the main bearing into the turret structure, with minimal impact on the gear alignments. Located on the back of the generator, the parking brake system is composed of a brake disk, calipers, and hydraulic system. A slip ring, which feeds the blade pitch system, is provided.

Figure 3. A 1.5-MW MS-1 drivetrain.

Figure 4. A 1.5-MW MS-6 drivetrain.

Gear-Driven, Medium-Speed, Six-Output Generator (MS-6)

The MS-6 configuration is an integrated drive composed of a large-diameter bull gear driving six pinions, which interface with six, medium-speed PM generators. This configuration, shown in Figure 4, is favored by some because of the possibility of using smaller, conventional (and perhaps less expensive) generators for power production. The drive unit is composed of the main bearing, bull gear, pinions, spindle, generators, brake system, and associated hardware. The rotor hub and bull gear are connected directly to the outer race of the main bearing.

The inner race of the main bearing is pressed onto the spindle, which is composed of the central tube (providing the main load path) and the disk, which provides the mounting frame for the generators. The six generator housings are directly connected to the disk and interface the bull gear though the pinions. The pinions are cantilevered off the generator bearings. The spindle is bolted to the turret, which provides the structural path to the tower top. A parking brake system composed of disks and calipers is used. A slip ring, which feeds the blade pitch system, and a rotor lock, which interfaces with the bull gear, are provided.

Results and Recommendations

The results of the Phase I drivetrain study show commercial potential for two configurations: the medium-speed/single-output (MS-1) design and the permanent magnet direct-drive (PMDD) design. Both configurations appear competitive at the 1.5-MW and 3-MW power levels with the industry state-of-the-art baseline turbine.

Inherent design characteristics of the PMDD drivetrain make its performance more favorable as the generator diameter increases. The main limitation on maximum diameter is shipping constraints in the target markets. As our report describes, two diameters—5.3 m and 4 m—are appealing for the United States and European markets, respectively. As part of Phase I, we considered machine designs at both diameters.

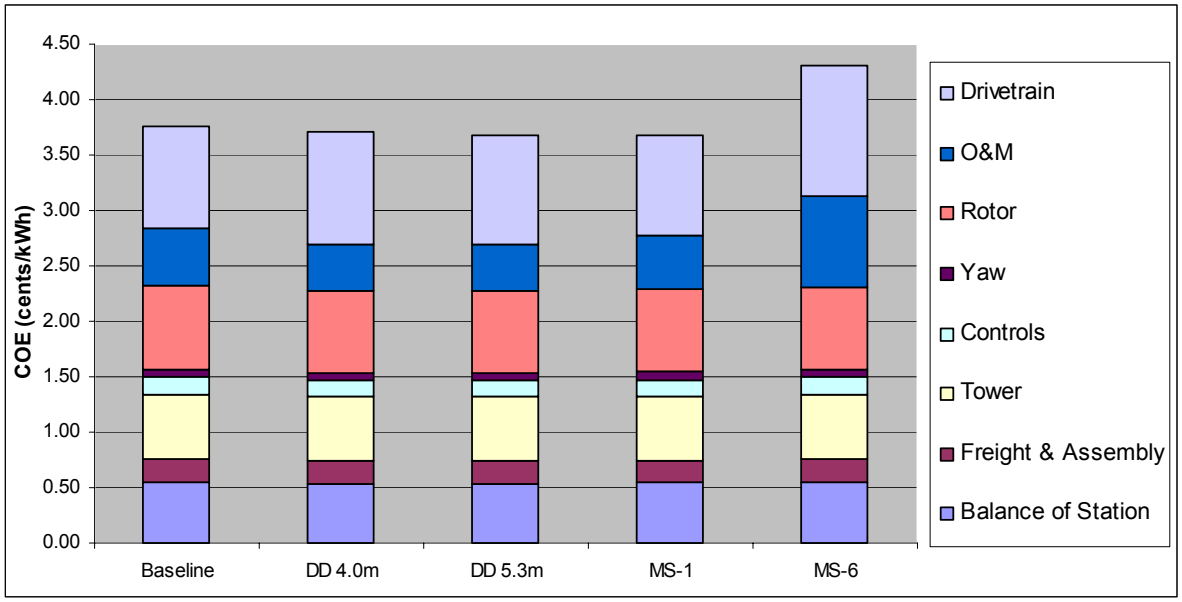

Figure 5. Cost of energy: 1.5-MW configurations.

Our analysis in Phase I predicted a reduction in COE for both the 4-m-diameter PMDD (1.5% reduction) and the MS-1 (2.2% reduction) configurations compared with the 1.5-MW baseline turbine. The 5.3-m-diameter 1.5-MW PMDD shows the lowest COE of all configurations—2.3% below the baseline turbine. Economies of scale favored all turbines at increased power levels. All 3-MW designs show a downward trend in COE compared with the 1.5-MW designs.

In selecting a drivetrain configuration for further development, the Northern team also considered factors unaccounted for in the COE calculations, such as technology and industry trends that impact future competitiveness and market acceptance. Of major importance is the maturity level of the intrinsic technology—evolving technologies have inherently greater potential for improvement. With this in mind, it is far more likely that technological improvements will reduce costs for new PMDD designs than for mature baseline/gearbox designs. Magnet and power electronics costs, major factors in the capital cost of the PMDD configuration, continue to decline steadily. The same cannot be said of the steel, copper, and gearbox costs that dominate the gear-based drivetrains.

Industry and market trends also support the selection of the PMDD configuration. The team identified strong industry interest in an integrated turbine with a PM generator. The commercial wind turbine market is dominated by large, megawatt-scale machines. Direct-drive systems, both with and without PM generators, are becoming popular in this size range. At least six wind industry players are exploring and implementing direct-drive configurations at various levels.

Therefore, the Northern Power Systems team recommends the PM generator applied in a direct-drive configuration for detailed design, manufacturing, and testing in Phases II and III of the WindPACT project.

Acronyms and Abbreviations

A	ampere
AC	alternating current
AEP	annual energy production
AGMA	American Gear Manufacturers Association
ANSI	American National Standards Institute
AOE	annual operating expenses
AOM	annual operation and maintenance
AWEA	American Wind Energy Association
BOM	bill of materials
BOS	balance of station
C	Centigrade
COE	cost of energy
Cp	coefficient of performance
DB	dynamic brake
DC	direct current
DD	direct drive
DF	doubly fed
DFIG	doubly fed induction generator
DLC	design loads case
DOE	U.S. Department of Energy
DSP	digital signal processing
EBGD	Electric Boat General Dynamics
EM	electromagnetic
EMF	electromotive force
EMI	electromagnetic interference
EPRI	Electric Power Research Institute
FAST	fatigue, aerodynamics, structures, turbulence
FCR	fixed-charge rate
FEA	finite element analysis
FOB	free on board
FOC	field-oriented control
G&A	general and administrative
GCB	Generator Cost Builder
GCSC	Gear Consulting Services of Cincinnati
GDEB	General Dynamics Electric Boat
GL	Germanischer Lloyd
GTO	Gate Turnoff Thyristor
HS	high speed
Hz	Hertz
In.	inch
I/O	input/output
ICC	initial capital cost
IEC	International Electrotechnical Commission

IEEE	Institute of Electrical and Electronics Engineers
IEGT	injection-enhanced gate transistor
IGBT	insulated gate bipolar transistor
IGCT	integrated gate commutated thyristor
ISO	International Organization for Standardization
kg	Kilogram
khz	kilohertz
kNm	kilo Newton meters
kV	kilovolt
kVA	kilovolt ampere
kW	kilowatt
kWh	kilowatt hour
lb	pound
LCC	life cycle cost
LCL	inductor capacitor inductor topology
L/D	length-to-diameter
LS	low speed
LSS	low-speed shaft
m	meter
m/s	meters per second
MMF	magnetomotive force
mps	meters per second
ms	millisecond
MS-1	medium speed/single output
MS-6	medium speed/six output
MS/MO	multiple stage/multiple output
MTA	maximum torque per ampere
MTBF	mean time between failures
MTTR	mean time to repair
MVA	megavolt ampere
MW	megawatt
NdFeB	neodymium iron boron
NEMA	National Electrical Manufacturers Association
NREL	National Renewable Energy Laboratory
NTM	normal turbulence model
O&M	operations and maintenance
OD	outside diameter
PE	power electronics
PEBB	power electronics building block
PI	proportional integral
PLC	programmable logic controller
PM	permanent magnet
PMG	PM generator
PMDD	permanent magnet direct drive
PMSG	permanent magnet synchronous generator
PMSM	permanent magnet synchronous machines

pu	per unit
PMG	permanent magnet generator
PWM	pulse width modulation
QA	quality assurance
R&D	research and development
RCL	resistor capacitor inductor topology
rms	root mean square
rpm	rotations per minute
SCR	semiconductor-controlled rectifier
SOW	statement of work
SPP	slots per pole per phase
SS/MO	single stage/multiple output
SS/SO	single stage/single output
SVC	static VAR compensator
TDD	total demand distortion
THD	total harmonic distortion
TVC	terminal voltage control
U	ultimate
UI	utility inverter
UL	Underwriters Laboratories Incorporated
V	volt
V/ц	volts per microsecond
VA	volt ampere
VAR	volt ampere, reactive
VS	variable speed
WR	wound rotor
wrt	with respect to
WRIG	wound rotor induction generator
WTGS	Wind Turbine Generator System

Table of Contents

Executive Summary

Acronyms and Abbreviations

1 Introduction 1-1
1.1 Project Team 1-1
1.2 Drivetrain Configurations 1-2
1.3 Turbine Sizes 1-3
1.4 Project Approach 1-3

2 WindPACT Drivetrain Study Parameters 2-1
2.1 Drivetrain Design Criteria 2-1
2.2 Drivetrain Matrix 2-1
2.2.1 Concept 1: Baseline Configuration 2-2
2.2.2 Concept 2: Direct-Drive Configuration 2-2
2.2.3 Concept 3: Gear-Driven, Medium-Speed Configuration 2-3
2.2.4 Concept 4: Multiple-Path Configuration 2-3

3 Approach 3-1
3.1 Design Methodology 3-1
3.1.1 Gearbox 3-1
3.1.2 Generator 3-2
3.1.3 Power Electronics 3-2
3.1.4 System and Structural Design 3-2
3.1.5 Drivetrain Configurations 3-3
3.2 Analysis Methodology 3-4

4 Technology Assessment 4-1
4.1 Commercial Wind Turbines 4-1
4.2 Previous Drivetrain Studies 4-7
4.3 Industry Trends 4-8
4.3.1 Market Survey 4-9
4.3.2 Technology Trends 4-11
4.4 Drivetrain Component Reliability 4-16
4.5 Drivetrain Technology Options 4-17
4.5.1 Gearboxes 4-17
4.5.2 Generators 4-18
4.5.3 Power Converter 4-26

Table of Contents (continued)

5 Design Specifications and Parameters 5-1
5.1 Selection of Rotor Diameter 5-1
5.2 Turbine Specifications 5-3
5.2.1 Turbine Architecture 5-3
5.2.2 Drivetrain Specifications 5-3
5.2.3 Turbine Safety and Operation 5-4
5.2.4 Power Curves 5-5
5.2.5 Other 5-6
5.2.6 Structural and Mechanical Design 5-6
5.2.7 Electrical Design 5-7
5.2.8 Physical Environment 5-8
5.2.9 Maintenance 5-8
5.3 Loads 5-8
5.3.1 Loads Cases 5-9
5.3.2 Modeling 5-9
5.3.3 Input Files 5-14
5.3.4 Turbine Design Loads 5-14
5.3.5 Dynamics 5-14

6 Selected Drivetrain Technologies 6-1
6.1 Generator 6-1
6.1.1 Design Studies 6-1
6.1.2 Permanent Magnet Generator Design Considerations. 6-2
6.1.3 Design Methodology 6-2
6.2 Power Converter 6-3
6.2.1 Power Converter Topology 6-3
6.2.2 Drivetrain Voltages 6-8
6.2.3 Power Converter Specifications 6-10
6.3 Gearbox 6-14
6.3.1 Design Methodology 6-15
6.4 Results of Preliminary Drive Investigations 6-17

Table of Contents (continued)

7 Drivetrain Designs 7-1
7.1 Baseline Design 7-1
7.1.1 Gearing 7-2
7.1.2 Generator and Power Converter 7-4
7.2 Permanent Magnet Direct-Drive Design 7-6
7.2.1 Generator 7-6
7.2.2 Power Converter 7-11
7.2.3 Structural Design 7-13
7.2.4 Alternative Direct-Drive Configurations 7-14
7.3 Medium-Speed/Single-Output Design 7-16
7.3.1 System Design 7-17
7.3.2 Gearing 7-18
7.3.3 Generator 7-20
7.3.4 Power Converter 7-21
7.3.5 Structural Design 7-23
7.3.6 Alternative Structural Designs 7-24
7.4 Medium-Speed/Six-Output Design 7-25
7.4.1 System Design 7-26
7.4.2 Gearing 7-28
7.4.3 Generator 7-29
7.4.4 Power Converter 7-31
7.4.5 Structural Design 7-33

8 COE Development 8-1
8.1 Initial Capital Cost 8-3
8.1.1 Component Costs 8-3
8.1.2 Assembly and Freight Costs 8-9
8.1.3 Balance-of-Station Costs 8-9
8.2 Annual Operation and Maintenance 8-10
8.3 Annual Energy Production 8-10
8.3.1 Wind Regime 8-10
8.3.2 Power Curve 8-11
8.3.3 Availability 8-11
8.3.4 Net Losses 8-11
8.3.5 Drivetrain Efficiency 8-11
8.4 Fixed-Charge Rate 8-15

Table of Contents (continued)

9 Results 9-1
9.1 Drivetrain Costs 9-1
9.2 Operation and Maintenance Costs 9-4
9.3 Annual Energy Production 9-7
9.4 Cost of Energy 9-7
9.5 Trends 9-11

10 Conclusions and Recommendations 10-1

11 References 11-1

Appendices

A Direct-Drive Generator Design
B WindPACT Turbine Specification
C NW1500 Loads Specification
D WindPACT Drivetrain Loads Document
E Generator Technology
F Power Converter Technology
G Cost and Availability of Neodymium Iron Boron Magnets
H Gearbox Design Study
I Operations and Maintenance Analysis
J NW3000 Loads Specification

List of Figures

Chapter 4

Figure 4-1. Drivetrain configurations 4-2
Figure 4-2. Nacelle weight versus rated power of commercial wind turbines 4-7
Figure 4-3. Advantages of direct-drive turbines 4-9
Figure 4-4. Disadvantages of direct-drive turbines 4-10
Figure 4-5. Rare-earth magnet cost and production trends 4-12
Figure 4-6. Magnet quote comparison 4-12
Figure 4-7. Short-term magnet cost trends 4-13
Figure 4-8. Historical development of switching power for power semiconductor devices 4-14
Figure 4-9. Development and integration of power semiconductors and modules 4-15
Figure 4-10. Average industrial drive cost trend 4-15
Figure 4-11. Cincinnati Gear 1.5-MW gear unit 4-17
Figure 4-12. ABB Windformer™ generator 4-21
Figure 4-13. PM axial flux configuration 4-22
Figure 4-14. Installation of Jeumont J-48 direct-drive turbine with PM axial flux generator 4-22
Figure 4-15. Double-gap, two-phase transversal machine 4-23
Figure 4-16. Single-sided, three-phase transversal flux machine 4-24

Chapter 5

Figure 5-1. Comparison of specific rating data 5-2
Figure 5-2. Specific rating trend for one manufacturer's blade line 5-3
Figure 5-3. The1.5-MW baseline power curve 5-5
Figure 5-4. The 3-MW baseline power curve 5-6
Figure 5-5. Hub coordinate system 5-10
Figure 5-6. Nacelle coordinate system 5-10
Figure 5-7. The 1.5-MW Campbell diagram 5-14
Figure 5-8. The 3-MW Campbell diagram 5-14

Chapter 6

Figure 6-1. Power converter topology for direct-drive and MS-1 configurations 6-5
Figure 6-2. (A) Power converter for multiple-path configuration with six generators (*B*) Power converter for individual generator 6-7
Figure 6-3. DC bus operating range 6-9
Figure 6-4. Block diagram of drivetrain for power converter specification 6-11
Figure 6-5. Nominal turbine power curve 6-12
Figure 6-6. Steps in developing multiple-output gearing devices 6-15
Figure 6-7. Overview of gearbox and associated drive costs 6-17
Figure 6-8. Drive envelope comparison 6-18
Figure 6-9. Drive weight comparison 6-18

List of Figures (continued)

Chapter 7

Figure 7-1. A 1.5-MW 70-m baseline design 7-1
Figure 7-2. A 1.5-MW compound planetary helical gearbox 7-2
Figure 7-3. A 3-MW compound planetary helical gearbox 7-3
Figure 7-4. Power converter one-line 7-4
Figure 7-5. Baseline drivetrain detail 7-5
Figure 7-6. FEA of bedplate 7-6
Figure 7-7. PMDD drivetrain 7-7
Figure 7-8. PMDD generator 7-7
Figure 7-9. Generator costs 7-8
Figure 7-10. Drivetrain efficiency comparison 7-10
Figure 7-11. PMDD (and MS-1) power electronics schematic 7-12
Figure 7-12. FEA of turret 7-13
Figure 7-13. FEA of spindle 7-14
Figure 7-14. Alternative direct-drive configurations 7-15
Figure 7-15. MS-1 drivetrain design 7-16
Figure 7-16. Epicyclic drive cost comparison 7-17
Figure 7-17. Epicyclic drive weight comparison 7-18
Figure 7-18. A 1.5-MW MS-1 gearbox 7-19
Figure 7-19. MS-1 generator section view 7-20
Figure 7-20. A 1.5-MW MS-1 generator cost versus diameter 7-21
Figure 7-21. MS-1 (and PMDD) power electronics schematic 7-22
Figure 7-22. FEA of turret 7-23
Figure 7-23. Alternative tower-top designs 7-24
Figure 7-24. MS-6 design 7-25
Figure 7-25. MS-6 drive unit 7-26
Figure 7-26. MS-6 drive unit costs versus gear ratio 7-27
Figure 7-27. Drivetrain weight comparison 7-27
Figure 7-28. Drivetrain envelope comparison 7-28
Figure 7-29. MS-6 generator section view 7-29
Figure 7-30. MS-6 generator cost versus diameter 7-30
Figure 7-31. (A) Power electronics for MS-6 design (*B*) Power electronics for individual generator 7-32
Figure 7-32. FEA of turret 7-33
Figure 7-33. FEA of spindle and generator mount 7-34

Chapter 8

Figure 8-1. Cost of energy inputs 8-2
Figure 8-2. Design Input Sheet 8-4
Figure 8-3. Manufacturing Cost Input Sheet 8-5
Figure 8-4. Cost Calculation Sheet 8-6
Figure 8-5. The 1.5-MW total drivetrain efficiencies 8-12

List of Figures (continued)

Figure 8-6. Drivetrain efficiency calculations 8-13
Figure 8-7. Electrical efficiency versus load for types of generators 8-14

Chapter 9

Figure 9-1. Component cost centers: 1.5-MW configurations 9-3
Figure 9-2. Component cost centers: 3-MW configurations 9-3
Figure 9-3. O&M cost centers: 1.5-MW configurations 9-6
Figure 9-4. O&M cost centers: 3-MW configurations 9-7
Figure 9-5. Multiple generator costs 9-10
Figure 9-6. COE cost centers: 1.5-MW configurations 9-11
Figure 9-7. COE cost centers: 3-MW configurations 9-12
Figure 9-8. Relative drivetrain weights 9-13
Figure 9-9. Drivetrain specific cost 9-13
Figure 9-10. COE trends 9-14

List of Tables

Chapter 2

Table 2-1. Drivetrain Configuration Matrix 2-2

Chapter 4

Table 4-1. Drivetrain Configurations of Nonstandard Commercial Turbines 4-3
Table 4-2. “High Potential” Direct-Drive Projects 4-3
Table 4-3. Commercial Wind Turbine Specifications (Rated Power ≥1 MW) 4-4
Table 4-4. Commercial Wind Turbine Prices (Rated Power ≥1 MW) 4-5
Table 4-5. Commercial Wind Turbine Weights (Rated Power ≥1 MW) 4-6
Table 4-6. Purchasing Criteria 4-10
Table 4-7. Estimated O&M Costs for Gear-Driven 650- to 900-kW Turbines 4-11
Table 4-8. Reliability Comparison of Gearbox and Direct-Drive Configurations 4-16
Table 4-9. Estimated Gearbox Costs for 650- to 900-kW Turbines 4-18
Table 4-10. Types of Generators for Megawatt-Scale Turbines 4-19
Table 4-11. Distinguishing Features of Radial, Axial, and Transversal Flux Generators 4-21
Table 4-12. Radial Flux Generator Architectures 4-24
Table 4-13. Normalized Weight and Cost of Materials of Favorable Generators 4-25

Chapter 5

Table 5-1. Turbine Drivetrain Specifications—IEC WTGS Class II 5-4
Table 5-2. Power Converter Attributes 5-7
Table 5-3. Physical Environment of Turbine 5-8
Table 5-4. Design Loads Cases 5-9
Table 5-5. Output Loads 5-11
Table 5-6. Material Exponents 5-13
Table 5-7. Partial Loads Factors 5-13

List of Tables (continued)

Chapter 6

Table 6-1. Estimated Power Converter Cost as a Function of the Number of Parallel Paths 6-6
Table 6-2. Nominal Wind Power Curve 6-12
Table 6-3. Generator 6-13
Table 6-4. Generator-Side Active Rectifier Bridge 6-13
Table 6-5. Inverter Bridge 6-14
Table 6-6. Brake Chopper 6-14

Chapter 7

Table 7-1. Cooling Method Tradeoff in 1.5-MW PMDD Generator 7-10
Table 7-2. PMDD Generator Specifications 7-11
Table 7-3. MS-1 Drivetrain Specifications 7-18
Table 7-4. MS-1 Gearbox Specifications 7-19
Table 7-5. MS-1 Generator Specifications 7-21
Table 7-6. MS-6 Drivetrain Specifications 7-28
Table 7-7. MS-6 Gearing Specifications 7-29
Table 7-8. MS-6 Generator Specifications 7-31

Chapter 8

Table 8-1. Specific Gearing Costs for Planetary Designs 8-3
Table 8-2. Specific Gearing Costs for Parallel-shaft Designs 8-4
Table 8-3. Specific Costs of Structural Components 8-8
Table 8-4. Balance of Turbine Costs 8-9
Table 8-5. The 1.5-MW Total Drivetrain Efficiencies 8-12
Table 8-6. The 1.5-MW Gearbox Efficiencies 8-15

Chapter 9

Table 9-1. Capital Costs: 1.5-MW Configurations 9-1
Table 9-2. Capital costs: 3-MW Configurations 9-2
Table 9-3. Relative Cost Comparison: 1.5-MW Configurations 9-4
Table 9-4. Relative Cost Comparison: 3-MW Configurations 9-4
Table 9-5. Summary of Operation and Maintenance Costs 9-5
Table 9-6. Annual Energy Production: 1.5-MW Configurations 9-8
Table 9-7. Annual Energy Production: 3-MW Configurations 9-8
Table 9-8. COE Summary: 1.5-MW Configurations 9-8
Table 9-9. COE Summary: 3-MW Configurations 9-9
Table 9-10. Relative COE: 1.5-MW Configurations 9-10
Table 9-11. Relative COE: 3-MW Configurations 9-10
Table 9-12. COE Sensitivity 9-12

1 Introduction

The National Renewable Energy Laboratory (NREL) Wind Partnerships for Advanced Component Technologies (WindPACT) project seeks to advance wind turbine technology by exploring innovative concepts in drivetrain design. A team led by Northern Power Systems (Northern) of Waitsfield, Vermont, was chosen to perform this work. Conducted under subcontract YCX-1-30209-02, project objectives are to identify, design, and test a megawatt-scale drivetrain with the lowest overall life cycle cost. The project comprises three phases:

- Preliminary study of alternative drivetrain designs (Phase I)
- Detailed design development (Phase II)
- Proof of concept fabrication and test (Phase III).

This report summarizes the results of the preliminary design study (Phase I).

1.1 Project Team

The project team is composed of Northern (prime subcontractor), subcontractors, and consultants. The following sections identify the principal participants and their major roles.

- Prime subcontractor and major subcontractors:

Northern Power Systems, Waitsfield, Vermont

Tasks: Project management; subcontract administration, turbine systems design; power electronics design; modeling and integration

Principal contributors: Northern's team is led by Mr. Jonathan Lynch, principle investigator. Mr. Lynch has responsibility for technical performance under the contract. The lead engineer is Mr. Garrett Bywaters. Project management under Phase I was provided by Mr. Gary Norton and Mr. Peter Mattila. Other contributors include Dr. Dan Costin, Mr. Chris Bevington, Mr. Bill Danforth, Mr. Steve Hoskins, Dr. Vinod John, Mr. Jeff Petter, Mr. Rob Rolland, and Mr. Jesse Stowell.

TIAX (formerly Arthur D. Little, Inc.), Cambridge, Massachusetts

Tasks: O&M analysis and modeling, technology assessment, market analysis

Principal contributors: Mr. David Hablanian, Dr. Allan Chertok, Mr. Michael Morris, and Ms. Lisa Frantzis

General Dynamics Electric Boat, Groton, Connecticut

Tasks: Generator design and costing, modeling and integration, power electronics support

Principal contributors: Mr. Scott Forney, Mr. Jack Kelley, Mr. Spyro Pappas, Mr. Mike Salata, Mr. Greg Kudrick, Mr. Jack Chapman, and Mr. Al Franco

Gear Consulting Services of Cincinnati (formerly Cincinnati Gear), Cincinnati, Ohio

Tasks: Gearing design and costing

Principal contributors: Mr. Octave Labath and Mr. Dennis Richter

- Phase-I consultants:

Adept Engineering, Glen Cove, New York

Tasks: System layout and structural design

Principal contributor: Mr. Matthew Hayduk

Catamount Engineering, Waitsfield, Vermont

Tasks: System layout and structural design

Principal contributor: Mr. Timothy Cosentino

Comprehensive Power, Shrewsbury, Massachusetts

Tasks: Generator cost modeling

Principal contributor: Dr. Frank Jones

Windward Engineering, Salt Lake City, Utah

Tasks: Turbine loads modeling

Principal contributor: Dr. Craig Hansen

The Timken Company, FAG Bearings, LM GlasFiber, EUROS GmbH, and other vendors supplied component quotes for costing.

1.2 Drivetrain Configurations

For the drivetrain configuration study, we classified the proposed design alternatives as follows:

- *Baseline configuration.* The baseline drivetrain, so-called because of its widespread commercial installed base, employs a multiple-stage hybrid gear speed increaser with a planetary low-speed front-end followed by two helical parallel shaft stages to achieve a nominal output speed suitable for a six-pole (1200-rpm) wound rotor induction generator. The baseline configuration uses a partial rating power converter on the generator rotor circuit to allow variable speed operation.
- *Direct-drive configuration.* Direct-drive generators offer significant potential because they eliminate the gear-speed increaser, a well-known source of maintenance cost and significant accumulated fatigue torque loading. The permanent magnet (PM) synchronous direct-drive configuration employs PM field poles in a radial field internal configuration. The PM design is preferred because it offers simplicity and potential reduction in size, weight, and cost compared with a wound-field design. The direct-drive configuration

requires a full rating power converter on the generator output to allow variable speed operation.

- *Gear-driven, low-speed configuration.* A single-stage gearbox coupled with a low- to moderate-speed generator combines the benefits of both gearing and specialty generators. Single-stage gearing decreases the size of the generator and can use either a wound rotor synchronous generator or a permanent magnet generator. For our drivetrain study, we chose the single-stage PM generator for its performance advantages and relative simplicity compared with the wound rotor generator. The gear-driven, low speed configuration requires a full rating power converter on the generator output to allow variable speed operation.
- *Multiple-path configuration*. Multiple-path drivetrain configurations can range from multiple, low-speed paths where multiple generators are driven off a single-stage gear path, to multiple higher-speed generators driven by multiple, separate gear paths. The number of generators can range from two to twelve. After evaluating many options, we found that a gear-driven, medium-speed, six-generator configuration using PM generators was the most promising of the multiple-path design alternatives. The multiple-path configuration requires a full rating power converter on the generator output to allow variable speed operation.

1.3 Turbine Sizes

The original NREL subcontract required examining the drivetrain configurations described in the preceding section over sizes ranging from 1 MW to 10 MW. NREL subsequently modified this requirement to focus on drivetrains at the 1.5-MW and 3.0-MW levels.

1.4 Project Approach

To identify an optimized megawatt-scale drivetrain configuration for development in Phases II and III, the Northern project team performed the following tasks:

1. Evaluated drivetrain options identified in the statement of work (SOW).
2. Assessed drivetrain technology and trends.
3. Wrote drivetrain design specifications.
4. Developed preliminary drivetrain designs.
5. Conducted Operation and Maintenance (O&M) analysis on the drivetrain designs
6. Compared cost of energy (COE) among the drivetrain designs.

During Phase I, we developed engineering tools and models for loads processing and scaling; structural analysis; baseline costing; PM generator design and costing; O&M and COE to accomplish our tasks. On the basis of our evaluation, the Northern project team recommended a drivetrain design for development and testing in Phases II and III.

2 WindPACT Drivetrain Study Parameters

To guide drivetrain analysis and design, NREL defined design requirements and prospective wind turbine site criteria to establish the system design, the loading envelope accommodated by the drivetrain, and a common basis for estimating the cost of energy.

2.1 Drivetrain Design Criteria

Following are the design criteria established by NREL:

- System specifications:
  - Variable speed operation with maximum coefficient of power (Cp) = 0.5
  - Maximum tip speed = 85 m/s
  - Turbine hub height = 1.3 × rotor diameter
  - Rated wind speed = 1.5 × hub height (annual average)
  - Cut-out wind speed = 3.5 × hub height (annual average).
- Design wind class:
  - Wind Turbine Generator System (WTGS) Class II.
- Performance wind definition for evaluating the design:
  - Air density = 1.225 kg/m^3 (sea level)
  - 10-m wind speed = 5.8 m/s (annual average)
  - Rayleigh distribution
  - Power law = 0.143.

In addition, the following system design criteria were considered:

- Market relevance
- Simplicity of design
- Ease of assembly
- Reliability
- Serviceability
- Shipping.

2.2 Drivetrain Matrix

For the drivetrain configuration study, we divided the proposed design alternatives into four subsets (Table 2-1). Each configuration was brought to the preliminary design stage and evaluated according to the metrics and methodology described below. Section 3 describes our evaluation methodology in detail.

Table 2-1. Drivetrain Configuration Matrix

Concept	Definition	Geartrain	Generator configuration	Characteristics
1	Baseline	Multiple stage	I	Multiple stage planetary/helical or helical
2	Direct drive	None	II(a) and II(b)	No gearbox; very slow generator
3	Low speed	Single stage	III(a) and III(b)	Planetary gear speed increaser
4(a)	Multiple path	Multiple stage	I	Multiple options—two or more generators
4(b)	Multiple path	Single stage	III(a) and III(b)	Multiple options—two or more generators

Generator	Definition	Speed	Type and options	Characteristics
I	Baseline	1200 rpm	Wound rotor induction	Off the shelf
II(a)	Low speed	20 rpm	Wound rotor synchronous	New design
II(b)	Low speed	20 rpm	PM synchronous	New design
III(a)	Medium speed	100 rpm	Wound rotor synchronous	New design
III(b)	Medium speed	100 rpm	PM synchronous	New design

Abbreviations: PM = permanent magnet; rpm = rotations per minute

We assessed drivetrain configurations as point designs at the 1.5- and 3-MW power levels. Our team carefully examined the point designs and drew conclusions about the relative merits of each component-system configuration.

2.2.1 Concept 1: Baseline Configuration

So-called because it has been the dominant solution installed by wind-turbine manufacturers worldwide, the baseline generator employs a multiple-stage gear speed increaser with a planetary low-speed front end followed by one or two helical parallel shaft stages to achieve a nominal output speed suitable for a six-pole (1200-rpm) wound rotor induction generator. Variable-frequency, variable-voltage rotor power is converted to utility frequency and voltage by a converter unit at the base of the tower.

2.2.2 Concept 2: Direct-Drive Configuration

Direct-drive configurations offer significant potential for the wind industry because they eliminate the gearbox. The direct-drive configuration is already establishing a presence in the marketplace (Enercon, Lagerwey, and Northern). The two types of direct-drive generators are the (1) wound rotor synchronous generator and (2) PM rotor synchronous generator. Early in our evaluation of drivetrain configurations, both Northern and General Dynamics Electric Boat (GDEB) performed comparative studies of the two direct-drive generator options. In both cases, the permanent magnet topology was superior. Therefore, we considered only the PM synchronous direct-drive design.

The PM synchronous direct-drive configuration selected by the project team employs PM field poles in a radial field internal configuration. Only radial field designs were analyzed in detail because they are superior to axial field designs in terms of voltage induction and are commonly

used in electrical machinery. We analyzed a number of PM direct-drive tower-top configurations (described later in this report).

2.2.3 Concept 3: Gear-Driven, Medium-Speed Configuration

The concept of a single-stage gearbox coupled with a low- to moderate-speed generator has gained attention because it combines the benefits of a higher (than direct drive) generator speed and a lower number of gear parts. The single-stage gearbox configuration can use either a wound rotor synchronous generator or a PM generator. For our drivetrain study, we chose the single-stage PM generator for its cost and performance advantages and relative simplicity compared with the wound rotor configuration.

2.2.4 Concept 4: Multiple-Path Configuration

The options for multiple-path drivetrain configurations are many, ranging from multiple, low-speed paths where multiple generators are driven off a single-stage gear path, to multiple higher-speed generators driven by separate, multiple gear paths. The number of generators could range from two to possibly as many as twelve. We evaluated many of these options. Initially we considered both specially made wound rotor and PM-synchronous generators. However, the most promising multiple-path drivetrain configuration proved to be a gear-driven, medium-speed, six-generator configuration using PM generators.

The arrangement allows a number of pinion meshes with a common bull gear to share the total gear load, much like a planetary speed increaser. However, this advantage comes at the expense of more parts and the associated reliability and maintenance concerns. We considered these factors when evaluating this concept.

3 Approach

The goal in Phase I of the WindPACT project was to identify an optimized megawatt-scale drivetrain configuration for development in Phases II and III. This section describes our approach.

Upon establishing drivetrain configuration options based on the SOW, the Northern team conducted a comprehensive assessment of drivetrain technology (Section 4). On the basis of our assessment, we narrowed our configuration options and selected the most promising component technologies for each option. To find the best configuration, we integrated the component technologies into our drivetrain designs and optimized the designs by performing trade-off studies and sensitivity analyses.

The drive components were then integrated into a complete structural design. Several mechanical layouts were developed for each drivetrain type. Structural analyses were performed using finite element analysis (FEA) techniques with loads calculated using dynamic simulation models. After integrating the balance of turbine components (rotor, yaw drives, tower, controller, etc.), we determined the cost of each design.

The same approach was employed for the 1.5-MW and 3-MW machines. We did not use scaling laws to "project" the design to larger sizes; rather, we developed actual designs. We believe this approach estimates the probable costs of larger machines more accurately than does scaling smaller designs.

3.1 Design Methodology

3.1.1 Gearbox

The single-output, medium-speed gearing designs were based on compound planetary helical technology, the multiple-output designs were based on parallel helical technology, and the high-speed (baseline) gearing was based on compound helical initial stages and a helical parallel output stage. The rational for choosing these designs is discussed in Section 4.

Gear and bearing life requirements used in this study were based on limits set in the latest draft of the *Standard for Design and Specification of Gearboxes for Wind Turbine Generator Systems* (AGMA/AWEA 2002).

Gearing was designed to a minimum of 175,000 hours of life per American Gear Manufacturers Association (AGMA) 2001-C95 using duty cycles supplied by Northern. The bearing lives were calculated using the basic rating life L10, and minimum lives were held to limits set forth in Table 5-1 of the American Wind Energy Association (AWEA) specification.

3.1.2 Generator

The generator design is based on GDEB's embedded permanent magnet technology. GDEB produced conceptual generator designs for all configurations. Its design process included defining generator parameters and developing conceptual designs (electrical and magnetic). Design analysis was performed using GDEB-proprietary and commercial software. Appendix A describes the conceptual design process in detail.

A parametric generator design and costing tool was developed to determine cost trends and to select design points for the GDEB effort. Power, speed, and life requirements were set by Northern.

3.1.3 Power Electronics

Originally, a standard, off-the-shelf motor regenerative drive was targeted as the power converter for the wind-turbine generator. However, limited control flexibility, which affects the cost of the PM generator, resulted in a Northern-built power converter because drives and controls are sold as a package. While the hardware of the Northern power converter is identical to that of a standard, commercial PM motor drive, its control system has been designed by Northern to provide greater flexibility.

3.1.4 System and Structural Design

Rotor

The SOW specifies a three-bladed, pitch-controlled, rigid rotor. A standard design was implemented using currently available blade designs, electrically actuated pitch drives, an industry-standard pitch-control system, and a spherical cast-iron hub. Windward Engineering developed and tuned the pitch controller for the 1.5-MW rotor. The same controller kernel was used for the 3-MW turbine. Northern tuned the control parameters to achieve the desired operational characteristics.

Tower

The SOW largely dictates the tower design. Tubular steel towers with the specified hub height were designed for each turbine.

Loads

We used the Fatigue, Aerodynamics, Structures, and Turbulence (FAST) program to calculate turbine loads under normal turbulence and extreme wind cases. Loads were calculated according to IEC (1999) and Germanischer Lloyd (1999) standards and processed to yield the loads most useful for designing each component (bearings, gears, etc.). Windward Engineering developed the 1.5-MW baseline turbine model, and Northern developed the 3-MW model. Windward also developed a program to create multidimensional histograms useful for bearing design.

Structural Design and Analysis

An FEA of major load-carrying components was conducted and the components were dimensioned according to Germanischer Lloyd (1999) standards. Reserve factors were calculated for both extreme loads and fatigue loads.

3.1.5 Drivetrain Configurations

For each drivetrain configuration, the Northern team investigated several different gearing options and many different mechanical layouts—integrated, modular, single-bearing, multiple bearings—and completed preliminary costing. The best drivetrain configuration in each category was selected, and preliminary designs were then executed.

Baseline

In September 2001, Northern representatives attended the New Energy exhibit and conference in Husum, Germany. We reviewed and examined many "off-the-shelf" components for the 1.5-MW baseline turbine, including gearboxes, generators, pitch drives, yaw drives, and main bearings. We observed many megawatt-class turbines, which presented different conceptual designs for baseline-style turbines. One of these was the WinWind 1-MW (this report's MS-1–style) turbine. The prudence of "copying" a modern baseline design and costing the whole 1.5-MW turbine to "reality check" our design and pricing was recognized. Standard components were used wherever possible, and custom component designs were developed when required. Quotes were obtained for the majority of the baseline components and compared with industry averages. This exercise provided a solid foundation from which the various options were priced.

Direct-Drive

The primary design drivers for the direct-drive machine are generator diameter, cooling method, and structural configuration. To determine the maximum diameter, we investigated transportation constraints in the United States and Europe. We also conducted studies to compare cost differences between air-cooled and liquid-cooled designs. Several bearing configurations were developed, including single-bearing and two-bearing designs. This report refers to the direct-drive configuration with a PM generator as the permanent-magnet direct-drive design (PMDD).

Single Stage/Single Output

The Northern team investigated both single-stage epicyclic and compound planetary gearing in spur gear and helical tooth forms. Both modular and integrated designs were pursued, and for integrated designs, two different carrier-bearing configurations were investigated. This report refers to the resulting design as the medium-speed, single-output or MS-1 configuration.

Single Stage/Multiple Output

The study of this generic drive type began with comparing drive costs of 2-, 3-, 4-, 6-, and 12-output generator designs. We selected reasonable gear ratios, set generator size constraints, and completed gearing and generator designs and costing of major components. This preliminary investigation led to the selection of the six-output generator design for further development. To optimize the six-output design, we developed designs at several gear ratios and compared costs. A parametric generator model allowed us to quickly determine the best combination of gear ratio and generator speed and size. The design was optimized in subsequent iterations. This report refers to the configuration as the medium-speed, six-output or MS-6 design.

Multiple Stage/Multiple Output (MS/MO)

We immediately discarded the MS/MO design for its complexity and high part count, among other factors.

3.2 Analysis Methodology

Many metrics are available for determining which drivetrain best meets the project goals. There are also subjective considerations in the choice of a particular drivetrain. These metrics and subjective considerations include first cost, COE, energy production, reliability, and technological appeal. For this study, our primary evaluation metrics were first cost and COE.

Under the WindPACT SOW, the COE calculation attempts to quantify the overall life cycle costs by applying the design to a 200-MW wind farm based on the chosen technology. Because some developers buy turbines based on first cost and others based on COE calculations, we present both.

The development of first cost and COE is described in detail in Section 8. In summary, the process is as follows:

1. Develop the capital costs of turbine components. (Costs are based on quotes for both standard and custom components)
2. Include the costs associated with transportation and assembly of components
3. Develop a sale price based on an assumed profit margin
4. Determine the annual energy production based on the mechanical power curve and drive efficiencies
5. Determine the annual operation and maintenance costs
6. Determine the COE as follows:

$$COE = (FCR \times ICC + AOM) / AEP$$

where

FCR = fixed charge rate

ICC = initial capital cost

AOM = annual operation and maintenance

AEP = annual energy production.

4 Technology Assessment

To ensure the technical success and market relevance of the WindPACT project, we conducted a comprehensive assessment of drivetrain technology.

The project team:

- Examined commercial wind turbines
- Reviewed relevant information (including previous drivetrain studies) in technical journals, trade publications, and reports
- Examined industry trends
- Studied advances in drivetrain component reliability
- Examined drivetrain technology options for gearboxes, generators, and power converters.

4.1 Commercial Wind Turbines

Our technology assessment first focused on standard commercial wind turbines. We studied the following types of turbine designs:

- Industry-standard, gear-driven, doubly fed induction generator (DFIG)
- Single-stage gearbox with PM generator
- Direct drive with PM and wound rotor generators.

Figure 4-1 shows an example of each drivetrain configuration. The multiple-path drivetrain configuration is not commercially available.

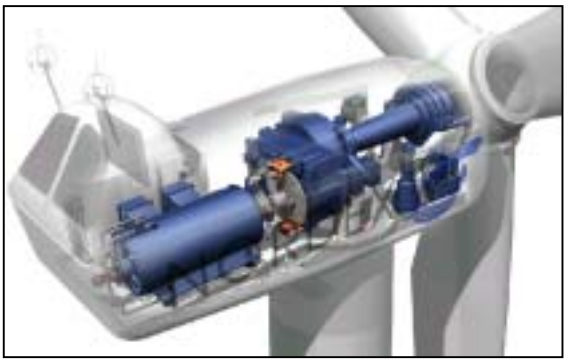

Standard gear-driven DFIG (Nordex)

Single stage (MultiBrid)

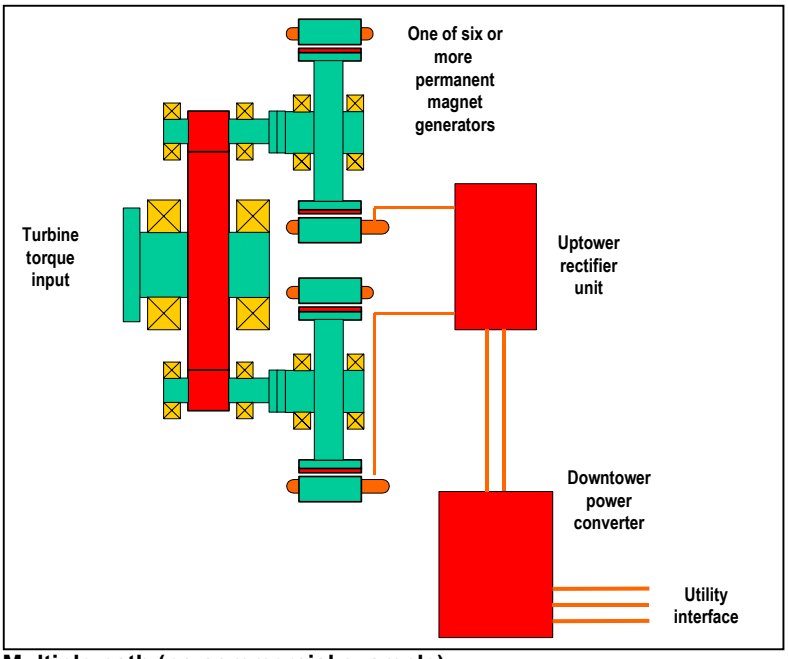

Multiple path (no commercial example)

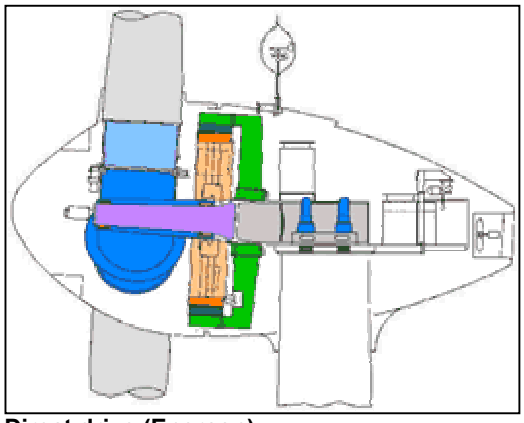

Direct drive (Enercon)

Figure 4-1. Drivetrain configurations.

Most installed commercial wind turbines are standard, gear-driven, DFIG configurations. However, a number of nonstandard wind turbine configurations are gaining prevalence in the industry. The commercial success of German wind turbine supplier Enercon, which captured 15.2% of the world market in 2001 (ranked second worldwide) with direct-drive wind turbine solutions, proves the commercial viability of nonstandard drivetrain configurations. The success of Enercon and the choice of direct-drive technology for product development by other industry players, such as Jeumont, Lagerwey, Mitsubishi and M. Torres, are solid proof that direct-drive designs can be the basis for megawatt-class turbines that compete successfully with gear-driven models. Other nonstandard drivetrain configurations, such as WinWind (based on MultiBrid technology), are also considerations. Table 4-1 shows a selection of nonstandard turbine drivetrains in use or under development.

According to the *WindStats Newsletter* (Autumn 2002), "the PMG [permanent magnet generator] has become a first preference for new manufacturers eager to make a direct drive market entry" (Table 4-2).

Tables 4-3 and 4-4 show specifications and prices of commercially available wind turbines rated at 1 MW and larger.

Table 4-1. Drivetrain Configurations of Nonstandard Commercial Turbines

Manufacturer	Rated power (kW)	Drivetrain type
Lagerwey	750	Direct-drive, wound rotor
Jeumont	750	Direct-drive, permanent magnet, axial flux
Enercon	850; 1500	Direct-drive, wound rotor
Mitsubishi	2000	Direct-drive, permanent magnet

Abbreviations: kW = kilowatt

Table 4-2. "High Potential" Direct-Drive Projects

Model	Capacity (MW)	Generator type	Technology	Status
Lagerwey LW58	0.75	External excitation	VS/pitch	Prototype (2002)
Vensys Energiesysteme	1.2	Permanent magnet	VS/pitch	NA
M. Torres TWT1500	1.5	Ext. excitation	VS/pitch	Prototype (2002)
Jeumont J70/J77	1.5	Permanent magnet	VS/pitch	Prototype (2003)
NPS NW1.5/70	1.5	Permanent magnet	VS/pitch	NA
Lagerwey LW72	2.0	Permanent magnet	VS/pitch	Prototype (2002)
ScanWind	3.0	Permanent magnet	VS/pitch	NA

Abbreviations: MW = megawatt; NA = not applicable; VS = variable speed
Source: WindStats Newsletter (Autumn 2002)

Table 4-3. Commercial Wind Turbine Specifications (Rated Power ≥1 MW)

Manufacturer	Model	Rated power (kW)	Rotor diameter (m)	Hub height (m)	Drivetrain type	Power regulation
Enercon	E-112	4500	112.8	124	Direct drive	Pitch
GE Wind	3.2s	3200	104.0	110	Multiple-stage gearbox	Pitch
Vestas	V-90	3000	90.0	100	Multiple-stage gearbox	Pitch
Nordex	N-80	2500	80.0	60	Multiple-stage gearbox	Pitch
NEG Micon	NM2000/72	2000	72.0	64	Multiple-stage gearbox	Pitch
Vestas	V80/2.0 MW	2000	80.0	60	Multiple-stage gearbox	Pitch
DeWind	D8/80-2MW	2000	80.0	80	Multiple-stage gearbox	Pitch
Enercon	E-66/ 18.7-3	1800	60.0	65	Direct drive	Pitch
Enercon	E-66/ 18.7-2	1500	66.0	65	Direct drive	Pitch
Enercon	E-66/ 18.7-1	1800	70.0	65	Direct drive	Pitch
Vestas	1.8MW	1800	80.0	60	Multiple-stage gearbox	Pitch
Vestas	1.65MW	1650	66.0	65	Multiple-stage gearbox	Pitch
NEG Micon	NM1500C/72	1500	72.0	64	Multiple-stage gearbox	Active stall
GE Wind	1.5s	1500	70.5	65	Multiple-stage gearbox	Pitch
GE Wind	1.5sL	1500	77.0	80	Multiple-stage gearbox	Pitch
Repower	MD 70	1500	70.0	65	Multiple-stage gearbox	Pitch
Repower	MD 77	1500	77.0	62	Multiple-stage gearbox	Pitch
Lagerwey	LW72/1500	1500	72.0	65	Direct drive	Pitch
NEG Micon	NM1500C/64	1500	64.0	68	Multiple-stage gearbox	Stall
NEG Micon	NM82/1500	1500	82.0	80	Multiple-stage gearbox	Active stall
Nordex	N-62	1300	62.0	60	Multiple-stage gearbox	Stall
Bonus Energy	1.3 MW/62	1300	62.0	45	Multiple-stage gearbox	Active stall
DeWind	D6/ 62-1.25 MW, II	1250	62.0	65	Multiple-stage gearbox	Pitch
DeWind	D6/64-1.25MW, III	1250	64.0	65	Multiple-stage gearbox	Pitch
Enercon	E-58	1000	58.0	65	Direct drive	Pitch
DeWind	D6/ 62-1MW, III	1000	62.0	65	Multiple-stage gearbox	Pitch
WinWind	WWD	1000	56.0	56	Single-stage gearbox	Pitch

Abbreviations: m = meter; kW = kilowatt; MW = megawatt
Source: Wind Turbine Market 2001 Special Report, Germany (2001)

Table 4-4. Commercial Wind Turbine Prices (Rated Power ≥1 MW)

Manufacturer	Model	Rated power (kW)	Price (US$)	Price/kW (US$)
Enercon	E-112	4500	NA	NA
GE Wind	3.2s	3200	—	NA
Vestas	V-90	3000	NA	NA
Nordex	N-80	2500	$1,586,768	$635
NEG Micon	NM2000/72	2000	$1,533,876	$767
Vestas	V80/2.0 MW	2000	NA	NA
DeWind	D8/80-2MW	2000	NA	NA
Enercon	E-66/ 18.7-3	1800	$1,411,708	$784
Enercon	E-66/ 18.7-1	1800	$1,411,708	$784
Vestas	1.8MW	1800	$1,476,728	$820
Vestas	1.65MW	1650	NA	NA
NEG Micon	NM1500C/72	1500	$1,278,229	$852
GE Wind	1.5s	1500	$1,344,345	$896
GE Wind	1.5sL	1500	$1,410,460	$940
Repower	MD 70	1500	$1,181,260	$788
Repower	MD 77	1500	$1,234,153	$823
Lagerwey	LW72/1500	1500	NA	NA
Enercon	E-66/ 18.7-2	1500	$1,411,708	$941
NEG Micon	NM1500C/64	1500	$1,035,807	$691
NEG Micon	NM82/1500	1500	NA	NA
Nordex	N-62	1300	$956,468	$736
Bonus Energy	1.3 MW/62	1300	$1,035,181	$796
DeWind	D6/ 62-1.25 MW, II	1250	$999,000	$799
DeWind	D6/64-1.25MW, III	1250	$1,139,304	$911
Enercon	E-58	1000	NA	NA
DeWind	D6/ 62-1MW, III	1000	$994,560	$995
WinWind	WWD	1000	$1,060,000	$1,060

Abbreviations: kW = kilowatt; NA = not available; US = United States
Sources: Wind Turbine Market 2001 Special Report, Germany (2001); Misc. quotes

Table 4-5 shows weights of commercially available wind turbines 1 MW and larger. We used these weights to verify that our preliminary designs were comparable to commercially available turbines.

Table 4-5. Commercial Wind Turbine Weights (Rated Power ≥1 MW)

Manufacturer	Model	Rated power (kW)	Total rotor weight (kg)	Nacelle weight excluding rotor (kg)	Nacelle weight including rotor (kg)
Enercon	E-112	4500	—	—	500000
GE Wind	3.2s	3200	—	—	—
Vestas	V-90	3000	—	—	—
Nordex	N-80	2500	48000	85000	133000
NEG Micon	NM2000/72	2000	40000	82000	122000
Vestas	V80/2.0 MW	2000	37200	61200	98400
DeWind	D8/80-2MW	2000	—	—	—
Enercon	E-66/ 18.7-3	1800	31700	101000	132700
Enercon	E-66/ 18.7-1	1800	31700	101000	132700
Vestas	1.8MW	1800	—	—	—
Vestas	1.65MW	1650	—	—	—
NEG Micon	NM1500C/72	1500	31400	44000	75400
GE Wind	1.5s	1500	28000	49000	77000
GE Wind	1.5sL	1500	31000	49000	80000
Repower	MD 70	1500	33000	56000	89000
Repower	MD 77	1500	35000	56000	91000
Lagerwey	LW72/1500	1500	29000	60000	89000
Enercon	E-66/ 18.7-2	1500	31700	101000	132700
NEG Micon	NM1500C/64	1500	—	43000	—
NEG Micon	NM82/1500	1500	—	—	—
Nordex	N-62	1300	21500	51400	72900
Bonus Energy	1.3 MW/62	1300	34400	46500	80900
DeWind	D6/ 62-1.25 MW, II	1250	24500	44000	—
DeWind	D6/64-1.25MW, III	1250	24500	44000	—
Enercon	E-58	1000	33000	—	88000
DeWind	D6/ 62-1MW, III	1000	24500	44000	68500
WinWind	WWD	1000	17000	34000	51000

Abbreviations: kg = kilogram; kW = kilowatt
Source: Wind Turbine Market 2001 Special Report, Germany (2001)

Figure 4-2 depicts nacelle weight (including rotor) versus rated power of commercially available wind turbines.

4.2 Previous Drivetrain Studies

Our investigation of drivetrain options benefited from reports in technical and trade journals. We reviewed previous and current drivetrain studies and technological advances in drivetrain materials and components. Following are the major findings from our review of drivetrain studies:

- Most direct-drive assessments focused on innovative measures to reduce size, weight, and cost of generator.
- Direct-drive generators must attain a very high torque capacity (mass-specific) to compete with high-speed squirrel cage or doubly fed wound rotor induction generators.
- Bohmeke and Boldt reported "a clear advantage for the gear-driven configuration" and concluded that direct-drive configurations can compete economically only if very high failure rates are assumed for geared drive configurations.

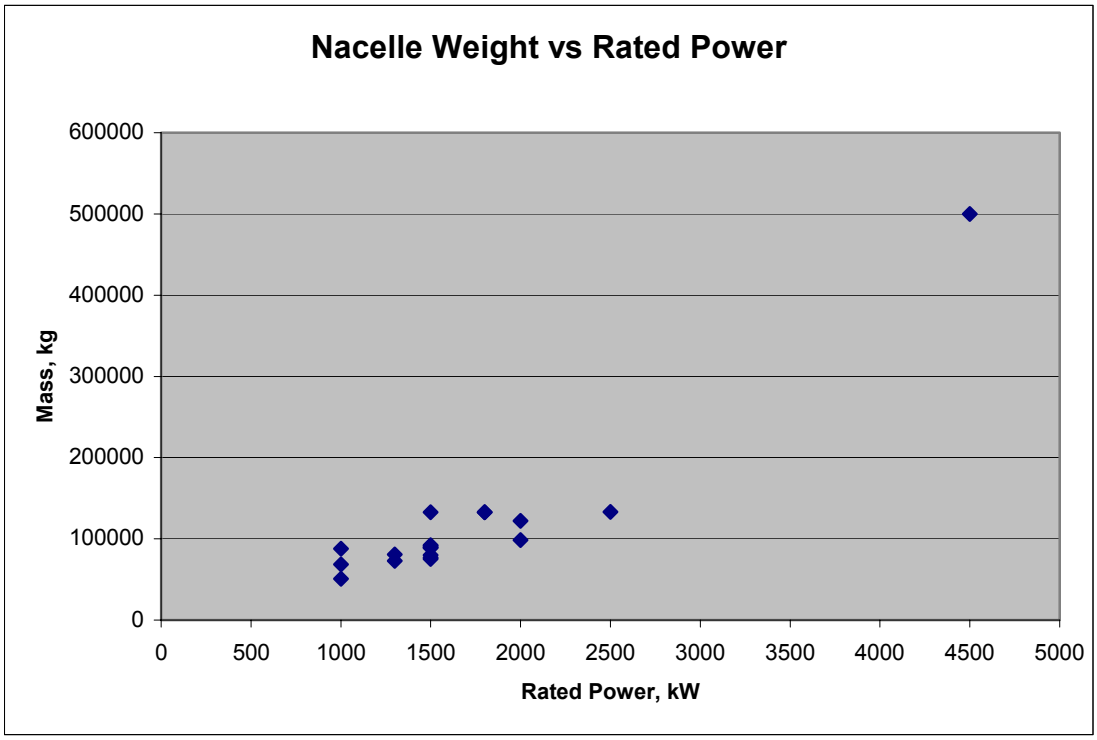

Figure 4-2. Nacelle weight (including rotor) versus rated power of commercial wind turbines.

- Grauers (1994) analyzed annual average efficiency as a function of wind distribution and found a small efficiency advantage for direct-drive configurations.
- Assessing bearing overload, Rahlf and colleagues (1998) noted that the trend toward weight-optimized construction presents the risk of designers sizing structures to accommodate stresses while paying insufficient attention to providing adequate stiffness. As a consequence, deflections of structures, such as hubs and gearboxes, may induce premature failure of bearings and gears.

Previous drivetrain studies are cited in sections throughout this report. Also see the TIAX technology assessment reports (Appendices E and F).

4.3 Industry Trends

The trend toward alternative drivetrain configurations, and more specifically direct-drive configurations, is evidenced through predictions in wind industry market reports, research papers, and trade journals:

> "2005 technology: variable speed, direct drive permanent magnet generator . . ." (*Renewable Energy Technology Characterizations*, Electric Power Research Institute and U.S. Department of Energy, 1997)

> "While it would appear optimistic to expect large mass or cost savings in large wind turbines purely by the introduction of a direct drive system, it is likely that in a fully integrated design…the simplification of design, provision of wide range variable speed and elimination of gearbox maintenance will all favour the continuing development of direct drive systems" (*Wind Energy—The Facts*, Directorate-General of Energy, European Commission and EWEA, 1998)

> "Another trend is the increased focus on direct drive machines, even though it is not yet reflected in commercial sales other than those from Enercon and Lagerwey" (*International Wind Energy Development: World Market Update 2000; Forecast 2001–2005*, BTM Consult, 2001)

> "Magnetic materials will become more popular, especially in direct-drive generator technology that will replace traditional step-up gearboxes in some larger machines" (*Wind Turbine: Materials and Manufacturing Fact Sheet*, Princeton Energy Resources International for the U.S. Department of Energy, 2001)

> "Direct drive has become a well-established concept—established enough that a growing number of companies are working on systems of their own . . . . Both [ABB and Siemens] envisage considerable market growth for direct drive systems in the future . . ." (*WindStats Newsletter*, Autumn 2002).

Each month, editorials in leading industry trade journals tout the bright future of nonstandard turbine designs, particularly direct-drive technology. Historic barriers to new technology in the wind industry are easing as acceptance of wind power grows. The wind industry has blossomed into a business of more than US$6 billion per year.

Turbine subsystem designs, including controls, yaw drives, blade-pitching systems, gearboxes, generators, and blades are no longer proprietary. Increasingly, turbine manufacturers are integrators because they can introduce turbines with innovative drivetrains without "reinventing"

the balance of the system. Component suppliers can sell drivetrain products without becoming turbine manufacturers. In short, many turbine components are becoming commodities.

4.3.1 Market Survey

Although our research confirmed the trend toward alternative drivetrain configurations, we sought further verification by surveying wind farm developers, operators, and major international turbine suppliers. Conducted for the WindPACT project by TIAX in June 2001, the survey focused on the following:

- Industry perception of direct-drive versus gear-driven turbines
- Gearbox maintenance requirements and costs
- Primary factors affecting turbine procurement choices.

Following are key findings of the survey:

- Direct variable-speed drive wind turbines likely will see increased market penetration over the next few years (Figure 4-3).
- To achieve greater market penetration, minor hurdles must be overcome (Figure 4-4).
- Cost, reliability, and a proven track record were the three most important purchasing criteria among developers and suppliers (Table 4-6).

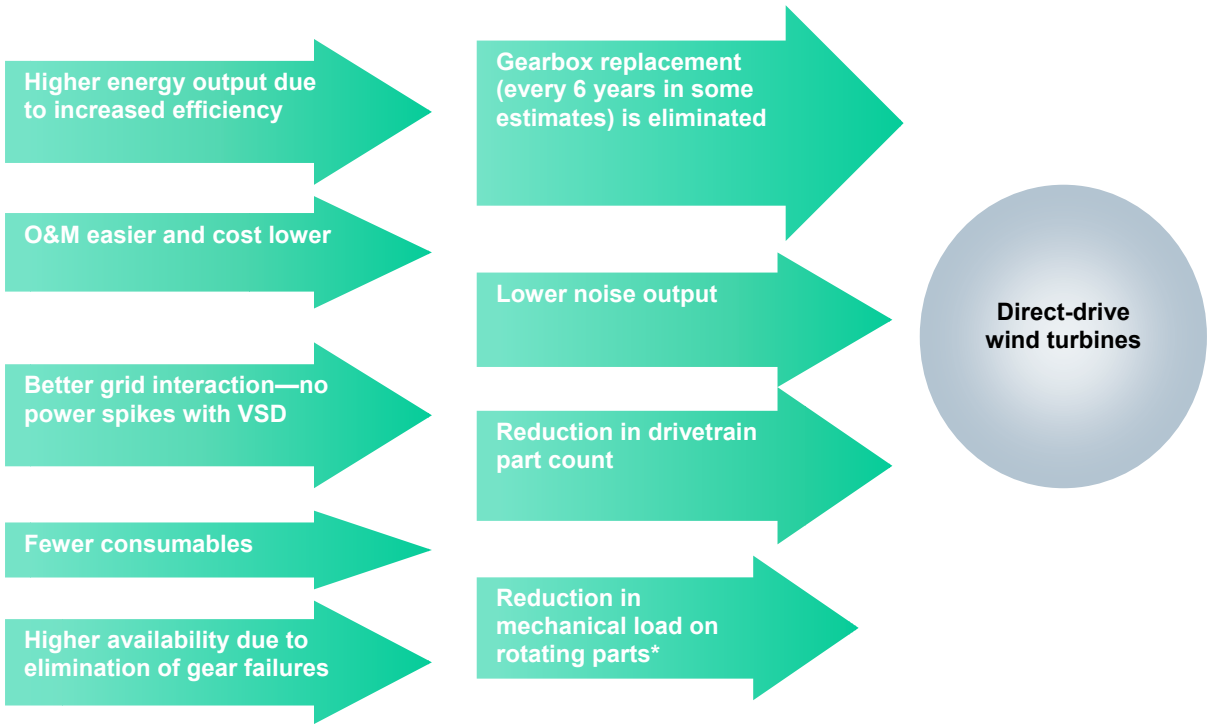

*Compared with constant-speed, gear-driven wind turbines.

Figure 4-3. Advantages of direct-drive turbines.

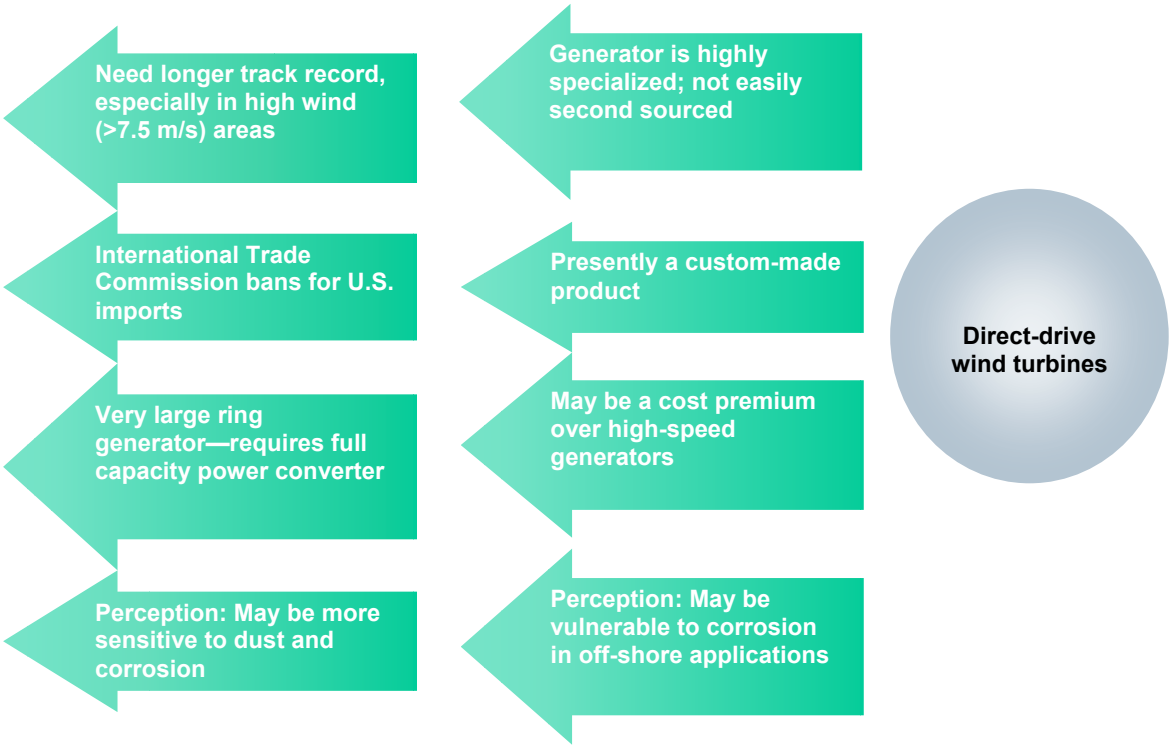

Figure 4-4. Disadvantages of direct-drive turbines.

Table 4-6. Purchasing Criteria*

	Cost	Reliability	Warranty	Company financial strength	Field experience	Wind turbine power curve relative to site	Cheap financing
Developers							
FPL Energy	●	◓					
Sea West	●		●	◓			
enXco	●	●			◓	○	
RES					●	◓	
York General	●					●	
Suppliers							
NEG Micron	●	●	○	○	●	◓	◓
Nordex	●				●	◓	
Bonus Energy		●			●		
ABB	●	●					

Less important ○ ⟶ ● More important

- O&M costs ranged from US$6,500 to US$9,000 per turbine during warranty. After warranty, costs ranged from US$10,000 to US$20,000 per turbine (Table 4-7).

Developers and suppliers were questioned about wind turbine (O&M) costs. Most commercial wind turbine manufacturers sell a service plan to cover turbine maintenance for the first 5 years. According to respondents, after the first 5 years (i.e., post-warranty), O&M costs generally increase.

4.3.2 Technology Trends

Rare-Earth Magnets

Historically, the high cost and limited availability of high-strength, rare-earth, permanent magnets inhibited the commercial viability of motors and generators based on PM design topologies. Over the last decade, the cost of these magnets has dropped significantly, in part because of their use in motors of computer hard drives and other electronic devices. Rare-earth magnets, such as Neodymium Iron Boron (NdFeB), now have the combination of high-energy density and relatively low cost based on the availability of constituent ores. Figure 4-5 depicts the historical trends of rare-earth magnet production and pricing in Japan, which are indicative of the worldwide trends. The currency shown is the Japanese yen.

For the WindPACT project, we solicited quotes from magnet vendors that reflect shorter-term competitive prices, which further supports the use of these materials in commercial electromagnetic machinery. Because magnets constitute a major cost in a large-scale PM generator, even minor reductions in magnet costs can impact the overall cost significantly.

Figure 4-6 shows quoted prices from January 2002 for production quantities, and Figure 4-7 shows a further reduction in quoted prices over a 3-month period.

Table 4-7. Estimated O&M Costs for Gear-Driven 650- to 900-kW Turbines

	US$/Turbine/Yr (during warranty)	US$/Turbine/Yr (after warranty)	Cents/kWh (during warranty)	Cents/kWh (after warranty)
Developer P	$8,500	NA	0.4	NA
Developer Q	$6,500–$8,500	NA	NA	NA
Manufacturer R	$6,500	$11,000–$12,000		
Manufacturer S	NA	NA	0.5	0.75
Manufacturer T	$8,000			
Consultant U	$9,000	$20,000[a]	0.6	1.0
Vendor V[b]	$8,000	$10,000		

[a]$400,000/MW over 20 years with inflation and crane costs
[b]75%–80% of costs are associated with gearbox and cooling
Abbreviations: kWh = kilowatt hours; NA = not applicable; Yr = year

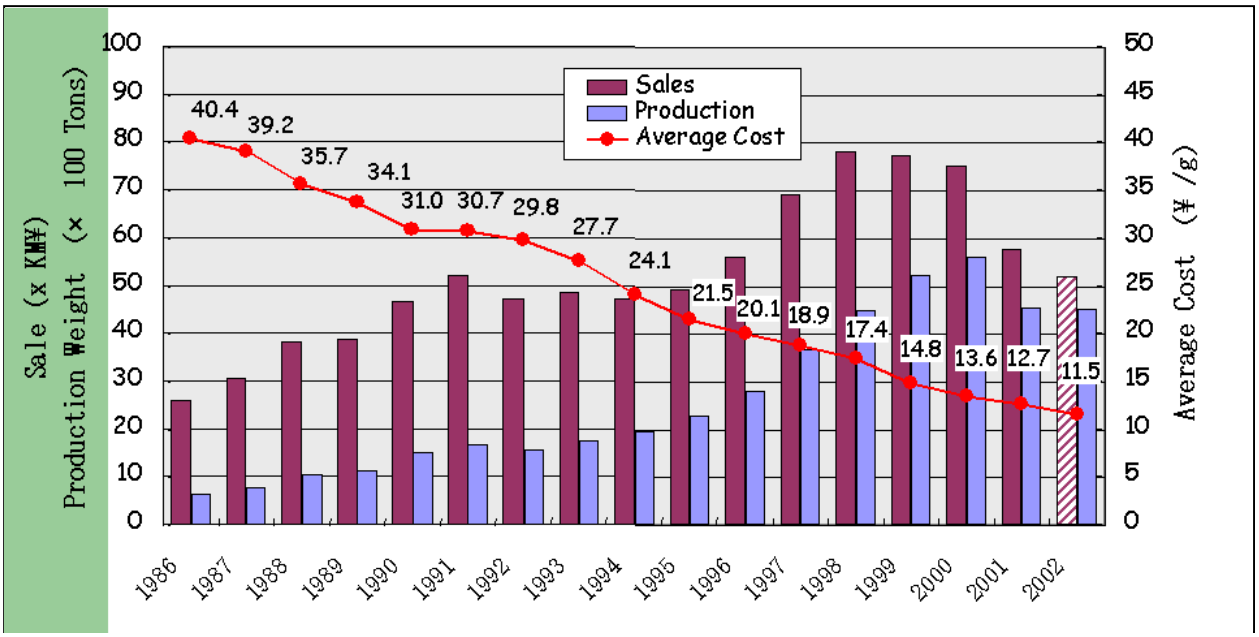

Courtesy of Shin-Etsu Magnetics

Figure 4-5. Rare-earth magnet cost and production trends.

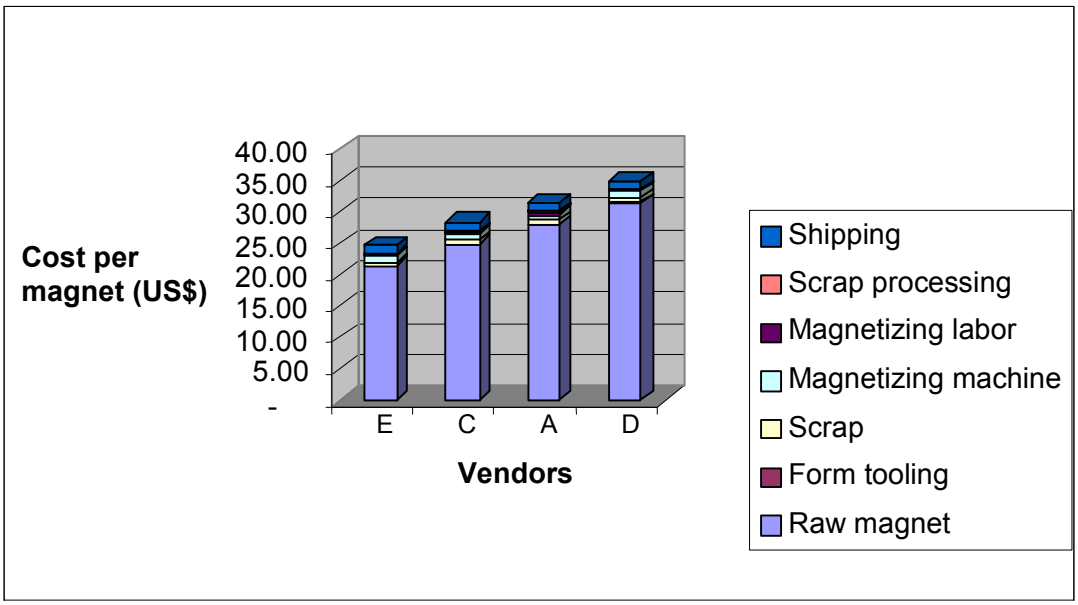

Notes:
Raw quote for 38MGOe neodymium iron boron (NdFeB) magnet (2" x 2" x 1").
US$10,000 tooling amortized over 120,000 units.
US$120,000 machine amortized over 120,000 units.
Technician labor is US$37/hr at 1000 units/day.
Assume 2% scrap.
Assume US$20,000 scrap processing and machine maintenance per 120,000 units.
Cost is US$1635 to ship 1200 magnets from United States to Europe.

Figure 4-6. Magnet quote comparison.

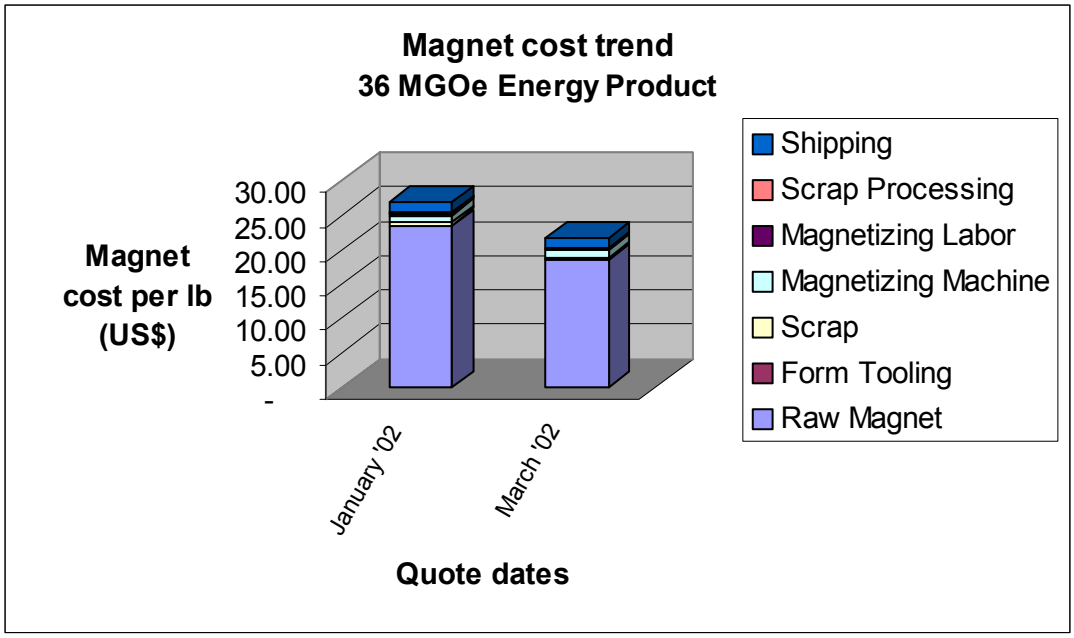

Figure 4-7. Short-term magnet cost trends.

Reasons for the significant drop in the price of the magnets in Figure 4-7 include the following:

- Magnet suppliers realize the size of potential opportunity for wind turbine generators.
- The magnet coating material was changed from nickel to epoxy.
- The promise of a blanket purchase order allows cost-effective production planning at the factory.

PM machines, which once carried a premium price because of the cost of magnets, are now cost-competitive with conventional wound rotor motors and generators. Also, for very large machines, such as those considered in this study, magnet vendors will price very aggressively based on the size of the order. Where these magnets may have cost more than US$100 per pound 10 years ago, a final burdened cost of less than US$20 per pound is possible today.

Appendix G contains additional information about rare-earth permanent magnets, their viability in commercial motor and generator development, and associated trends.

Semiconductor Technology

Semiconductor technology has improved greatly in terms of cost, size, and power capabilities. These improvements have a beneficial impact on the cost of wind turbines especially those using full-rated power converters. Figure 4-8 shows the development of semiconductor controlled rectifier (SCR), GTO, and insulated gate bipolar transistor (IGBT) technology (Jaecklin 1997).

Figure 4-8 implies it is possible to build megawatt-range power converters with the three types of semiconductor switches. A mature technology, thyristor's rate of growth (with respect to power handling) has stagnated over time. Newer technologies, such as injection-enhanced gate transistors (IEGT) and integrated gate commutated thyristors (IGCT), can potentially achieve much higher power-handling capability (Akagi 2002).

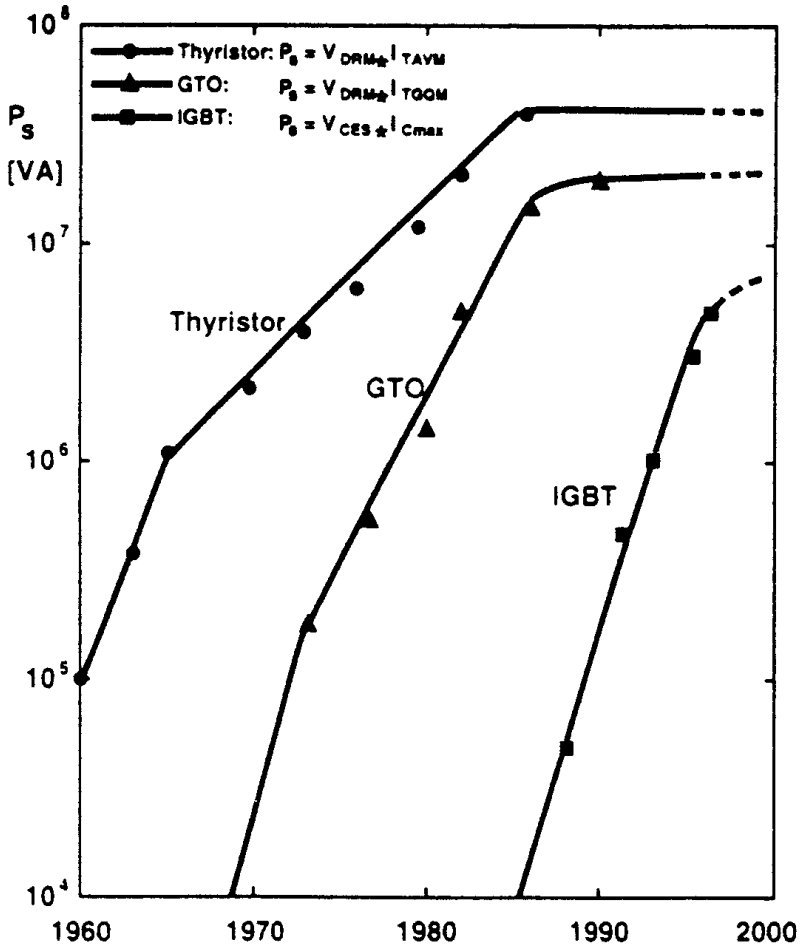

Source: Jaecklin (1997).

Figure 4-8. Historical development of switching power for power semiconductor devices: thyristor, GTO, and IGBT.

Component integration is another emerging trend in the field of power semiconductors. Power switches are available as packaged components that integrate gate circuits, multiple switches for the power-circuit topology, insulation, voltage current and temperature sensing elements, and fault protection. Figure 4-9 shows these packaged modules are available in higher voltages and current ratings (Lorenz 1997).

Packaged modules lend themselves to simple mechanical and thermal design, which leads to lower system cost. The reduced cost of power semiconductor devices is reflected in the 50% cost reduction of standard drive units in the 30-hp range between 1990 and 2000 (Figure 4-10) (Kerkman et al., 1999). Newly emerging power switching and packaging technologies indicate that the cost reduction trend will continue.

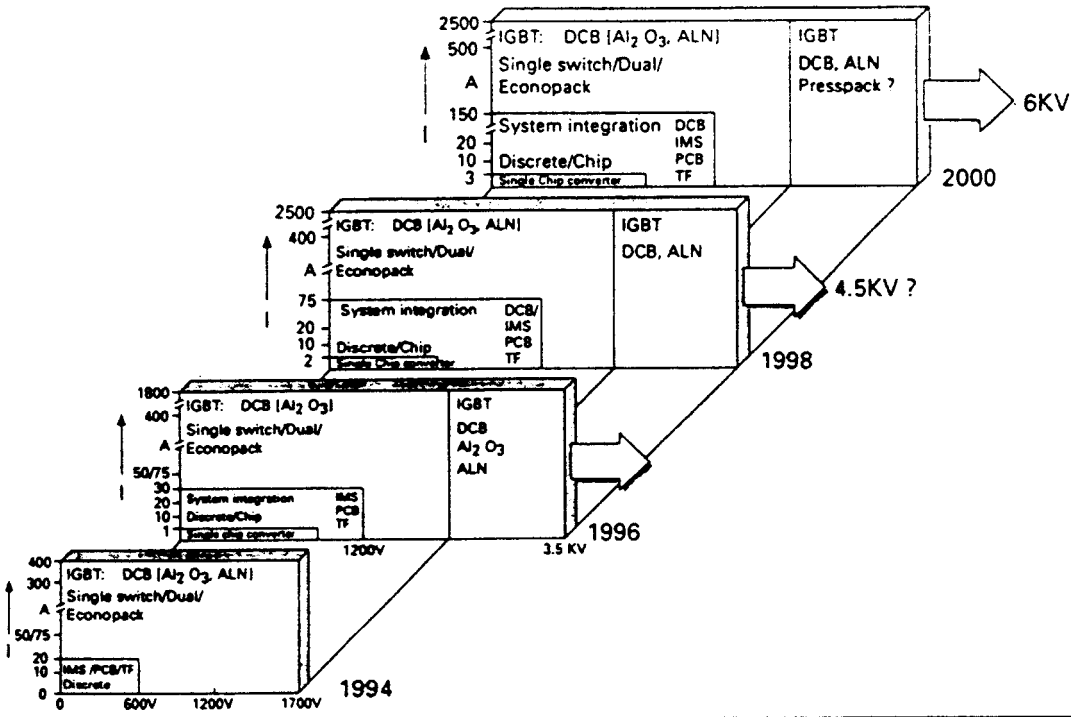

Source: Lorenz (1997).

Figure 4-9. Development and integration of power semiconductors and modules.

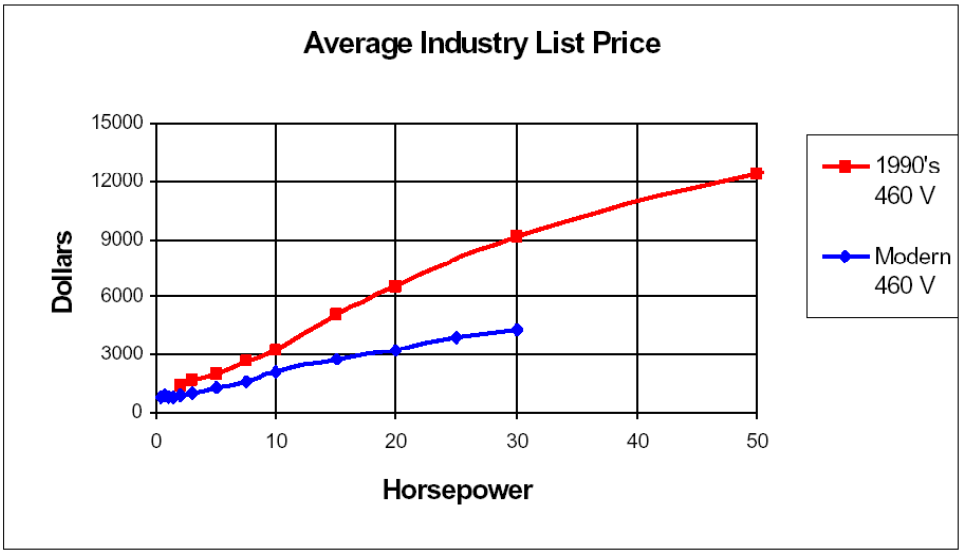

Source: Kerkman et al. (1999).

Figure 4-10. Average industrial drive cost trend.

The cost of power semiconductor devices is decreasing, while the performance of power semiconductor devices is improving (higher voltage ratings and lower switching losses). Increased control capability from the latest digital signal processing (DSP) technology enables complex switching methods and higher bandwidth control. These advances are leading to decreased cost per kVA for power conversion equipment.

4.4 Drivetrain Component Reliability

In addition to our market survey, we obtained data about the reliability of drivetrain components from the Allianz Center for Technology, W.A.Vachon and Associates, and Betreiber-Datenbasis.

Since the mid-1990s, the Allianz Center for Technology has analyzed causes of damage to wind turbine components. A recent article states, "the main center of damage is in the gear train—teeth, roller bearings, oil—and the generator bearings" (Bauer 2001). The Allianz Center for Technology provided us cost data for replacement and repair of drivetrain components.

Wind industry consultant W.A.Vachon and Associates predicted a mean time between failures (MTBF) of 12 to 15 years for well-maintained gearboxes and an MTBF of 10 years for high-speed generators.

Experienced in wind turbine O&M, both the Allianz Center for Technology and W.A.Vachon and Associates confirmed that the gearbox is a major contributor to downtime and O&M costs.

To assess the difference in O&M costs between gearbox and direct-drive configurations, we obtained data from Betreiber-Datenbasis, the source of *WindStats Newsletter* data for turbines operating in Germany. We wanted to compare failure rates, downtime, and other characteristics of direct-drive configurations with baseline configurations over several years.

However, because direct drive is the only alternative to multiple-stage gearbox-based designs with any operating history, data for alternative configurations other than direct drive did not exist (Table 4-8). Further, almost all direct-drive configuration data were for Enercon turbines. The lack of diversity in data for alternative configurations, as well as inconsistently reported data, made it difficult to quantify O&M costs for alternative drivetrains.

We decided to build a model "from the ground up" to quantify O&M costs for each drivetrain configuration. The model includes both costs affected by the type of drivetrain configuration and costs independent of the drivetrain configuration. The details of the O&M analysis appear in Appendix I of this report.

Table 4-8. Reliability Comparison of Gearbox and Direct-Drive Configurations

Rated power	**500–900 kW**		**>999 kW**	
Drivetrain configuration	Gearbox	Direct-drive	Gearbox	Direct-drive
Availability (%)	98.83	98.69	97.07	98.43
Average turbine age (months)	46	36	17.5	22.5

Abbreviations: kW = kilowatt
Source: Betreiber-Datenbasis (1999–2000)

4.5 Drivetrain Technology Options

4.5.1 Gearboxes

Reviewing current gearbox technology, Gear Consulting Services of Cincinnati (GCSC) found the following types of gearing applied to wind turbines:

- Multistage parallel
- Multistage/multipath parallel
- Single-stage epicyclic/two-stage parallel
- Multiple-stage epicyclic/single-stage parallel
- Compound planetary/single-stage parallel
- single-stage epicyclic/two-stage parallel.

On the basis of the team's expertise, we determined that the compound planetary technology is the most suitable gearbox technology for our study (Figure 4-11).

Figure 4-11. Cincinnati Gear 1.5-MW gear unit.

Gearbox Reliability

Because of widespread gearbox failures, many steps have been taken to improve wind turbine gearboxes, including:

- *Monitoring gearbox vibrations and condition of gearbox oil.* The NEG Micon retrofit program upsized gearbox bearings and improved bearing lubrication in more than 1200 turbines.
- *Improved oil filtration systems.* According to C.C. Jensen, supplier of gearbox oil filtration systems to Bonus Energy, NEG Micon, Vestas, and Gamesa, "When you change the filter size from 40 microns to 10 microns, you double the lifetime of the [gearbox] roller bearings."

Today wind turbine gearboxes are built to a stricter, more robust AGMA standard. This is consistent with our market survey, in which some European manufacturers reported customers increasingly willing to pay a premium for "heavy duty" gearboxes.

Gearbox Costs

Our market survey of wind farm developers, operators, and major international turbine suppliers revealed that gearbox replacement for a 660- to 900-kW machine is typically between US$50,000 and US$75,000 per turbine. Repairs range from US$10,000 to US$30,000, but vary greatly depending on turbine location and crane requirements (Table 4-9).

4.5.2 Generators

Table 4-10 describes the types of generators used for megawatt-scale wind turbines.

Table 4-9. Estimated Gearbox Costs for 650- to 900-kW Turbines

	Costs (US$)	Comments
Developer X	~$50,000–$60,000 Repair: ~$30,000 minimum	Costs vary greatly depending on turbine placement and crane requirements ~$10,000 minimum to transport crane to site
Manufacturer R	Replacement: $50,000–$70,000 Repair: $10,000–$20,000	High-end costs includes crane
Manufacturer W	~$60,000	NA
Consultant U	Replacement: $75,000	Additional $35,000 for crane

Table 4-10. Types of Generators for Megawatt-Scale Turbines

Type of generator	Description
High-speed induction—fixed speed with no power electronics	Simple, proven generator design Current inrush each time the machine is connected to grid Efficiency is poor
Wound rotor high-speed induction—variable speed	Proven generator configuration Slip rings and rotor winding add to rotor complexity Efficiency slightly better than cage rotor induction machines Usage of wound rotor avoids need for compromising efficiency (like in cage machines) because no induced slip current losses in wound rotor machines (induction between stator/rotor causes slip currents and related losses in cage machines); also power converter can be connected in series with rotor windings for greater torque from minimum to maximum speed and reduced current transient overshoot at an improved power factor in wound rotor machines
Wound field synchronous machines—direct drive with power electronics	Proven generator configuration Requires full-size power converter Machine is large because of low-speed design Possible efficiency improvement over the wound field induction machine Slip rings or separately coupled excitations system necessary
Permanent magnet synchronous machines (PMSM)—direct drive with power electronics	Relatively new generator configuration Requires full-size power converter Machine is large because of low-speed design Efficiency better than synchronous machines because rotor excitation is eliminated
Medium-speed PMSM—single stage with power electronics	Requires full-size power converter All machine design advantages of preceding generator types, plus reduction in size because of higher speed of operation
Multiple-generator drive	Individual medium-speed generators operate at a fraction of turbine rated power Components, such as bearings, housing, and terminations, must be duplicated

We performed a comprehensive assessment of generator technology and evaluated candidate configurations based on the following criteria:

- Power and torque density
- Efficiency
- Manufacturability
- Development and life cycle cost
- Reliability
- Heat removal
- Maintainability
- Technical maturity.

TIAX assessed generator technology and presented its findings to the team (see Appendix E). On the basis of the TIAX assessment and the expertise of the WindPACT team, we determined the most suitable configurations for our study.

Direct-Drive Versus Gear-Driven Generators

From our review of the literature, it is clear that the direct-drive generator for large-scale wind turbines has attracted market attention. System simplicity, quiet operation, and avoidance of costly gear failures promised by the direct-drive approach are recognized in the market. At the same time, researchers acknowledge that a viable direct-drive, turbine-speed generator must attain a very high mass-specific torque capacity to compete with the classic gear-driven, high-speed squirrel cage or doubly fed WRIG.

Endorsing enthusiasm for the direct-drive solution evident in the literature is the number of large, direct-drive, wound-field generator units (500 kW to1.5 MW) sold by Enercon since 1994, as well as those introduced by Lagerwey (750 kW) and Jeaumont. Recently, Enercon erected the E-112 prototype, a 4.5-MW direct-drive turbine. Mitsubishi also has a 2-MW direct-drive PM generator prototype turbine under test

Despite the successful commercialization of large-scale, direct-drive wind turbines by Enercon, other wind turbine manufacturers have not embraced this approach. Gear-driven units represent more than 85% of installed capacity worldwide.

Reporting "a clear advantage for the gear-driven configuration," Bohmeke and Boldt believe the disadvantages of structure-born noise and risk of (oil) leakage can be overcome by comparatively inexpensive measures and, further, that direct drive can compete economically only if very high failure rates are assumed for geared drives. Rahlf et al. (1998) note that the trend to weight-optimized construction presents the risk of sizing structures to accommodate stresses while providing insufficient attention to adequate stiffness. As a consequence, deflection of structures, such as hubs and gearboxes, might induce premature bearing failure. Inadequate gearbox stiffness also might promote gear failure. These reports imply that gearbox failures, which the direct-drive approach avoids, might be overcome by better gearbox design.

Grauers (1994) compares direct-drive configurations with competing gear-driven, high-speed induction generators. Analyzing annual average efficiency as a function of site wind-speed distribution, Grauers found a small efficiency advantage for the direct-drive approach, despite additional losses resulting from power conversion.

Most direct-drive studies focus more on innovative measures to reduce the size, weight, and cost of direct-drive generators so they can compete with conventional gear-driven, high-speed generators. The potential for greater energy productivity of direct-drive designs that operate at variable speeds is cited often as an economic advantage over fixed-speed, gear-driven units. Unfortunately, the Kennetech Windpower (formerly U.S. Windpower) patents, now owned by General Electric (formerly Zond and Enron Wind), may inhibit manufacturing and sales of variable-speed wind turbines in the United States for approximately 10 years.

Generator Configurations

Generator configurations can be classified as axial, radial, or transversal flux. Table 4-11 lists the distinguishing features of each class.

Table 4-11. Distinguishing Features of Radial, Axial, and Transversal Flux Generators

Class of Generator Configuration	Torque Productive Armature Current Path	Torque Productive Field Flux Path	Winding	Phases
Radial flux	Parallel with respect to rotation axis	Radial with respect to rotation axis	Distributed or concentrated	Typically 3
Axial flux	Radial with respect to rotation axis	Parallel with respect to rotation axis	Distributed or concentrated	Typically 3
Transversal flux	Circumferential with respect to rotation axis	Toroidal with respect to current axis	Concentrated	2 or 3

Radial Flux Configuration

The radial flux configuration is the most widely used in electrical machinery in general and wind turbine generators in particular. The ABB Windformer™ generator is a typical radial flux configuration (Figure 4-12).

Axial Flux Configuration

Envisioned at the dawn of the electrical age, axial flux configurations have sustained academic interest; however, until the introduction of Jeumont's J-48 axial flux direct-drive wind turbine, commercial units were found only in highly specialized applications, such as computer disk drives and industrial servomotors (Figures 4-13 and 4-14).

Figure 4-12. ABB Windformer™ generator.

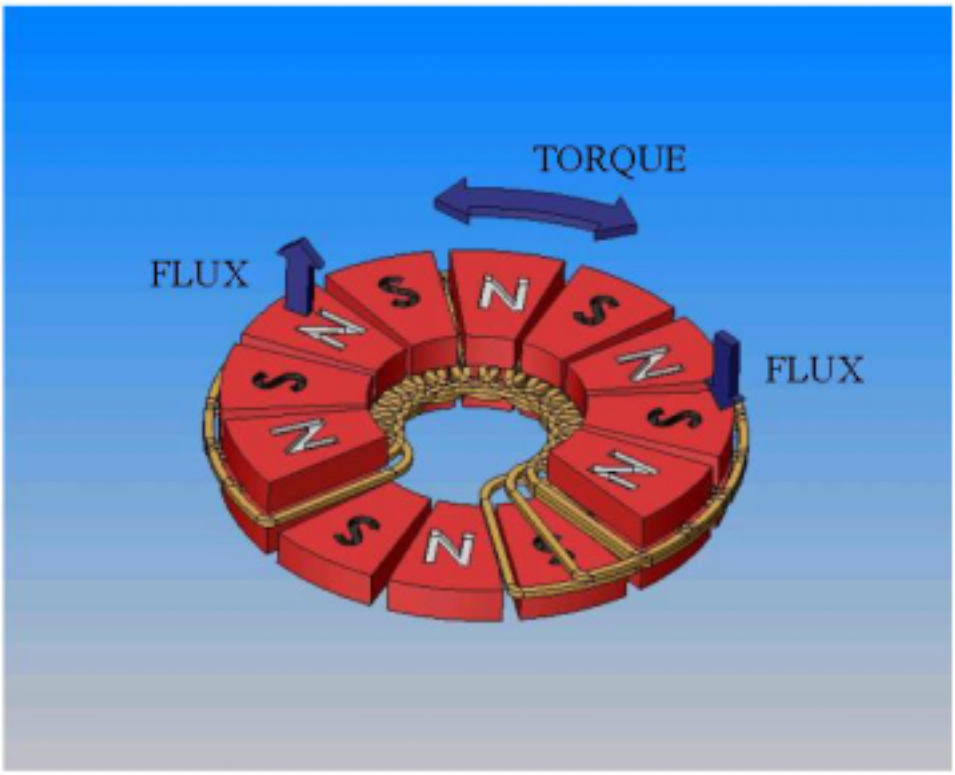

Figure 4-13. PM axial flux configuration.

Figure 4-14. Installation of Jeumont J-48 direct-drive turbine with PM axial flux generator.

Analyses by Grauers (1994) and Chertok and Lucas (1994) found the axial flux configuration deficient; the field at the inner portion of the machine contributes less to voltage induction than the field at the outermost station. (By contrast, all portions of the field in a radial flux configuration have an equally effective impact on voltage induction.)

Transversal Flux Configuration

The transversal flux machine is a relatively new and highly innovative concept (Weh et al. 1988; Weh and May 1988; Weh and Hoffmann 1988). Transversal flux machines are inherently single-phase, but can be configured for multiple-phase operation. Figure 4-15 depicts a cross-section of a double-gap, two-phase machine and an isometric detail of the flux-focusing field magnet structure.

Figure 4-16 shows a simpler, single-gap version of a transversal flux machine configured for three phases.

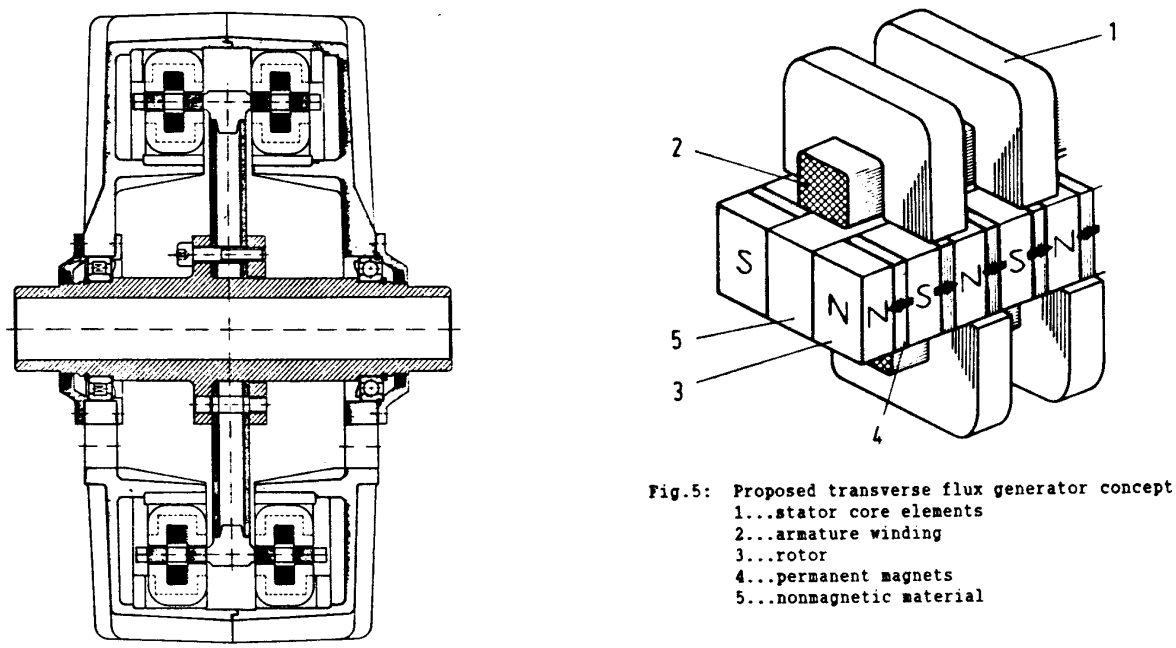

Figure 4-15. Double-gap, two-phase transversal machine proposed by Weh and colleagues.

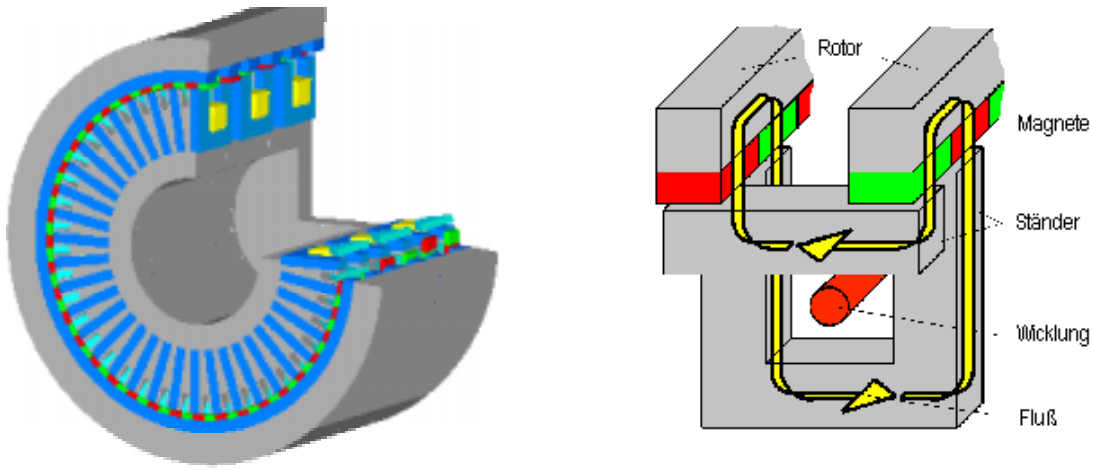

Figure 4-16. Single-sided, three-phase transversal flux machine.

The high torque density potential of the transversal flux machine and its modular, although complex, construction recommends this concept for a large direct-drive wind turbine generator if potential shortcomings can be overcome. Unfortunately, because the scale of designs investigated and tested to date is small (<10 kW), exploiting this concept for generator sizes envisioned by the WindPACT project entails excessive technical and programmatic risks.

Generator Architectures

A number of generator architectures fall within the broad classification of radial flux and axial flux configurations. Heffernan et al. (1996) studied the radial flux generator architectures in Table 4-12.

Table 4-12. Radial Flux Generator Architectures

Generator architectures	Variations	Notes
Doubly salient PM	Single- and three-phase Ferrite or NdFeB magnets	Unconventional concept Magnets located on the armature core
PM field synchronous	Surface NdFeB magnets Buried ferrite or NdFeB magnets	Well-established concept GDEB-patented technology
Wound field synchronous	—	Well-established concept Enercon direct-drive generator configuration
Squirrel-cage induction	—	Classic design for high speed
Doubly fed induction (brushless)	Without power converter With power converter	Brushless configuration unconventional
Switched reluctance	—	Unconventional concept at this size

Abbreviations: GDEB = General Dynamics Electric Boat; NdFeB = neodymium iron boron; PM = permanent magnet

Direct-Drive Alternatives

Although the most successful direct-drive generator to date is the wound field synchronous architecture employed by Enercon, the current focus of academic and commercial development is the PM field synchronous machine. Other candidates have been examined in previous studies, the most comprehensive being that by Heffernan and colleagues (1996) in which they examined less promising candidates, including the squirrel-cage machine, the doubly fed brushless generator (both with and without a converter), the switched reluctance generator, and the doubly salient PM generator. (Appendix E describes the Heffernan study in detail.)

Heffernan and colleagues favored only two architectures for a direct-drive generator in the power ratings of interest: wound field synchronous and PM synchronous. Table 4-14 shows weight and cost estimates of electromagnetic (EM) material for seven PM synchronous generator concepts they considered, normalized to weight and cost estimates for the proven direct-drive wound synchronous generator (first row of Table 4-13) exemplified by the Enercon configuration. All the radial field designs achieved an efficiency of 93% (presumably at their rated power of 500 kW and rated power speed of 50 rpm). Because efficiency is not stated for the transverse flux designs, weight and cost comparisons may not be valid.

From a cost, size, and weight perspective, Heffernan and colleagues concluded that the differences between the buried ferrite magnet and wound field synchronous designs were small and that the buried ferrite magnet design was more suitable. Except for using ferrite instead of NdFeB magnet material, General Dynamics presented the same embedded design at the WindPACT project kickoff meeting. The experience of Cantarey Reinosa (a former ABB plant located in Spain) enabled us to compare the proposed PM configuration to a commercial wound field machine. Significant cost decreases in recent years have made PM machines more commercially viable (see Appendix G).

Table 4-13. Normalized Weight and Cost of Materials of Favorable Generators

Generator configuration	Material weight (lb)	Material cost (US$)
144-pole wound field synchronous—baseline for PM-relative weights and costs	6700.00	$3,600.00
144-pole radial flux PM—buried ferrite magnet	6499	$3708
144-pole radial flux PM—buried rare-earth (NdFeB) magnet	6432	$9756
144-pole radial flux PM—surface ferrite magnet	8844	$4968
144 pole radial flux PM—surface NdFeB magnet	6566	$9504
48-pole transverse flux PM—ferrite magnet[a]	5360	$3852
58-pole transverse flux PM—NdFeB magnet[b]	3752	$6228
96-pole axial flux PM—ferrite magnet[c]	3350	$2736

[a,b] Weh and May (1988)
[c] Identified as axial field
Abbreviations: lb = pound; NdFeB = neodymium iron boron; PM = permanent magnet
Source: Heffernan et al. (1996)

Although the advantages of the 96-pole axial flux generator were acknowledged, concern was expressed about the structural integrity of the disk-like PM field structure. Moreover, tools to analyze its three-dimensional (3D) field and current distributions were unavailable.

Comparing PM with wound field, the following are advantages of PM:

- Higher operating efficiency—from 6% to 8%
  - Permanent magnets rather than excited field
  - Elimination of field losses
- Smaller, lighter
  - Higher torque density
  - 50% lower internal heat generation
- Simpler—less to manufacture, QA, and assemble
  - No slip rings or brushes
  - No field coils, wiring, or excitation control
  - Substantially smaller thermal dissipation system
- Inherent design features
  - Fail-safe and parking brake.

Comparing embedded magnets with surface mount magnets, the following are advantages of embedded magnets:

- Concentrated and directed flux field
- No eddy currents in magnet face
- Easy to fabricate and install
- Magnets are not subject to mechanical stresses in operation.

4.5.3 Power Converter

The WindPACT statement of work does not include power electronics R&D. We determined the most suitable, commercially available power converter topology based on the following criteria:

- First cost
- Efficiency
- Reliability
- Development and life cycle cost
- Technical maturity
- Maintainability
- Availability.

TIAX conducted a survey of the power electronics technology required to support wind turbine configurations (see Appendix F). On the basis of the TIAX survey and expertise of the Northern team, we determined the most suitable, commercially available topology for the PM generator.

Following are three commercially available power converter topologies for the wind turbine drivetrain:

- IGBT rectifier and inverter
- Diode rectifier–IGBT inverter
- Semiconductor controlled rectifier (SCR)–based topology.

The generator cost is approximately 44% higher with a diode rectifier or SCR-based power converter because of the restricted power factor for a given power, DC link voltage, and current. Therefore, we selected the IGBT rectifier and inverter for the WindPACT project.

Motor-drive vendors provide IGBT-based power converter hardware in the form of regenerative drives. Although power-converter hardware is applicable in test systems, lack of control flexibility can limit optimal operation of a PM generator.

IGBT power-converter hardware is unaffected by generator speed at frequencies for direct-drive and medium-speed wind turbines. The IGBT rectifier is referred to as an “active rectifier” to differentiate it from the traditional, diode-bridge rectifier. There is no difference in power converter cost between the direct-drive and the single-stage, single-output configurations with gearboxes. However, in the multiple-generator configuration with parallel power paths, each generator requires an active rectifier. A comparison of air- and water-cooling costs indicates that water-cooling is less expensive in the 1-MW power range when using switching frequencies greater than 2 kHz. On the basis of cost, we chose a water-cooled power converter.

5 Design Specifications and Parameters

The original WindPACT SOW specified turbine and site parameters. While the meteorological parameters were used, the turbine-specific parameters were altered based on current industry trends. With NREL's approval, we chose available blade designs for the turbine rotors; the blade designs set the remaining rotor design parameters. The rated wind speed, Cp, and turbine loading were determined by calculations.

Following are the design specifications used for the study:

- System specifications:
  - Variable speed operation with Cp through performance calculations
  - Rotor tip speeds: 1.5 MW = 72 m/s; 3.0 MW = 76 m/s
  - Turbine hub height = 1.2 × rotor diameter
  - Rated wind speed = approximately 12 m/s
  - Cut-out wind speed = 25 m/s
- Design wind class:
  - WTGS Class II
- Performance wind definition for evaluating the design:
  - Air density = 1.225 kg/m^3 (sea level)
  - 10-m wind speed = 5.8 m/s (annual average)
  - Rayleigh distribution
  - Power law = 0.143.

5.1 Selection of Rotor Diameter

Based on the design criteria, a closed-form solution that gives rotor diameter based on electrical power rating was derived following Griffin (2001):

$$D = (P_{rated}/61.1)^{0.412}$$

where D is the rotor diameter in meters, and P_{rated} is the rated electrical power of the turbine in watts. This relationship was used to develop the specific rating trend dictated by the SOW and was compared with current and proposed turbine designs. Figure 5-1 shows the data.

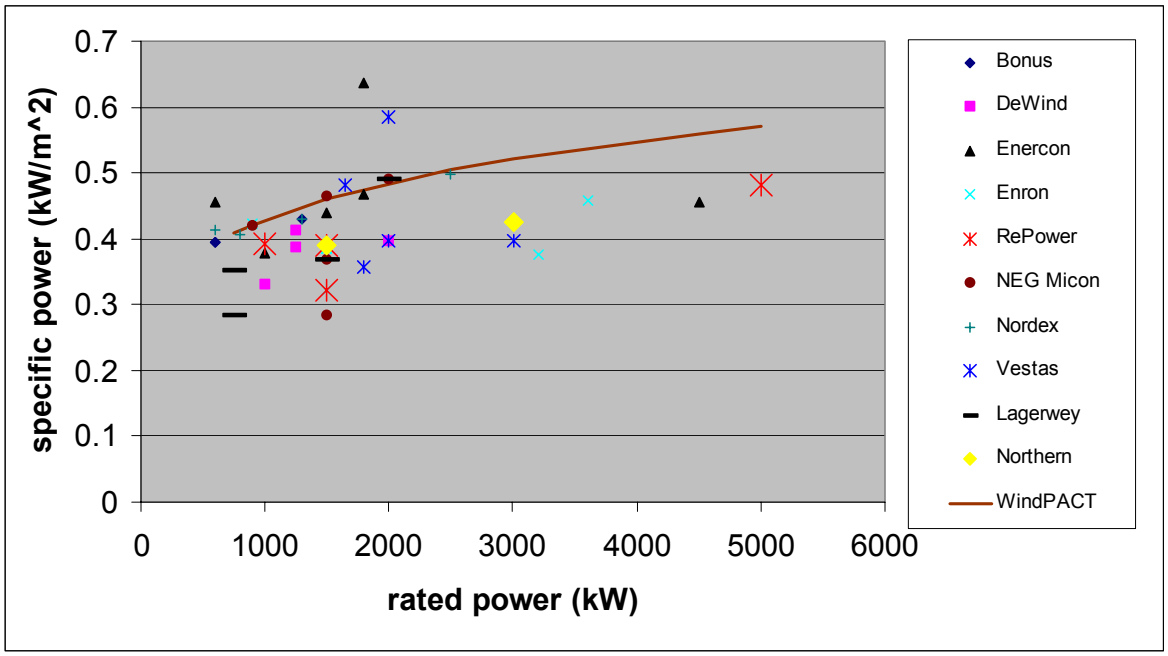

Figure 5-1. Comparison of specific rating data.

The industry data shows large scatter in the 500- to 2000-kW turbine sizes and somewhat less scatter for larger turbines. The scatter at the low end is indicative of varying philosophies of design and of different design wind classes for a given turbine rating. Several turbine designs in this rating class are offered with multiple rotor sizes. The larger turbines are generally designed for offshore deployment, with attendant higher wind speeds and lower specific ratings. Although the WindPACT project specifications give generally higher-than-average specific ratings, which imply smaller rotors for a given power rating, the trend follows the data well.

As mentioned above, the rotor designs were based on available blade designs. An industry-standard blade was chosen for the 1.5-MW design. The rotor diameter is 70.5 meters; the specific rating for the Northern design is shown in Figure 5-1.

On the basis of this data, we chose a target specific rating of 0.45 kW/m^2 for the 3-MW machine. "Off-the-shelf" blade choices are few for turbines in the 3-MW class. Although intended for offshore use, one manufacturer's design closely matched our specifications. The proprietary technology allows blade extensions from the root or tip. Northern modified the blade design within the capabilities of this technology to arrive at the current design.

Plotting all turbine manufacturers' data shows large scatter in the results (Figure 5-1). Plotting the specific rating against the design wind speed for one manufacturer's blade line, it is possible to extract a "design law" from the data (Figure 5-2).

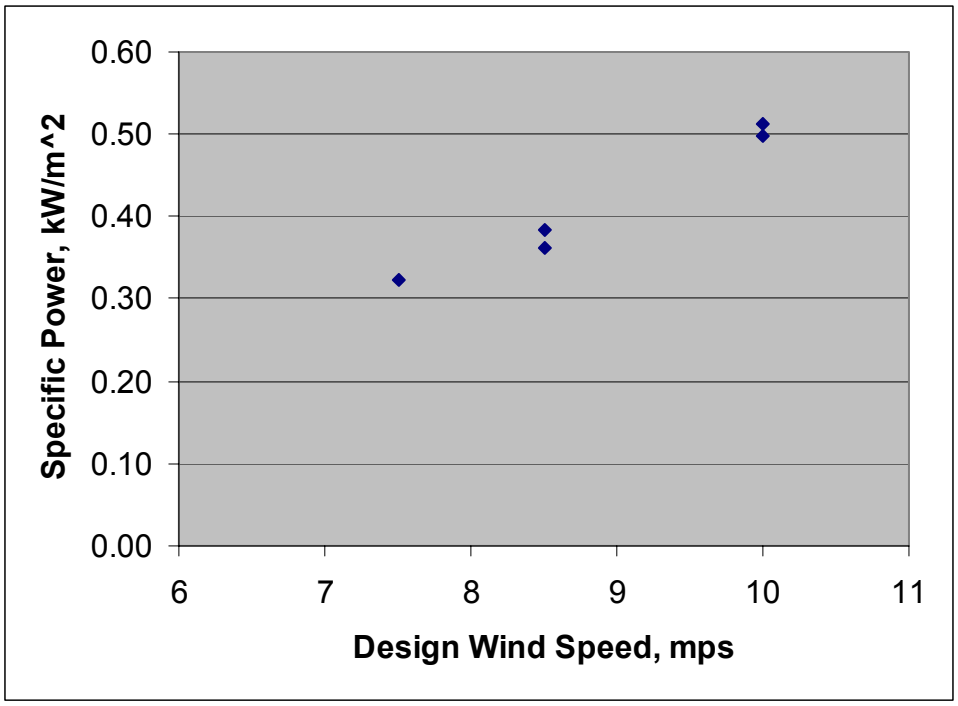

Figure 5-2. Specific rating trend for one manufacturer's blade line.

5.2 Turbine Specifications

Taken from the Northern specifications (Appendix B), the sections that follow describe the architecture and general specifications for baseline turbines at 1.5 and 3 MW.

5.2.1 Turbine Architecture

The turbine has a three-blade, independently pitch-controlled upwind rotor with a rigid hub. The coning angle is 0 degrees (although the rotor may be "predeflected" upwind), and the angle of the low-speed shaft is 5 degrees with respect to horizontal. The rotor/drivetrain operates at variable speed.

The drivetrain is composed of the rotating equipment and bearings from the hub flange to the generator, the associated electronics and controls, the bedplate (which supports the rotating equipment and transmits loads to the tower), and the power converter.

A tubular steel tower is assumed for loads and foundation calculations. The only specific tower requirement is to maintain a similar height and natural frequency.

The turbine controller oversees all turbine operation and all safety and state transitions, except to maintenance mode. It allows remote monitoring and supervisory control of the wind turbine, as well as fault/alarm data storage. The turbine controller is described in more detail below.

5.2.2 Drivetrain Specifications

Table 5-1 shows typical specifications for the 1.5- and 3-MW turbine designs.

Table 5-1. Turbine Drivetrain Specifications—IEC WTGS Class II

Electrical power rating[a]	1.5 MW	3 MW
Low-speed shaft speed		
Minimum (n1)	12.0 rpm	8.5 rpm
Rated (nr)	19.7 rpm	15.3 rpm
Maximum operating (n2)	22.2 rpm	17.0 rpm
Overspeed shutdown (1.1*n2)	24.4 rpm	16.8 rpm
Maximum design (1.25 * n2)	27.8 rpm	19.1 rpm
Low-speed shaft power		
Mechanical rating (Pr)	1.603 MW	3.206 MW
Maximum operating (Pt = 1.0*Pr)	1.603 MW	3.206 MW
Maximum instantaneous (Pmax = 1.1*Pr)	1.763 MW	3.527 MW
Reference		
Cut-in wind speed	3 m/s	3 m/s
Rated wind speed	12 m/s	12 m/s
Cut-out wind speed	25 m/s	25 m/s
Rotor diameter	70.5 m	94.8 m
Hub height	84.0 m	112.0 m
Design life	20 yr	20 yr

Values for the baseline configurations are derived from turbine simulations and Germanischer Lloyd recommendations.
[a]Rated electrical power values assume 94% drivetrain efficiency at converter output.

5.2.3 Turbine Safety and Operation

Turbine Safety

Three independently pitching blades compose the turbine safety system. Normal and emergency shutdowns are achieved by pitching the three blades simultaneously. Redundant safety is inherent in this design because the turbine can be brought to a safe condition despite the failure of one pitch drive. In either case, the rotor can be brought to rest by applying the shaft disk brake after the rotor is slowed by the pitching action of the blades.

Turbine Operation

The controller supervises all turbine operations. Only the transition to the maintenance state is initiated through human-machine interface. Following are the turbine's operating states:

- *Idling.* The blades are pitched to the feathered position, and the rotor can turn freely. The turbine is "waiting for wind."
- *Startup.* The blades are pitched to the startup position when the wind speed approaches cut-in wind speed.
- *Generating.* The turbine is producing power. The output power injected into the grid is controlled as a function of rotor speed. The power command is clamped at the machine rating, and blade pitch is adjusted to limit the rotor speed at rated output.

- *Normal shutdown.* The blades are pitched slowly to feather.
- *Emergency shutdown.* The blades are pitched quickly to feather.
- *Parked*. The blades are pitched to feather, and the parking brake is applied.
- *Maintenance*. The blades are pitched to feather, the parking brake is applied, and the turbine is locked out.

5.2.4 Power Curves

Figure 5-3 shows the power curve for the 1.5-MW baseline turbine, and Figure 5-4 shows the power curve for the 3-MW turbine. There will be slight variations in the power curve for different drivetrain configurations as a result of variations in drive efficiency.

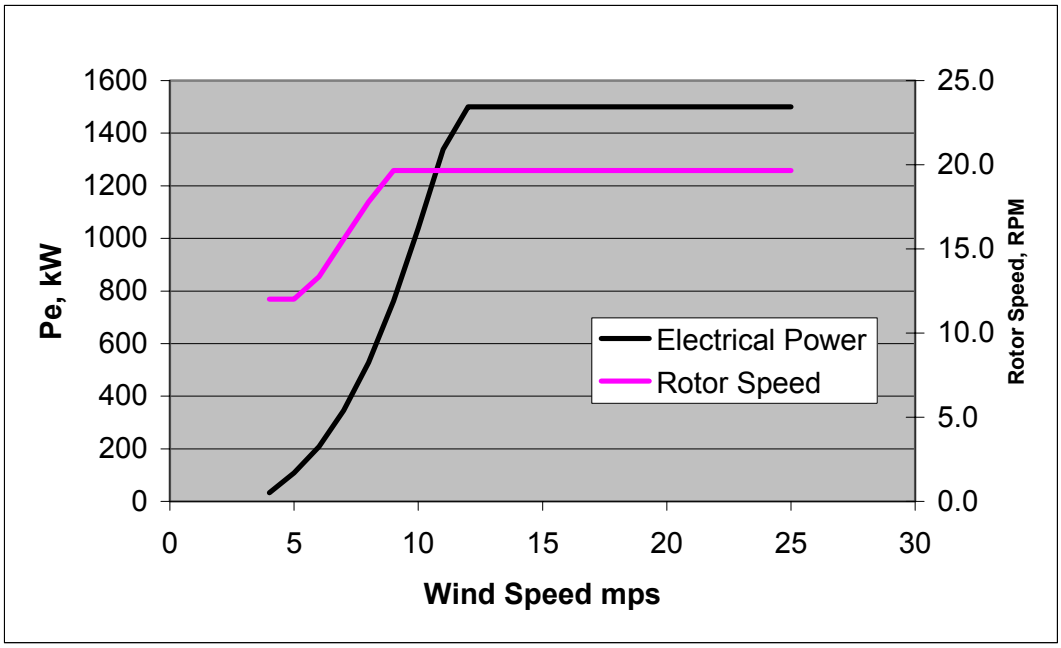

Figure 5-3. The 1.5-MW baseline power curve.

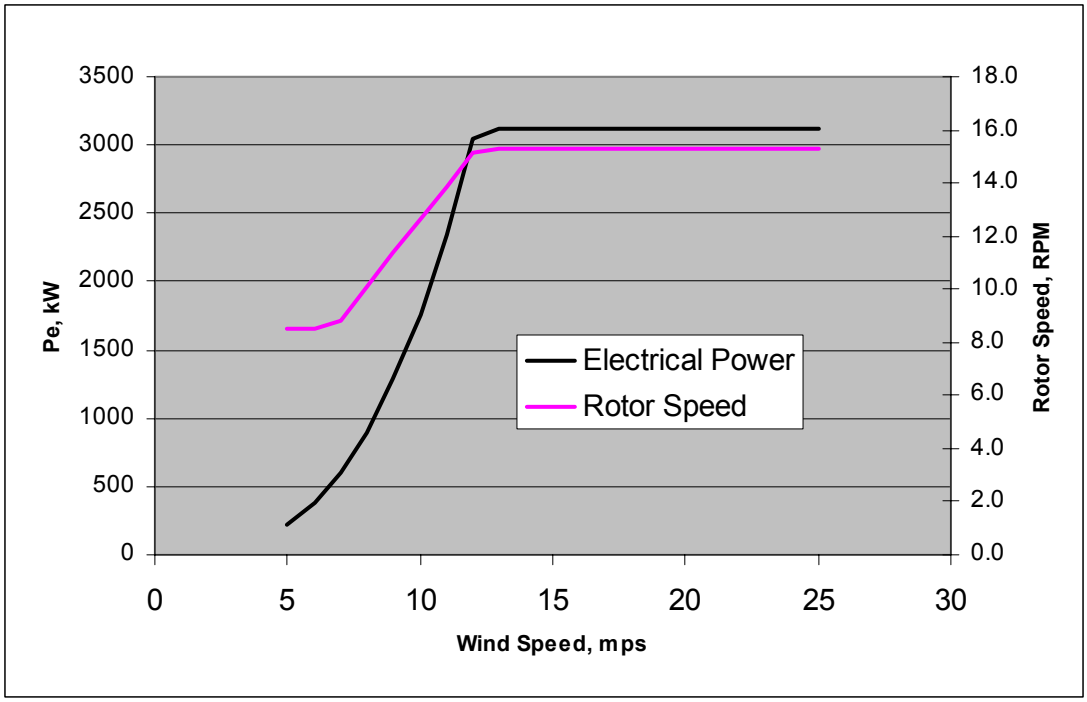

Figure 5-4. The 3.0-MW baseline power curve.

5.2.5 Other

The drivetrain design includes the following:

- Parking brake at the rotor shaft
- Rotor lock on the low-speed side
- "Mechanical fuse" in the drive line
- Slip ring
- Speed sensor to trigger a shutdown independent of the main controller
- Emergency stop buttons within reach of each service location
- Lift points
- Lanyard attachment points.

5.2.6 Structural and Mechanical Design

As required by IEC 61400-1, structural design conforms to *General Principles on Reliability for Structures* (ISO 2394:1998). Gear design conforms to *Recommended Practices for Design and Specification of Gearboxes for Wind Turbine Generator Systems* (AGMA/AWEA-921-A97) and *Fundamental Rating Factors and Calculation Methods for Involute Spur and Helical Gear Teeth* (ANSI/AGMA 2001-C95). The drivetrain loads in Appendix B were used as a basis for analysis.

5.2.7 Electrical Design

Power Circuit

Electrical output from the power converter conforms to *IEEE Recommended Practices and Requirements for Harmonic Control in Electrical Power Systems* (IEEE Std 519-1992). Voltage tolerances adhere to *Electrical Power Systems and Equipment—Voltage Ratings (60Hz)* (ANSI C84.1-1995). The power converter efficiency (as measured between the AC input from the generator to the AC output to the grid) is at least 95% when operating from 50% to 100% of rated power. The power converter minimizes electromagnetic interference (EMI), which could cause instrumentation, communication, and other electronic equipment to operate poorly. Table 5-2 shows attributes of the power converter.

Protection and Safety

The wind turbine incorporates anti-islanding standards, both meeting UL1741 Sec. 46.3 requirements and protecting from the following:

- Over and under voltage
- Over and under frequency
- Over current
- Voltage surge
- Ground fault
- Loss of phase
- Phase reversal.

Table 5-2. Power Converter Attributes

Attribute	Description
Output surge power	120% of rated power for 30 seconds
Frequency	50/60 Hz; programmable
Switching frequency	Minimum 5 kHz
Displacement power factor	>0.95 from 20% to 100% of rated power
Ambient temperature	Operating: from –20°C to 50°C Storage: from –40°C to 85°C

Abbreviations: C = centigrade; Hz = Hertz; kHz = kilohertz

Table 5-3. Physical Environment of Turbine

Attribute	Description
Operating temperature	From –20°C to 50°C
Minimum temperature	–40°C
Humidity	From 0% to 100%, condensing
Airborne contaminants	Dust and pollution
Altitude	To 1000 m without derating

Abbreviations: C = centigrade; m = meter

5.2.8 Physical Environment

Table 5-3 describes the turbine's physical environment. The turbine design is adaptable to coastal/offshore siting, and all turbine components are protected from damage resulting from lightning.

5.2.9 Maintenance

The turbine tower provides a safety climb system. Attachment points are furnished in the tower top and nacelle for maintenance personnel. The maintenance interval is 6 months.

5.3 Loads

Based on the Northern loads document (Appendix D), this section describes how we established loads for the 1.5-MW and 3-MW turbines. The loads specification (Appendix C) contains the computed loads.

The following loads were calculated for design purposes:

- Shaft torque duration loading
- Bearing load duration histograms
- Shaft-end extreme loads
- Shaft-end fatigue load histograms.

We employed an aeroelastic simulation code to calculate drivetrain loads under various operational and parked cases. A "typical" turbine of a given size was modeled, including blade and tower flexibility, variable speed operation, and pitch control. We used an assortment of programs to produce loads for designing drivetrain components—shafts, bearings, gears, and bedplates. These loads were then used to dimension the turbine components.

In the sections that follow, the loads apply to the turbine specifications described in Section 5.2.

5.3.1 Loads Cases

We used a truncated set of design loads cases that we determined were the dimension-driving cases for the turbines considered in Phase I of the WindPACT project. A more complete set of loads cases will be used for the detailed design in Phase II to ensure the loads specification conforms to a main governing body, such as Germanischer Lloyd or Underwriters Laboratories. The loads given in the specification were calculated in the spirit of IEC (1999) and Germanischer Lloyd (1999) standards.

Table 5-4 shows the loads cases used as the basis for dimensioning.

5.3.2 Modeling

Turbine and Wind Models

We used the FAST (Buhl and Jonkman 2002) wind turbine dynamics program to calculate loads. We used the SNWind program (Kelley and Buhl 2001) to generate turbulent wind files and the IECWind program (Laino 2001) to generate discrete gust events.

Table 5-4. Design Loads Cases

Design situation	DLC	Wind condition	Type of analysis	Comments
Power production	1.1	NTM	U	6 seeds each at 8, 12, 16, 20, and 24 mps
	1.2	NTM	F	6 seeds each at 8, 12, 16, 20, and 24 mps
	1.3	ECD_00NR	U	1 run at 12 mps
	1.3	ECD_00PR	U	1 run at 12 mps
	1.6	EOG_01_	U	2 runs total at 12 and 24 mps
		EOG_50_	U	2 runs total at 12 and 24 mps
	1.7	EWSH00N	U	2 runs total at 12 and 24 mps
		EWSH00P	U	2 runs total at 12 and 24 mps
		EWSV00	U	2 runs total at 12 and 24 mps
		EWSV00p	U	2 runs total at 12 and 24 mps
	1.8	EDC_50N	U	2 runs total at 12 and 24 mps
		EDC_50P	U	2 runs total at 12 and 24 mps
		EDC_01N	U	2 runs total at 12 and 24 mps
		EDC_01P	U	2 runs total at 12 and 24 mps
	1.9	ECG_00_R	U	1 run at 12 mps
Parked	6.1	NTM, V_{mean} = 42.5 mps	U	3 seeds total

Abbreviations: DLC = design loads case; F = fatigue; mps = meters per second; NTM = normal turbulence model; U = ultimate

Coordinate Systems

Figures 5-5 and 5-6 show the coordinate systems used by the FAST program. The coordinate systems correspond to those defined by Germanischer Lloyd (1999) Note: Coordinate subscripts correspond to original labels written in German.

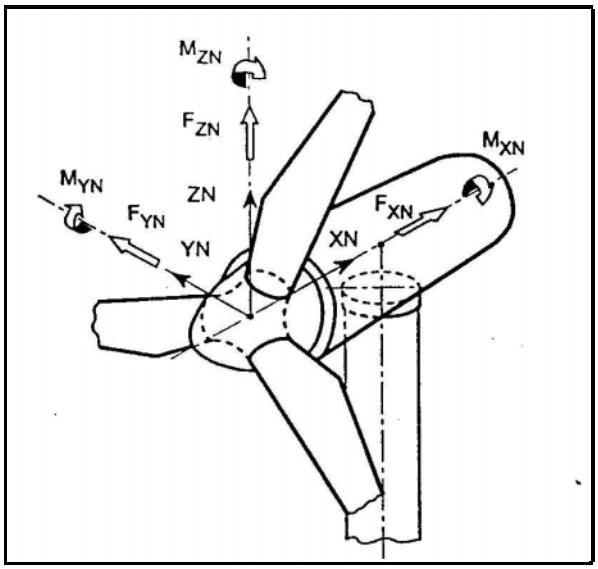

Figure 5-5. Hub coordinate system.

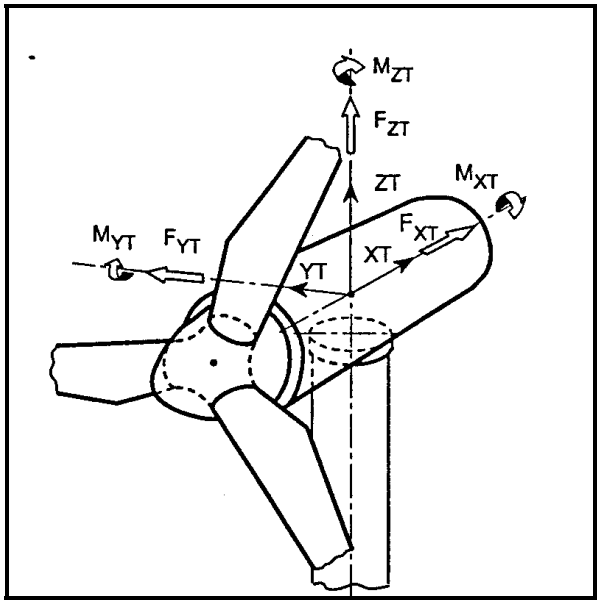

Figure 5-6. Nacelle coordinate system.

Table 5-5. Output Loads

Signal name	FAST designation	Coordinate system	Vector
Mechanical power	LSShftPwr	—	
Electrical power	GenPwr	—	
Rotor rpm	RotSpeed	—	
Rotor thrust	RotThrust	Hub	Fx
Hub side force	LSShftFys	Hub–nr	Fy
Hub vertical force	LSShftFzs	Hub–nr	Fz
Shaft torque	RotTorq	Hub–r	Mx
Hub pitch moment	LSSGagMys	Hub–nr	My
Hub yaw moment	LSSGagMzs	Hub–nr	Mz
Hub–r side force	LSShftFya	Hub–r	Fy
Hub–r vertical force	LSShftFza	Hub–r	Fz
Hub–r pitch moment	LSSGagMya	Hub–r	My
Hub–r yaw moment	LSSGagMza	Hub–r	Mz
Nacelle horizontal force	YawBrFxn	Nacelle @ Yaw Bearing	Fx
Nacelle side force	YawBrFyn	Nacelle @ Yaw Bearing	Fy
Nacelle vertical force	YawBrFzn	Nacelle @ Yaw Bearing	Fz
Nacelle roll moment	YawBrMxn	Nacelle @ Yaw Bearing	Mx
Nacelle pitch moment	YawBrMyn	Nacelle @ Yaw Bearing	My
Nacelle yaw moment	YawBrMzn	Nacelle @ Yaw Bearing	Mz

Abbreviations: FAST = fatigue, aerodynamics, structures, and turbulence

Output Loads

Table 5-5 shows the required program output for the drivetrain design. Loads were output in both rotating and nonrotating coordinate systems. The coordinate systems were differentiated by appending "–r" or "–nr" to the coordinate system name.

Data Processing

The following paragraphs describe the programs and formulas used to process data. Appendix C contains the computed output.

We used Crunch (Buhl 2002) to compute statistics and extreme and fatigue loads, and we used a spreadsheet created by Windward Engineering to calculate damage-equivalent loads. Working with Windward, we created a program to develop bearing load histograms.

Run statistics. Statistics for each run file were calculated and used primarily for reference.

Extreme loads. Extreme loads were calculated using Crunch. The loads in Appendix C are time-coordinated loads taking the maximum of each signal in turn.

Rainflows and damage-equivalent loads. Rainflows were calculated using Crunch and converted to damage-equivalent loads for the preliminary design.

Damage-equivalent loads. Damage-equivalent loads were calculated using the formulas that follow.

The damage-equivalent load Req is

$$Req = [\ (\Sigma n_i\ R_i^m) / Neq\ ]^{(1/m)}$$

where

Neq	=	number of cycles
m	=	material exponent
R_i	=	load
n_i	=	number of cycles of load R_i
$[n_i, R_i]$	=	distribution of range loads.

Part life L is

$$L = [a(uReq)^{-m}] / Neq$$

where

u	=	unit stress function (stress/load) for the section/detail in question
a	=	material dependent coefficient.

Damage at design life D is

$$D = L_D \times 1/L$$

where

L_D = design life.

The fatigue curve slopes in Table 5-6 were used to compute damage-equivalent loads.

Table 5-6. Material Exponents

Material	Loading	Material exponent *m*
Iron casting	Normal stress	8.8
Weldment	Normal stress	3.0
Forging	Normal stress	12.5
Bolted joint	Normal stress	3.0
All	Shear	5.0

Torque duration curves. Torque duration curves were computed as 2D histograms with the time-coordinated torque and speed values binned together.

Bearing loads. For bearing design, multidimensional histograms were calculated at the location corresponding to the shaft flange. The histogram shows the operating hours at time-coordinated values of shaft speed, thrust and radial loads, and shaft-end moments. For bearing design calculations, the moments were converted to radial load based on the given bearing configuration.

5.3.3 Input Files

We developed input files using information from manufacturers and results from our preliminary design exercises. Company L provided the blade structural and aerodynamic properties for the 1.5-MW turbine, and Company M provided the blade structural and aerodynamic properties for the 3-MW turbine. The 3-MW turbine blade was modified slightly to increase tip diameter. We used the preliminary designs for rotor hub, drivetrain, and tower to create the remaining structural inputs. Windward Engineering developed the inputs for the pitch controller for the 1.5-MW turbine; these inputs were tuned by Northern for the 3-MW turbine.

5.3.4 Turbine Design Loads

Appendix C contains the design loads for the 1.5-MW and 3-MW turbines. The specification covers the extreme loads, cyclic fatigue loads, bearing fatigue loads, and torque duration curves. Table 5-7 shows the partial loads factors used in our analysis.

5.3.5 Dynamics

The loads in Appendix C are based on component stiffness properties, which lead to the system dynamics shown in Figures 5-7 and 5-8. Changes in machine configuration (e.g., hub height and rotor diameter) that affect machine dynamics require reevaluation of the turbine design loads.

Table 5-7. Partial Loads Factors

Applied to	Value
Extreme loads	1.35
Fatigue loads	1.00

Source: IEC (1999)

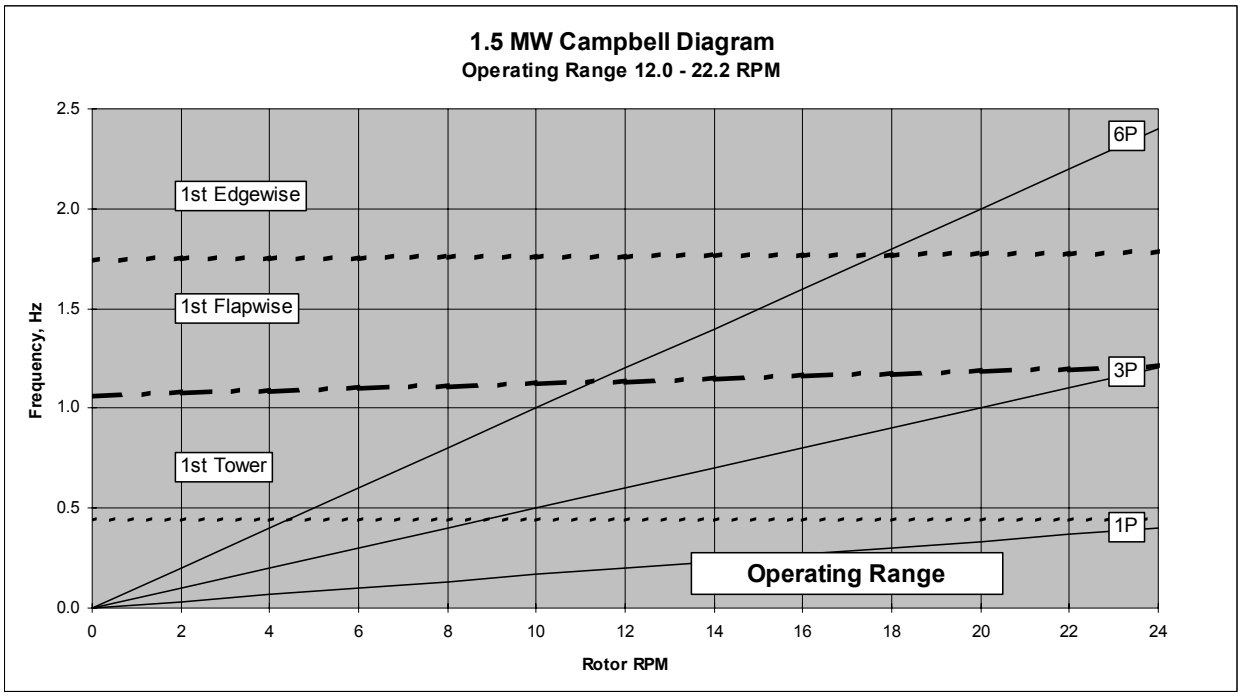

Figure 5-7. The 1.5-MW Campbell diagram.

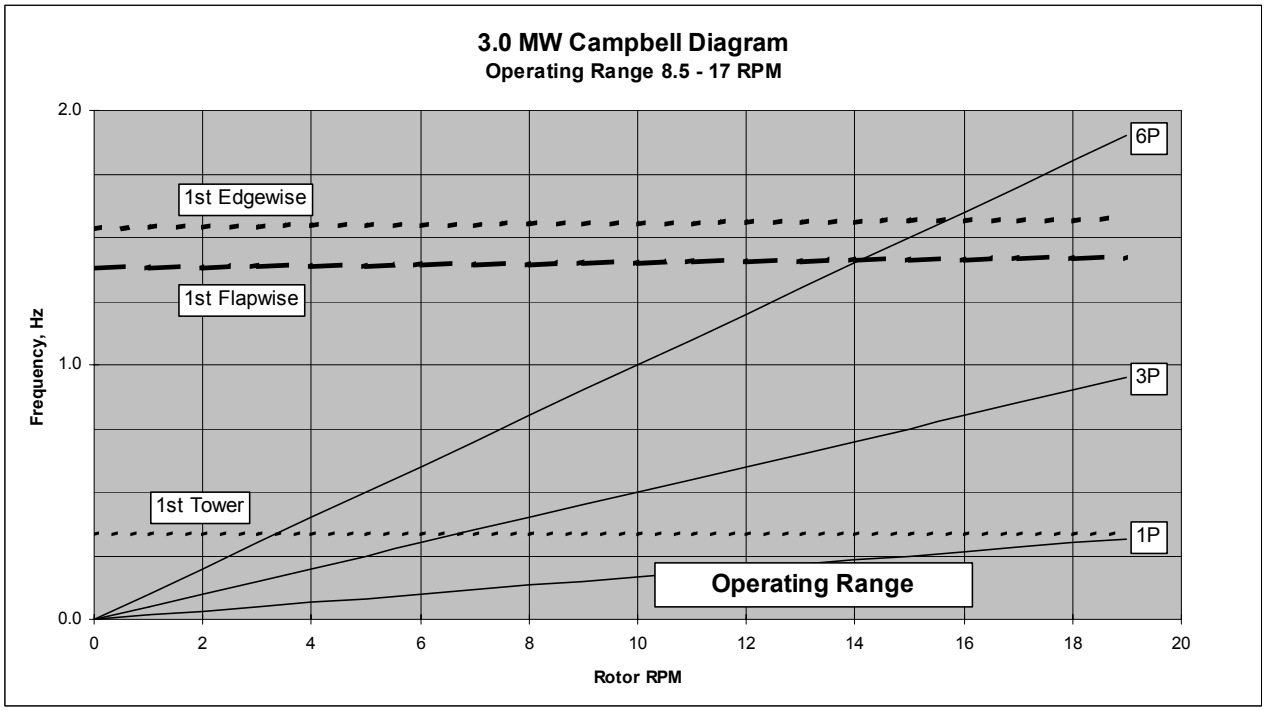

Figure 5-8. The 3-MW Campbell diagram.

6 Selected Drivetrain Technologies

This section describes our technology options selected for further evaluation based on the technology assessment (Section 4) and preliminary design exercises. Each section summarizes the design methodology used for the given components and subsystems, gives design considerations gleaned from Section 4, and gives the results of the preliminary design exercises.

6.1 Generator

6.1.1 Design Studies

Based on the results of the technology assessment (Section 4), we concluded that for new drivetrain configurations, the PM generator design had the potential to decrease the cost of energy. To summarize, the PM generator has the following advantages over the wound rotor (WR) machines:

- Higher efficiency
- Higher reliability
- Compactness
- Ease of manufacture.

Also as a result of the review of PM generator technologies, we selected radial flux designs over axial flux or transverse flux designs and, further, we selected EBGDs embedded magnet design over more conventional surface-mount designs. The EBGD design has the following advantages over surface mount designs:

- Concentrated and directed flux field
- No eddy currents in magnet face
- Easy to fabricate and install
- Magnets are not subject to mechanical stresses in operation.

A potential disadvantage of PM designs in general is higher cost. In order to determine if the PM generator can compete economically, we performed a study to estimate the cost of a PM redesign (based on EBGDs topology) of a known direct-drive generator design.

Comparison of 750-kW Wound Field and PM Direct-Drive Generators

To validate our assessment of generator technologies, we compared 750-kW wound field and PM generators. Cantarey Reinosa, manufacturer of a wound-field direct-drive generator for the Lagerwey 750-kW turbine, provided specifications, performance, and cost data to the project team. To analyze the commercial viability of the PM generator for turbine applications, GDEB conducted a conceptual design study using the same physical envelope. By using permanent magnets instead of a wound rotor, the external power source for the rotor is eliminated along with the associated size and weight penalties as well as the electrical and thermal losses. This increases machine efficiency and torque density, simplifies cooling, and reduces maintenance and life cycle costs.

The study concluded the following:

- Cost would be ±5% of the wound-field generator, depending on magnet content and quantity
- Generator efficiency for PM designs could increase up to 96%, and peak output power could increase up to 150% within the same envelope.

We selected an interior magnet PM synchronous generator designed by GDEB. The magnet blocks do not require special shaping. Because the magnets are in the interior of the rotor, eddy current heating of the magnets is eliminated. The interior magnet PM synchronous generator configuration prevents demagnetization when large short-circuit currents flow in the stator winding.

6.1.2 Permanent Magnet Generator Design Considerations

GDEB identified the following major PM generator design considerations:

- Magnetic design
- Cooling method
- Additional losses.

Generator design considerations are covered in extensive detail in Appendix A of this report.

Magnetic Design

Pole selection, turns and circuit selection, and flux densities were important factors in the PM generator design.

Pole selection was a trade-off between the number of poles and the physical size of the components. Also important was the pole pitch relative to both the cooling method and magnet size. A large pole pitch has a thicker back iron, which is inefficient to cool by a water jacket. Magnetic flux leakage and flux density levels are affected by the magnet size.

Turns and circuit selection were affected by drive compatibility and terminal voltage.

Flux densities were established at near saturation to minimize weight and cost.

Cooling Method

Environmental considerations, the available envelope, and trade-offs between performance and COE were important factors in selecting the cooling method. The cooling method must be both cost-effective and fit within the available envelope. Air-cooling requires additional volume for the vents, ducts, and blower, whereas the equipment for liquid cooling can be located in unused areas. Trade-offs between cost of equipment versus size and weight were evaluated.

Additional Losses

To ensure the performance (efficiency) and thermal stability of the generator, additional losses must be minimized. Included are losses associated with high frequencies (core losses increase with the square of frequency) and stray and eddy losses from additional support structures.

6.1.3 Design Methodology

Two separate paths were pursued during the initial generator design scoping exercises. EBGD created point designs for a matrix of generator designs, including the direct-drive and medium-

speed designs. The design data was input directly to Northern's Generator Cost Builder to estimate generator costs. Comprehensive Power developed a parametric generator-sizing model that was linked to Northern's Generator Cost Builder, described below in Section 8. This model enabled rapid design tradeoffs that were used to refine the system designs.

Using Northern's initial design requirements, General Dynamics Electric Boat (GDEB) created preliminary generator designs for the direct-drive, medium-speed/single-output (MS-1), and medium-speed/multiple-output (MS-X) drivetrain configurations. GDEB created a baseline design for each configuration, based on a specification of generator outside diameter and speed, and determined the rough weight and cost of each generator. The designs were revised based on feedback from the design team after initial gear designs were completed and mechanical layouts were generated. GDEB modified the generator designs (outside diameters, speeds, etc.) to reflect the revised design criteria and refined the weight and cost estimates of each generator. GDEB then refined the voltages, power factors, and cooling methods for the final generator designs. A complete description of the GDEB design process is described in Appendix A.

Medium-Speed Generators

Using Northern's initial design requirements, GDEB created preliminary generator designs for the medium-speed/single-output (MS-1) and medium-speed/multiple-output (MS-X) drivetrain configurations. Only liquid cooling was considered because generator size is constrained by the gearing envelope in these designs. GDEB created a baseline design for each configuration, based on a specification of generator outside diameter and rated speed, and determined the rough weight and cost of each generator. The designs were then revised based on feedback from the design team after initial gear designs were completed and mechanical layouts were generated. A complete description of the GDEB design process is described in Appendix A.

Direct-Drive Generator

EBGD created both air-cooled and water-cooled designs for the direct-drive generator based on Northern's specification for outside diameter and rated speed. A complete COE analysis was completed for these designs to determine the most cost effective design. GDEB then refined the voltages, power factors, cooling, and magnetic design for the final direct-drive generator design.

6.2 Power Converter

6.2.1 Power Converter Topology

Following are several commercially available power converter topology candidates for wind turbine drivetrains:

- Insulated gate bipolar transistor (IGBT) rectifier and inverter
- Diode rectifier–IGBT inverter
- Semiconductor controlled rectifier (SCR)–based topology.

Generator cost is about 40% higher with a diode rectifier or SCR-based power converter because of the restricted power factor for a given power, DC link voltage, and current. Also, diode rectifiers only support unidirectional power flow, whereas IGBTs support bidirectional flow, which is required for our baseline variable-speed wind turbine's doubly fed induction machine

generator. For these reasons, we selected the IGBT rectifier and inverter for the WindPACT project.

Motor-drive vendors provide IGBT-based power converter hardware in the form of regenerative drives. Although power converter hardware is applicable in test systems, lack of control flexibility can limit optimal operation of a PM generator. A control algorithm that helps reduce the size of the generator at the expense of the power converter is feasible and could lead to a lower system cost (Section 6.3).

IGBT power-converter hardware is unaffected by generator speed at typical frequencies for direct-drive and medium-speed wind turbines. The IGBT rectifier is referred to as an "active rectifier" to differentiate it from the traditional, diode-bridge rectifier. There is no difference in power-converter cost between the direct-drive and the MS-1 configurations with gearboxes. However, in the multiple-generator configuration with parallel power paths, each generator requires an active rectifier. A comparison of air- and water-cooling costs indicates that water-cooling is less expensive in the 1-MW power range when using switching frequencies greater than 2 kHz. On the basis of cost, we chose a water-cooled power converter.

Direct-Drive and MS-1 Configurations

Figure 6-5 shows the power converter for the direct-drive and MS-1 configurations.

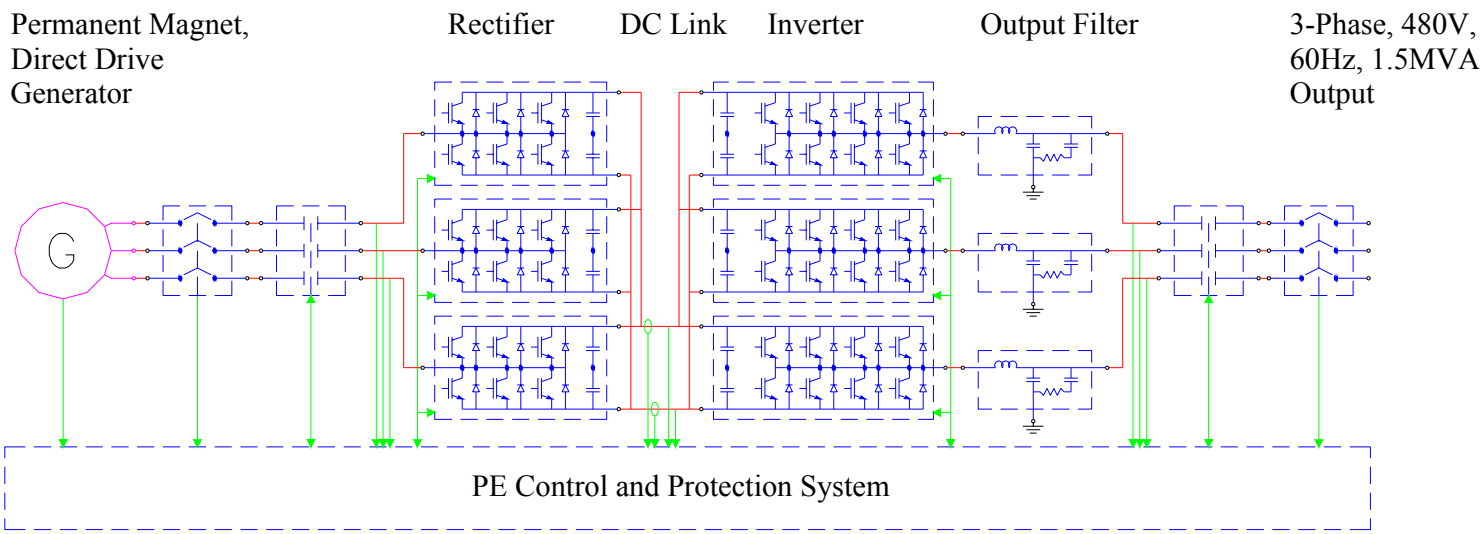

Figure 6-1. Power converter topology for direct-drive and MS-1 configuration.

The IGBT switches in the converter are built using parallel-connected modules. Three parallel modules are required for both the generator and grid-side converters. The cost of the IGBT bridge assembly includes gate drive, DC link capacitor, DC bus structure, current sensor, and water-cooled heatsink costs. Designed to meet IEEE 519 standards, the AC filter includes a damping network, which prevents resonance between the grid, the pad mount transformer, and the power converter filter. The power converter is assumed to operate into the grid at unity power factor. The generator power factor is assumed to be close to 0.9 at full load. A lower switching frequency for the generator-side power converter compensates for the higher conduction loss as a result of the poorer power factor, resulting in a symmetric IGBT topology for the grid-side and machine-side converters.

MS-6 Configuration

The power converter for the multiple-path configuration has a utility-side converter similar to that of a direct drive. The generator-side power converter is duplicated for each parallel path. Figure 6-6 shows the power electronics required for a six-path, parallel-drive configuration. Only the use of IGBTs on both sides was considered. Duplicating the generator-side converter increases the cost of the power electronics required by the multiple-path configuration.

The power converter cost for the multiple-path configuration increases with the number of parallel paths (Table 6-1).

Table 6-1. Estimated Power Converter Cost as a Function of the Number of Parallel Paths (1.5 MW and 3 MW)

Number of parallel paths	Cost (US$)
12	$182,600.00
6	$146,600.00
4	$136,900.00
3	$135,800.00
2	$129,800.00
1 (1.5-MW direct-drive, single-stage)	$120,800.00
1 (3-MW direct-drive, single-stage)	$179,904.92

Abbreviations: MW = megawatt; US = United States

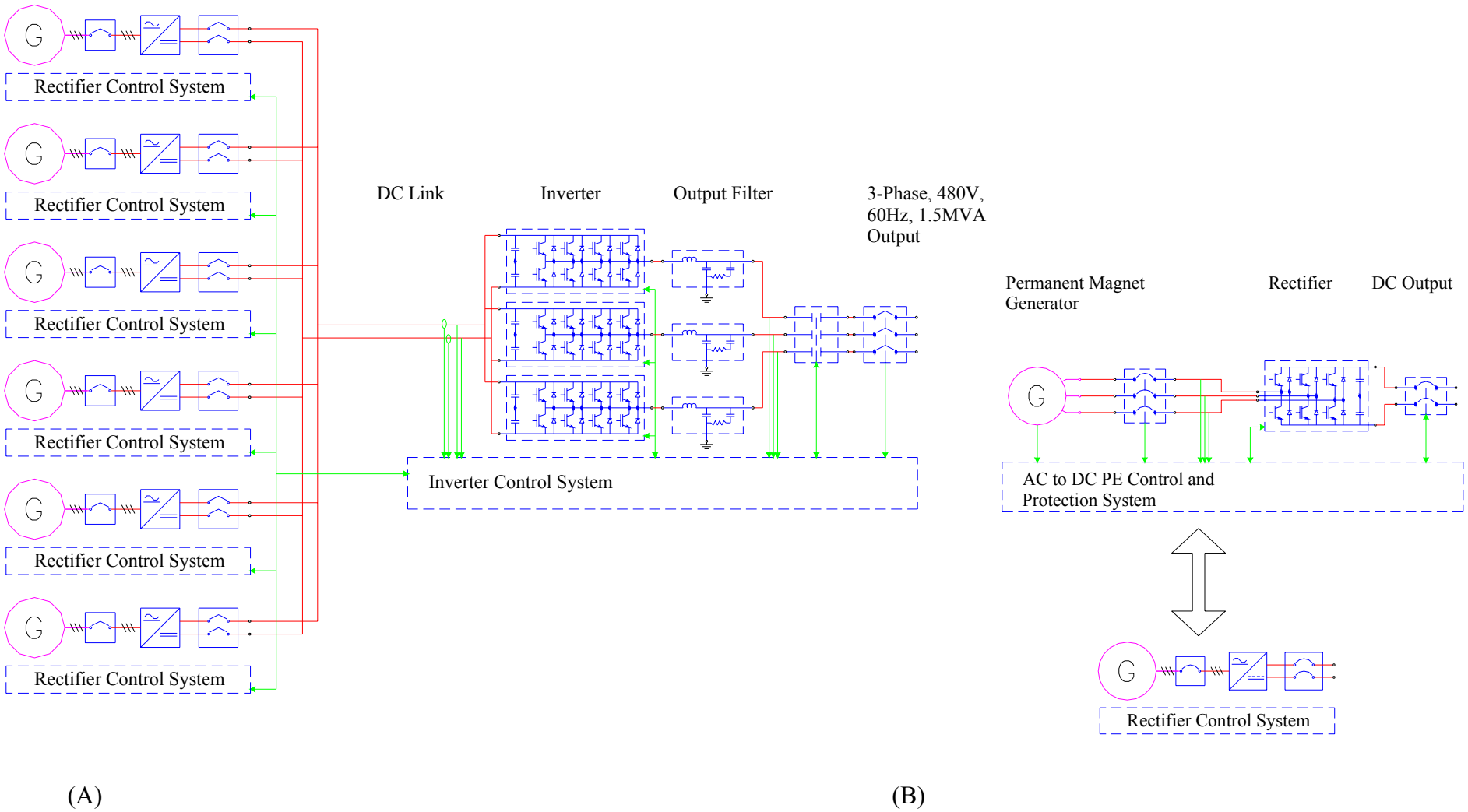

Figure 6-2. (*A*) Power converter for multiple-path configuration with six generators (*B*) Power converter for individual generator.

From the perspective of the power converter, the single-stage or the direct-drive configuration is most cost effective. However, modular operation of the generator and power converter in the multiple-path configuration can offer a minor improvement in reliability: if a fault occurs in one of the power paths, the wind turbine can continue to operate at a reduced power level. This minor advantage is a trade-off with the greater number of components in the multiple-path configuration. The power converter cost per kilowatt is less for the higher power 3-MW system (assuming the same voltage at the higher power level). A further reduction in cost might occur if the voltage level is increased at the higher power.

Estimated costs indicate that the direct-drive or single-stage configuration can be cost effective. Although the multiple-path configuration offers redundancy and modularity, the cost penalty is significant.

6.2.2 Drivetrain Voltages

The voltage rating for a given kVA power converter can impact system cost significantly. Once the voltage level is determined, the overall power converter specification can be established based on turbine power rating and control characteristics. The interface for the grid-side converter injects clean power into the grid at the unity power factor. Although beyond the scope of this report, additional grid or Microgrid® support can be specified for the control requirements on the grid-side converter.

To scale our design to a voltage based on the grid connection for a given wind turbine, we used a per unit (pu) notation to derive voltage ratings and tolerances for a direct-drive generator with back-to-back power converters. The per unit notation scales all the variables (voltage, current, power, impedance, etc.) to 1. When operating at values close to rated conditions, all the monitored variables are close to 1, making it easy to notice an error in the calculations during the design process if an answer turns out to be a very different number. In addition, it is easier to compare machine parameters in per unit notation as the impedances of different machines with different voltage and power ratings tend to be similar. This process is similar to non-dimensional numbers in fluid mechanics.

Grid Inverter Voltage

For the utility-side converter, the utility voltage specification is 1 ± 0.1 pu. The utility impedance is assumed to be less than 0.05 pu, which is typical of most grids. The dominant part of impedance is that of the pad mount transformer; therefore, the specification of the transformer must be integrated with the turbine design. The inverter filter impedance is less than 0.1 pu. We adopted this upper limit for filter impedance to limit the reactive power required by the filter. The maximum power converter continuous VA is 1.15 pu. Maximum reactive power is 0.5 pu, leading or lagging. At a high line voltage of 1.1 pu, the worst-case current required from the inverter is 1 / 1.1. At this current, the voltage across the filter and utility impedance is

$$1 / 1.1 \times j0.15 = j0.136$$

where j represents the imaginary component in complex number notation. The inverter output AC voltage needs to be $1.1 + j0.136$. The magnitude of the inverter AC voltage is 1.108 pu worst case. The minimum DC voltage at full power of the inverter is 1.645 pu ($1.108 \times 1.414 \times 1.05$) of line-to-line voltage. The 1.05 value is 5% duty cycle overhead for dead band limits, voltage drop in IGBTs, and control headroom. This overhead percentage assumes (1) the AC waveform is not clipped to obtain minimum harmonic distortion; (2) the inverter has a three-wire

connection; and (3) either the DC bus or the AC line is floating (not grounded). Neutral point modulation is required to minimize DC bus voltage.

It is possible to use a lower DC voltage, but waveform quality is affected. Figure 6-7 shows the trade-off between total harmonic distortion (THD) and sine-wave clipping that results from limiting DC bus voltage. IEEE 519 and other harmonic power quality specifications specify THD only at nominal operating voltage. If we allow the minimum DC voltage to drop to that required for low THD at nominal line voltage and then at high line voltage, the signal is clipped by 10%, which causes less than 4% THD. A good control loop, which does not wind up during clipping and recovers nicely after clipping, is required. Allowing 10% clipping at 10% high line voltage allows the DC voltage to be 1.48 pu (0.9 × 1.645) minimum. This clipping percentage increases the DC bus operating range, which improves efficiency of the generator and active rectifier.

The DC overvoltage rating determines the maximum operating range of the DC bus for the inverter and active rectifier. If the DC bus voltage is very high, the efficiency of the power converter decreases. IGBTs with a 1700-V rating are required for a nominal utility line-to-line voltage of 690. We chose 690 V because it is a standard grid voltage in Europe. Above this voltage level, power circuit components fall into the medium-voltage category and are more expensive. A power converter below 690 V leads to very large current rating. These IGBTs are recommended for use at DC bus voltages below 1200 V. In pu, 1200 V is 1.739 pu (1200 / 690). The minimum operating DC voltage is 1.48 pu; the maximum operating voltage is 1.74 pu. For 690 V line to line, the minimum and maximum operating voltages are 1021 V and 1200 V DC, respectively.

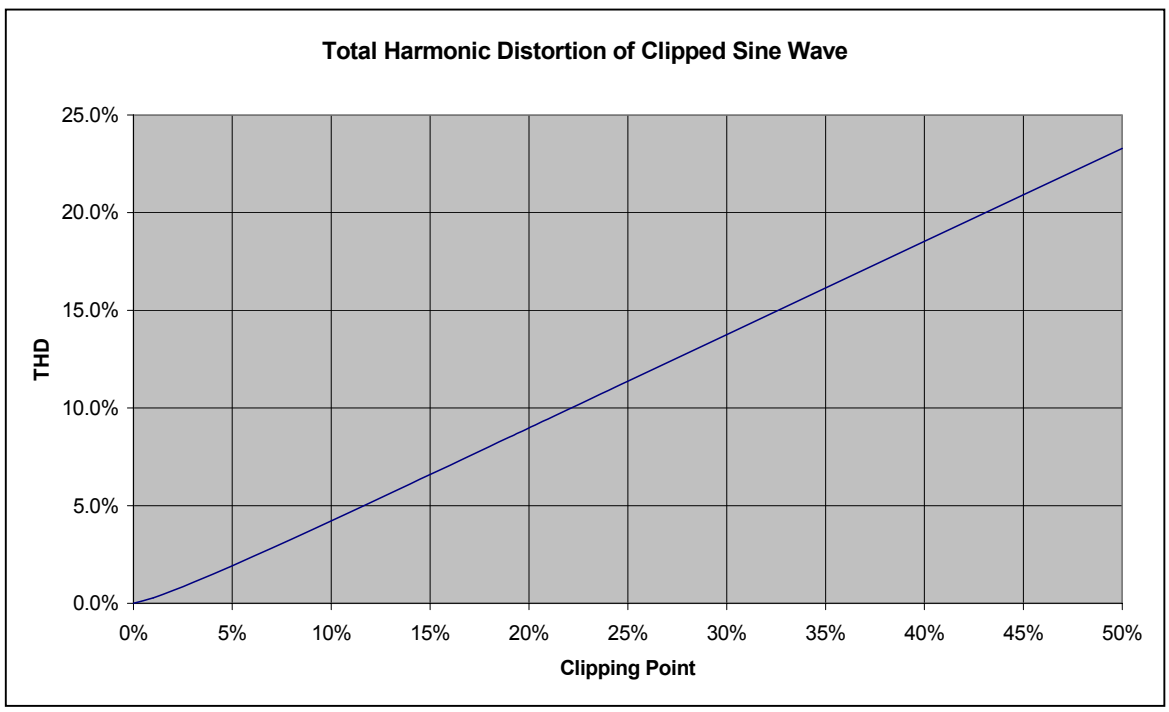

Figure 6-3. DC bus operating range.

If we use an active overvoltage clamp (dynamic brake) to limit the DC bus voltage and if this device is an IGBT 1700 V chopper, it must operate below 1200 V DC (1.74 pu). If we operate the active DC voltage clamp at 1200 V, we should be able to operate the inverter within 2% of 1200 V without losing much power to the voltage limiter (if it uses the same DC bus voltage sensing for its control). The voltage would be 1.705 pu (1.74 × 0.98).

Accuracy of the circuits that protect from overvoltage affects the choice of voltage. In the past, inverters needed to operate about 5% away from the overvoltage trip point to prevent false trips. Accuracy of the overvoltage setting also affects the choice of voltage. The IGBTs are not overly sensitive to the exact DC voltage; if the overvoltage trip point is set 6% above the overvoltage rating (allowing 1% accurate overvoltage tripping), the IGBTs can operate at the maximum voltage rating without false overvoltage tripping.

When the generator is operating at maximum speed and the inverter trips, the DC bus voltage rises if there is no other load on the DC bus. It is assumed that the no-load voltage limit of the IGBTs is 1700 V (2.46 pu). We must ensure that the DC bus voltage never exceeds this voltage. In the generator design (E_q = 1.0, X_d = 0.8, X_q = 1.2) at 15% over speed, the open-circuit voltage is 1.15 (1.0 × 1.15) relative to the nominal generator terminal voltage at rated power and speed. (Note that Eq = 1.0 implies that at rated speed and at no load the terminal voltage is 100%, so there are no additional increases in voltage beyond 115% as a result of loss of load, or 15% overspeed.) This corresponds to the maximum DC bus voltage, so the maximum open-circuit DC bus voltage is 2.4 pu (1.15 × 1.74). This is just sufficient as long as we ensure that the IGBTs are never gated on or off when an overvoltage above 1.74 pu exists. In general, this should not happen if the overvoltage (brake-chopper) circuit limits the voltage.

Active Rectifier Voltage

Because the active rectifier and the inverter share the DC bus, their two voltages need to match. Using the pu voltage relative to the nominal AC utility voltage, the DC bus voltage for the active rectifier is between 1.48 and 1.705 pu. This voltage corresponds to an active rectifier AC line-to-line voltage of V_{dc} / 1.414 / 1.05 for no distortion attributable to voltage limitation. These DC bus voltage numbers are from 1 pu to 1.148 pu AC generator terminal voltage relative to AC line voltage. From the perspective of the generator, we set the pu voltage at any point in this range. For the minimum reactive power and conduction loss (highest efficiency), the rated speed should be at the top of the range to allow the terminal voltage to drop at the lower speed. Attempting to use the entire operating range risks missing the optimum operating point because of tolerances in generator design and manufacture. The selected design uses a terminal voltage of 1.05 pu ([2 + 1.148] / 3), which is at the center of the range using a weighing factor of 2 for 1 pu. In other words, the generator rated terminal voltage should be 1.05 × nominal utility AC voltage, or 724.5 V (1.05 × 690).

6.2.3 Power Converter Specifications

After determining system voltage levels, we can establish detailed power converter specifications. A 10% service factor is included for a dynamometer test drive to ensure the generator can be tested fully within its power range.

Figure 6-8 is a simplified block diagram of our proposed drivetrain configuration. It provides 1.5 MW at the utility grid, nominally 690 V AC. Two power-conversion bridges, controls, and AC

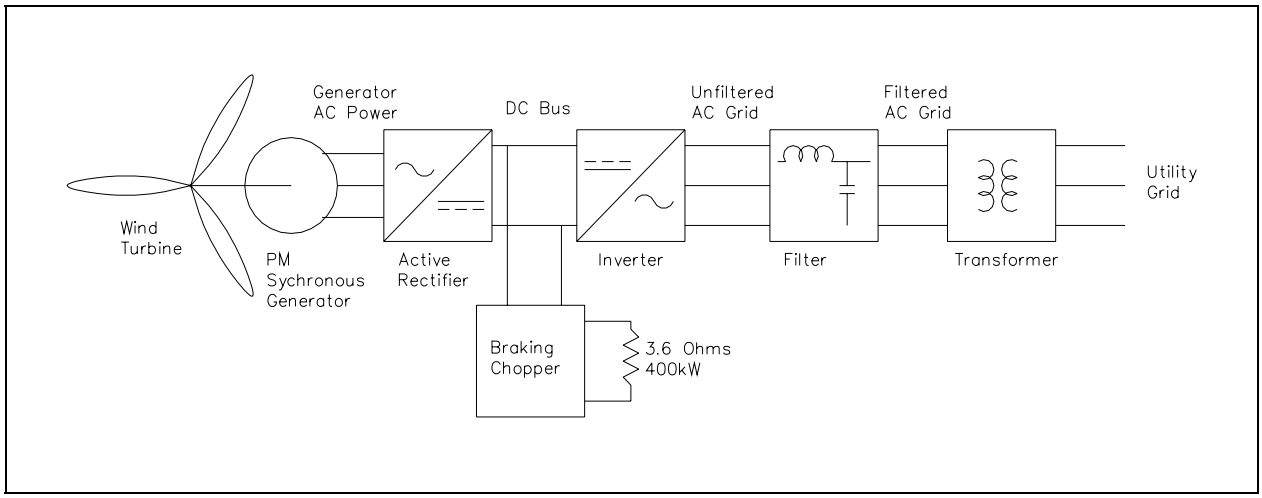

Figure 6-4. Block diagram of drivetrain for power converter specification.

filters are specified. Components are the active rectifier, brake chopper, inverter, filter, and switchgear.

The power converter specification (Tables 6-2 through 6-6) is for testing the generator on the dynamometer at NREL's National Wind Technology Center in Boulder, Colorado. The power converter is sized to operate the generator at 10% over rated power at nominal speed and terminal voltage.

High-Level Control

The power converter controller receives run/stop signals from the turbine controller (master-slave system) through dedicated digital input/output (I/O) to the converter. Torque command to the PM synchronous generator (PMSG) is based on speed measurements with an update rate of at least 10 ms. A serial link connects the standard industrial programmable logic controller (PLC) master controller to the converter.

The active rectifier must be able to operate the machine at maximum torque per ampere over the power curve until the terminal voltage of the machine reaches the limit of the active rectifier, when it must limit terminal voltage while the machine continues up the power curve (Figure 6-9). Table 6-2 shows selected points of the power curve.

The inverter provides real power to the grid while regulating the DC voltage. This control is based on the power curve, which is effectively grid kW versus DC bus voltage or, simply, a DC voltage control with a proportional gain.

Using the power converter specifications, we looked for a standard power converter from drive suppliers and requested quotes from component suppliers. Standard drive hardware is available in the power range described above for the test system. However, standard drive hardware precludes using optimized control algorithms to reduce the cost of the generator. For the dynamometer test, our drivetrain configuration will use the conventional six-switch power converter with control flexibility to utilize optimal algorithms.

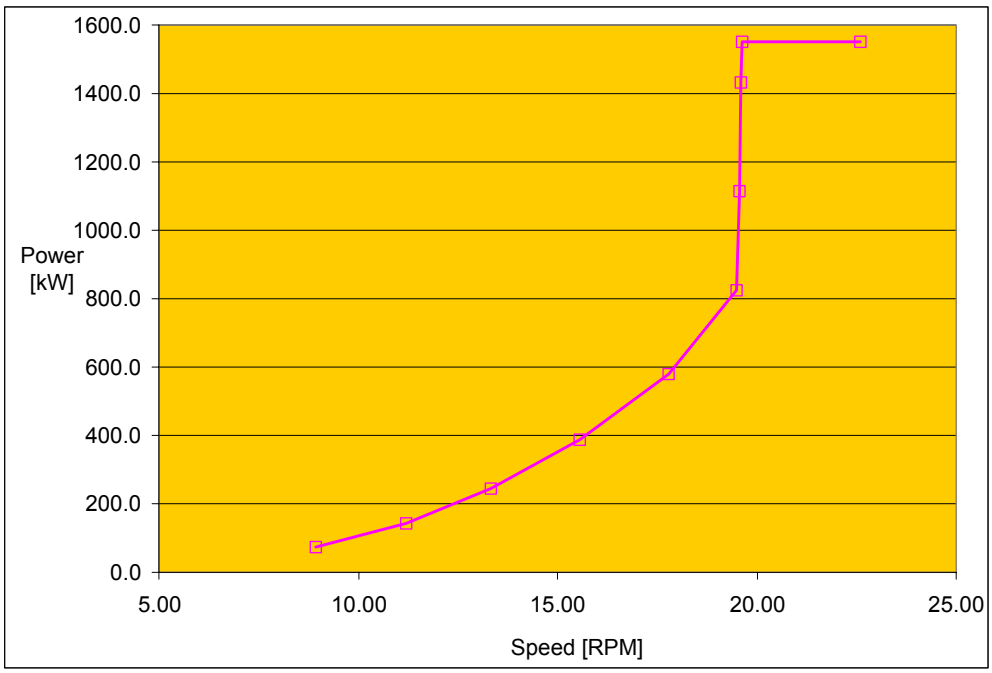

Figure 6-5. Nominal turbine power curve.

Table 6-2. Nominal Wind Power Curve

rpm	kW[a]
8.95	72.3
11.19	141.1
13.34	243.9
15.57	387.6
17.79	578.6
19.18	823.1
19.37	1113.1
19.57	1430.7
19.65	1550.0
22.60	1550.0

[a]Voltage at generator terminals
Abbreviations: kW = kilowatt; rpm = rotations per minute

Table 6-3. Generator

Attribute	Description
Type	Multiple-pole synchronous
Nominal power	1.550 MW
Nominal apparent power	1700 kVA
Terminal voltage	725 V
Excitation	Magnet; 56 poles
Rotor speed	19.65 rpm
Number of phases	3
dv/dt limit	6000 V/μs, 1500 V peak

Abbreviations: dv/dt = rate of change of voltage with respect to time; kVA = kilovolt ampere; MW = megawatt; rpm = revolutions per minute; V = volt; V/μ = volts per microsecond

Table 6-4. Generator-Side Active Rectifier Bridge

Attribute	Description
Cooling	Air or water
Ambient temperature	20–50C°
Enclosure	NEMA 12
Relative humidity	0%–95% noncondensing
AC terminal voltage at rated	690 V, +10%, −15% V rms
Rated real power (nominal +10%)	1.705 MW
Rated continuous apparent power (nominal +10%)	2100 kVA
Rated AC current (nominal +10%)	1750 A rms
Minimum frequency at rated current	9 Hz

Abbreviations: A = ampere; C = centigrade; kVA = kilovolt ampere; MW = megawatt; NEMA = National Electrical Manufacturers Association; rms = root mean square; V = volt

Table 6-5. Inverter Bridge

Attribute	Description
Cooling	Air or water
Ambient temperature	20–50C°
Enclosure	NEMA 12
Relative humidity	0%–95% noncondensing
AC terminal voltage at rated	690 V, +10%, –15% V rms
Rated continuous real power	1650 kVA
Power factor	1.0
Rated AC current	1375 A rms
Operating frequency	60 Hz
Harmonic current content (TDD)	5% maximum
Switching harmonic current ripple	2% maximum

Abbreviations: A = ampere; AC = alternating current; C = centigrade; Hz = Hertz; kVA = kilovolt ampere; NEMA = National Electrical Manufacturers Association; rms = root mean square; TDD = total demand distortion; V = volt

Table 6-6. Brake Chopper

Attribute	Description
Cooling	Still air (no fan)
Ambient temperature	20–50C°
Enclosure	NEMA 12
Relative humidity	0%–95% noncondensing
Power for 5 s	400 kW
Peak current	350 A

Note: Brake chopper controls must operate when utility power is off
Abbreviations: A = ampere; C = centigrade; kW = kilowatt; s = second

6.3 Gearbox

Some of the preliminary design tradeoffs and costing information that led us to choose certain gearbox technologies are described below. In particular, we chose the following technologies for our designs:

- Helical compound planetary/parallel for the Baseline design
- Helical compound planetary for the MS-1 design
- Helical parallel for the MS-6 design.

6.3.1 Design Methodology

Multiple Output

This configuration uses helical parallel shaft gearing. We devoted significant effort to determining the optimum number of generators for the multiple-generator designs. We studied configurations using 2, 3, 4, 6, and 12 generators. Figure 6-1 lists the steps followed to develop the multiple-output gearing drives.

Single Output

As Section 4 notes, a number of technologies are available for the single-output configuration. The rationale for choosing compound planetary helical technology for the baseline and MS-1 designs is described below.

In the technology assessment, GCSC found that all available options for the 1.5-MW class had a three-planet planetary gear for the low-speed stage and a two-stage, parallel-shaft gear that composed the total 72/1 ratio. GCSC compared a compound planetary with a single-stage, parallel shaft gear with a simple planetary with a two-stage parallel-shaft gear.

Assumptions for Generator Spacing

1) The interface for the slip-ring mechanism to control the propeller blades has a 12" diameter.

2) The spacing between adjacent generators must be at least 2".

Steps in Developing a Gearbox Arrangement

1) Using the above assumptions for generator spacing, determine the minimum center distance for the pinion and gear.

2) Using the minimum center distance and ratio, determine the pitch diameter for the pinion and gear.

3) Using the load and a face width equal to the pinion pitch diameter calculate the K-factor and compare it to a typical allowable K-factor.

4) Selecting standard pitches, determine the options for the numbers of teeth.

5) Check the unit load for the pitch options to select the design pitch.

6) Using typical allowable K-factor and unit load values, select a design face width.

7) Run GearTech AGMA218 for the nominal load and a 1.3 application factor to calculate the gear stresses and the gear lives for the nominal load.

8) Run GearTech AGMA218 for the duty cycle using Miner's Rule to calculate the gear stresses and the lives using a 1.0 application-factor. This assumes that the duty cycle includes any required application factors.

9) Adjust the gear geometry to get the life required.

10) Repeat items 7 and 8.

11) Complete the bearing design for the pinion.

12) The bearing design for the gear is independent of the generator arrangement for equally spaced multiple generators.

Figure 6-6. Steps in developing multiple-output gearing drives.

Following are the differences between simple planetary and compound planetary gears:

- A simple planetary gear has three meshes that share the load only for the low-speed mesh. The two-stage parallel shaft gear has one mesh for each stage.
- With the compound planetary, two stages with three meshes share the load, and only the lighter-loaded, high-speed stage is limited to one mesh.
- Two planes of gears with three meshes that share the load provide a higher power density than one stage with three meshes that share the load.
- With a simple planetary gear, the planet gear experiences reverse bending, which requires de-rating the planet gear by 30%.
- With a compound planetary gear, neither planet gear sees reverse bending; therefore, no de-rating is required.
- With a compound planetary gear, the carrier is longer, which extends the spacing between the two bearings on the carrier compared with the spacing in a simple planetary gear utilizing a two-bearing configuration. This increased spacing allows a more lightly loaded second bearing, leading to lower cost bearings.

In the Cincinnati Gear's compound planetary gear, the sun pinion and ring gear float on splines to ensure the three meshes in each plane share the load equally. The carrier is mounted on bearings that support the rotor load, part of which is carried by the spherical roller pillow block on the main shaft (in the case of modular designs). For the single-bearing designs, two different approaches were considered for supporting the carrier, and are discussed in Section 6.

In the helical version of the compound planetary gear, the helix angles differ so that the thrust developed by the helix angle at the low-speed planets is equal in magnitude and opposite in direction of the thrust developed by the helix angle at the high-speed planet.

In general, the gear and bearing dimensioning followed the steps outlined for the multiple-output designs.

6.4 Results of Preliminary Drive Investigations

Because we are attempting to minimize the "drive unit" cost, Figure 6-2 shows the combined costs for gearing, generators, and power electronics. Of the multiple-output designs, the six-output, 14:1 configuration is the most cost-effective, with the two-output configuration (a double-helical design) a close second. Note that the 1/8, 1/10 and 1/12 configurations are simple planetary systems, while the 1/13.89 is a compound planetary (and the Baseline design.)

Of the multiple-output drives, the six-output, 8:1 drive has the smallest envelope (defined as the smallest circle that will encompass the outside diameter [OD] of the generators), and the three-output configuration has the lowest weight (Figures 6-3 and 6-4).

Of all configurations, the planetary single-output designs are the least expensive and, of those, the compound planetary designs are the most advantageous from a cost standpoint. The compound planetary designs also have the smallest envelopes and lowest weights.

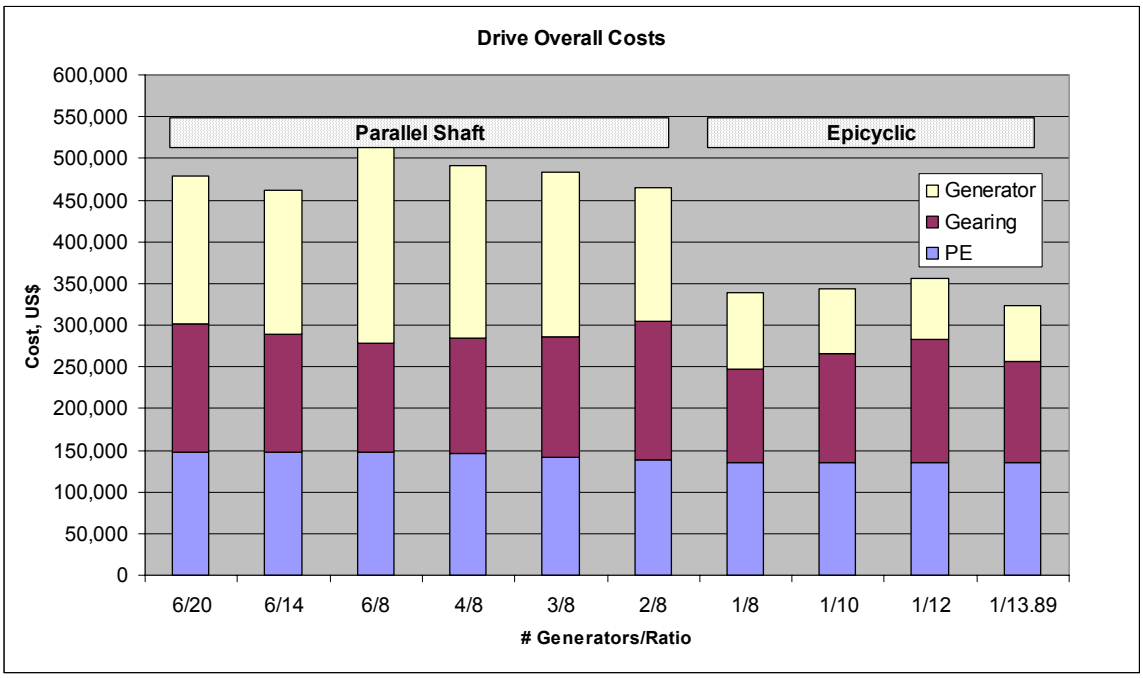

Figure 6-7. Overview of gearbox and associated drive costs.

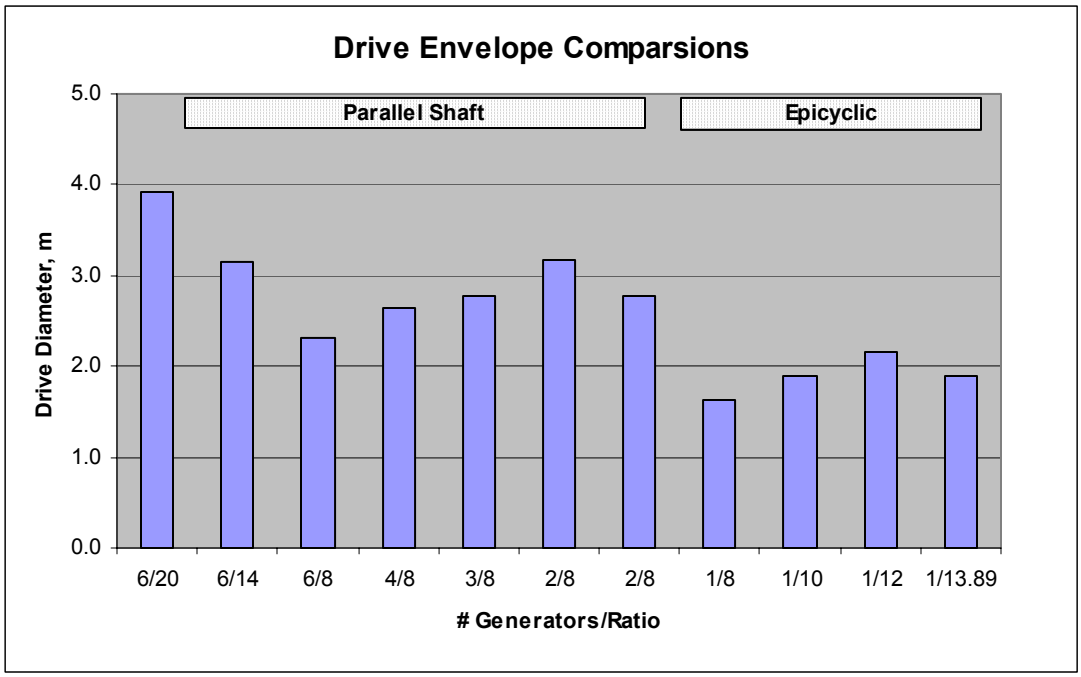

Figure 6-8. Drive envelope comparison.

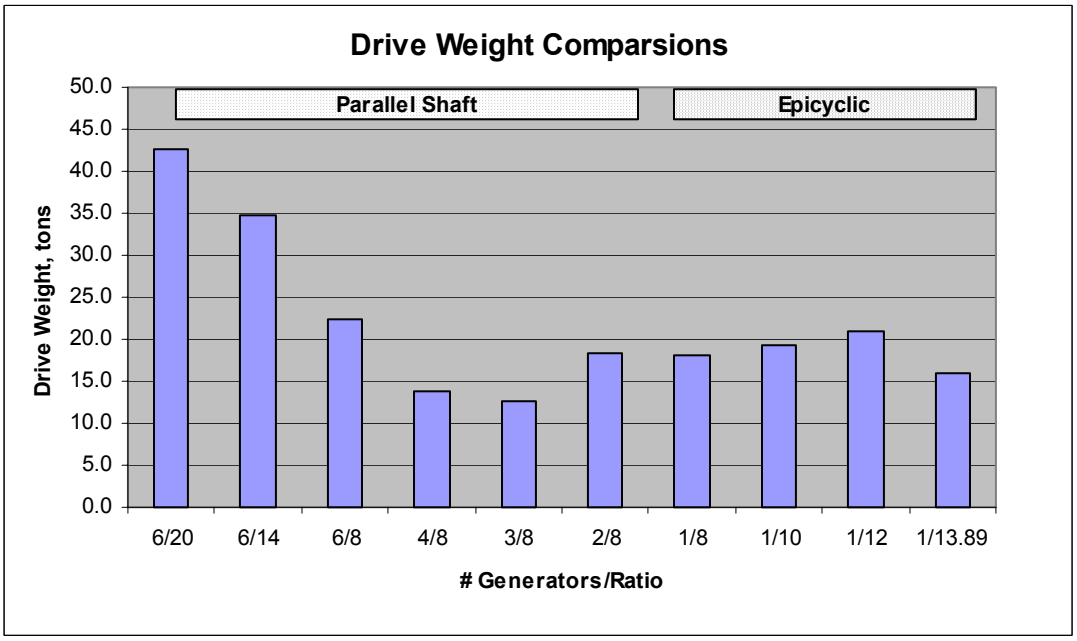

Figure 6-9. Drive weight comparison.

7 Drivetrain Designs

Following are the design criteria considered during the development phase of each drivetrain configuration:

- Simplicity of design
- Reliability
- Serviceability
- Ease of manufacture
- Ease of assembly
- Logistics
- Weight.

7.1 Baseline Design

The baseline design is based on the GCSC compound-planetary/parallel-shaft helical gearbox, industry-standard doubly fed wound rotor induction generator and power electronics package (Figure 7-1).

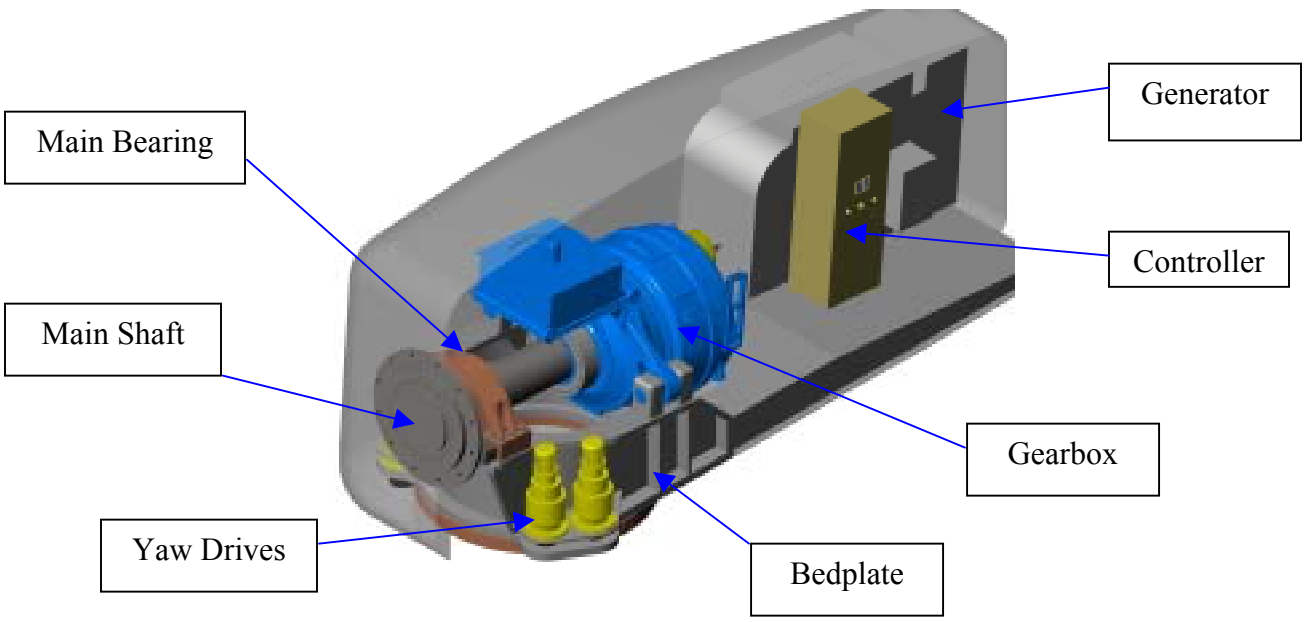

Figure 7-1. A 1.5-MW 70-m baseline design.

The rotor hub drives the gearbox through a modular main shaft–bearing arrangement, with shrink disk–style coupling at the gearbox input. The main bearing is a pillow block-mounted, double-row, spherical bearing. Compliant elastomer mounts support the gearbox. The gearbox drives the generator through a flexible coupling. The generator system, which includes the generator rotor slip rings and heat exchanger, is also flexibly mounted. Provisions are made for a slip ring that feeds the blade pitch system. Rotor loads are taken by the main bearing and gearbox mounts into the bedplate weldment.

7.1.1 Gearing

Designed according to a major manufacturer's specifications, the original gearbox had a compound planetary input section and parallel output stage. The compound system was chosen over a conventional planetary arrangement because it was less expensive and lighter, as shown in Section 7.3.1. The original design, which used spur gearing, was improved to include helical gearing during Phase I of the WindPACT project. Helical gearing has become the industry norm because of its lower noise and better load-carrying capability, leading to a more compact gearbox. The estimated cost for the new gearbox design is less than the original design.

Figure 7-2 shows the solid-model image of the 1.5-MW compound helical gearbox.

The 3-MW gearbox is also based on GCSC planetary helical technology. Figure 7-3 shows a section of the 3-MW gearbox.

Figure 7-2. A 1.5-MW compound planetary helical gearbox.

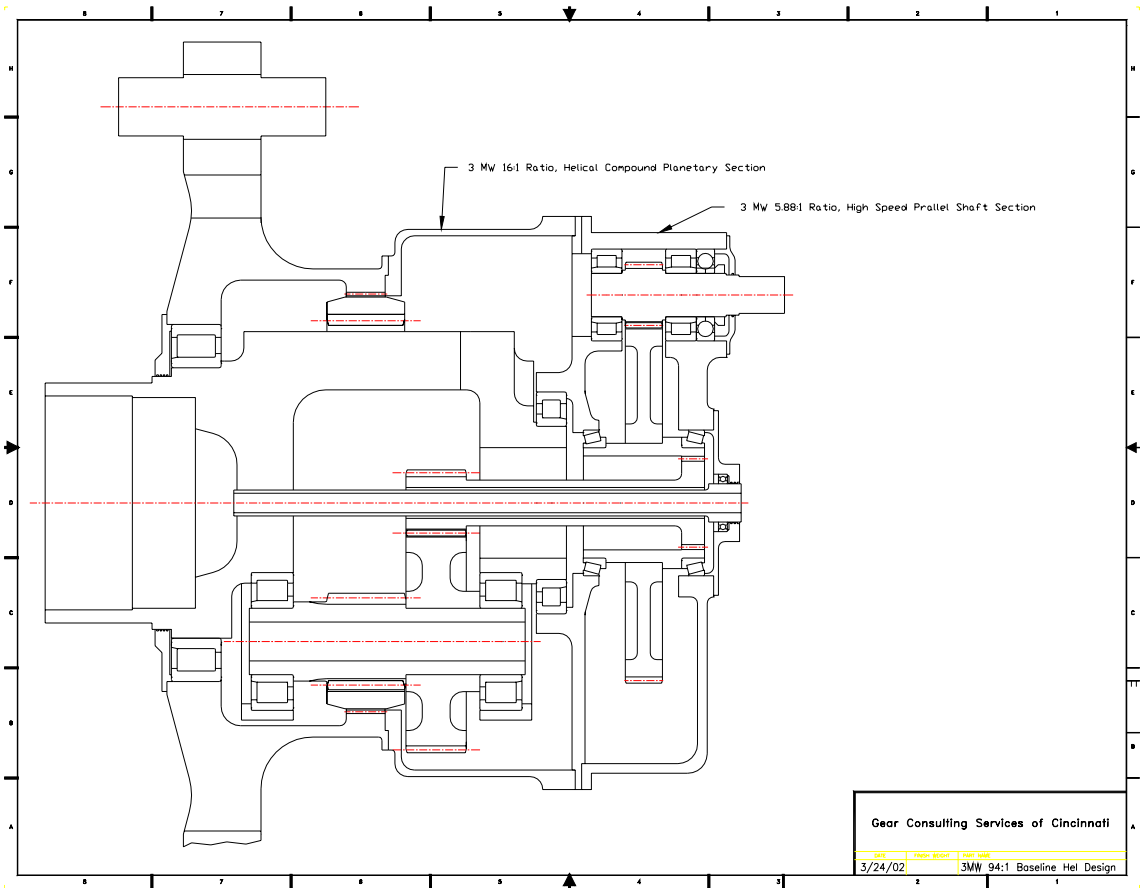

Figure 7-3. A 3-MW compound planetary helical gearbox.

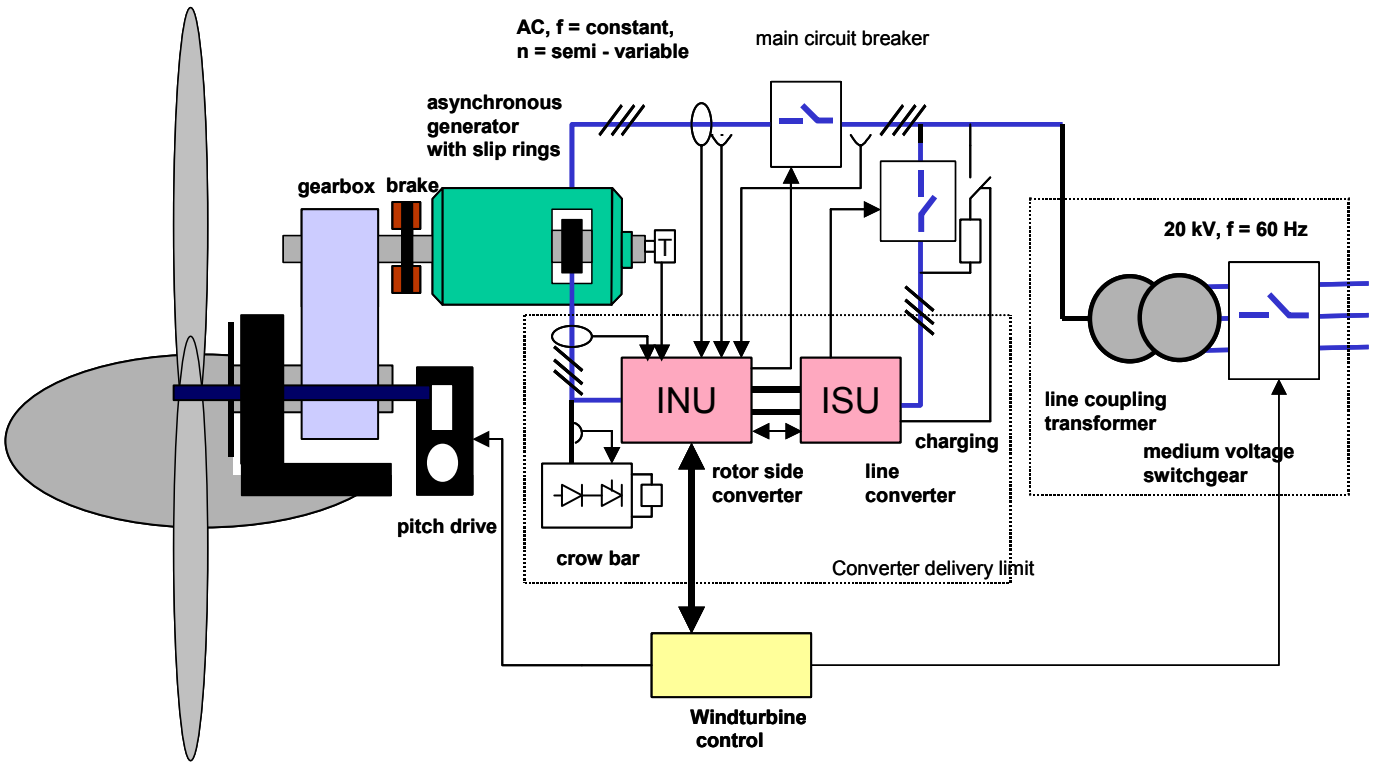

Figure 7-4. Power converter one-line.

7.1.2 Generator and Power Converter

Developed by a major manufacturer, the generator and power converter are an industry-standard design. Figure 7-4 shows the schematic for the baseline doubly fed induction machine.

Bedplate

The bedplate weldment is composed of a front section, which supports the main bearing, shaft, and gearbox and transmits rotor loads to the tower, and a rear section, which supports the generator and ancillary hardware. A bolted joint connects the two sections.

Main Shaft

The main shaft has a forged flange that connects to the rotor hub and accommodates the rotor-locking ring. The opposite end of the shaft interfaces with the gearbox input. They are joined by a shrink disk–style connection.

Main Bearing

A double-row, spherical main bearing is mounted in a pillow block. Rotor lock pistons are integrated into the pillow block feet and are actuated by a hydraulic hand pump.

Flexible Coupling

A flexible coupling is mounted between the gearbox and generator. The coupling includes an integral brake disk, mechanical overload protection, and provides electrical isolation.

Brake

The spring-applied, hydraulically released caliper brake is used primarily as a parking brake. Its hydraulic control system allows programming the brake torque for smooth stops.

Figure 7-5 shows details of these drivetrain components.

The structural configuration of the bedplate was based on an industry leader's design. Finite element analysis (FEA) was used to qualify the design under fatigue and extreme loads cases. Figure 7-6 shows the FEA analysis under the governing extreme loads case.

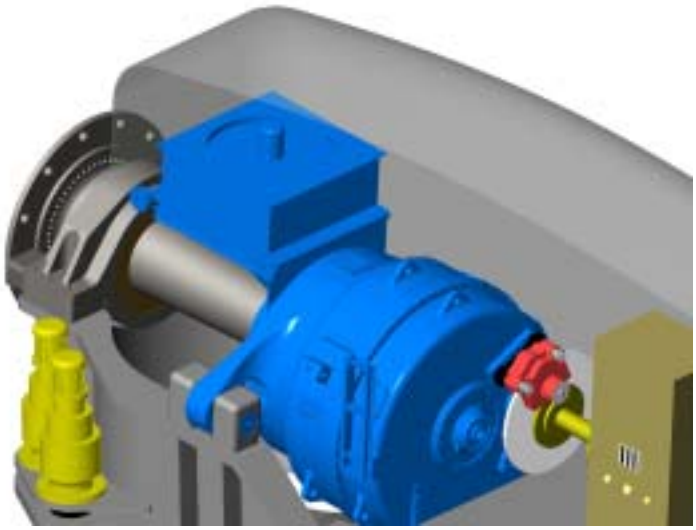

Figure 7-5. Baseline drivetrain detail.

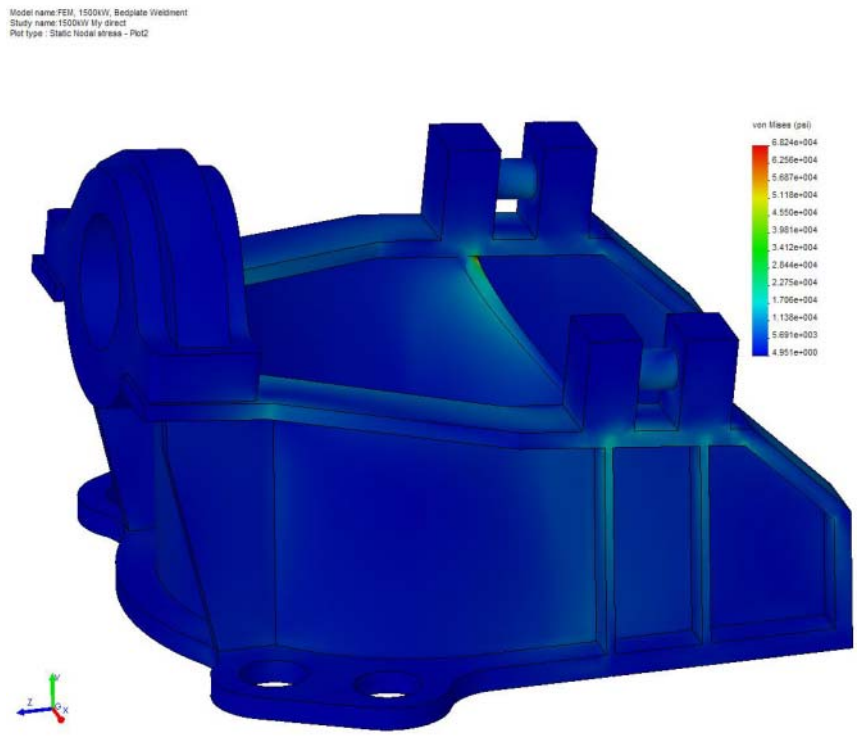

Figure 7-6. FEA of bedplate.

Our costing of the baseline design was verified by a major European wind farm developer. The baseline design could be further investigated and optimized:

- The bedplate was designed as a welded structure; however, a cast bedplate might be lighter and more economical.
- An integrated design might be less costly, but component lifting/service considerations might offset any gains.

7.2 Permanent Magnet Direct-Drive Design

The permanent magnet direct-drive (PMDD) design is based on liquid-cooled PM-synchronous generator technology. The generator design essentially determines the design of the drivetrain (Figure 7-7).

7.2.1 Generator

Mechanical Layout

The generator is composed of a single main bearing, stator and rotor electromagnetics, water jacket, spindle, stator ring and frame, brake system, and associated hardware. The rotor hub and generator rotor are connected directly to the outer race of the main bearing. The inner race of the main bearing is pressed onto the spindle. The stator frame is connected to the base of the spindle, and the stator ring is fastened to the stator spider, composed of eight arms. The spindle is bolted to the turret, which provides the structural path to the tower top. Composed of four calipers, the brake system acts on the generator's rotor disk. A slip ring, which feeds the blade pitch system, and a rotor lock are provided.

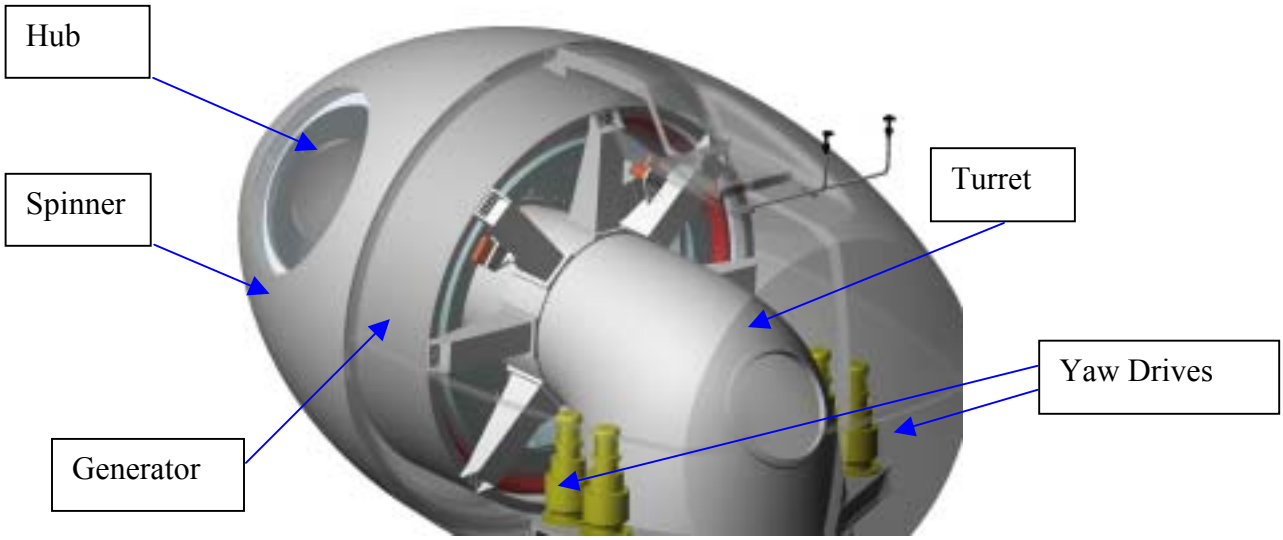

Figure 7-7. PMDD drivetrain.

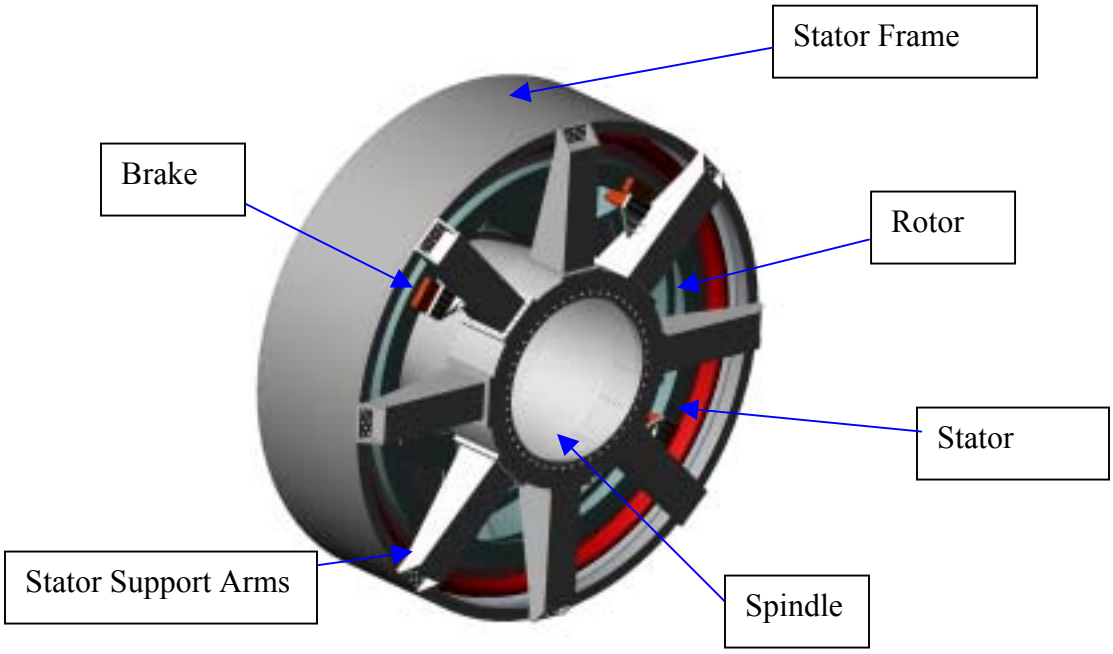

Figure 7-8. PMDD generator.

In our PMDD design, the generator is an integrated unit, which makes it possible to ship a fully assembled and tested generator to the site. There it can be mounted to the turret in one operation. Another feature of the design is the capability to lock the generator rotor to the stator frame, which allows servicing the main bearing without removing the generator from the tower. Bearing seals are accessible, and the design allows repairing or replacing the seals without removing the bearing.

Figure 7-8 shows the unitized generator assembly.

Main Bearing

The single-bearing design simplifies the design of the generator. It allows a direct load path, simple assembly, and ease of service. A unitized component, the main bearing is a two-row, tapered roller with integral seals and an automatic lubrication system. The rotor hub is fastened to the outer race of the bearing. The inner race is pressed onto the spindle.

Spindle

The cast-iron spindle is the main load path from the rotor to the turret. It carries all rotor and generator loads, and its fixed design takes advantage of the lower fatigue loads in the stationary frame. The dimensions of the bearing and spindle allow a crawl-through feature: service technicians can access the rotor pitch system through the center of the spindle. The bearing seals are also easily accessed.

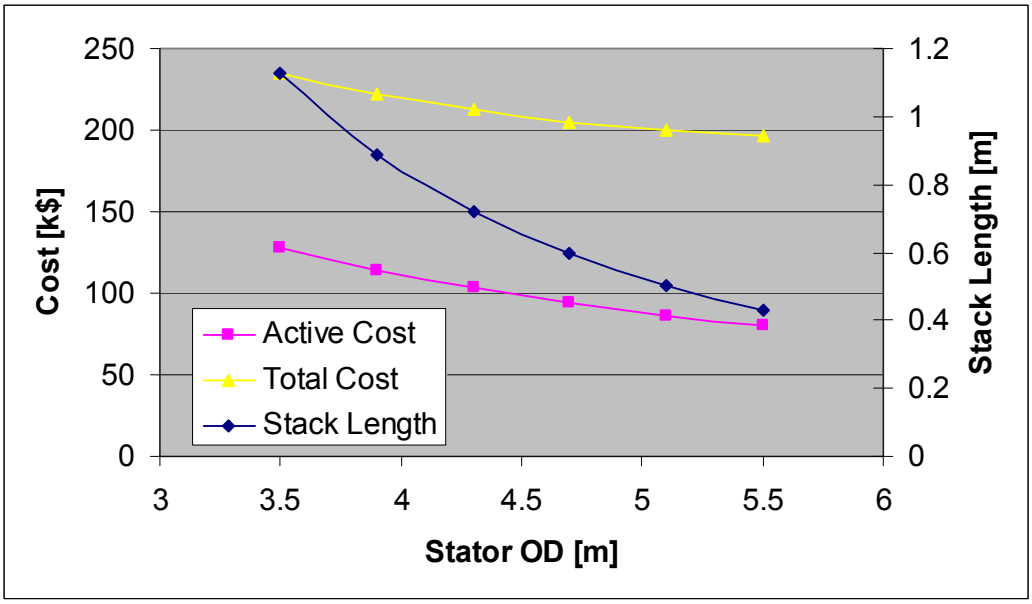

Figure 7-9. Generator costs.

Stator Support

The stator structure is a weldment consisting of the outer ring and eight tapered arms.

Brake

The parking brake acts through the generator rotor hub drum. The calipers and rotor lock, which acts between the generator rotor and stator support, are mounted off the stator support arms.

Outside Diameter and Cooling Method

For the PMDD generator, two critical factors are outside diameter (OD) and cooling method.

Outside diameter. Figure 7-9 shows generator costs relative to the OD of the generator. Although the rationale for increasing the diameter is clear, returns diminish above approximately 5.5 meters, primarily because of the increased number of poles, fixed costs of coil fabrication, and to a lesser extent, increased structural costs. We produced specifications for two PMDD generators: one for the European market and one for the American market.

For the European market (and Phase II design), we chose a liquid-cooled generator with a 4-m OD. Based on a Danish shipping specification, the diameter is the largest practicably transported in Europe.

For the American market, we chose a liquid-cooled generator with a 5.3-m OD. We found that this increase in diameter lead to a 6.6% reduction in generator cost. For long hauls within the United States, the low-cost mode of transportation is barge and rail. A major shipping agent informed us that a load shipped by rail with an overall height of 6 m could get within 50 miles of 95% of U.S. sites. Considering the rail truck height, we arrived at our overall diameter specification of 5.3 m. For loads of this size, a rail-mounted arrangement, which allows transporting the generator vertically with its rotation axis perpendicular to the direction of travel, will resolve any transportation issues.

Cooling method. The cooling method affects both capital costs and efficiency. To determine the best choice, the capital cost and COE for each design must be compared. For a given diameter, a liquid-cooled generator can be made more compact and with lower magnet mass. Efficiency can be sacrificed to reduce the magnet mass—with a loss in annual energy production. Generally, an air-cooled generator must be made more efficient to ensure adequate heat rejection—at the expense of higher active materials mass. The PMDD generator is a water-cooled design based on a trade-off among natural air, forced air, and water. Figure 7-10 compares efficiencies, and Table 7-1 shows the results of our trade-off study.

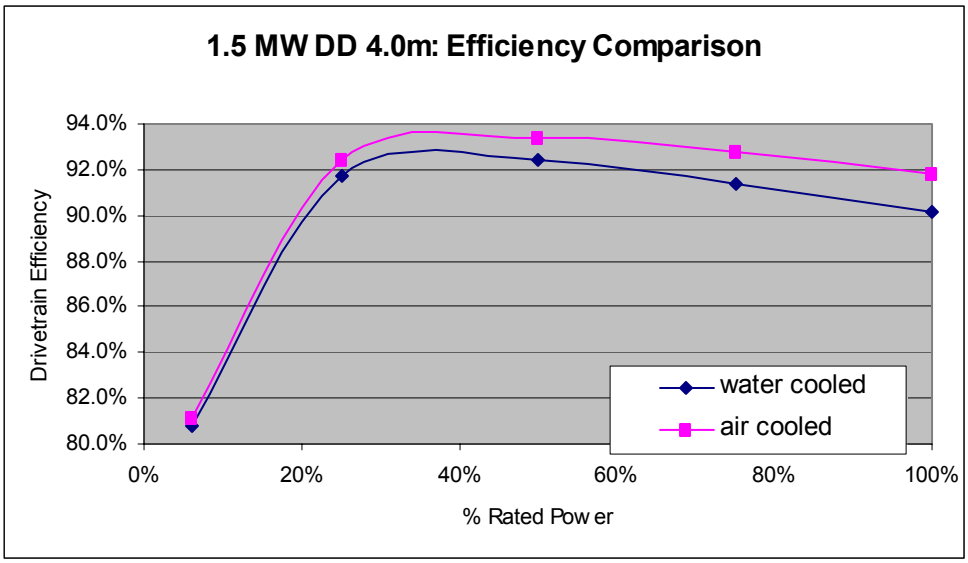

Figure 7-10. Drivetrain efficiency comparison.

Table 7-1. Cooling Method Tradeoff in 1.5-MW PMDD Generator

	Water-cooled	Air-cooled
Production cost	$1,100,289	$1,139,365
Profit margin	15%	15%
Purchase price	$1,265,332	$1,310,270
Balance of station cost	$247,500	$247,500
Initial capital cost	$1,512,832	$1,557,770
Fixed charge rate	10.56%	10.56%
Annual operation and maintenance cost	$20,315	$20,315
Annual energy production	4,872,746 kWh	4,903,269 kWh
Cost of energy	3.70¢/kWh	3.77¢/kWh

Abbreviations: kWh = kilowatt hour

Table 7-2. PMDD Generator Specifications

Rating	1.5 MW	1.5 MW	3 MW
Generator OD	4.0 m	5.3 m	5.3 m
Stator OD	3.79 m	4.82 m	5.0 m
Air gap mean diameter	3.48 m	4.46 m	4.46 m
Generator speed	19.65 rpm	19.65 rpm	15.3 rpm
Number of poles	56	78	78
Voltage	725 V	725 V	725 V
L/D ratio	0.19	0.11	0.26
Cooling method	Liquid	Liquid	Liquid

Abbreviations: m = meter; MW = megawatt; L/D = length-to-diameter; OD = outside diameter; rpm = rotations per minute; V = volt

Because of the higher capital cost and cost of energy of the more efficient air-cooled design, the liquid-cooled design was chosen. Table 7-2 shows the PMDD generator specifications, the basis for the detailed design in Phase II of the WindPACT project.

7.2.2 Power Converter

Figure 7-11 shows the power converter required for the direct-drive design. (The same hardware configuration for power electronics is required for the MS-1 design.) The power converter consists of an IGBT-based active rectifier on the generator side of the DC link and a conventional IGBT-based inverter on the utility side. The high current ratings required by the power converter IGBTs are achieved by using parallel devices.

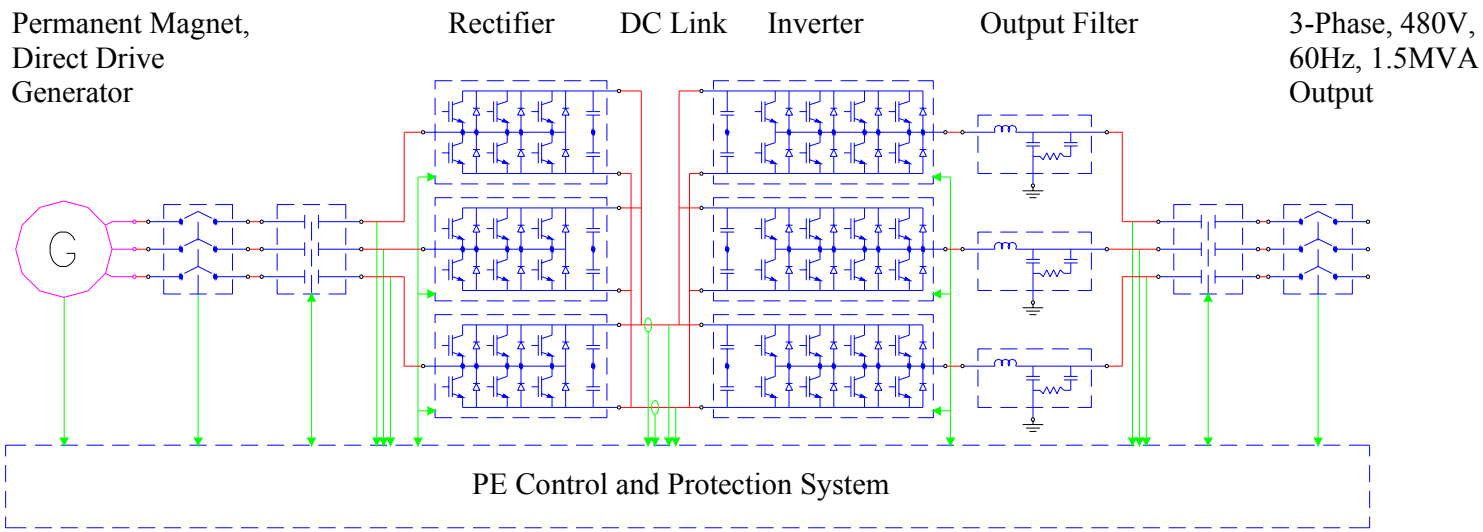

Figure 7-11. PMDD (and MS-1) power electronics schematic.

7.2.3 Structural Design

Rotor moment loads are transmitted to the spindle through the main bearing races and into the turret, yaw bearing, and tower top. Rotor torque loads are transmitted directly into the generator rotor spider, across the air gap, through the stator and frame, and back into the spindle base, turret, and yaw bearing. Figures 7-12 and 7-13 show the FEA of the turret and spindle.

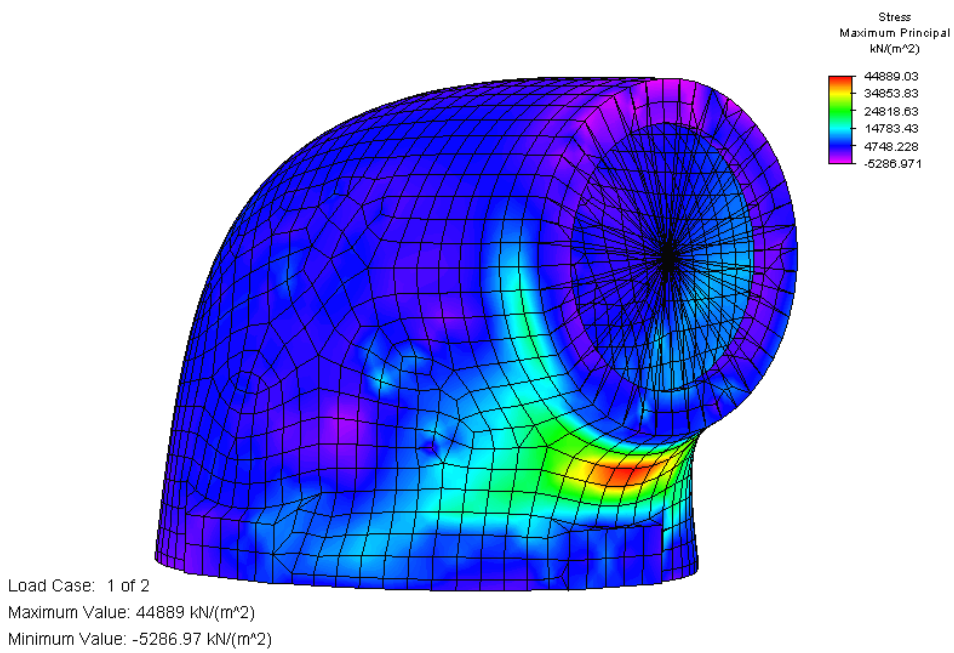

Figure 7-12. FEA of turret.

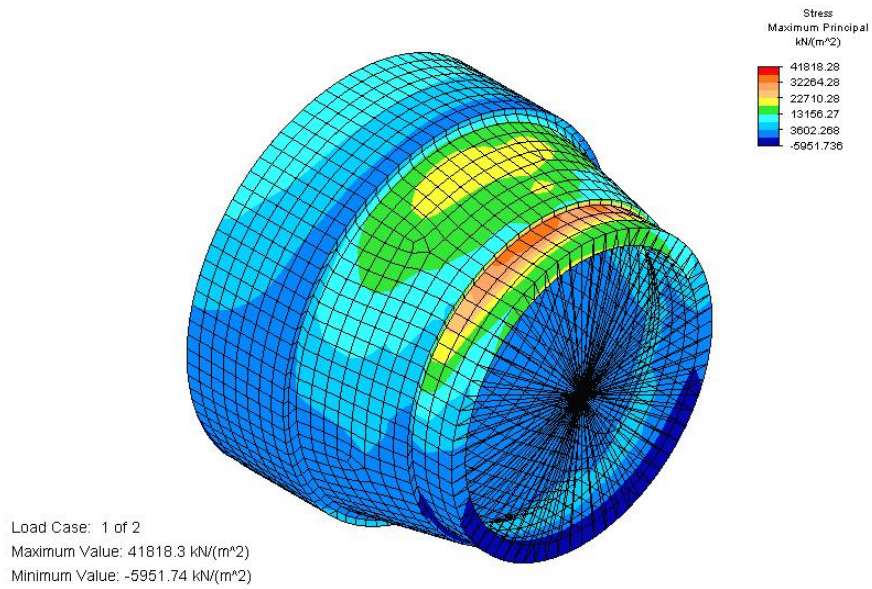

Figure 7-13. FEA of spindle.

7.2.4 Alternative Direct-Drive Configurations

We investigated a number of bearing configurations during the course of the Phase-1 activities. The main tradeoff was between systems using one and two bearings. The two-bearing class offers many possibilities, with a main tradeoff being the choice of a non-rotating axle or rotating shaft. Bearings can be in front of, straddled, or behind the generator. En route to choosing the single-bearing stationary-spindle configuration (Configuration 1-A), alternative configurations were studied (Figure 7-14).

Evaluation criteria were cost, weight, risk, shipping, assembly, and serviceability. Solid models were created of all of the designs with the exception of 2-D. Preliminary sizing calculations were performed to estimate the masses of the various structural components, and specific costing data were used to estimate the costs of each configuration. Technical risks, shipping, and serviceability issues were also evaluated.

Configuration 2-A was eliminated on weight and cost. The design allows the generator to be assembled and shipped as a unit and has desirable service features, but the high weight of the bedplate structure and shafting caused high costs. Configuration 2-B was eliminated based on assembly constraints. In this design, shipping of the generator as a unit becomes problematic. Configuration 2-C was eliminated as a result of its non-optimal load path and attendant high weight. Version 2-D was also eliminated based on shipping concerns. Configuration 2-E was second runner up – the generator can be assembled, tested, and shipped as a unit, and the cost and weight of this design rivals that of the single-bearing design. Configuration 1-A was chosen because of its lower part count and ease of bearing service.

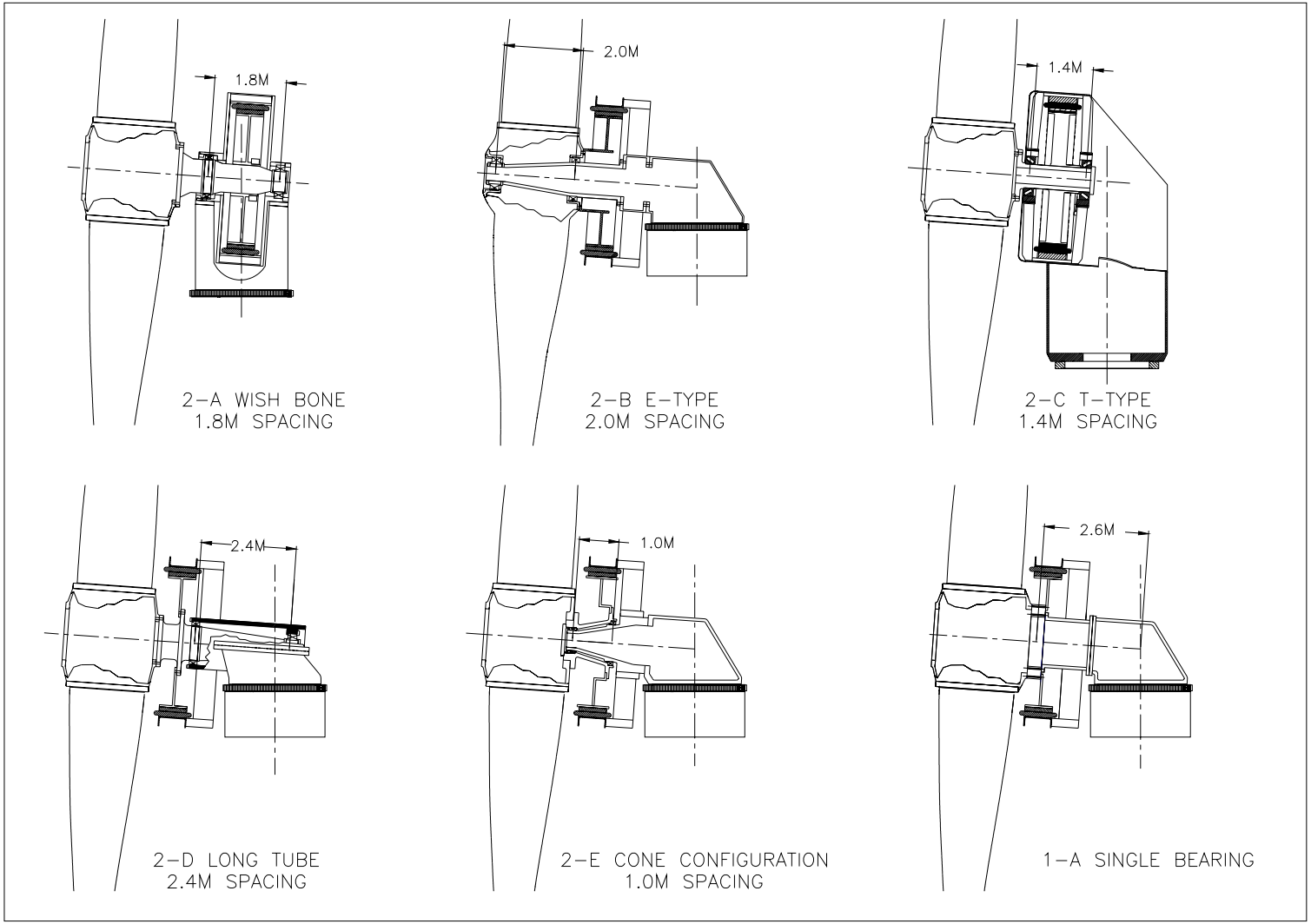

Figure 7-14. Alternative direct-drive configurations.

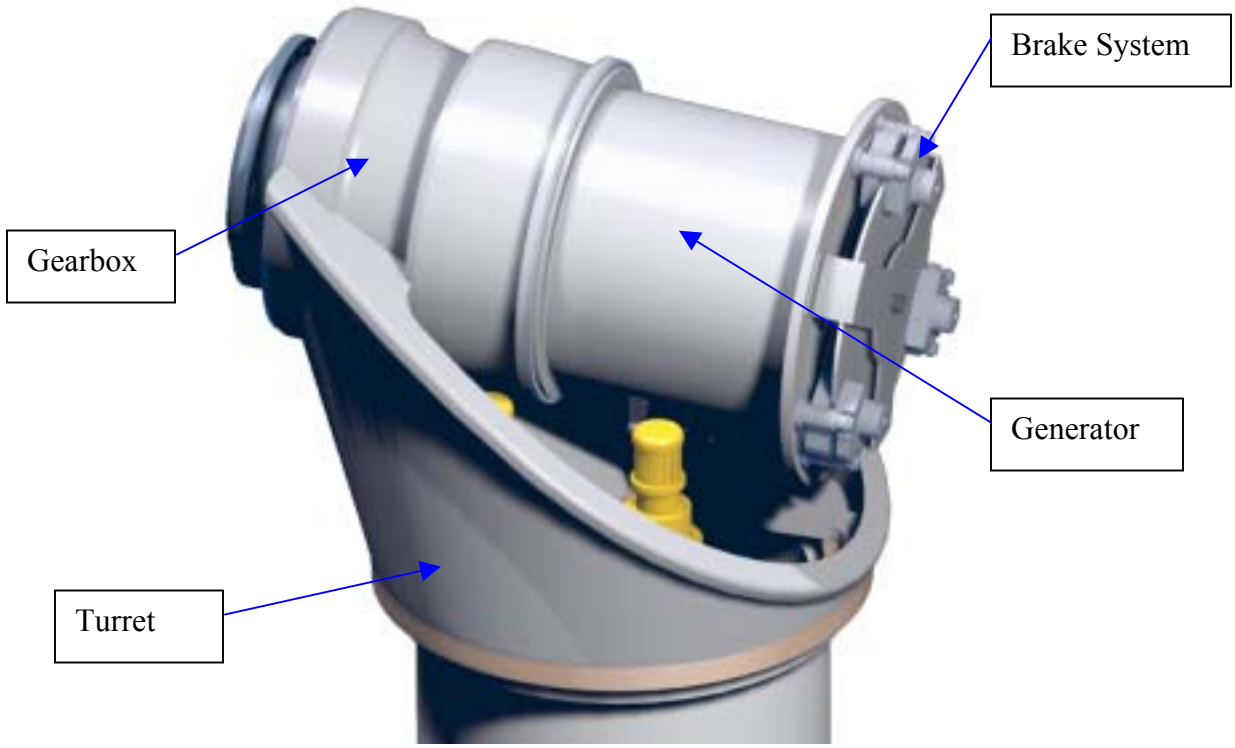

Figure 7-15. MS-1 drivetrain design.

7.3 Medium-Speed/Single-Output Design

The medium-speed/single-output (MS-1) integrated design is composed of a compound planetary helical gearbox coupled with a medium-speed PM generator. The front section of the gear casing is integrated with the tower top structure (Figure 7-15).

The drivetrain is composed of the compound planetary helical gearbox, medium-speed generator, turret, and brake system. The rotor hub is connected directly to the inner race of the main bearing. The inner race of the main bearing is mounted to the gearbox carrier, and its outer race to the gearbox casing. The generator is mounted to the gear case using flanges on the gearbox and generator housings. The turret design brings the moment loading of the turbine rotor directly from the main bearing into the turret structure, with minimal impact on the gear alignments. Located on the back of the generator, the brake system is composed of a brake disk, calipers, and hydraulic system. A slip ring, which feeds the blade pitch system, is provided.

7.3.1 System Design

We compared simple epicyclic gearboxes at three ratios at the 1.5-MW level with compound epicyclic gearboxes (Figures 7-16 and 7-17). The cost and weight advantages of the compound epicyclic design are apparent. In addition, the compound planetary design has fewer bearings and does not impart reversed bending on the planet gears. By these measures, the drivetrain employing the compound helical gearbox is superior to simple epicyclic gearboxes.

Table 7-3 shows the MS-1 drivetrain specifications.

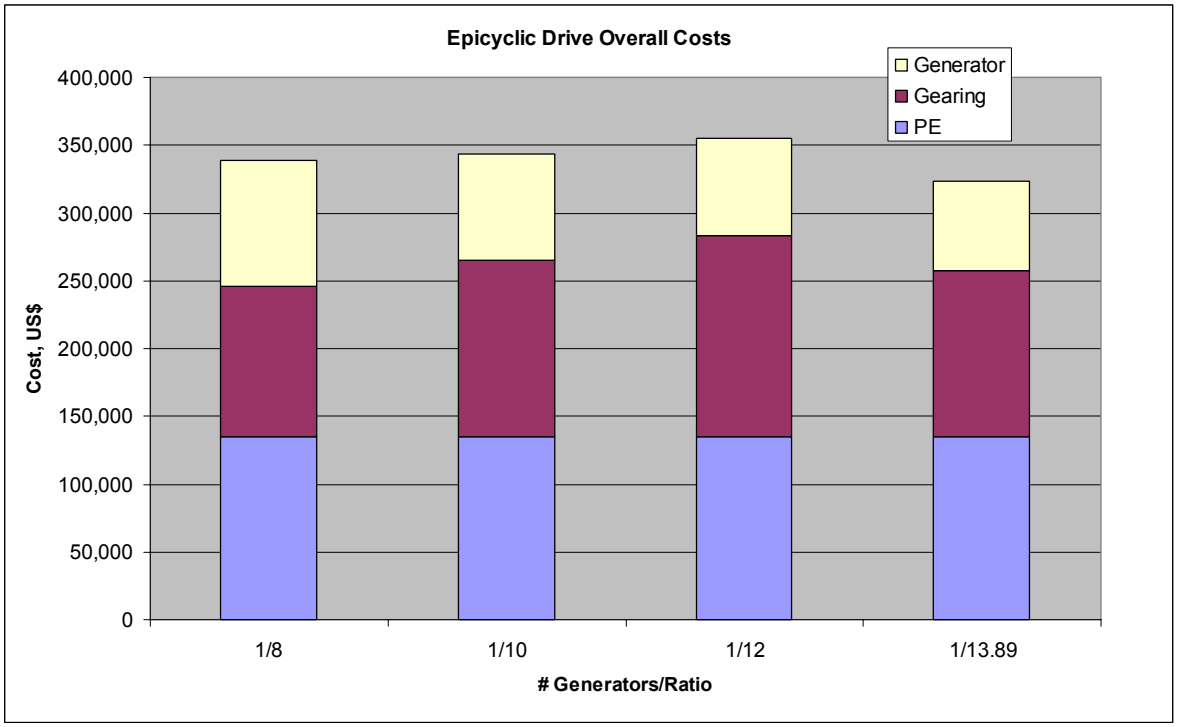

Figure 7-16. Epicyclic drive cost comparison.

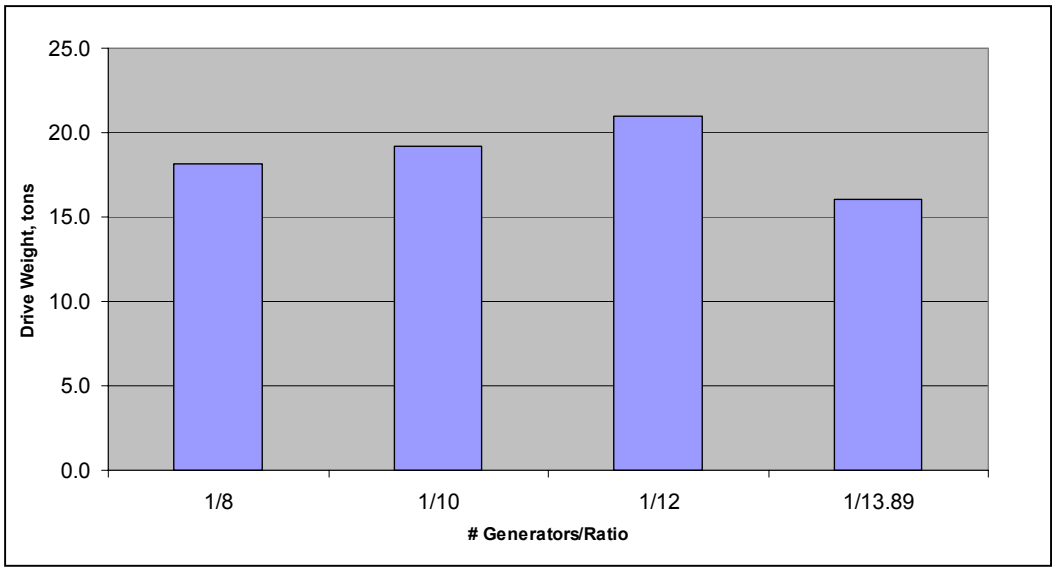

Figure 7-17. Epicyclic drive weight comparison.

Table 7-3. MS-1 Drivetrain Specifications

Power rating	1.5 MW	3 MW
Gearbox type	Compound epicyclic	Compound epicyclic
Gear ratio	13.89:1	16:1
Ring-gear pitch diameter	1.09 m	1.43 m
Generator speed	272.9 rpm	244.8 rpm
Generator cooling method	Liquid	Liquid

Abbreviations: m = meter; MW = megawatt; rpm = rotations per minute

7.3.2 Gearing

The MS-1 gearbox is based on the GCSC compound planetary helical gear technology. The GCSC compound box gives a high ratio—13.89:1 for the 1.5-MW gearbox and 16:1 for the 3-MW gearbox. The technology is ideal for the application because of its high gear ratio, low part count, and balanced internal bearing loads. The compound helical design gives a double reduction with one set of pinion bearings and allows balancing the bearing thrust loads by carefully selecting opposing helix angles. A high ratio is very advantageous because the cost of a PM generator depends greatly on generator speed.

Among integrated designs, we compared the saddle mount and overhung mount carrier configurations. We chose the overhung mount configuration because it eliminates one bearing. However, either could be implemented for roughly the same cost. For more detail, see Appendix H.

Table 7-4 shows the MS-1 gearbox specifications. Figure 7-18 shows a section view of the 1.5-MW drivetrain.

Table 7-4. MS-1 Gearbox Specifications

Rating	1.5 MW	3 MW
Gear ratio	13.89:1	16:1
Ring-gear pitch diameter	1.09 m	1.43 m
LS mesh face width	0.222 m	0.305 m
LS mesh helix angle	8.75°	8.75°
HS mesh face width	7.5	7.5
HS mesh helix angle	19.25°	19.25°

Abbreviations: HS = high-speed; LS = low-speed; m = meter; MW = megawatt

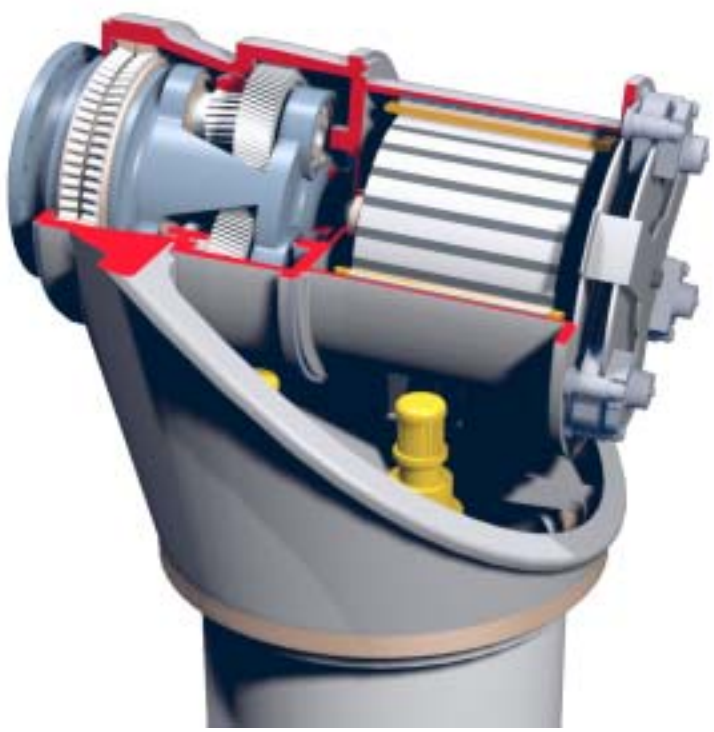

Figure 7-18. A 1.5-MW MS-1 (gearbox and housings cutaway).

7.3.3 Generator

Mechanical Layout

Totally enclosed, the generator's cast-iron housing contains the water jacket and stator. The generator rotor is supported by two bearings whose outer races are mounted in the housing. Flange-mounted to the gearbox, the generator can be removed as a unit. The rear flange mounts the brakes. Figure 7-19 is a section view of the generator.

Electrical Design

The MS-1 design is based on GDEB's liquid-cooled PM generator technology. The mechanical design of the turret accommodates a large generator. We conducted a study to determine the most effective generator diameter.

Figure 7-20 displays the dependence of generator cost on stator OD. To reduce the cost, we chose a 1.8-m OD. (Figure 7-15 shows an earlier incarnation of the MS-1 design, which used a generator of a different diameter. The final costing is based on the 1.8-m generator.)

Table 7-5 shows the MS-1 generator specifications.

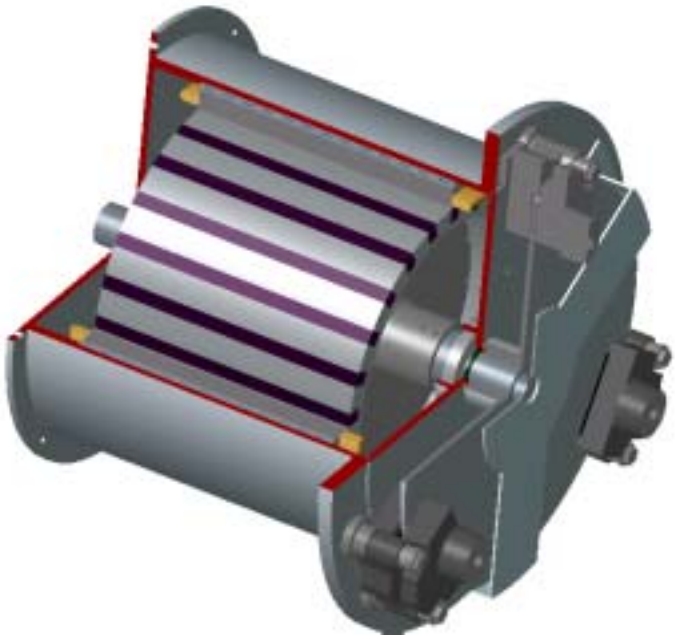

Figure 7-19. MS-1 generator section view.

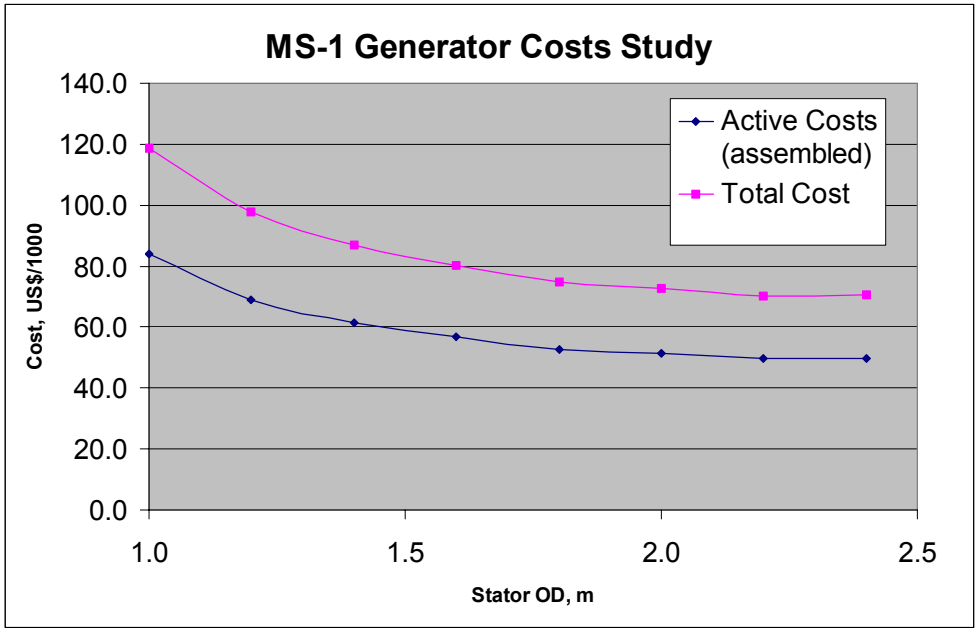

Figure 7-20. A 1.5-MW MS-1 generator cost versus diameter.

Table 7-5. MS-1 Generator Specifications

Rating	1.5 MW	3 MW
Generator OD	1.450 m	2.526 m
Stator OD	1.76 m	2.36 m
Air gap mean diameter	1.48 m	2.026 m
Generator speed	273.6 rpm	244.8 rpm
Number of poles	28	84
Voltage	725 V	725 V
L/D ratio	0.35	0.38
Cooling method	Liquid	Liquid

Abbreviations: m = meter; MW = megawatt; L/D = length-to-diameter; OD = outside diameter; rpm = rotations per minute; V = volt

7.3.4 Power Converter

Figure 7-21 shows the power converter configuration required for the MS-1 design. (The same power converter configuration is required for the PMDD design.) The high current ratings required by the power converter IGBTs are achieved by using parallel devices.

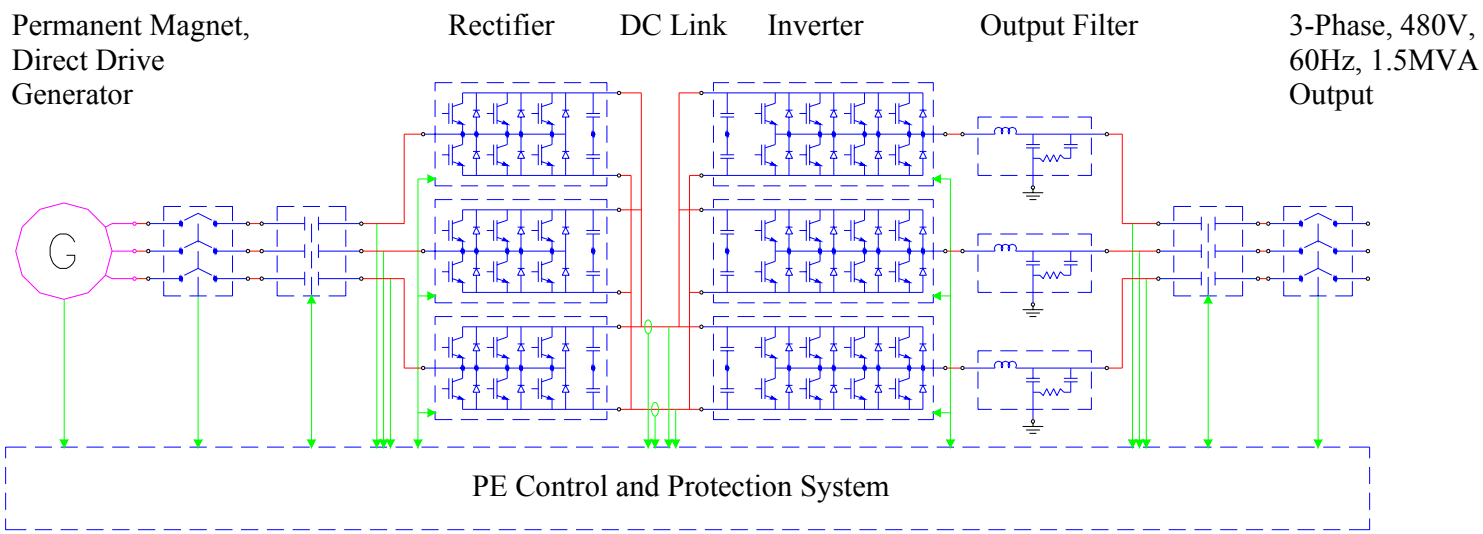

Figure 7-21. MS-1 (and PMDD) power electronics schematic.

7.3.5 Structural Design

We conducted an FEA of the turret and forward gear casing to prove the integrity of the design. Figure 7-22 shows the stresses under a unit load case. These results were used to develop unit load functions, which were in turn used in the fatigue analysis.

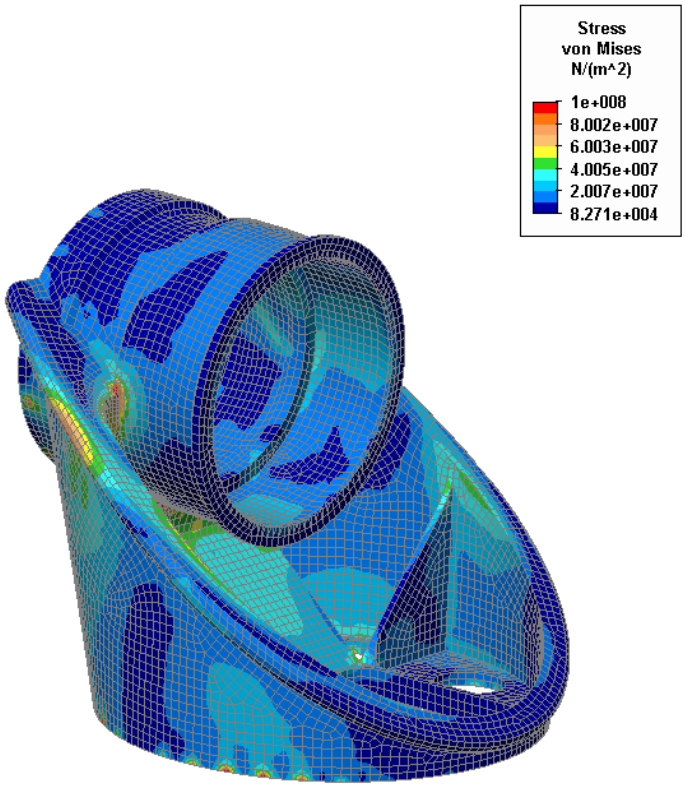

Figure 7-22. FEA of turret.

7.3.6 Alternative Structural Designs

We evaluated alternative structural designs during Phase I. We performed preliminary development and costing of modular and integrated designs. Our studies showed higher capital costs associated with modular designs. The integrated designs (Figure 7-23) were optimized to improve the technical concept and reduce cost. We investigated both integrated and modular gearing. The modular design (1A) was eliminated because of its high weight (and therefore, high cost). Configurations 1B and 1C were eliminated because the gearbox casing is located within the load path. Configuration 1D offered a more optimized load path and became the precursor of the final MS-1 design.

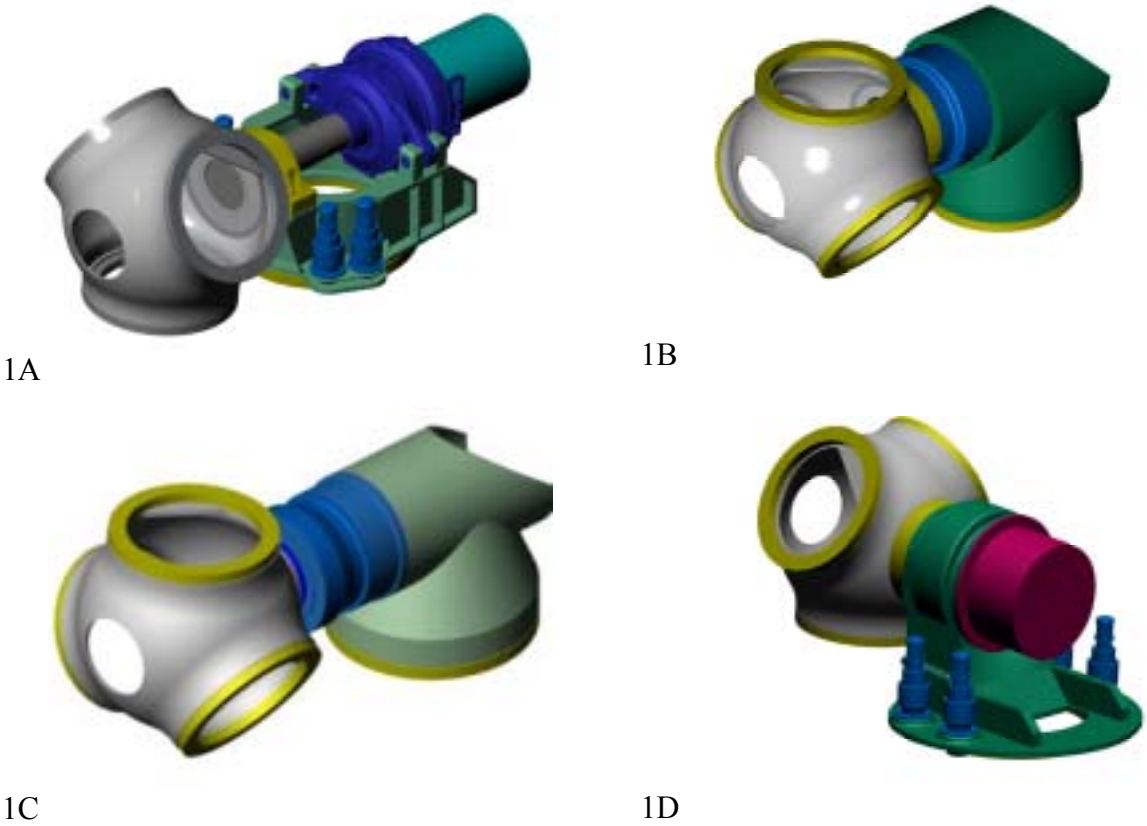

Figure 7-23. Alternative tower-top designs.

7.4 Medium-Speed/Six-Output Design

The medium speed/six-output (MS-6) integrated design is composed of the drive unit, which includes the main bearing, bull gear, pinions, spindle, generators, brake system, and the turret structure, which completes the structural connection to the tower top (Figure 7-24).

The rotor hub and bull gear are connected directly to the outer race of the main bearing. The inner race of the bearing is pressed onto the spindle, which can be structurally decomposed into two functional parts: (1) a central tubular structure that provides the main load path to the turret and (2) the stiffened disk structure to which the generators are mounted. The pinions are integral with the generator shafts and are cantilevered off of the generator bearings. The generator housings are connected directly to the disk structure. The spindle is fastened to the turret, which provides the structural path to the tower top. Located on the back of the generator, the brake system is composed of three brake disks and calipers. The design includes a slip ring, which feeds the blade pitch system, and a rotor lock, which interfaces with the bull gear at the six o'clock position.

Figure 7-25 depicts the MS-6 drive unit.

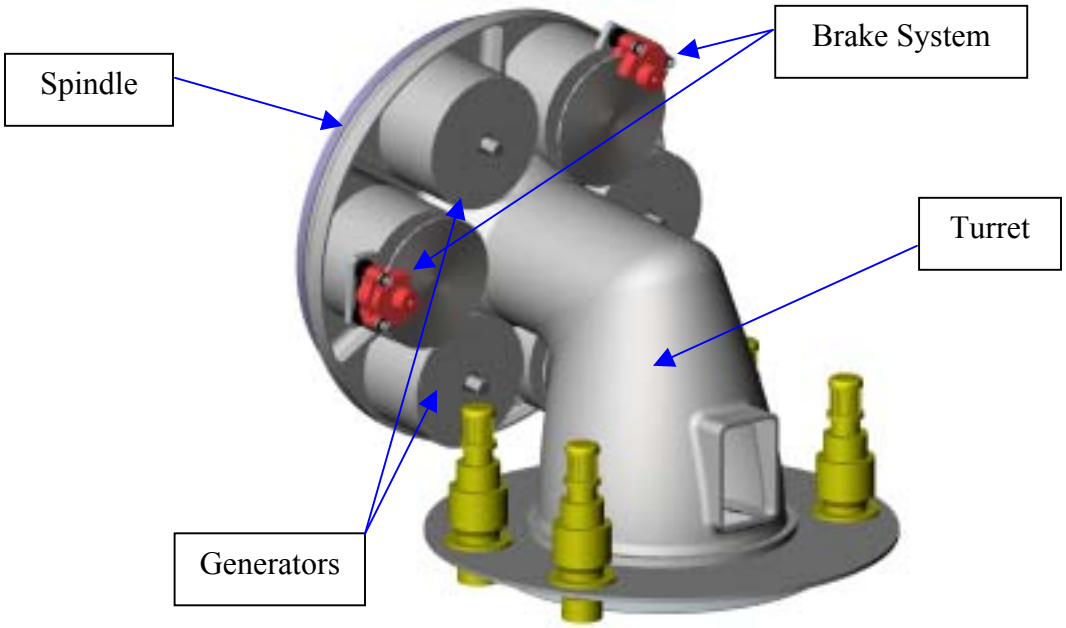

Figure 7-24. MS-6 design.

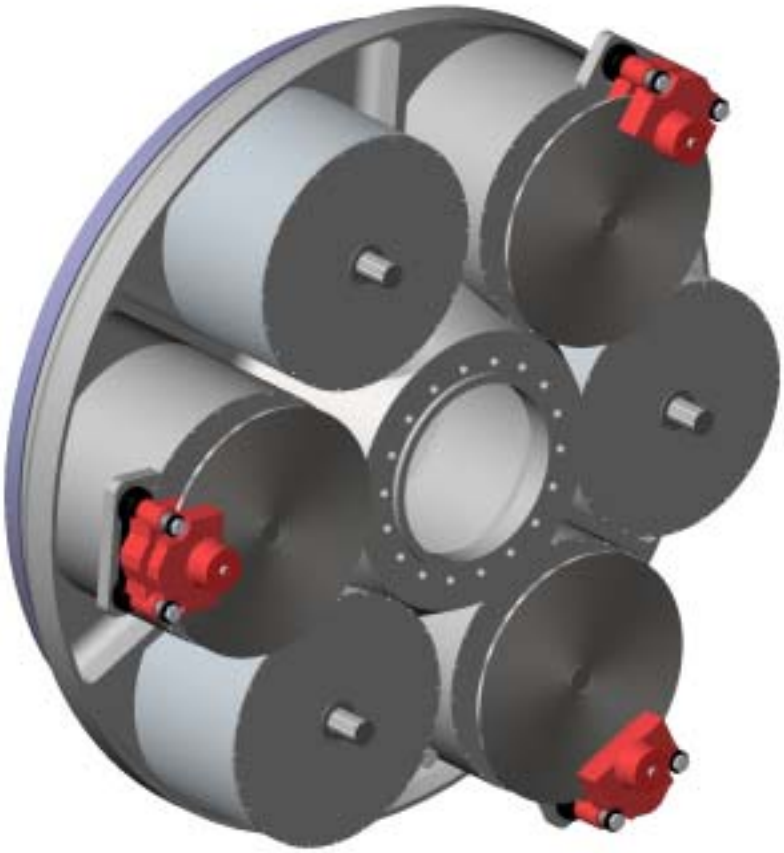

Figure 7-25. MS-6 drive unit.

7.4.1 System Design

Section 4.5 describes the process by which we selected and optimized the MS-6 design. We developed drives of several gear ratios and made preliminary estimates of the complete drive costs (Figure 7-26). Drive cost is at minimum at the 14:1 ratio. The gearing cost falls steadily from 20:1 to 8:1, but the generator cost shows a minimum at the 14:1 ratio and rises greatly at the 8:1 ratio. These results show the strong dependence of PM generator costs on speed. The PE costs, which are the same for all configurations, are included to provide an estimate of the overall cost of the drive unit.

Figures 7-27 and 7-28 show combined gearing and generator masses and gear casing OD, respectively. The mass of the 8:1 drive is significantly less than the 14:1 and 20:1 designs, as is the overall OD of the unit. While advantageous, these factors do not override the lower cost of the compound epicyclic design.

Based on these analyses, the 14:1 design was chosen for further development. Table 7-6 shows the MS-6 specifications.

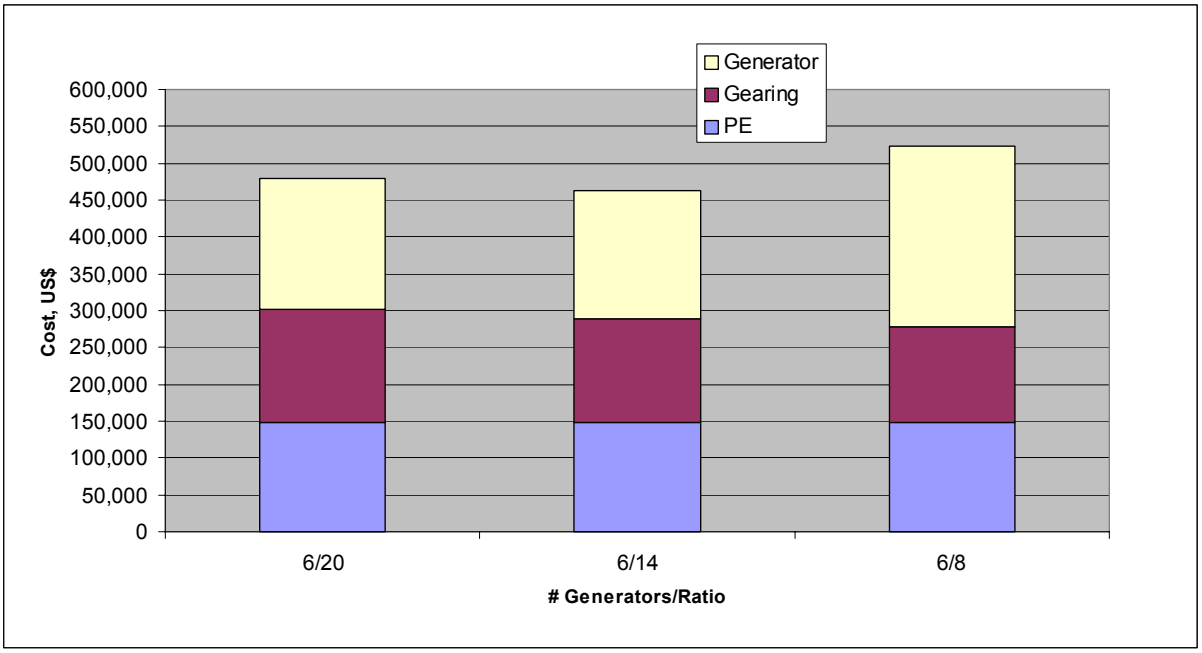

Figure 7-26. MS-6 drive unit costs versus gear ratio.

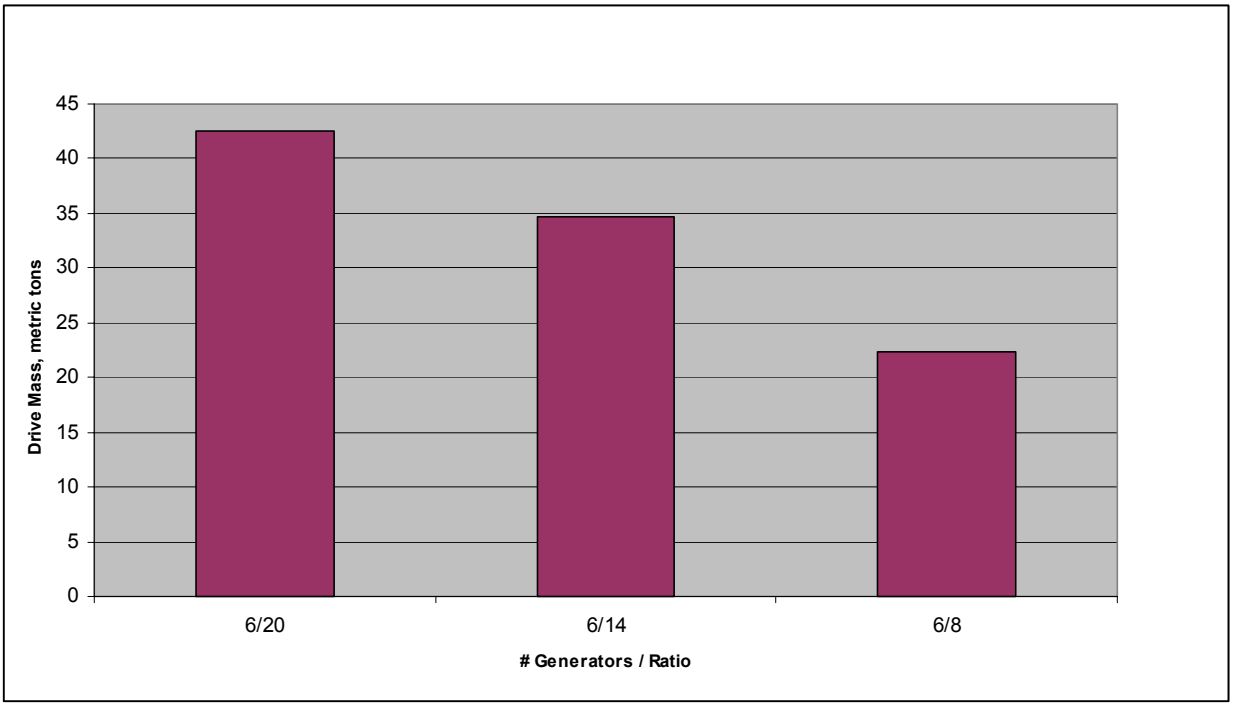

Figure 7-27. Drivetrain weight comparison.

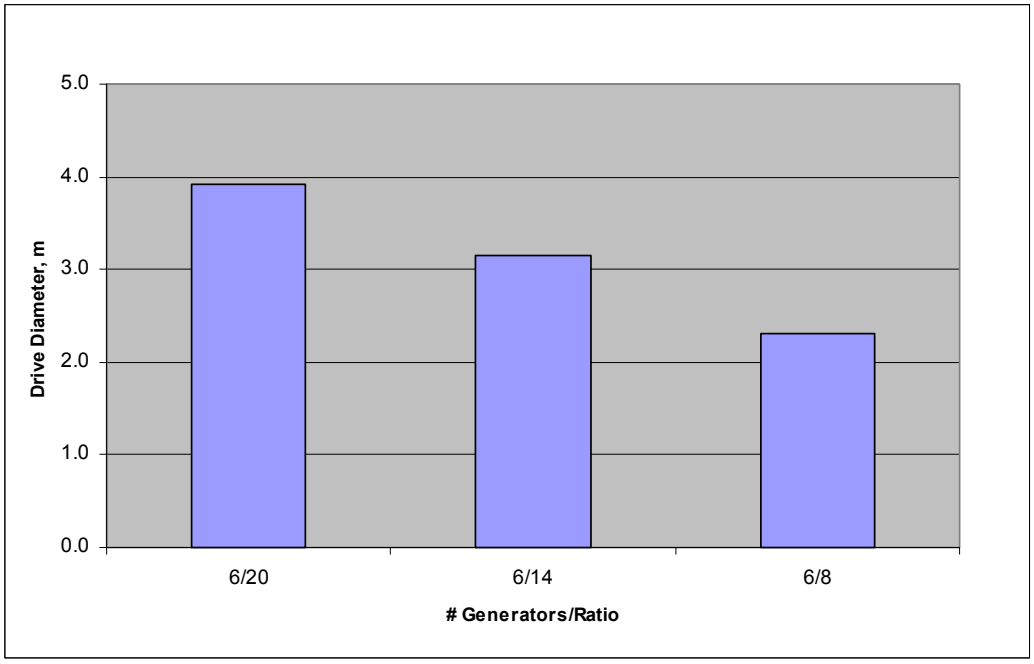

Figure 7-28. Drivetrain envelope comparison.

Table 7-6. MS-6 Drivetrain Specifications

Gearing ratio	14:1
Gearbox type	Helical parallel
Bullgear pitch diameter	2.0 m
Generator outside diameter	0.94 m
Generator speed	275 rpm
Generator cooling	Liquid

Abbreviations: m = meter; rpm = rotations per minute

7.4.2 Gearing

The "gearbox" is composed of the main bearing, bull gear, six pinions, and spindle. The main bearing stiffens the large-diameter bull gear to reduce operating deflections. Because the pinions are cantilevered off of the generator bearings, all six generators must be mounted to complete the gearbox. This design reduces the number of bearings while allowing removal of the assembled generator, thus easing maintenance. Directed oil spray lubricates the mesh and bearings.

Table 7-7. MS-6 Gearing Specifications

Gearing ratio	14:1
Bullgear pitch diameter	2.0 m
Pinion pitch diameter	0.143 m
Face width	0.143 m
Helix angle	15.0°

Abbreviations: m = meter

More detailed evaluation would be required to ensure that the mesh operates within acceptable tolerances. An alternative design would include separate generator and pinion bearings, with the spline connection allowing removal of the generator as a unit. We attempted to reduce the number of bearings to reduce capital and O&M costs, while keeping serviceability in mind. Either design could be implemented at somewhat higher risk and engineering cost and lower capital cost for the chosen configuration. For more detail, see Appendix H.

Table 7-7 shows the MS-6 gearing specifications.

7.4.3 Generator

Mechanical Layout

The generator for the MS-6 design is based on GDEB's liquid-cooled PM technology. The mechanical design of the generator was driven by service requirements: the generator is flange-mounted to allow removing it as a unit. The generator bearings support the overhung load on the pinion. Figure 7-29 shows a section view of the MS-6 generator.

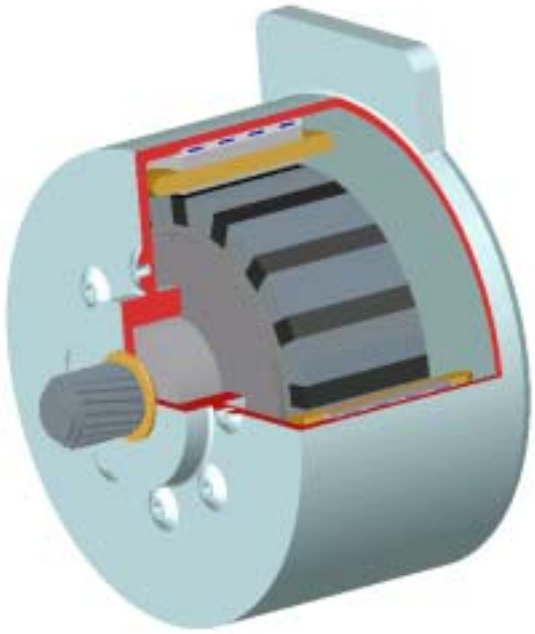

Figure 7-29. MS-6 generator section view.

Electrical Design

The MS-6 electrical design is based on GDEB's liquid-cooled PM generator technology. The generator diameter and bullgear diameter are closely linked—gearing costs rise as the bullgear diameter increases, but in general, generator costs fall as the diameter is increased. We conducted a study to determine the most effective generator diameter. The study showed a local minimum in generator cost at the 0.95-m diameter. The increase in cost above the 0.95-m diameter is a result of the combination of increased pole and coil count with associated fixed costs in coil and pole fabrication. This finding, along with the results shown in Figure 7-26, proves the optimization of the drive unit.

Figure 7-30 displays the dependence of generator cost on stator OD. The data show a minimum near 0.95-m OD—the final design has a 0.94-m OD.

Table 7-8 shows the MS-6 generator specifications.

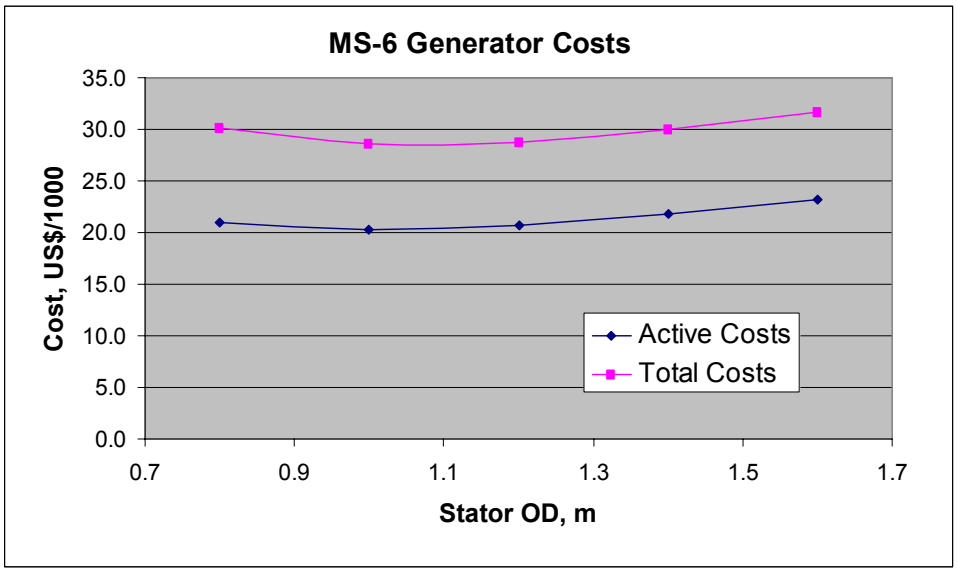

Figure 7-30. MS-6 generator cost versus diameter.

Table 7-8. MS-6 Generator Specifications

Rating	250 kW
Generator OD	1.016 m
Stator OD	0.94 m
Air gap mean diameter	0.772 m
Generator speed	275.8 rpm
Number of poles	16
Voltage	725 V
L/D ratio	0.33
Cooling method	Liquid

Abbreviations: kW = kilowatt hours; m = meter; L/D = length-to-diameter; OD = outside diameter; rpm = rotations per minute; V = volt

7.4.4 Power Converter

Figure 7-31 shows the schematic for the multiple-output PM generator. The utility-side power converter is similar to a direct-drive's power converter. The generator-side power converter is duplicated for each parallel path in the system, which increases the cost of the power electronics required by the multiple-output generator.

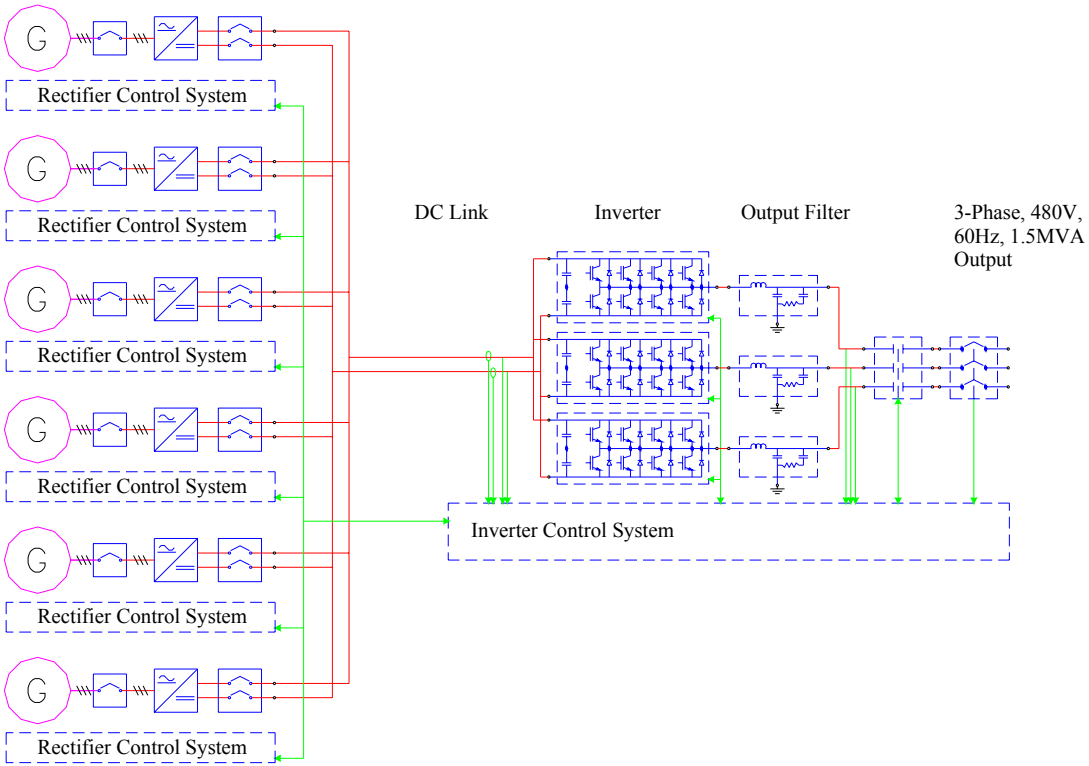

(A)

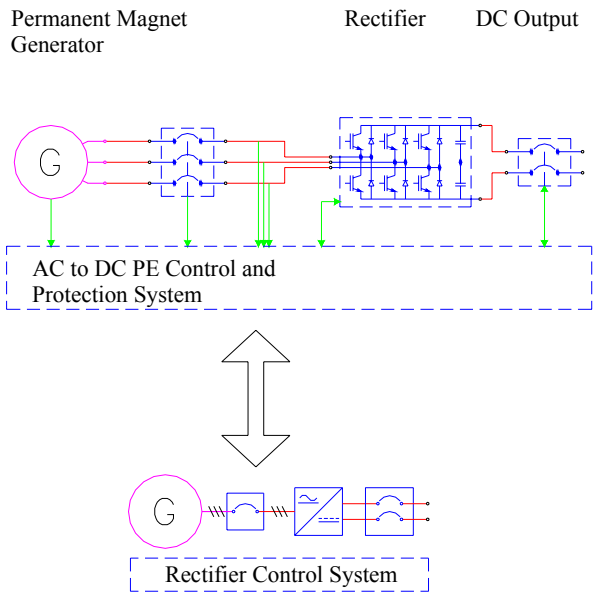

(B)

Figure 7-31. (*A*) Power electronics for MS-6 design. (*B*) Power electronics for individual generator.

7.4.5 Structural Design

After investigating several structural configurations, we chose a design following that of the direct-drive configuration. An FEA of the turret was conducted to prove the integrity of the design. Figure 7-32 displays the stresses under the damage equivalent yaw load.

An FEA of the spindle and generator-mounting disk was also conducted to prove the structural integrity of the load bearing tube and the stiffness of the disk structure under operating loads (Figure 7-33).

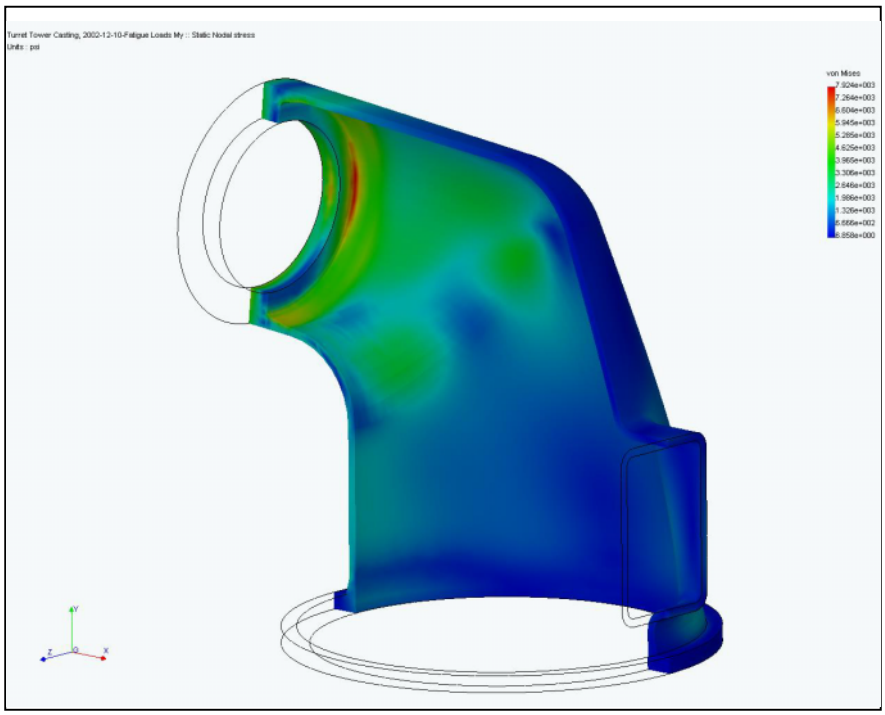

Figure 7-32. FEA of turret.

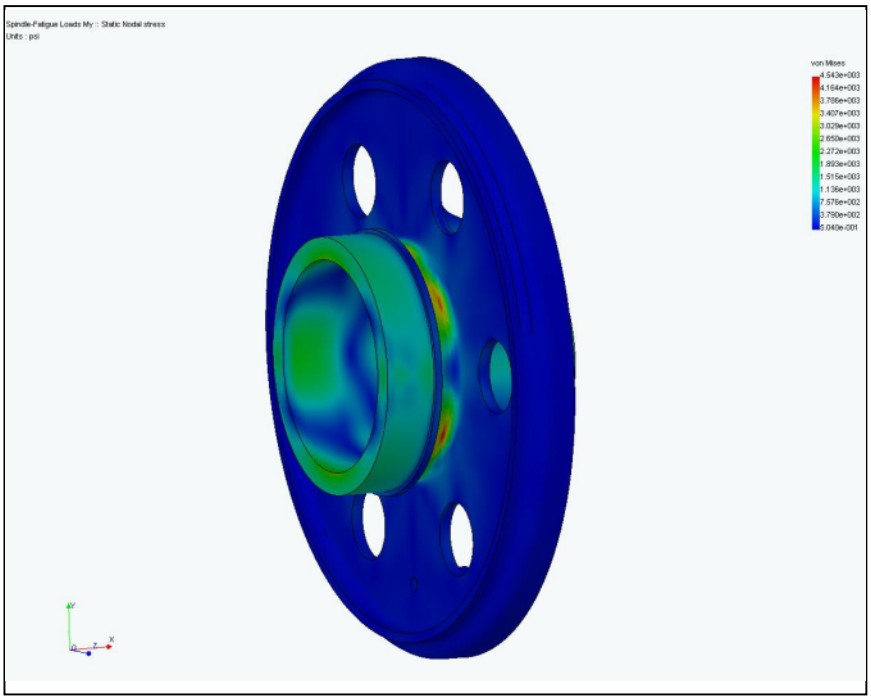

Figure 7-33. FEA of spindle and generator mount.

8 COE Development

This section describes in detail the development of the cost of energy (COE) for each drivetrain configuration in our study. For each candidate drivetrain, the COE was calculated for a wind turbine implementing that drivetrain. The following formula, adapted from *Wind Energy Costs* (National Wind Coordinating Committee 1997), was used to calculate COE:

$$COE = (FCR \times ICC + AOM) / AEP$$

where

FCR	=	fixed charge rate
ICC	=	initial capital cost
AOM	=	annual operation and maintenance
AEP	=	annual energy production.

Note: COE is based on a 20-year turbine life.

Each variable in the equation depends on other input. Figure 8-1 summarizes the inputs for calculating the COE for each turbine. The sections that follow describe the main COE inputs and explain how we obtained values for each.

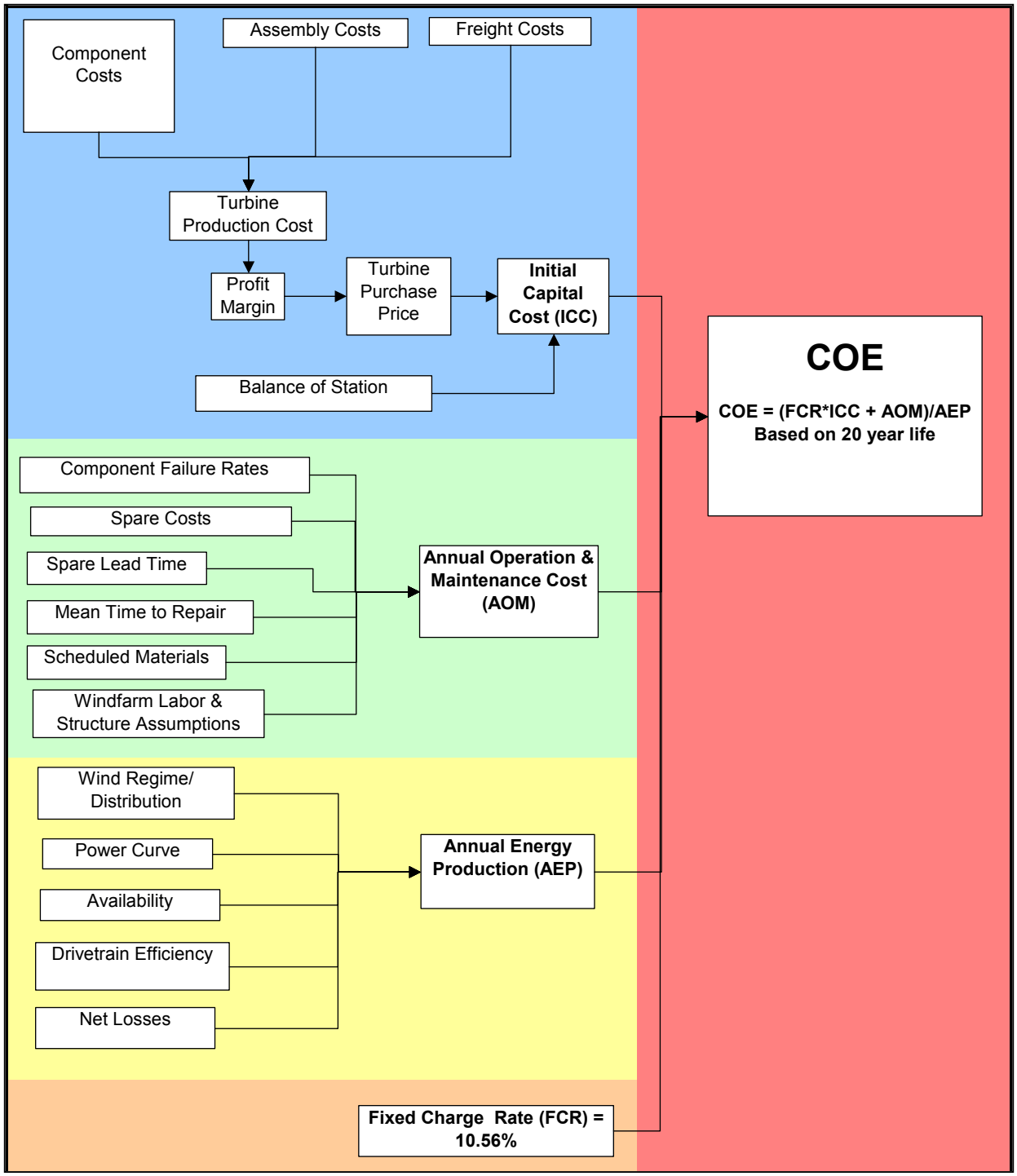

Figure 8-1. Cost of energy inputs.

8.1 Initial Capital Cost

The initial capital cost (ICC) is the turbine purchase price, plus the balance-of-station costs. The ICC includes both costs affected and costs unaffected by the drivetrain configuration. Gearing, generator, power converter, and structural elements costs depend on the drivetrain configuration. Rotor, tower, yaw system, controller, and balance of station costs are independent of the drivetrain configuration.

We obtained the turbine purchase price by adding a 15% profit margin to the turbine production cost. A large part of Phase I of the WindPACT project was determining the production costs of turbines implementing each drivetrain configuration.

The following sections describe the ICC inputs in detail. Note component costing was based on production quantities, as outlined in the statement of work, of 200 MW/year (133 x 1.5-MW turbines / year). All prices are current market prices—not projected estimates.

8.1.1 Component Costs

After completing the preliminary design of each drivetrain configuration, we compiled a bill of materials (BOM) of its major components. Components were either standard, off-the-shelf components (e.g., a brake caliper) or manufactured components designed by Northern (e.g., the direct-drive turret casting) or its subcontractor (e.g., the compound epicyclic single-output gearbox).

Gearbox

Gearbox costs were determined using the methodology described in Appendix H. Designs were developed and weights were determined for each gearbox component. Then specific costs (Tables 8-1 and 8-2) were used to establish the cost of each component in production quantities as outlined in the SOW. Costs were developed using information provided by GCSC, as well as new quotes for the designs we developed during Phase I of the WindPACT project.

Table 8-1. Specific Gearing Costs for Planetary Designs

	13.89/1 helical		16/1 helical	
Component	**US$/lb**	**US$/kg**	**US$/lb**	**US$/kg**
Sun pinion	17.78	8.07	10.21	4.63
HS planet	4.04	1.83	3.22	1.46
LS planet	9.33	4.23	7.46	3.38
Ring gear	5.05	2.29	4.53	2.05
Carrier	1.03	0.47	1.06	0.48
Housing	1.80	0.82	1.61	0.73

Abbreviations: HS = high-speed; kg = kilogram; lb = pound; LS = low-speed; US = United States

Table 8-2. Specific Gearing Costs for Parallel-Shaft Designs

	8/1		14/1		20/1	
Component	**US$/lb**	**US$/kg**	**US$/lb**	**US$/kg**	**US$/lb**	**US$/kg**
Pinion	8.12	3.68	8.53	3.87	8.93	4.05
Gear	4.52	2.05	5.52	2.50	5.77	2.62
Housing	1.80	0.82	1.80	0.82	1.80	0.82

Abbreviations: lb = pound; kg = kilogram

Gearbox bearing costs were based on quotes obtained from bearing manufacturers after the designs were complete. Cost of ancillary equipment—cooling system and coupling devices—were quoted also, and these costs are included in the overall gearbox cost.

Generator

As part of Phase I, Northern developed the Generator Cost Builder (GCB), a generator-costing model. We used the GCB for several design tasks during Phase I. The model allowed the team to quickly estimate manufacturing and assembly costs associated with the active material given in a preliminary generator design. Early in the process, we used the GCB to determine the cost impact of candidate designs and parameter changes using a "what if?" methodology. Using the GCB's output and the predicted efficiency curve for a candidate design, we could use the COE model to determine the COE impact of a generator design.

The GCB estimates the generator cost from parameters entered on the Design Input Sheet (Figure 8-2).

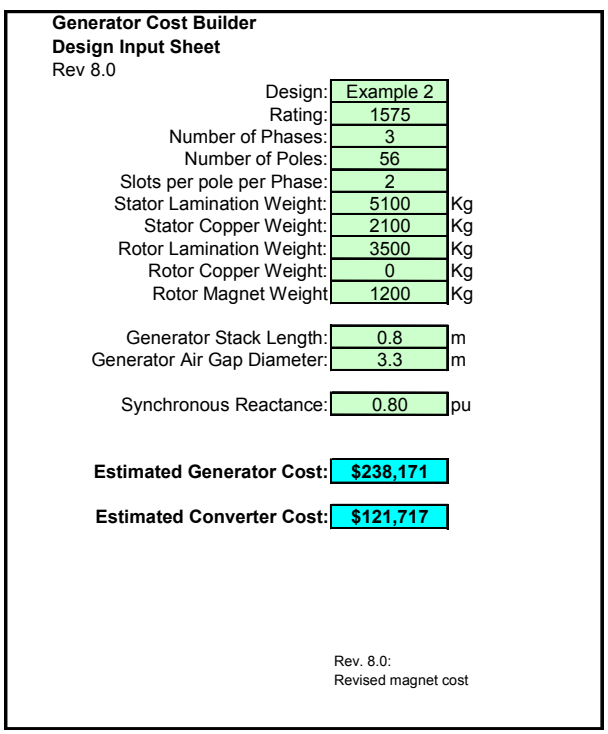

Generator Cost Builder
Design Input Sheet
Rev 8.0

Design:	Example 2	
Rating:	1575	
Number of Phases:	3	
Number of Poles:	56	
Slots per pole per Phase:	2	
Stator Lamination Weight:	5100	Kg
Stator Copper Weight:	2100	Kg
Rotor Lamination Weight:	3500	Kg
Rotor Copper Weight:	0	Kg
Rotor Magnet Weight	1200	Kg
Generator Stack Length:	0.8	m
Generator Air Gap Diameter:	3.3	m
Synchronous Reactance:	0.80	pu
Estimated Generator Cost:	**$238,171**	
Estimated Converter Cost:	**$121,717**	

Rev. 8.0:
Revised magnet cost

Figure 8-2. Design Input Sheet.

The model can be used for both wound rotor and PM generators. Input parameters include the following:

- Output rating
- Pole and slot counts
- Active material weights
  - Stator lamination steel
  - Stator winding copper
  - Rotor lamination steel
  - Rotor winding copper
  - Rotor magnets
- Active generator length
- Air gap diameter.

Materials and labor costing data are entered on the Manufacturing Cost Input Sheet (Figure 8-3).

Generator Cost Builder
Manufacturing Cost Input Sheet

Data entered on highlighted cells only:

Design:	Example 2		
Stator laminations:	$1.30	$/kg	Stamped lams
Rotor laminations:	$1.20	$/kg	Stamped lams
Stator wire:	$3.60	$/kg	
Rotor wire:	$3.75	$/kg	
Magnets:	$40.00	$/kg	
Stator frame:	$21,578	$	
Rotor spider:	$14,706	$	
Bearing:	$37,875	$	
Cooling system:	$0	$	
Cover/endbell:	$903	$	
Balance of generator:	$2,048	$	All other parts needed to complete final generator assembly
Stator	$11	$	Insulation materials for each coil
Fabricate each stator coil:	$54	1.25	Labor to make formed coil
Stack stator:	$2,193	51	stack, press, bolt/weld
Load coils in stator and make connections:	$47	1.1	Labor & miscellaneous materials, per coil
Dip stator:	$500	$	Labor & materials
Rotor	$0	$	Insulation, bobbin per pole
Stack each rotor pole:	$32	0.75	stack, press, weld, post machine
Fabricate each rotor winding:	$0	0	winding labor, per pole
Assemble each wound rotor pole:	$0	0	per pole
VPI rotor pole:	$0	0	per pole
Assemble poles to rotor:	$11	0.25	per pole
Insert magnets and install retainers	$43	1	per pole
Make all rotor electrical connections:	$0	0	per pole
Final generator assembly	$1,475	$	Rotor mounted to stator, final assembly
Generator testing and QA:	$572	$	
Burdened Labor Rate:	$43.00		
Margin:	20%		

Figure 8-3. Manufacturing Cost Input Sheet.

Critical to the accuracy of the model, these inputs include the following:

- Cost per kilogram of active materials
- Parameterized costs of other components (housing, bearings, rotor frame, etc.)
- Labor costs
- Time for manufacturing subtasks
- Time for final assembly and testing.

Labor inputs are entered for subassembly operations, such as winding stator coils, stacking rotor poles, and inserting magnet assemblies.

Using the design and manufacturing cost data from the input sheets, the GCB calculates the generator cost. The Cost Calculation Sheet shows the GCB's output, including cost per pole assembly and coil assembly, costs of the stator and rotor assemblies, and an overall cost and price estimation of the complete generator (Figure 8-4).

Generator Cost Builder
Cost Calculation Sheet

	Design:	**Example 2**	
Stator			**# of coils:** 336
	Laminations	$6,630.00	
	Stack stator	$2,193.00	
	Copper	$7,560.00	**Cost per coil:** $76.25
	Insulation	$3,528.00	
	Coil fabrication	$18,060.00	
	Load and connect coils	$15,892.80	
	Dip stator	$500.00	
	Frame	$21,578.13	
	Stator Cost	**$75,941.93**	
Rotor			**# of poles:** 56
	Laminations	$4,200.00	
	Copper	$0.00	
	Magnets	$48,000.00	
	Insulation	$0.00	
	Pole stack fabrication	$1,806.00	
	Coil Fabrication	$0.00	**Cost per pole:** $964.39
	Assemble and VPI poles	$0.00	
	Install and connect poles	$3,010.00	
	Spider	$14,705.86	
	Rotor Cost	**$71,721.86**	
Final assembly			
	Balance of materials:	$40,825.63	
	Generator assembly/QA:	$2,047.00	
	Generator total cost:	$190,536.41	
	Generator total price:	**$238,170.51**	

Figure 8-4. Cost Calculation Sheet.

We obtained manufacturing data for a large, low-speed wind turbine generator. Using this data, we developed production, labor, and material costs for input to the GCB. The manufacturing data, specific to the particular facility, allowed us to calculate generator cost estimates quickly. To verify the GCB's results, the input data for Northern's NW100 generator, which is built in the same facility, was entered into the model. The GCB's price for the NW100 generator was within 5% of the actual purchase price.

Balance of generator. To accurately develop the capital cost of nonactive materials of PM generators for the PMDD, MS-1, and MS-6 configurations, we began with a preliminary design and solid model of the components that support the active materials. Bearings, shafts, rotors, housings, water jackets, seals, etc., were sized to support the size and mass of active materials and to withstand predicted torque and imbalance forces. In some cases, the mass of each component was multiplied by the specific cost of the component to obtain the predicted cost. The specific cost, or cost per weight, was determined by quotations for similar components. In other cases, a quotation for the component was used to obtain the predicted cost. The cost of miscellaneous components, such as fasteners, was predicted by using a formula. The cost of miscellaneous components was assumed to be a linear function of the power rating of the generator.

Power Electronics

The cost of power electronics was determined by completing preliminary designs and a BOM for each drivetrain configuration. We collected production-quantity quotes for each component as described above for standard components.

Structural Components

We used a specific cost (US$/kg) to calculate the capital costs of many 1.5-MW and 3-MW structural components. Each major structural component, including hubs, bedplates, generator casings, main shafts, and towers, were quoted at a preliminary design level. In some cases, we designed the same part as a casting and a weldment and obtained quotes for both. Often the costs of raw and machined parts were broken out in the quotes. The information derived from this process was important in design optimization. After obtaining production-quantity cost quotes and weight estimates for the preliminary baseline and direct-drive designs, we applied the specific costs to the weight of similar components in other configurations and sizes.

For example, if the baseline hub casting cost $2.78 per kilogram and the direct-drive turret casting weighed 5987 kilograms, the estimated cost of the turret casting was $16,644 ($2.78/kg × 5987 kg). We chose this method to make the cost estimates of components from different configurations as consistent as possible. Table 8-3 shows the specific costs.

Table 8-3. Specific Costs of Structural Components

Component	Process	Weight (kg)	Cost (US$)	Specific cost (US$/kg)
Generator rotor	Weldment	4210	15131	3.59
Generator rotor	Weldment / Al / machined	1458	10882	7.46
Tower	Weldment / machined	94545	125000	1.32
Tower	Weldment / machined	170000	230000	1.35
Bedplate	Weldment / machined	8519	34980	4.11
Turret	Weldment / machined	5758	22550	3.92
Generator rotor	Weldment / machined	4210	20290	4.82
Stator ring	Weldment / machined	3841	20244	5.27
Stator arm	Weldment / machined / painted	275	1340	4.87
Bedplate	Casting	7318	15000	2.05
Turret	Casting	5409	13000	2.40
Turret	Casting	6318	9200	1.46
Spindle	Casting	3773	4600	1.22
Spindle	Casting	3864	8500	2.20
Generator rotor	Casting	5909	12700	2.15
Gear casing (SO)	Casting	4270	15972	3.74
Gear casing (MO)	Casting	4157	16461	3.96
Bullgear	Forging / machined	1842	22371	12.15
Hub	Casting / machined / painted	8636	24000	2.78
Hub	Casting / machined	6182	12000	1.94
Spindle	Casting / machined	3864	10700	2.77
Spindle	Casting / machined	3773	8200	2.17
Spindle	Machining	3773	3600	0.95
Stator ring	Machining	3841	3244	0.84
Generator rotor	Machining	4210	5159	1.23
Turret	Machining	5758	4800	0.83
Main shaft	Forging / Machined	5279	22900	4.34
Blades	Glass	5600	80507	14.38
	Glass	8650	113071	13.07
	Glass	10100	135685	13.43
Blades	Glass	—	—	12.00
Blades	Carbon	—	—	16.00

Table 8-4. Balance of Turbine Costs

Non-drivetrain component	1.5-MW cost (US$)	3-MW cost (US$)
Power cabling	17,220	38,000
Controller	42,925	57,000
Rotor	295,174	471,013
Yaw	27,000	60,732
Tower	230,000	414,513

Abbreviations: MW = megawatt; US = United States

Other Drivetrain Components

Parts of the turbine drivetrain can be bought "off-the-shelf." To price these components, we used production-quantity quotes (100 units per year) from vendors. Whenever possible, we collected quotes from multiple vendors, and we used the lowest-cost components that met the design criteria.

Balance of Turbine

The nondrivetrain portion of the turbine was identical for each configuration of a given rating. To obtain a calculated COE for each configuration, we determined costs for these components. Table 8-4 shows the costs used for the balance of turbine components for the 1.5-MW and 3-MW designs, all of which are based on actual industry quotes.

8.1.2 Assembly and Freight Costs

The turbine production cost includes the cost of labor and materials to assemble the turbine and the cost of shipping components to the assembly site. Assembly costs are based on a task-by-task estimate of labor and materials costs.

Because all component costs are FOB origin (i.e., freight not included), we estimated freight costs for a 1.5-MW turbine assembled in production quantities in Minneapolis, Minnesota, a reasonable location to manufacture wind turbines for installation in the Midwest. The size of the direct-drive generator was limited in order to avoid premiums for oversize freight.

8.1.3 Balance-of-Station Costs

Balance-of-station (BOS) costs, including roads, foundations, transformers, distribution, and installation, are independent of the type of drivetrain configuration. Because BOS cost estimates vary widely in published literature, it seemed important to use actual BOS costs provided by a turbine vendor. Based on a quote for twenty-four 900-kW wind turbines in Minnesota, a normalized cost of $165 per kilowatt was used for all turbines in this study. Although the cost is lower than many BOS cost estimates, it does not include the cost of crane equipment for installation. Crane equipment is included in our O&M costs. (The O&M model assumes the purchase of a large crane for dedicated use at the wind farm over its 20-year life.)

8.2 Annual Operation and Maintenance

The original WindPACT SOW assumed 0.7 cents per kilowatt hour for annual O&M costs for each drivetrain configuration. Because O&M costs are linked closely with the type of drivetrain configuration, O&M cost is an important differentiator when comparing drivetrains. In other words, a comprehensive drivetrain configuration study must look at all differences among configurations, and O&M cost is an important difference.

Our technology assessment (Section 4) confirmed the industry perception—and the SOW premise—that the gearbox was a major contributor to O&M costs and that eliminating or simplifying the gearbox would reduce O&M costs. Our O&M analysis confirmed the validity of this perception.

Another goal of the O&M analysis was to understand the sensitivity of a drivetrain's overall O&M cost to specific characteristics (e.g., failure rate, downtime) of its major components. This understanding guided us when making tradeoffs in drivetrain design.

We decided to build a model to quantify O&M costs for each drivetrain configuration. In order to accurately predict the total operation and maintenance costs, the model needed to include both costs affected by the type of drivetrain configuration and costs independent of the drivetrain configuration.

TIAX was contracted to build an O&M cost modeling tool "from the ground up." Appendix I describes the model in detail and discusses the results and corresponding sensitivity analyses. It also explains how to use the Excel-based modeling tool. Section 9 summarizes the results of the O&M analysis.

8.3 Annual Energy Production

Annual energy production (AEP) is the net energy produced by a turbine at a defined wind site. AEP accounts for all losses resulting from drivetrain inefficiencies and availability, as well as net energy losses resulting from transmission, distribution, and the "array effect" that would occur in a 100-MW wind farm. Section 9 presents predicted AEP for each configuration.

8.3.1 Wind Regime

The WindPACT SOW specified the wind regime (wind site) for the project. Following is the site definition:

- Air density = 1.225 kg/m^3 (sea level)
- 10-m wind speed = 5.8 m/s (annual average)
- Windshear exponent = 0.143
- Rayleigh distribution.

Energy production was based on a bin width of 1 m/s.

8.3.2 Power Curve

The mechanical power curve for the 1.5-MW designs was calculated by the blade manufacturer. Northern calculated the mechanical power curve for the 3-MW designs using the FAST program, with blade planform and aerodynamic inputs based on data provided by Company M.

First, the mechanical and electrical power curves were calculated for the baseline configuration. This work determined the rotor speed and pitch schedule to achieve the desired power curves for the baseline machine. The mechanical power curves were then converted to electrical power curves using the given configuration's efficiency. Because each drivetrain configuration has a different full-power efficiency, the maximum electrical power was set to the given machine rating, which was appropriate because only a slight change in pitch schedule is required to achieve the desired power level.

The actual power curves are shown in Section 5.

8.3.3 Availability

We assumed 98.5% availability for all drivetrain configurations. The O&M model estimated the availability of each configuration based on the queuing analyses integral to the model (Appendix I). In theory, the availability of each configuration could be factored into the COE calculation; however, we felt individual differences in availability were a second-order differentiator between drivetrain configurations and were too small to affect COE noticeably.

8.3.4 Net Losses

Net losses include all transmission and distribution losses from the pad transformer at the base of the turbine to the substation where the wind farm connects to the grid. Net losses also include array losses—the aerodynamic losses resulting from wake effects from neighboring turbines in the wind farm. Although net losses of 7% were used for all drivetrain configurations, we believe this percentage is overly conservative and actual net losses could be as low as 3% in some cases.

8.3.5 Drivetrain Efficiency

Drivetrain efficiency is the percentage of mechanical rotor power converted to electrical power as measured on the line-side of the inverter. Table 8-5 lists the total drivetrain efficiency for each 1.5-MW drivetrain configuration (depicted in Figure 8-5).

Figure 8-6 details the steps taken in the efficiency calculations for each drivetrain configuration, and the paragraphs that follow describe the efficiencies for major drivetrain components.

Table 8-5. The 1.5-MW Total Drivetrain Efficiencies

Percentage of rated power	Baseline	Direct drive	MS-1	MS-6
6%	70.0%	80.8%	73.8%	69.4%
25%	84.8%	91.7%	89.3%	87.9%
50%	88.9%	92.4%	90.8%	89.8%
75%	90.3%	91.4%	90.0%	89.1%
100%	90.2%	90.1%	88.9%	88.2%

Abbreviations: MS-1 = medium-speed/single-output; MS-6 = medium-speed/six-output.

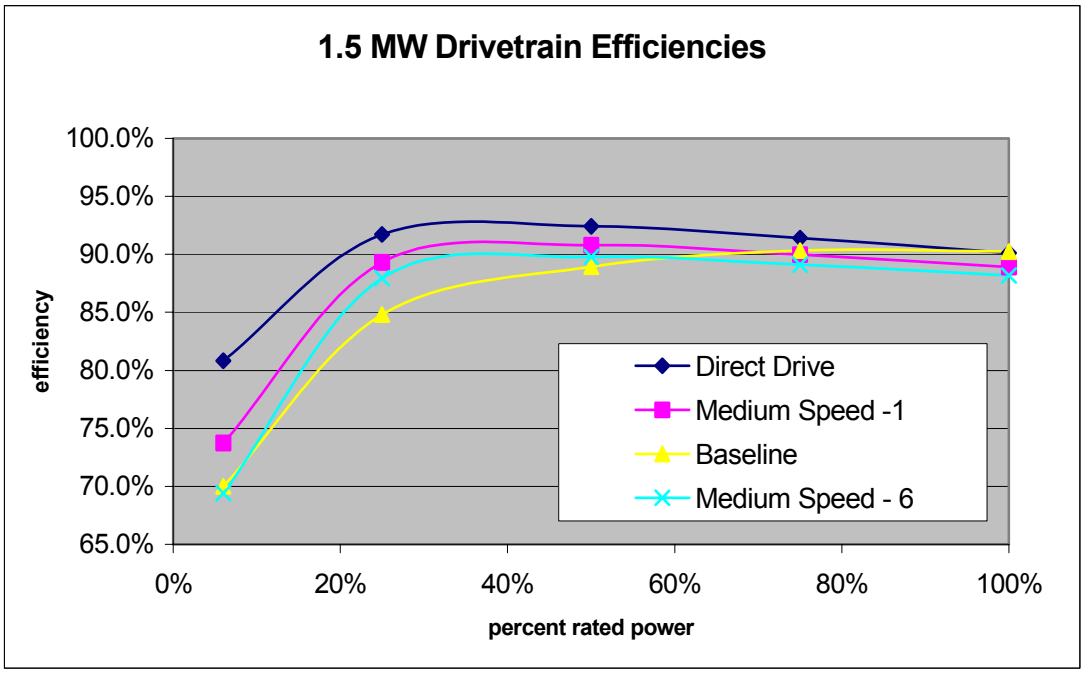

Figure 8-5. The 1.5-MW total drivetrain efficiencies.

Direct Drive																			
Power	Power at grid	Transformer loss	Utility inverter output power	UI current	Filter loss	UI loss	DC link and misc	AR loss	Converter Efficiency	Cable loss	Generator output	Generator current	Generator pf	Generator loss	Generator shaft	Generator Efficiency	Gen&PE Efficiency	Gear Efficiency	**TOTAL**
%	kW	kW	kW	Arms	kW	kW	kW	kW	%	kW	kW	Arms		kW	kW	%	%	%	%
100	1500	9.0	1509	1263	10.4	22.8	2.51	15	96.8%	20.1	1580	1343	0.90	85	1664.3	94.9%	90.1%	100.0%	90.1%
75	1125	7.5	1133	948	6.2	15.9	2.13	10.2	97.0%	11.7	1179	1015	0.91	52	1230.7	95.8%	91.4%	100.0%	91.4%
50	750	6.0	756	633	3.2	9.9	1.76	6.3	97.3%	5.7	783	695	0.95	29	811.6	96.5%	92.4%	100.0%	92.4%
25	375	4.5	380	318	1.4	4.8	1.38	3.9	97.1%	2.5	394	431	0.98	15	408.8	96.3%	91.7%	100.0%	91.7%
6	90	3.4	93	78	0.8	4.2	1.09	3.3	90.8%	0.8	104	162	1.00	8	111.4	93.0%	80.8%	100.0%	80.8%
Single stage																			
Power	Power at grid																Gen&PE Efficiency	Gear Efficiency	**TOTAL**
%	kW																%	%	%
100	1500																90.1%	98.6%	88.9%
75	1125																91.4%	98.4%	90.0%
50	750																92.4%	98.2%	90.8%
25	375																91.7%	97.4%	89.3%
6	90																80.8%	91.3%	73.8%
Baseline																			
Power	Power at grid	Transformer loss	Utility inverter output power	Rotor Power	Power Converter efficiency	Cable loss	Generator output power	Generator efficiency	Shaft Input Power								Gen&PE Efficiency	Gear Efficiency	**TOTAL**
%	kW	kW	kW	kW	%	kW	kW	%	kW								%	%	%
100	1500	9.0	1509	503.0	96.8%	10.0	1536	94.8%	1621								92.5%	97.5%	90.2%
75	1125	7.5	1133	377.5	97.0%	5.8	1150	94.9%	1211								92.9%	97.2%	90.3%
50	750	6.0	756	252.0	97.3%	2.9	766	93.7%	818								91.7%	97.0%	88.9%
25	375	4.5	380	126.5	97.1%	1.3	385	90.5%	425								88.2%	96.1%	84.8%
6	90	3.4	93	31.1	90.8%	0.4	97	85.0%	114								78.9%	88.7%	70.0%
Multidrive (6)																			
Power	Power at grid	Transformer loss	Utility inverter output power	UI current	Filter loss	UI loss	DC link and misc loss	AR loss	Converter efficiency	Cable loss	Generator Output power	Generator Efficiency	Generator shaft power				Gen&PE Efficiency	Gear Efficiency	**TOTAL**
%	kW	kW	kW	Arms	kW	kW	kW	kW	%	kW	kW	%	kW				%	%	%
100	1500	9.0	1509	1263	10.4	22.8	2.51	15.9	96.7%	20.1	1580.7	94.7%	1668.8				89.9%	98.11%	88.2%
75	1125	7.5	1133	948	6.2	15.9	2.13	10.8	97.0%	11.7	1179.2	95.6%	1234.0				91.2%	97.75%	89.1%
50	750	6.0	756	633	3.2	9.9	1.76	6.7	97.2%	5.7	783.3	96.3%	813.7				92.2%	97.39%	89.8%
25	375	4.5	380	318	1.4	4.8	1.38	4.1	97.0%	2.5	393.8	96.1%	409.9				91.5%	96.12%	87.9%
6	90	3.4	93	78	0.8	4.2	1.09	3.5	90.6%	0.8	103.8	92.8%	111.8				80.5%	86.24%	69.4%

Figure 8-6. Drivetrain efficiency calculations.

Generator and Power Electronics Efficiencies

To calculate total generator and power electronics efficiencies, we summed the calculated losses for each of the respective subcomponents (Figure 8-6). The estimates below are for 1.5-MW turbines. The 3-MW efficiencies are assumed to be identical on a percentage basis.

Assuming 100% of rated power is injected into the grid, we back-calculated losses for drivetrain components. The first major power-loss component is the transformer with a 99.4% efficiency quoted by transformer suppliers. (We assumed efficiency is divided equally between core loss, primary winding loss, and secondary winding loss.) The high percentage of fixed loss leads to higher transformer efficiency at higher power levels. In the power converter, the power-loss components are the grid-side filter, utility inverter, DC link capacitor and bleeder circuits, and active rectifier. The main power-loss components are the active rectifier, inverter, and filter. Because power loss is largely a function of load, the power converter's peak efficiency is close to 50% load. The highest power loss in the PM machines is a result of loss of conduction. Mechanical loss of 0.4% and core loss of 0.4% is assumed. Figure 8-7 shows the efficiency of the baseline doubly fed induction machine (Hau 2000). In the baseline turbine, one-third of the power is assumed to flow through the rotor and the remaining power through the generator's stator.

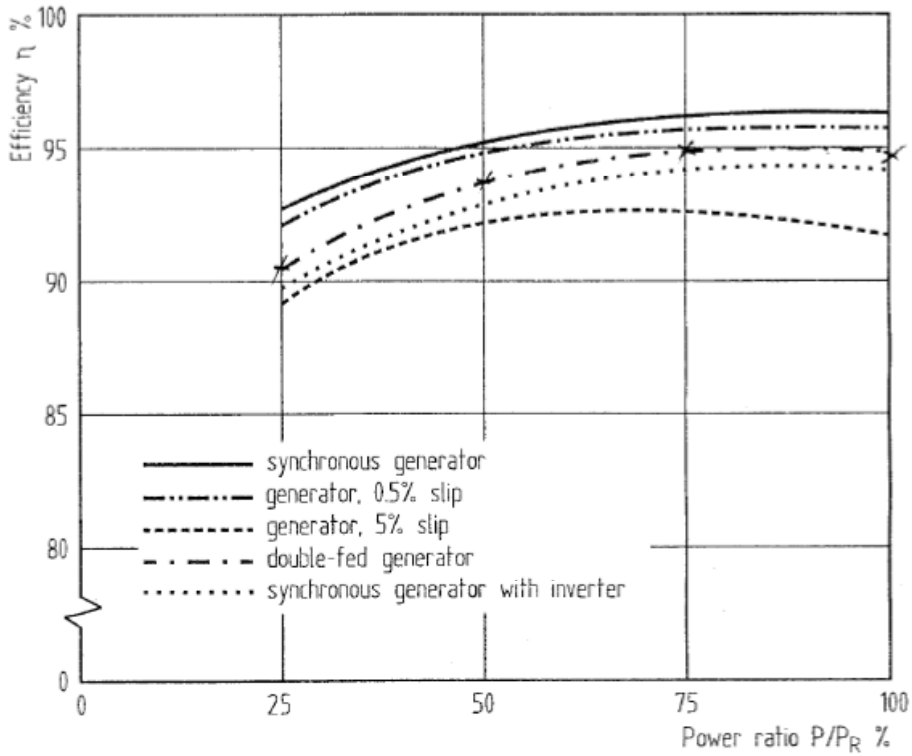

Figure 8-7. Electrical efficiency versus load for types of generators (source: Hau 2000).

Gearbox Efficiencies

To estimate the efficiency of the gearbox designs, GCSC used formulas from Chapter 12 (Shipley 1991) of *Dudley's Gear Handbook*. Chapter 12 provides formulas for power loss in the gear meshes, power loss in the bearings, and power loss due to windage.

Power loss in the gear meshes is a function of the friction coefficient, which is a function of load and speed. The friction coefficient is computed from a set of curves, and unless load and speed vary significantly, power losses in the gear meshes may not change. Conservative values were selected for the friction coefficient.

Power loss in the bearings is a direct function of load and speed on the bearings. For the low-speed bearings, GCSC used the original loads for the 1.5-MW–rated designs and the loads in its gearing study (Appendix H) for the 3-MW–rated designs.

Power loss resulting from windage is a function of the speed cubed. At the low speeds in the gearbox designs, windage losses are insignificant for the low-speed stage and almost insignificant for the high-speed parallel shaft stage in the two baseline gearbox designs.

Based on these formulas, power losses were calculated and summed to obtain the total power loss in the gearbox at rated power. This power loss was then used with the rated power to obtain the gearbox efficiency. This method resulted in much higher than expected efficiencies, which indicates that the method was probably too optimistic. For example, for the 14:1 ratio six-output design, the efficiency was 99.46%. The expected efficiency is approximately 98%. The calculated losses were then adjusted by adding scaling factors for each loss type to obtain the expected efficiency. The same scaling factors were used for all gearbox designs.

To calculate the efficiency at other power levels, the same scaling factors were used with the reduced power level passing through the gearbox. The results align well with other sources (e.g., Hau, 2000).

8.4 Fixed-Charge Rate

Fixed-charge rate (FCR) costs, which include property taxes, insurance, land leases, and interest, are unaffected by the type of drivetrain configuration. As stated in the 9 April 2001 correspondence from A. Laxson to G. Norton, we used a fixed charge rate of 10.56%.

Table 8-6. Gearbox Efficiencies

Percentage of rated power	Baseline	Direct drive	MS-1	MS-6
6%	88.7	100.0	91.3	86.2
25%	96.1	100.0	97.4	96.1
50%	97.0	100.0	98.2	97.4
75%	97.2	100.0	98.4	97.8
100%	97.5	100.0	98.6	98.1

Abbreviations: MS-1 = medium-speed/single-output; MS-6 = medium-speed/six-output

9 Results

9.1 Drivetrain Costs

Tables 9-1 and 9-2 present the component and total costs for the Phase I 1.5-MW and 3-MW drivetrain configurations.

Table 9-1. Capital Costs: 1.5-MW Configurations[a,b]

Component	Baseline	DD 4 m	DD 5.3 m	MS-1	MS-6
Main shaft	$22,900	$0	$0	$0	$0
Main bearing	15,182	36,000	36,000	27,000	36,000
Gearbox	114,075	0	0	80,700	46,881
Gearbox mount	4,000	0	0	0	0
Brake system	10,051	8,723	8,723	14,246	18,441
Brake disk	0	0	0	3,616	2,310
HS coupling	4,195	0	0	0	0
Rotor slip rings	1,397	1,397	1,397	1,397	1,397
Generator	65,000	197,915	185,064	63,385	165,042
Heat exchanger[c]	0	3,688	3,688	3,688	3,688
Bedplate	41,976	23,215	23,215	24,788	23,026
Nacelle enclosure	20,637	17,359	17,359	17,359	17,359
Nacelle total	299,413	288,297	275,446	236,179	314,145
Converter	62,500	120,835	120,835	120,835	146,629
Total drivetrain	**$361,913**	**$409,132**	**$396,281**	**$357,014**	**$460,774**
Power cabling	$17,220	$17,220	$17,220	$17,220	$17,220
Controller	42,925	42,925	42,925	42,925	42,925
Rotor	295,174	295,174	295,174	295,174	295,174
Yaw	27,000	27,000	27,000	27,000	27,000
Tower	230,000	230,000	230,000	230,000	230,000
Component cost	**$974,232**	**$1,021,451**	**$1,008,600**	**$969,333**	**$1,073,093**
Assembly, labor, materials	52,660	48,780	48,780	52,660	55,280
Freight	29,176	35,973	35,973	25,726	26,226
Production cost	**1,056,068**	**1,106,204**	**1,093,353**	**1,047,719**	**1,154,599**
Projected sale price	**1,214,478**	**1,272,135**	**1,257,357**	**1,204,877**	**1,327,789**
Normalized sale price ($/kW)	$810	$848	$838	$803	$885

[a]A "0" indicates that a component is not included in the particular configuration (e.g., the gearbox for the DD configuration) or that a component is included in the price of another subsystem (e.g., the brake disk is included in the high speed coupling in the baseline configuration).
[b]Costs in 2002 US$. All prices reflect current costs (not future projections based on current cost trends).
[c]Heat exchanger includes all components for a closed-loop water-glycol system.
Abbreviations: DD = direct drive; m = meter; MS-1 = medium-speed/single-output; MS-6 = medium-speed/six-output

Table 9-2. Capital Costs: 3-MW Configurations[a]

Component	Baseline	DD 5.3 m	MS-1
Main shaft	$42,597	$0	$0
Main bearing	20,875	45,000	45,000
Gearbox	210,459	0	164,362
Gearbox mount	8,000	0	0
Brake system	14,246	13,739	22,637
Brake disk	0	0	3,616
HS coupling	6,463	0	0
Rotor Slip rings	1,397	1,397	1,397
Generator	102,000	419,932	145,901
Heat exchanger	0	5,000	5,000
Bedplate	81,845	31,169	49,996
Nacelle enclosure	40,000	35,000	30,000
Nacelle total	527,882	551,237	467,909
Converter	115,302	179,905	179,905
Total drivetrain	**$643,184**	**$731,142**	**$647,814**
Power cabling	$38,000	$38,000	$38,000
Controller	57,000	57,000	57,000
Rotor	471,013	471,013	471,013
Yaw	60,732	60,732	60,732
Tower	414,513	414,513	414,513
Component cost	**$1,756,604**	**$1,844,562**	**$1,761,234**
Assembly, labor, materials	87,830	92,228	88,062
Freight	87,830	92,228	88,062
Production cost	**1,932,264**	**2,029,018**	**1,937,357**
Projected sale price	**2,222,104**	**2,333,371**	**2,227,961**
Normalized sale price ($/kW)	$741	$778	$743

[a]A "0" indicates that a component is not included in the particular configuration (e.g., the gearbox for the DD configuration) or that a component is included in the price of another subsystem (e.g., the brake disk is included in the high-speed coupling in the baseline configuration).
[b]Costs in 2002 US$. All prices reflect current costs (not future projections based on current cost trends).
[c]Heat exchanger includes all components for a closed-loop water-glycol system.
Abbreviations: DD = direct drive; m = meter; MS-1 = medium-speed/single-output

Figures 9-1 and 9-2 show the cost of major turbine components for each 1.5-MW and 3-MW configuration.

Tables 9-3 and 9-4 illustrate the relative difference between the baseline configuration and alternative configurations.

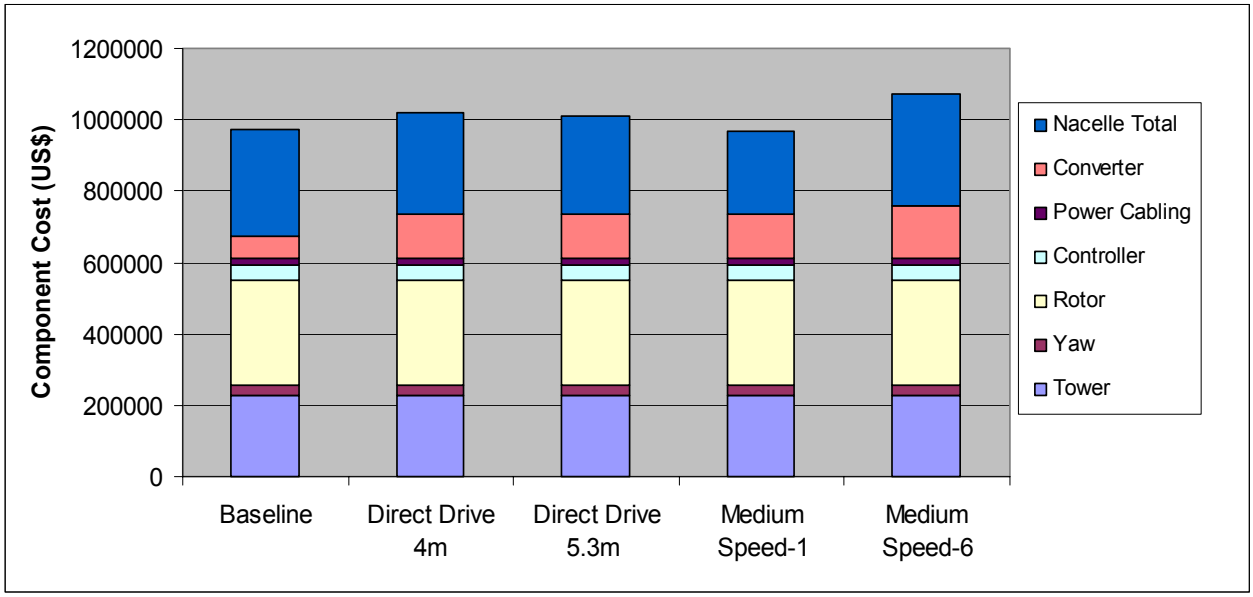

Figure 9-1. Component cost centers: 1.5-MW configurations.

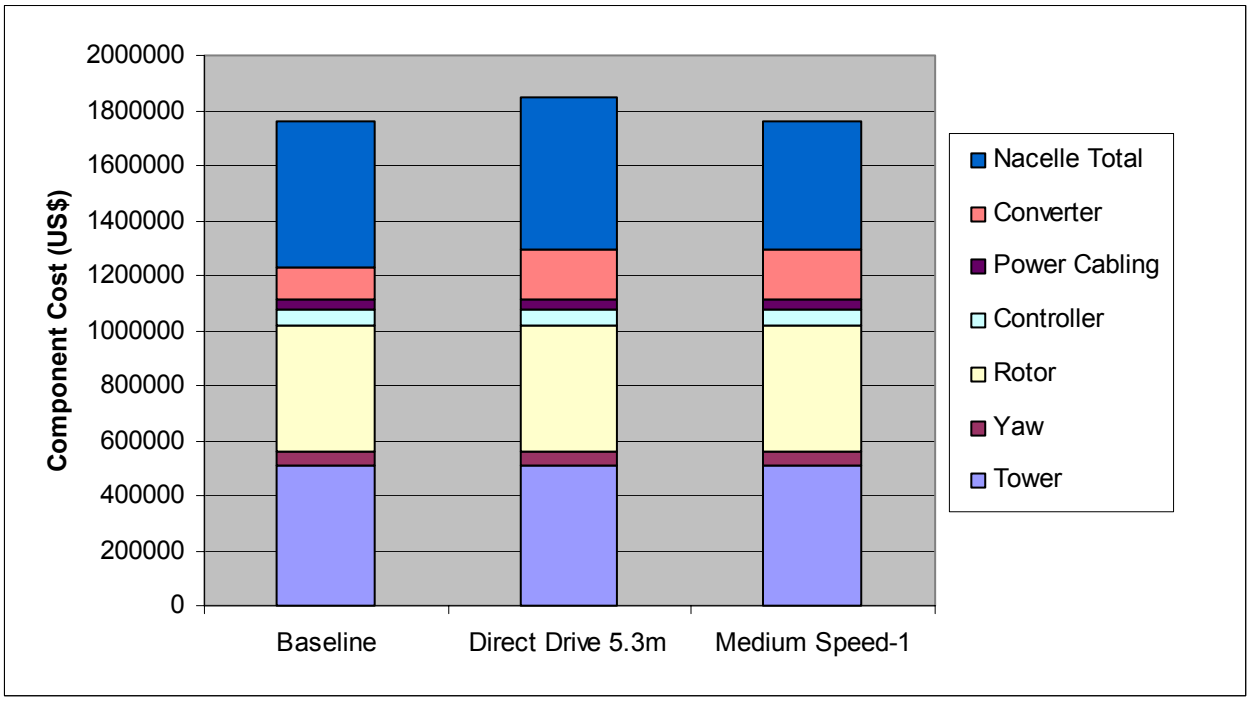

Figure 9-2. Component cost centers: 3-MW configurations.

Table 9-3. Relative Cost Comparison: 1.5-MW Configurations

	Baseline	DD 4 m	DD 5.3 m	MS-1	MS-6
Percentage baseline drivetrain cost	100%	113%	109%	99%	127%
Percentage baseline turbine cost	100%	105%	104%	99%	109%

Abbreviations: DD = direct drive; m = meter; MS-1 = medium-speed/single-output; MS-6 = medium-speed/six-output

Table 9-4. Relative Cost Comparison: 3-MW Configurations

	Baseline	DD 5.3 m	MS-1
Percentage baseline drivetrain cost	100%	114%	101%
Percentage baseline turbine cost	100%	105%	100%

Abbreviations: DD = direct drive; m = meter; MS-1 = medium-speed/single-output

9.2. Operation and Maintenance Costs

Table 9-5 shows the results of the O&M cost analysis. O&M costs are presented in cents per kilowatt-hour produced. Figures 9-3 and 9-4 illustrate the contribution of certain cost centers to total O&M costs. Of note is the very high cost that results from unscheduled drivetrain materials for the MS-6 design. This cost can be attributed to the higher part count and, therefore, greater number of failures (especially relatively expensive generator failures).

Also noteworthy is the O&M savings predicted for the direct-drive designs resulting from less costly scheduled materials (i.e., no gearbox oil), as well as fewer failures (i.e., lower unscheduled materials cost). As expected, an economy of scale was present: all 3-MW configurations were predicted to be less costly to operate and maintain on a per kilowatt-hour basis than their 1.5-MW counterparts. See Appendix I for a full discussion of the O&M analysis methodology, input parameters, and results. Note that O&M models are subjective to some degree and, as a result, they can have relatively higher uncertainties than the other cost models presented in this report. A sensitivity analysis of the O&M model is included in Appendix I.

Table 9-5. Summary of Operation and Maintenance Costs[a]

Rating	1.5 MW				3 MW		
Design	**Baseline**	**DD**	**MS-1**	**MS-6**	**Baseline**	**DD**	**MS-1**
Cost center							
Scheduled burdened labor	0.037	0.037	0.037	0.037	0.034	0.034	0.034
Unscheduled burdened labor	0.039	0.039	0.039	0.039	0.036	0.036	0.036
Scheduled materials	0.041	0.011	0.041	0.041	0.022	0.006	0.022
Unscheduled materials—drivetrain	0.133	0.050	0.098	0.193	0.109	0.058	0.091
Unscheduled materials—other	0.029	0.029	0.029	0.029	0.026	0.026	0.026
Unscheduled spares—drivetrain	0.057	0.057	0.057	0.088	0.050	0.049	0.050
Unscheduled spares— other	0.069	0.069	0.069	0.069	0.056	0.056	0.056
Equipment	0.105	0.105	0.105	0.105	0.070	0.070	0.070
Equipment maintenance	0.030	0.030	0.030	0.030	0.027	0.027	0.027
G&A	0.057	0.057	0.057	0.057	0.053	0.053	0.053
Totals	**0.60**	**0.48**	**0.56**	**0.69**	**0.48**	**0.42**	**0.47**
Per unit cost wrt 1.5-MW baseline	**100%**	**81%**	**94%**	**115%**	**81%**	**70%**	**78%**
Per unit cost wrt 3-MW baseline	**123%**	**100%**	**116%**	**142%**	**100%**	**86%**	**96%**

[a]Costs in cents/kWh
Abbreviations: DD = direct drive; G&A = general and administrative; kWh = kilowatt hour; MS-1 = medium-speed/single-output; MS-6 = medium-speed/six-output; MW = megawatt; wrt = with respect to

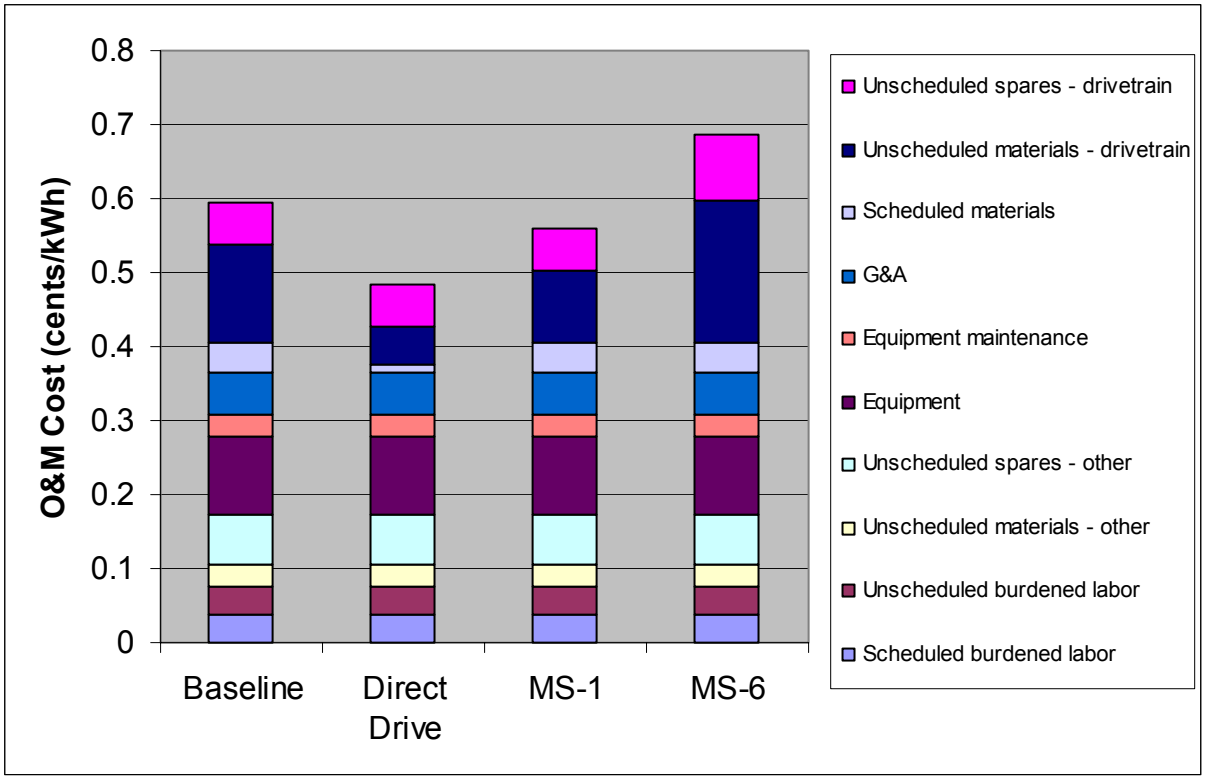

Figure 9-3. O&M cost centers: 1.5-MW configurations.

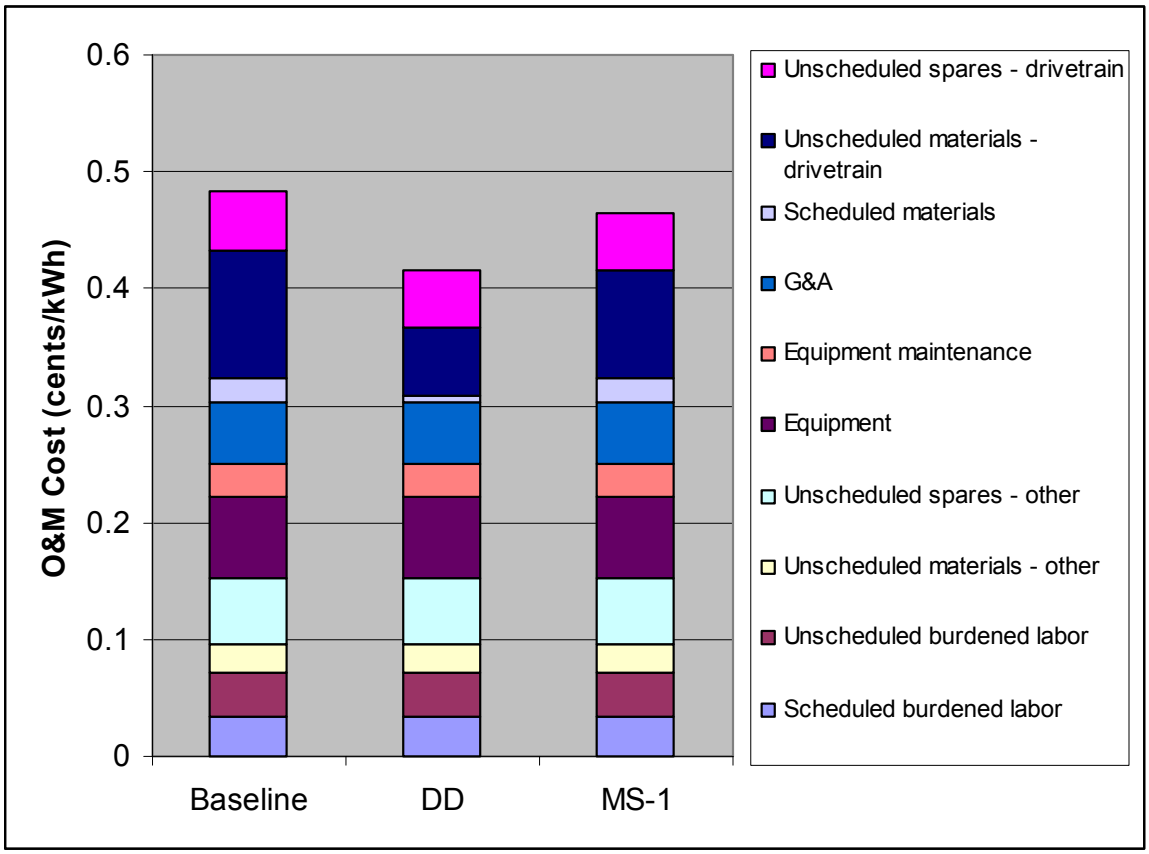

Figure 9-4. O&M cost centers: 3-MW configurations.

9.3. Annual Energy Production

Tables 9-6 and 9-7 show predictions of annual energy production (AEP) for each 1.5-MW and 3-MW configuration. Differences in AEP reflect corresponding differences in predicted drivetrain efficiencies (Section 8). The gain in energy production realized with a permanent magnet generator and no gearbox (i.e., PMDD) is more than 2%.

9.4. Cost of Energy

Tables 9-8 and 9-9 show COE for each 1.5-MW and 3-MW drivetrain configuration. Included are values for the major inputs used to calculate COE. As a whole, the predicted COE was lower for the 3-MW designs than for the 1.5-MW designs.

Table 9-6. Annual Energy Production: 1.5-MW Configurations

	Baseline	DD 4 m	DD 5.3 m	MS-1	MS-6
AEP (MWh)	4769	4873	4873	4812	4776
% 1.5 MW baseline production	100.00%	102.17%	102.17%	100.91%	100.15%

Abbreviations: DD = direct drive; m = meter; MS-1 = medium-speed/single-output; MS-6 = medium-speed/six-output; MW = megawatt; MWh = megawatt hour

Table 9-7. Annual Energy Production: 3-MW Configurations

	Baseline	DD 5.3 m	MS-1
AEP (MWh)	9765	9951	9841
% 3 MW baseline production	100.00%	101.90%	100.78%

Abbreviations: DD = direct drive; m =, meter; MS-1 = medium-speed/single-output; MW = megawatt; MWh = megawatt hour

Table 9-8. COE Summary: 1.5-MW Configurations[a]

	1.5-MW baseline	1.5-MW DD 4.0 m	1.5-MW DD 5.3 m	1.5-MW MS-1	1.5-MW MS-6
Production cost	$1,056,068	$1,106,204	$1,093,353	$1,047,719	$1,154,599
Profit margin	15%	15%	15%	15%	15%
Purchase price	$1,214,478	$1,272,135	$1,257,357	$1,204,877	$1,327,789
Balance of station	$247,500	$247,500	$247,500	$247,500	$247,500
ICC	$1,461,978	$1,519,635	$1,504,857	$1,452,377	$ 1,575,289
FCR	10.56%	10.56%	10.56%	10.56%	10.56%
AOM	25,226	$20,315	$20,315	$23,805	$32,787
AEP (kWh)	4,769,243	4,872,746	4,872,746	4,812,485	4,776,373
COE (cents/kWh)	**3.77**	**3.71**	**3.68**	**3.68**	**4.17**

[a]Costs in US$ unless stated otherwise
Abbreviations: AEP = annual energy production; AOM = annual operation and maintenance; DD = direct drive; COE = cost of energy; FCR = fixed-charge rate; ICC = initial capital cost; kWh = kilowatt hour; m = meter; MS-1 = medium-speed/single-output; MS-6 = medium-speed/six-output; MW = megawatt; MWh = megawatt hour

Table 9-9. COE Summary: 3-MW Configurations[a]

	3-MW baseline	3-MW DD 5.3 m	3-MW MS-1
Production cost	$1,932,264	$2,029,018	$1,937,357
Profit margin	15%	15%	15%
Purchase price	$2,222,104	$2,333,371	$2,227,961
Balance of station	$495,000	$495,000	$495,000
ICC	$2,717,104	$2,828,371	$2,722,961
FCR	10.56%	10.56%	10.56%
AOM	$46,872	$41,485	$46,255
AEP (kWh)	9,764,952	9,950,531	9,841,388
COE (cents/kWh)	**3.42**	**3.42**	**3.39**

[a]Costs in US$ unless stated otherwise.
Abbreviations: AEP = annual energy production; AOM = annual operation and maintenance; DD = direct drive; COE = cost of energy; FCR = fixed-charge rate; ICC = initial capital cost; kWh = kilowatt hour; m = meter; MS-1 = medium-speed/single-output; MS-6 = medium-speed/six-output; MW = megawatt; MWh = megawatt hour

Tables 9-10 and 9-11 show the relative difference in COE for a turbine with each configuration compared with a baseline turbine of the same rated power. The 1.5-MW direct-drive and MS-1 configurations show a lower predicted COE than the baseline design. The 5.3-meter direct-drive configuration offers the greatest predicted savings in COE at 2.3% below the baseline design.

Conversely, the COE predicted for a turbine with the MS-6 configuration is more than14% more expensive than that for the baseline configuration. This is the result of a number of factors. The generator diameter is limited by the allowable spacing around the bull gear. This increases costs in two ways: through a less optimal L/D ratio of the generator relative to the MS-1 design and also by reducing the shear stress at which the generator can run as a result of a less efficient heat conduction path. Both of these factors increase the cost of the generators. In addition, Northern found that the cost of buying several smaller generators is much greater than the cost of buying one large one, as shown in Figure 9-5. These data are based on manufacturers quotes for generators in mass production. In addition, we found that our cost for the 250-kW generator was approximately equal to the cost of a wound rotor generator of the same size. The power electronics cost is higher because of the parallel topology. The efficiency is also lower than the MS-1 design, and the consequent reduction in AEP is not offset by running the turbine at partial power as a result of a generator failure.

The relative COE predictions for the 3-MW configurations show a smaller difference in COE between configurations, with the MS-1 showing the greatest savings in predicted COE.

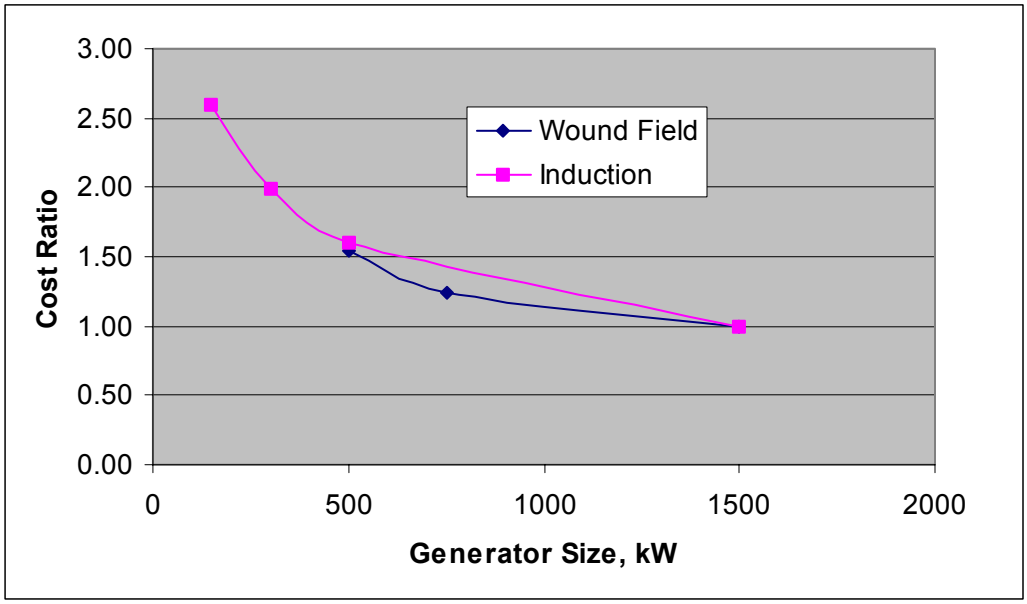

Figure 9-5. Multiple generator costs.

Table 9-10. Relative COE: 1.5-MW Configurations

	Baseline	DD 4.0 m	DD 5.3 m	MS-1	MS-6
% of baseline	100.0%	98.5%	97.7%	97.8%	110.7%
Total (cents/kWh)	**3.77**	**3.71**	**3.68**	**3.68**	**4.17**

Abbreviations: DD = direct drive; kWh = kilowatt hour; MS-1 = medium-speed/single-output; MS-6 = medium-speed/six-output; MW = megawatt

Table 9-11. Relative COE: 3-MW Configurations

	Baseline	DD 5.3 m	MS-1
% of baseline	100.0%	100.0%	99.2%
Total (cents/kWh)	**3.42**	**3.42**	**3.39**

Abbreviations: DD = direct drive; kWh = kilowatt hour; MS-1 = medium-speed/single-output; MW = megawatt

Figures 9-6 and 9-7 show the cost center contributions to the overall COE for each turbine configuration.

Table 9-12 shows the sensitivity of COE to variations in production cost and AEP. Varying the turbine production cost by 10% results in a 7.42% change in COE; a 1% change in AEP causes a 1% change in COE.

9.5. Trends

Figure 9-8 illustrates the relative difference in drivetrain weight between each of the configurations. Figure 9-9 shows the specific capital cost ($ per rated kilowatt) for each configuration. The economies of scale for the 3-MW drivetrains are easily observed from this graph. Similarly, Figure 9-10 shows the downward trend in COE when comparing the 1.5-MW configurations to the corresponding 3-MW versions.

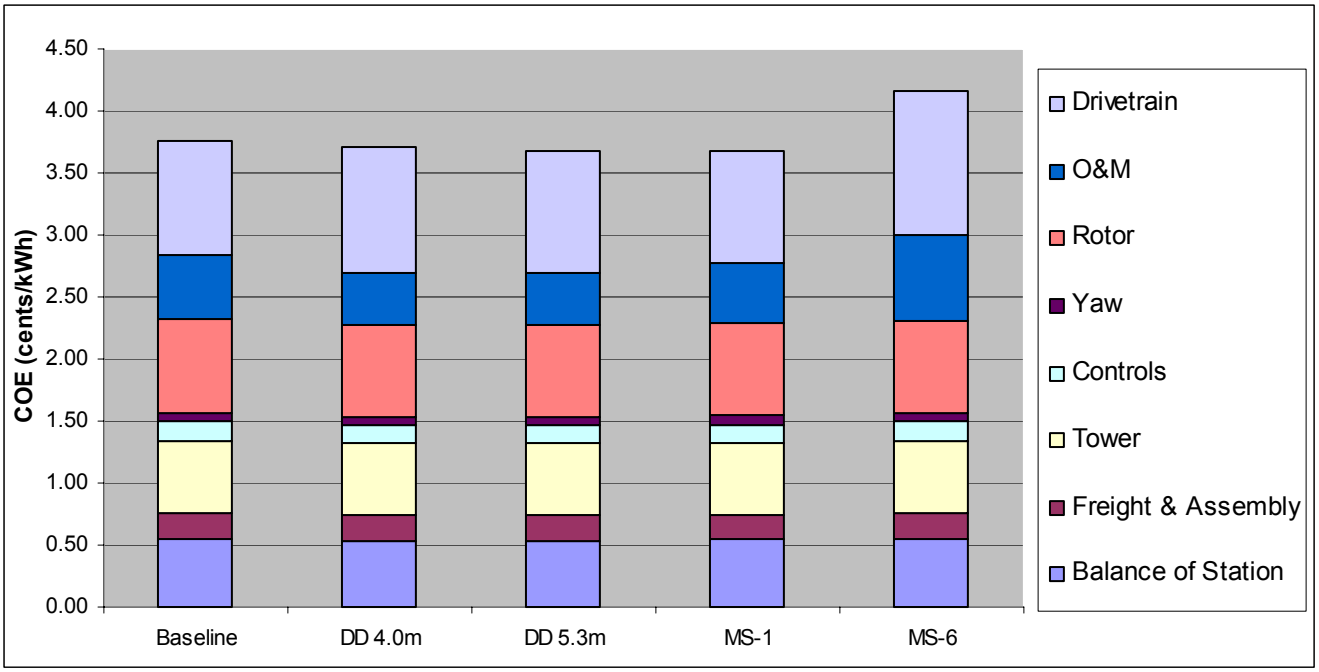

Figure 9-6. COE cost centers: 1.5-MW configurations.

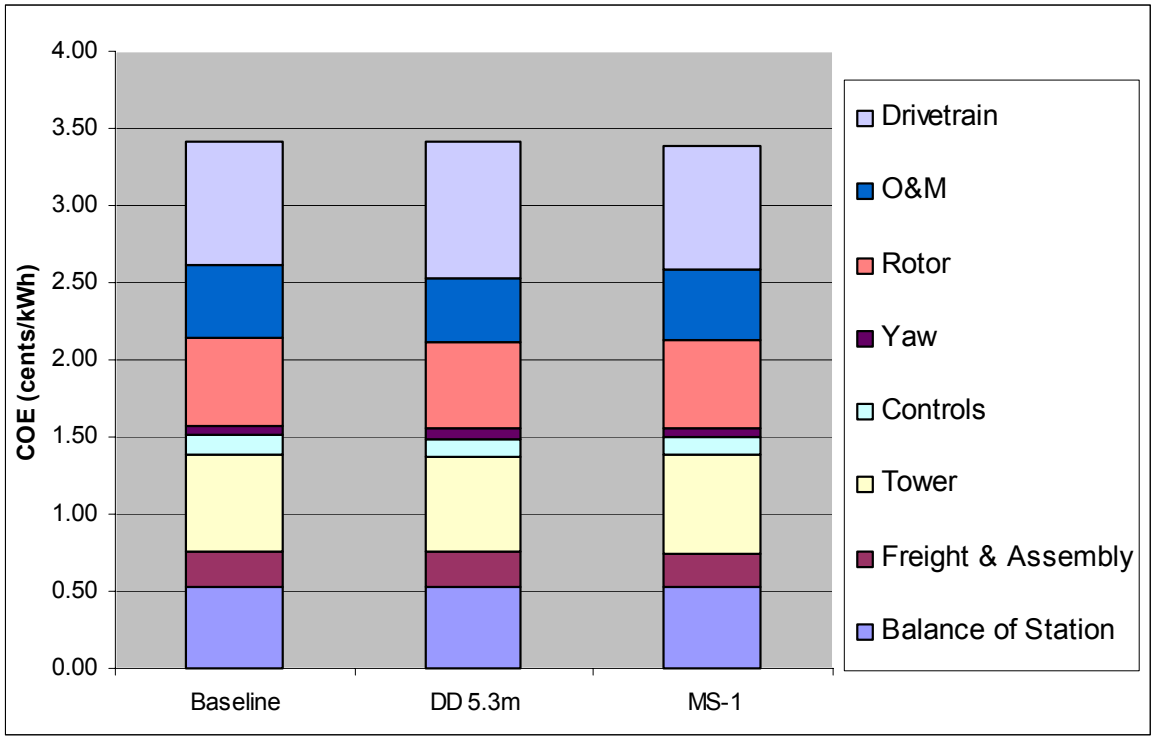

Figure 9-7. COE cost centers: 3-MW configurations.

Table 9-12. COE Sensitivity

Varying parameter	Delta	Delta %	COE delta (cents/kWh)	COE delta %
Production cost (US$)	$110,029	10.0%	0.27	7.42%
AEP (kWh)	48,727	1.0%	–0.04	–1.0%

Abbreviations: AEP = annual energy production; COE = cost of energy; kWh = kilowatt hour

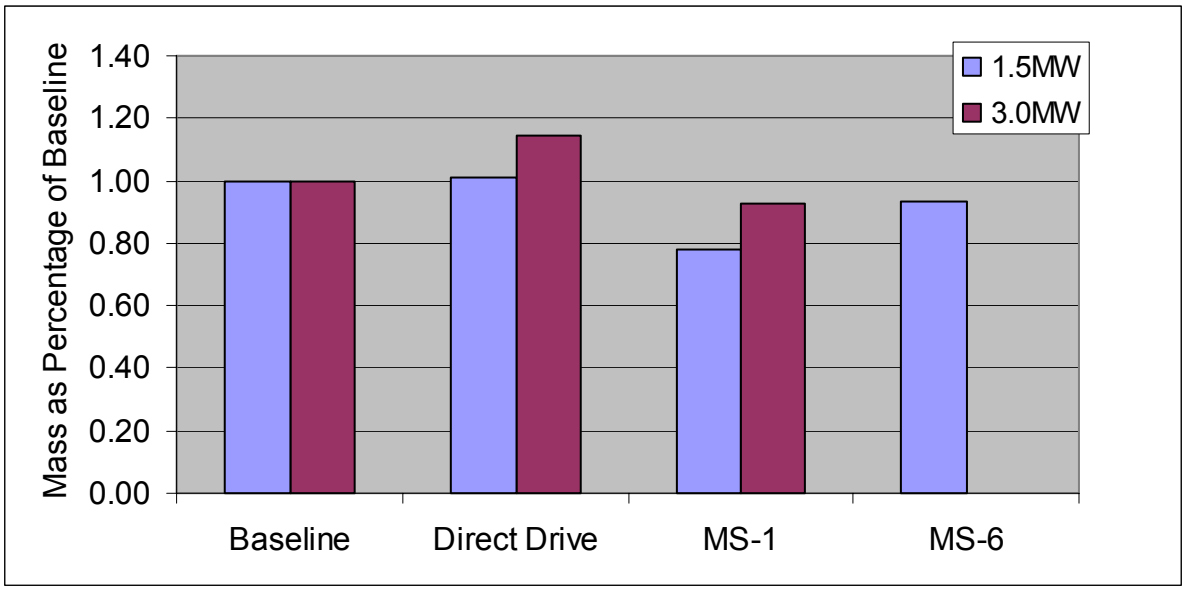

Figure 9-8. Relative drivetrain weights.

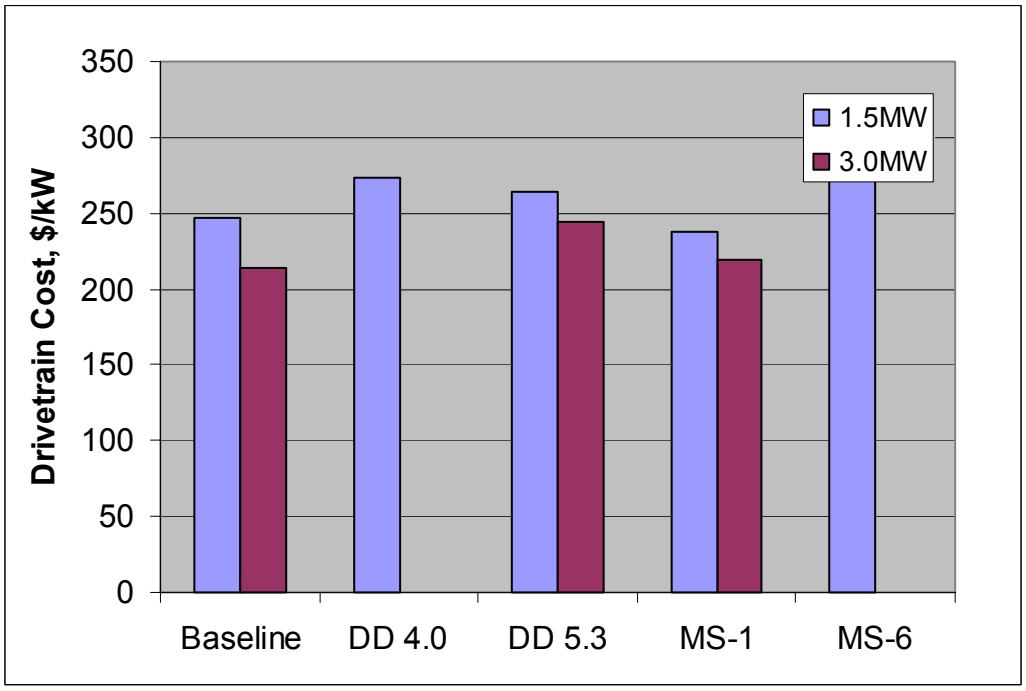

Figure 9-9. Drivetrain specific cost.

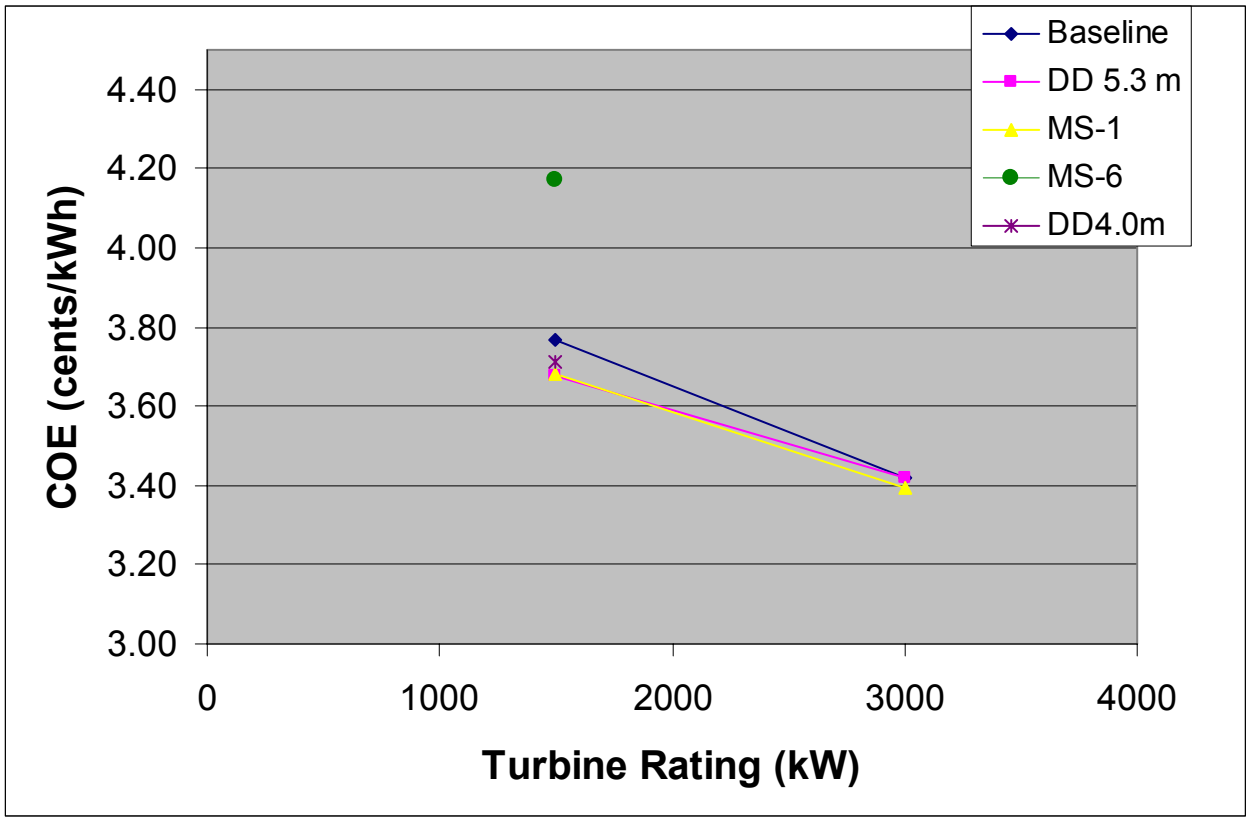

Figure 9-10. COE trends.

10 Conclusions and Recommendations

The main objective of the WindPACT study is to identify, design, and test an advanced megawatt-scale wind turbine drivetrain with the potential to lower the COE as compared to current commercial designs. In Phase I of the study, the mandate was to evaluate multiple innovative drivetrain topologies, compare these designs with a commercially available baseline configuration, and identify the drivetrain configuration with the most potential to reduce COE and become accepted as commercially viable in the marketplace. A mature wind turbine design that represents a significant installed base and has a known track record was used as a baseline for comparing the alternative drivetrain configurations in this Phase I comparison.

Our results in Phase I show strong potential for two advanced drivetrain configurations: the medium-speed/single-output (MS-1) design and the permanent magnet direct-drive (PMDD) design. Both configurations appear competitive with the industry state-of-the-art baseline turbine at the 1.5-MW and 3-MW power levels. A third configuration investigated in this study, the medium-speed/six-output design, proved non-competitive as a result of both high equipment and O&M costs, a product of the large number of generators and resultant high component count.

Inherent design characteristics of the PMDD drivetrain make its COE economics more favorable as the generator diameter increases. The main limitation on maximum diameter is the shipping constraints in the target markets. As the report describes, two diameters—5.3 m and 4 m—are appealing for the U.S. and European markets, respectively. As part of Phase I, we considered machine designs at both diameters.

Our analysis in Phase I predicted a reduction in COE for both the 4-m-diameter PMDD (1.5% reduction) and the MS-1 (2.2% reduction) configurations compared with the 1.5-MW baseline turbine. The 5.3-m-diameter 1.5-MW PMDD shows the lowest COE of all configurations—2.3% below the baseline turbine. Economies of scale favored all turbines at increased power levels. All 3-MW designs show a downward trend in COE compared with the 1.5-MW designs.

In selecting a drivetrain configuration for further development, the Northern team also considered factors unaccounted for in the COE calculations, such as technology and industry trends that impact future competitiveness and market acceptance. Of major importance is the maturity level of the intrinsic technologies utilized in the different configurations. It is far more likely that technological improvements will reduce costs for new PMDD designs than for mature baseline/gearbox designs. Magnet and power electronics costs, major factors in the capital cost of the PMDD configuration, continue to decline steadily. This reduction in cost will affect the direct drive configuration most significantly because the magnet cost is a large portion of the drivetrain cost. The same cannot be said of the gearbox costs that play significantly in the gear-based drivetrains. In fact, it is possible that gearbox costs will rise as a result of modifications made to overcome the shortcomings that lead to the high failure rates (Section 4).

Industry and market trends support the selection of the PMDD configuration for the megawatt-scale wind turbine market. The team identified strong interest in a commercial PMDD turbine design from wind project developers and owners, as well as from manufacturers looking for a competitive advantage. Direct-drive wind turbine drivetrain designs, both with and without PM generators, are seen by many in the industry as a commercially viable and attractive option. At least six independent companies in the wind industry are exploring and implementing direct-

drive configurations at various levels (Table 4-2 in Section 4). The Northern team has become convinced of the competitiveness and commercial viability of the PMDD wind turbine drivetrain configuration and recommends this configuration for detailed design, manufacturing, and testing in Phases II and III of the WindPACT project.

11 References

AGMA/AWEA-6006-AXX (January 2002). *Standard for Design and Specification of Gearboxes for Wind Turbine Generator Systems*. [Draft.]

AGMA/AWEA-921-A97. *Recommended Practices for Design and Specification of Gearboxes for Wind Turbine Generator Systems*.

Akagi, H. (2002). "Prospects of New Technologies for Power Electronics in the 21st Century." Published in Proceedings of the IEEE Power Engineering Society Transmission and Distribution Conference. Institute of Electrical and Electronics Engineers Inc.; p. 1399-1401.

ANSI C84.1-1995. *Electrical Power Systems and Equipment—Voltage Ratings (60Hz)*.

ANSI/AGMA 2001-C95. *Fundamental Rating Factors and Calculation Methods for Involute Spur and Helical Gear Teeth*.

Bauer, E. for Allianz Center for Technology (August 2001). "Risks and Damages." *Wind Kraft Journal*.

Bohmeke, G.; Boldt, R. for Aerodyn and LDW/AEG. *Direct Drive, Geared Drive, Intermediate Solutions: Comparison of Design Features and Operating Economics*. [Abstract.] http://www.aerodyn.de/eng/fr_eng.htm.

BTM Consult (2001). *International Wind Energy Development: World Market Update 2000; Forecast 2001–2005.*

Buhl, M. (Last modified March 5, 2002.) *Crunch: A Batch-Oriented Postprocessor for Wind Turbine Data Analysis.* http://wind2.nrel.gov/designcodes/crunch/.

Chertok, A., Lucas, E. for Certek Corporation (December 1994). *Development of a Direct-Drive Generator System for Utility-Scale Wind Turbines*. Preliminary Design Review Report. NREL Subcontract ZAA-4-12272-01.

"DirectDrive Turbines." (Autumn 2002). *WindStats Newsletter.* Published by Windpower Monthly. Vol. 15, No. 4; p. 6.

Directorate-General for Energy, European Commission and EWEA (1998). *Wind Energy—The Facts.* Volume 1, Technology.

Electric Power Research Institute and U.S. Department of Energy (December 1997). *Renewable Energy Technology Characterizations*. EPRI TR-109496.

Germanischer Lloyd (1999). *Non-Marine Technology, Part 1: Regulations for the Certification of Wind Energy Conversion Systems*. Rules and Regulations, IV.

Grauers, A. (September 1994). *Design of Direct-Driven Permanent-Magnet Generators for Wind Turbines*. PhD Thesis. Goteborg, Sweden: Chalmers University of Technology. Technical report No. 292.

Griffin, D. for Global Energy Concepts (April 2001). *WindPACT Turbine Design Scaling Studies, Technical Area 1: Composite Rotors for 80 to 120m Rotor*. NREL/SR-500-29492.

Hau, Erich (2000). "Wind-Turbines Fundamentals, Technologies, Application, Economics." New York: Springer-Verlag.

Heffernan, R. et al. (April 1996). *Direct-Drive Wind Turbine Feasibility Study*. Final report to Electric Power Research Institute. TR-104911. Research Project 1590-07.

IEC 61400-1 (1999). *Wind Turbine Generator Systems, Part 1: Safety Requirements.* 2nd edition.

IEEE Std 519-1992. *IEEE Recommended Practices and Requirements for Harmonic Control in Electrical Power Systems.*

ISO 2394:1998. *General Principles on Reliability for Structures*.

Jaecklin, A. (1997). "Integration of Power Components—State of Art and Trends." Paper presented at the 7th European Conference on Power Electronics and Applications. Trondheim, Norway.

Kelley, N.D; Buhl, M.L. Jr. (Last modified October 22, 2001.) *SNWind: A Stochastic, Full-Field, Turbulent-Wind Simulator for Use with BLADED and the AeroDyn-based Design Codes (YawDyn, FAST_AD, and ADAMS®).* http://wind2.nrel.gov/designcodes/snwind/.

Kerkman, R. et al. (1999). "AC Drives: Year 2000 (Y2K) and Beyond." Paper presented at the 14th Annual Applied Power Electronics Conference and Exposition, March 1999. Dallas, Texas. Vol. 1. pp. 28–39.

Laino, D.J. (Last modified June 19, 2001.) *IECWind: A Program to Create IEC Wind Data Files.* http://wind2.nrel.gov/designcodes/iecwind/.

Lorenz, L. (1997). "Systems Integration—A Milestone for Future Power Electronic Systems." Paper presented at the 7th European Conference on Power Electronics and Applications. Trondheim, Norway.

National Wind Coordinating Committee. (January 1997). *Wind Energy Costs*. Wind Energy Series, No. 11. http://www.nationalwind.org/pubs/wes/wes11.htm.

Princeton Energy Resources International for the U.S. Department of Energy (2001). *Wind Turbine: Materials and Manufacturing Fact Sheet*.

Rahlf, U.; Osthorst, R.; Gobel, W. (1998). "Bearing Overload Caused by Imprecise Definition of Connective Stiffnesses." Technical paper presented at DEWEK, 1998. Wilhelmshaven, Germany. http://www.aerodyn.de/eng/bearing_over.htm.

Shipley, E. (1991). "Loaded Gears in Action," Chapter 12. In: Townsend, D., ed. *Dudley's Gear Handbook*. 2nd edition. New York: McGraw-Hill.

Weh, H. et al. (1988). "Directly-Driven Permanent-Magnet Excited Synchronous Generator for Variable Speed Operation." Technical paper presented at ECWEC Conference, 1988. Braunschweig: Technical Institute of Braunschweig.

Weh, H.; Hoffmann, H. (1988). “New Permanent Magnet Excited Synchronous Machine with High Efficiency at Low Speeds.” Technical paper presented at ICEM, 1988. Braunschweig: Technical Institute of Braunschweig.

Weh, H.; May, H. (1988). “Achievable Force Densities for Permanent Magnet Excited Machines in New Configurations.” Technical paper presented at ICEM, September 1988. Braunschweig: Technical Institute of Braunschweig.

Note: These appendices are included to provide background information for this document. They are published here in the format received by NREL. NREL did not edit or format these documents.

Appendices

Appendix A

WindPACT Advanced Wind Turbine Drivetrain Study

DIRECT-DRIVE GENERATOR DESIGN

SUBMITTED BY:

Michael Salata
860-437-5767
msalata@ebmail.gdeb.com

Gregory Kudrick
860-437-5720
gkudrick@ebmail.gdeb.com

Spyro Pappas
860-437-5248
spappas@ebmail.gdeb.com

TABLE OF CONTENTS

1. INTRODUCTION A-9

1.1 SCOPE OF WORK A-9

1.1.1 GDEB SOW Qualifications A-9

1.1.1.1 GDEB Workscope A-9

2. GENERATOR TECHNOLOGY EVALUATION A-11

2.1 OVERVIEW A-11

2.2 GENERATOR TECHNOLOGY EVALUATION SUMMARY A-11

2.2.1 Selection Criteria A-11

2.2.2 Electric Machine Technologies Considered A-11

2.2.3 Summary of Electric Machine Evaluations A-13

2.2.3.1 Induction Machines A-13

2.2.3.2 Synchronous Machines A-14

2.2.3.2.1 Wound Field Synchronous Machines A-15

2.2.3.2.2 Radial Air Gap Permanent Magnet Synchronous Machines A-15

2.2.3.2.3 Axial Air Gap Permanent Magnet Synchronous Machines A-16

2.2.3.2.4 Transverse Flux A-17

2.2.3.2.5 Reluctance Machines A-17

2.2.3.3 Direct Current Machines A-18

2.2.3.3.1 DC Commutated Machines A-18

2.2.3.3.2 Superconducting and Normally Conducting Homopolar (Non-Commutated) Machines A-19

2.3 CONCLUSIONS A-19

3. GENERATOR CONCEPT DESIGN STUDY A-20

3.1 OVERVIEW A-20

3.2 GENERATOR CONCEPT DESIGN PROCESS A-20

3.2.1 Generator Parameter Definition A-21

3.2.2 Concept Design Development A-21

3.2.2.1 Concept Design Considerations A-21

3.2.2.1.1 Discussion A-22

3.2.2.2 Design Tool Description A-26

3.2.2.2.1 Proprietary Software A-26

3.2.2.2.2 Commercial Software A-27

3.2.2.2.3 Cost Estimator A-27

4. PRELIMINARY GENERATOR DESIGN OVERVIEW A-28

4.1 OBJECTIVE A-28

4.2 PRELIMINARY DESIGN PROCESS A-28

4.2.1 PM Generator Functional Requirements A-28

4.2.2 PM Generator Specification Development A-30

4.2.3 PM Generator Preliminary Design Trade Studies A-30

4.3 PRELIMINARY GENERATOR DESIGN DESCRIPTION A-31

4.3.1 Overview A-31

4.3.2 General Description A-31

4.3.3 Electromagnetic Design and Construction A-32
4.3.3.1 Design Considerations A-32
4.3.3.1.1 Stator Assembly A-33
4.3.3.1.1.1 Stator Laminations A-33
4.3.3.1.1.2 Slot and Pole Selection A-34
4.3.3.1.1.3 Stator Winding Conductors and Insulation A-34
4.3.3.1.1.4 Stator Slot Wedges A-34
4.3.3.1.1.5 Stator Winding Coil Turns, Number of Circuits and Connections A-34
4.3.3.1.1.6 Stator Slot and Back Iron Considerations A-35
4.3.3.1.2 Rotor Core Assembly A-35
4.3.3.1.2.1 Rotor Lamination Material A-35
4.3.3.1.2.2 Magnets A-35
4.3.3.1.3 Losses and Efficiency A-36
4.3.3.1.4 Converter Interface A-37
4.3.4 Mechanical Design A-38
4.3.4.1 Rotor Mechanical Design and Assembly A-38
4.3.4.2 Stator Mechanical Design and Assembly A-39
4.3.4.2.1 Stator Core A-39
4.3.4.2.2 Water Jacket A-39
4.3.4.3 Thermal Design A-40
4.3.4.3.1 Thermal Design Considerations A-40
4.3.4.3.2 Thermal Analysis A-40
4.3.4.4 Weight Analysis A-41

5. MANUFACTURE A-43

5.1 MANUFACTURE PROCESS A-43

5.1.1 Rotor A-43

5.1.1.1 Hub A-43

5.1.1.2 Magnets A-44

5.1.1.3 Poles A-44

5.1.1.4 Wedges A-44

5.1.1.5 Special Tooling A-45

5.1.2 Stator A-45

5.1.2.1 Laminations A-45

5.1.2.2 Stator Core Stack A-46

5.1.2.3 Water Jacket A-46

5.1.2.4 Wound Stator A-46

LIST OF FIGURES

Figure 4-1 Wind Turbine Generator Power Schedule A-29

Figure 4-2 Rotor Assembly..... A-32

Figure 4-3 Generator Layout A-39

LIST OF TABLES

Table 4-1 Preliminary Generator Design Dimensions and Weight A-32

Table 4-2 Permanent Magnet Properties..... A-36

Table 4-3 Generator Losses and Efficiency..... A-36

Table 4-4 Thermal Analysis Results..... A-41

Table 4-5 Generator Support Structual Weights..... A-42

Table 4-6 Generator Rotor Weights..... A-42

Table 4-7 Generator Stator Weight..... A-42

CONTRIBUTORS

Name	Organization	Telephone	E-mail Address
Daniel Kane	EB	860-437-5687	dkane@ebmail.gdeb.com
Al Franco	EB	860-437-5413	afranco@ebmail.gdeb.com
Spyro Pappas	EB	860-437-5248	spappas@ebmail.gdeb.com
Mihai Gheorghiu	EB	860-437-5433	mgheorgh@ebmail.gdeb.com

1. Introduction

This report documents the work conducted by General Dynamics (GD) Electric Boat Corporation (EB) in response to the Northern Power Systems (Northern) "WindPACT Advanced Wind Turbine Drivetrain Design" statement of work (SOW) dated July 13, 2000. This SOW was developed to support the National Renewable Energy Laboratory (NREL) objective to advance the present state of wind turbine drivetrain technology.

1.1 SCOPE OF WORK

The scope of work was to develop a preliminary generator design(s) supporting innovative wind turbine generator system drivetrain studies. These studies would support the down select of the most promising drivetrain concept and its components, for detailed design, fabrication and test.

1.1.1 GDEB SOW Qualifications

GDEB has been conducting research and development of the state of the art electromagnetic machines for more than a century. The research and development conducted to date has been high performance, low size and weight motors and generators capable of continuous operation in demanding environments. The primary area of this research and development focus has been on high torque, low speed permanent magnet (PM) machines which are analogous to the requirements for this direct-drive wind turbine generator application.

1.1.1.1 GDEB Workscope

Under this task, GDEB's role for the NREL-sponsored work is to assist Northern with the selection of a generator technology, perform conceptual generator designs that support various drivetrain configurations, and perform preliminary and detailed design of the candidate generator technology having the attributes required by Northern. These attributes are summarized below:

- Minimum size & weight (high torque density)
- High full and part load efficiency
- Minimum scheduled and unscheduled maintenance cost
- Mechanical, electrical and thermal design flexibility
- Meets the demanding environmental conditions of a wind turbine generator platform application
- Support the performance required of the wind turbine generator system/utility grid interface.

To facilitate execution of the workscope, it has been divided into three major task elements:

- **Task 1**: Generator Technology Evaluation

This task evaluated the mature existing technology base and promising electromagnetic technologies, which would require development for the wind turbine generator application. The above attributes, used as evaluation criteria, were used for down select to the candidate generator technology for further evaluation.

- **Task 2:** Generator Conceptual Design

This task developed the conceptual design(s) of the candidate generator technology. Electrical, mechanical, and performance criteria for conceptual generator design were based on preliminary functional requirements, preliminary power schedule and drivetrain conceptual layouts (i.e., multistage, single-stage and direct-drive concepts) as defined by Northern. Included, as part of this task, was an evaluation of non-recurring cost as well as the generator impact on the overall wind turbine cost of energy (COE).

- **Task 3**: Generator Preliminary Design

This task performed the preliminary design of the generator and evaluated its performance relative to the wind turbine generator system electrical and mechanical goals. Included are the electrical performance, electrical and mechanical interfaces, and mechanical configurations supporting integration into the wind turbine structure. Completion of this phase will lead to the detailed generator design for the purpose of manufacture and later testing at the NREL facilities.

2. GENERATOR TECHNOLOGY EVALUATION

2.1 OVERVIEW

GDEB has conducted an evaluation of electromagnetic machine (motor and generator) technologies. This technology evaluation considered those machines most compatible with providing the low speed, high torque duty required of a direct-drive, wind turbine generator system. The purpose of this evaluation was to determine those candidate technologies with the highest potential for satisfying the selection criteria provided in Paragraph 2.2, for generator service. These criteria were established to support down select to a generator technology that would best complement the wind turbine generator platform design and performance goals.

2.2 GENERATOR TECHNOLOGY EVALUATION SUMMARY

2.2.1 Selection Criteria

This evaluation considered mature generator technologies with a well-established base in industry. It also included less mature, but promising generator technologies considered "near-term" as well as "far-term." It was considered that the "term" of development is commensurate with the extent to which these technologies are driven by industrial development.

The selection criteria established for the electromagnetic machines are as follows:

- High Power/Torque Density
- High Efficiency
- Ease of Manufacture
- Low Life Cycle Cost/High Reliability
- Term of Technology Development
- Heat Removal Capability
- Maintainability
- Maturity of Industry/Manufacturing Base.

2.2.2 Electric Machine Technologies Considered

Alternating current (AC) and direct current (DC) machine technologies were considered for this evaluation.

AC machine technologies included:

- Induction
- Synchronous
    - Wound Field
    - Permanent Magnet (PM) Radial and PM Axial Air Gap
    - Switch Reluctance
    - Transverse Flux.

DC machine technologies included:

- Commutated
- Superconducting and Normally Conducting Homopolar (Non-Commutated).

A machine with a high torque/high power density and high efficiency at a low design operating speed is considered for the direct-drive wind turbine application. This is because of its potential for providing a significant reduction in the cost of converting wind derived mechanical power to electric power by eliminating the geared speed increaser, typically used in wind power applications, and its associated operation and maintenance costs. Low-speed, high-power direct-drive electric machines are not common in industrial applications and are almost exclusively limited to extremely large hydroelectric generators and special application low-speed high-torque motors. Therefore, the technology of low-speed, high-torque machines requires thorough evaluation to determine their suitability for a direct-drive wind turbine application.

Electric machines, whether operating as motors or generators, are generally categorized as having either a radial or axial air gap, with at least one machine type being a combination of both (i.e., transverse flux). The path that the air gap magnetic flux travels relative to the machine's rotor axis (i.e., axis of rotation) distinguishes the air gap type. In the axial air gap machine, this path is parallel to the rotor axis. Conversely, in the radial air gap machine, this path is radially outward from the rotor axis. Radial and axial air gap machines can be further subdivided by the type of electrical power supplied to them (for motor application) or generated by them (for generator application). This power is either AC or direct current DC. The excitation that creates the magnetic flux of these machines originates with either AC or DC power, except in the case of permanent magnet machines, where the excitation is provided by the permanent magnets themselves. Therefore, no external source of excitation is required.

The radial air gap AC machines that have been considered for this evaluation are:

- Induction
- Synchronous

- Wound Field
- Switch Reluctance
- Permanent Magnet (PM) Radial Air Gap
- Transverse Flux.

The radial air gap DC machines considered are:

- Commutated
- Superconducting and Normally Conducting Homopolar (Non-Commutated).

The axial air gap machine considered is:

- PM Axial Air Gap.

2.2.3 Summary of Electric Machine Evaluations

2.2.3.1 Induction Machines

The induction machine is the most common of all industrial machines because of its mature development, simple and robust design, and low maintenance and manufacturing costs. The stator (stationary component) of the induction machine is typically comprised of embedded conductors wound in a multiple phase and pole configuration. These conductors are placed into the ferromagnetic laminations forming the stator core. The rotor (rotating component) of the induction machine is constructed of either conducting bars or coils. The induction machine using coils on the rotor is referred to the wound rotor induction machine. It is a less common type of induction machine and was used where it was necessary to control its speed and torque characteristics in industrial applications. Although offering controllability before the solid-state control revolution, wound rotor induction machines have been slowly phased out from industrial usage. This is because of the larger size required to accommodate its rotor windings, the cost, maintenance and space issues associated with the rotor winding controls (i.e., resistor banks, contactors, relays, etc.) and the maintenance issues associated with the rotor slip rings. A more common form of rotor construction is with conducting bars positioned parallel to the rotor axis and short-circuited at both ends by conductive rings to form a "cage." This type is referred to as a squirrel cage induction machine. The bars and rings of the squirrel cage rotor must be electrically conductive and are typically made of either copper or aluminum.

Like all high-power AC machines, the induction machine stator is excited from a multi-phase AC power source, which is necessary to create a symmetrically rotating magnetic field in the stator. The rotational speed of this magnetic field, known as the synchronous speed, is proportional to the power source frequency. As its name implies, this machine operates on the principle of magnetic induction that results from the relative difference between the speed of the rotating magnetic field of the stator and the speed of the rotor. This difference of speed, characteristic of all induction machines, is known as the "slip." During motor operation, the rotational speed of the rotor is lower than the synchronous speed of the stator allowing the rotor

conductors to constantly pass through or "cut" through the stators rotating magnetic field. This process induces currents that circulate throughout the rotor cage. The induced current produces a rotor magnetic field of the same pole number that is proportional in strength to the stator field that induced it. It is the interaction of the rotor's induced magnetic field with the stator's rotating magnetic field that generates the torque to produce motor shaft rotation. If the motor shaft load is increased (higher torque demand), the rotor slows down further and the increased slip between the rotor and stator fields results in higher developed motor torque that is required by the load. Eventually, a maximum torque point is reached beyond which the motor will stall.

Induction machines can also be operated as generators. By coupling the induction machine to a prime mover that can drive the rotor above the synchronous speed of the stator, a negative speed difference, or negative slip will be established. With a properly excited stator, the mechanical power of the prime mover will be converted to electrical power by the interaction of the rotor and stator fields in the negative slip mode, thus functioning as a generator.

Induction machines were initially considered by GDEB for the low-speed, high-torque application because of their rugged manufacturing simplicity, low cost, and ease of maintenance. However, directly driven induction machines were discounted for this application for several reasons. At typical electrical system operating frequencies, a low rotational speed, direct-drive induction machines would require a large pole number. For an induction machine, increasing its number of poles reduces its efficiency and power factor, which does not support a low operating cost. Low operating efficiency and power factor also increase thermal losses that must be removed from the machine, reducing power throughput. Removal of these losses adds cooling system complexity, thus reducing its advantage of simplicity of design, increases its manufacturing cost and decreases its torque density. A low power factor machine also impacts the cost, size, and weight of its power conversion equipment as greater ampacity is required to handle the reactive current necessary to properly excite the machine. Constructing the machine with a small air gap can generally make power factor improvements. However, the design and construction of a large-diameter machine with a small air gap, and the necessary mechanical tolerances, negatively impacts its manufacturability and increases its cost.

Induction machine technology is mature, making its industrial base strong. Likewise, the design, construction, and life-cycle costs are very attractive for machines of common ratings and speeds. It is the induction machine's low power factor and efficiency and the impacts for compensating for these that make them poorly suited for a low-speed, direct-drive wind turbine generator application.

2.2.3.2 Synchronous Machines

In a synchronous machine, the rotational speed of the rotor is the same as the rotational speed of the magnetic field of the stator. Because there is no speed difference between the rotor and stator magnetic fields, they are said to be rotating synchronously (hence the name synchronous machine). The interaction of the rotor's magnetic field with the stator's magnetic field generates torque to produce motor shaft rotation in response to a mechanical load. When connected to a suitable prime mover, the synchronous machine converts the prime mover mechanical torque to electrical power and operates as a generator. This is performed by the magnetic flux from the rotor sweeping the stationary windings of the stator and inducing a voltage in these windings.

This voltage is called the back electromotive force (BEMF) and, when connected to a load, a current will flow, thus producing power. The rotor field of synchronous machines is created by electrically powered field coils or by permanent magnets mounted on the rotor. Because the synchronous machine does not have to induce the rotor magnetic field from the stator's rotating field, as with induction machines, the synchronous machine inherently has a higher power factor that allows a much larger mechanical air gap when compared to other electric machines. This facilitates its manufacture and reduces the associated manufacturing cost.

2.2.3.2.1 Wound Field Synchronous Machines

The rotor construction of a wound field synchronous machine consists of a ferromagnetic pole head with a current carrying coil of several turns for each rotor magnetic pole. The rotor's field windings are normally energized by a DC source by one of two methods. The most widely used method is through a slip ring and brush assembly. The second method is by brushless excitation. This method employs a rotary AC exciter consisting of windings mounted on the shaft (exciter armature), which has a voltage induced in it by a set of field windings mounted on the motor frame (exciter field). The induced AC voltage in this rotary exciter is fed to a bridge rectifier, also attached to the rotor shaft, which supplies DC current to the main field for excitation of the generator.

Wound field synchronous machines are generally comparable in volume and weight to low pole number induction machines. As pole number increases, the wound field synchronous machines volume, weight and performance (i.e., efficiency, power factor) attributes exceed those of the induction machine. While the wound field synchronous machine has an efficiency and power factor advantage over the induction machine, the requirement to supply DC current to the main field winding lead to additional resistive heating losses that impact the machine efficiency and complicate its cooling scheme. The wound field synchronous machine has been considered for low-speed, high-torque motor applications based on its robustness and simple construction, as well as its improved efficiency and power factor. However, either brushed or brushless excitation system introduces additional maintenance issues and associated cost when compared to an induction machine. Wound field synchronous machine technology is mature, it is employed for most low-speed, high-torque industrial applications and hence its technology and industrial base is well developed. However, other alternative synchronous machine technologies, not subject to the issues associated with the need to provide active rotor excitation, have been further considered for the direct-drive, wind turbine generator system application.

2.2.3.2.2 Radial Air Gap Permanent Magnet Synchronous Machines

Radial air gap PM machines are among the simplest and most robust of synchronous machine technologies and have a rapidly growing industrial as well as military interest. The radial air gap PM machine is essentially a wound rotor synchronous machine whose rotor does not require an external source of power. Both have identical stator designs and excitation provided by the externally supplied DC field coils of the wound field machine is now supplied by permanent magnets. By using permanent magnets for rotor excitation, the size, weight, and electrical/thermal loss penalties associated with exciting the rotor field are eliminated. The result is increased machine efficiency, torque density, cooling system simplicity, and reduced maintenance and life-cycle cost. Present rare-earth permanent magnets have the ability to

produce large quantities of magnetic flux within a very small volume and geometry. This permits high pole number designs, complementing the low-speed, direct-drive wind turbine generator application. The radial air gap PM machine inherently requires a similar amount of maintenance as the induction machine because it is comparable to its simplicity and robustness, while being far superior to that of a wound field synchronous machine for the reasons stated above. Because the stator for the radial air gap PM machine is identical to that of the induction and the wound field synchronous machines, the manufacturing industrial base is in place and is well established. Because PM technology is experiencing a rapid commercial and military interest, the industrial base for PM rotor manufacture for high power machines is also increasing. This makes the PM synchronous machine a prime candidate for the direct-drive, wind turbine generator application.

2.2.3.2.3 Axial Air Gap Permanent Magnet Synchronous Machines

Axial air gap machines typically consist of a thin and relatively large-diameter rotor disc to which the PMs are attached. The wound stator is a similarly sized diameter disc, lying adjacent to the rotor, whose shaft passes perpendicularly through it. Axial air gap PM machines can have one- or two-sided stator windings, meaning that the rotor disc of which the permanent magnets are mounted may be sandwiched in-between two parallel stator discs. This gives the axial air gap PM machine the potential for very high torque densities, which is why they have received consideration for low-speed high-torque motor applications. Also, they can be more readily applied when axial stack-up length is critical because the machine diameter to length (D/L) ratio favors diameter over length.

To achieve a high torque density, the axial air gap PM machine is constructed with the single-rotor, dual-stator configuration. A drawback to this configuration is that heat removal becomes significantly more complex than for the simpler radial air gap PM machine. Also, to achieve high torque density, the rotor, containing the permanent magnets requires placement very close to and between the dual stator heat sources. This configuration causes additional design concerns as the magnetic properties of rare-earth magnets degrade with increases in temperature and can be completely demagnetized should the temperature exceed its Curie temperature.

Axial gap machines are currently in limited stages of development for low-speed, high-torque applications. Therefore, the industrial base for axial air gap PM machines is not well developed. Although the rotor is not considered having greater design complexity than the radial air gap rotor, its stator is considered a more complex arrangement with each stator half requiring a complete set of multi-phase, multi-pole armature windings and their own separate ferromagnetic flux return paths. Additionally, because of the unique magnetic flux pattern in the stator-rotor-stator configuration, the three-dimensional magnetic modeling required to design and accurately predict the performance of this machine is considerably more labor and cost intensive, than performance of two-dimensional analysis, which is sufficient for the radial air gap type.

Although axial air gap PM machines are attractive because of their potential for high torque density, these machines present significant engineering challenges and development issues when compared to the equivalent to radial air gap PM machines. These areas include mechanical arrangement, cooling system complexity, and methods of performing and validating their electromagnetic design. Because of the technical issues identified above, it is considered that the

axial air gap PM machine represents a higher technical development and cost risk if currently considered for the direct-rive wind turbine generator application.

2.2.3.2.4 Transverse Flux

The transverse flux machine has been considered for the direct-drive wind turbine generator application because of its potential for a high torque/power density.

The transverse flux machine configuration consists of a ring of magnets mounted on ferrous material on the rotor and a "C" core with one embedded conductor, which comprises the stator. The rotor is housed and rotates within a circumferential annulus formed by the "C" core. A typical construction configuration of the transverse flux machine attaches the rotor to the machine shaft using a non-metallic ring. A ferrous ring holding the magnets is then attached to this non-metallic ring. The ferrous ring holding the magnets is positioned perpendicular to the non-metallic ring and parallel to the axis of the machine shaft. This configuration lends itself well to permit a torque density increase by a series or series-parallel mechanical arrangement of the ferrous rings. For example, these rings can be attached in series and oriented in the radial direction (i.e., perpendicular to the shaft axis). Several series rings may also be arranged and attached in a parallel configuration and then oriented along the axis of the machine shaft. The rotor can be fabricated from many small magnets and, therefore, each ring can have a very high pole number that is an advantage for a low-speed generator application. The embedded conductor of the stator is excited by an AC source that produces the rotating magnetic field, as in other AC rotating machinery. Also, as with the other AC machines, it is the interaction of this magnetic field with the rotor's magnetic field that permits the motoring or generator operating modes.

Thermal management of the heat developed in the rotor of the transverse flux machine is technically challenging. This is because the rotor containing the permanent magnets is surrounded by the two arms of the circumferential "C" core stator. Hence, the machine's rotor is located between two potentially large heat sources, limiting the simplicity of rotor cooling arrangements. This issue is similar to the axial air gap machine where there is concern for the control of the thermal environment of the temperature sensitive rare earth permanent magnets mounted on the rotor.

Transverse flux machine technology is currently in the early developmental stage. Therefore, the industrial base for this technology is immature. Compared to the other machine technologies identified, the rotor and stator components of the transverse flux machine are highly specialized and complex. This complexity contributes to concerns with the robustness required for the severe duty that may be imposed by the direct-drive wind turbine generator application, as well as the design and manufacturing cost and technical risk associated with this topology.

2.2.3.2.5 Reluctance Machines

The operating principle of the reluctance machine is based on the path of a magnetic field to follow its path of least reluctance (i.e., magnetic resistance). For the reluctance machine, the path of least reluctance to the rotating magnetic field of the stator is obtained by the rotor's tendency to align with the stators rotating magnetic field such that the lowest state of potential energy is

attained. For the rotor to align with the stator's rotating magnetic field, the rotor is designed from a ferrous material that carries the flux from the stator. It is also designed with salient poles, thus giving variations in air gap length around the circumference of the air gap. It is this saliency that causes rotation by the rotor's attempt to create the lowest reluctance path for the flux to travel. For the reluctance machine, there is no excitation, PM or otherwise, required.

The reluctance machine has been considered for the direct-drive wind turbine generator application because it is the simplest, most robust and reliable of the machine types described. The reluctance machines rotor is a simple stack of laminations, and the stator is identical to the other common AC machine types described. Therefore, it is considered that its industrial base is strong.

Because the reluctance machine develops only reluctance torque, which is a relatively small percentage of a typical excited salient pole AC machines torque, its torque density is relatively low. Therefore, the machine is significantly larger and heavier when compared to other AC machine types at competitive power levels. This major disadvantage is the reason that the reluctance machine has not been considered further for the direct-drive wind turbine generator application.

2.2.3.3 Direct Current Machines

2.2.3.3.1 DC Commutated Machines

Direct current (DC) commutated machines have been considered for the direct-drive wind turbine generator application. These DC machines were once considered the workhorse of the industry for generator applications requiring a DC power source and motor applications supporting variable speed, high torque loads. DC-commutated machines have several characteristics that may be desirable for a direct-drive wind turbine generator application. This machine can produce rated torque throughout its entire speed range, and its speed-torque characteristics can be easily changed using simple control means. Also, because the output voltage, when operated as a generator, is DC, this offers the potential for eliminating a stage of power conversion equipment that may be needed to interface with the utility grid end load.

Commutated DC machines are supplied with (motor action) or produce (generator action) DC power using a commutator. A mechanical carbon brush sliding contact system is used in conjunction with the commutator to alternate the polarity of the machine's armature (rotor) as it rotates through its cycles of revolution. Motor or generator action is the result of the interaction of the stator and armature DC fields as a result of the commutator action.

There are several disadvantages with DC-commutated machines, most which are related to the commutator system. It has moderate to low torque/power density because of the additional machine length and volume required to support the commutator and brush rigging assembly. Also, design flexibility is limited because of the necessary orientation of the commutator and spacing of its conducting bars. These design issues limit flexibility with selecting its aspect ratio (length/diameter) and operating voltage as increased spacing is required between the conducting bars at higher voltages to maintain the dielectric integrity between them. The DC commutated machine also introduces a significant maintenance and life cycle cost penalty. The sliding contact

carbon brushes produce conductive carbon dust that requires frequent removal from the interior of the machine, while the continuous contact between the commutator and brushes results in the need for periodic commutator resurfacing. Generally, the industrial base for the DC commutated machine is weakening as its versatility and favorable operating characteristics are being duplicated with less costly and less maintenance intensive AC motors and drives. It is for these above reasons that the DC commutated machine has been discounted for further consideration for the direct-drive wind turbine generator application.

2.2.3.3.2 Superconducting and Normally Conducting Homopolar (Non-Commutated) Machines

The Homopolar machine has been considered for the direct-drive wind turbine generator application because it is a DC machine that does not require a commutator for operation. Also known as the Faraday machine, it is the only true DC machine having a uniform, single polarity in the air gap allowing for continuously smooth torque output. The rotor consists of parallel conductors, which may be wound with copper in the normally conducting Homopolar machine or with low- or high-temperature superconducting material. Superconducting material, which has zero ohmic resistance when in the proper temperature environment, is used to develop a large rotor magnetic field without suffering the large electrical losses that the normally conducting machine would develop for the equivalent ampere-turns. The stator of both types of homopolar machines are made of low-voltage disks, which are mechanically in a parallel orientation, but are electrically connected in series through brushes and slip rings. Because of this, these machines experience many of the same design flexibility issues (i.e., aspect ratio), operation and maintenance issues discussed for the commutated DC machine.

Homopolar machines are low DC voltage, high-current machines. This is because of the low back electromotive force developed across each disk, which can be from fractions to tens of volts. Therefore, developing the DC voltage level that is usable to the power conversion equipment of a wind turbine generator system may require the machine to have a large number of stator disks, resulting in an impractical machine length. Because each disk is connected in series with brushes, additional disks would be required to compensate for the voltage drop across the brushes, further perpetuating this issue.

There is a very limited industrial base for normally conducting Homopolar machines, whose typical application is for use as DC generators in electroplating process plants. The superconducting Homopolar machine, whose known advancement has been to 3,000 horsepower and developed as a test platform, has no industrial base.

Based on the above discussion, both normally conducting and superconducting Homopolar machinery have been discounted for the direct-drive wind turbine generator application.

2.3 CONCLUSIONS

Based on the machine attributes defined as selection criteria in Paragraph 2.2.1, GDEB has concluded that the machine technology that is best suited for the direct-drive wind turbine generator application the is radial air gap PM synchronous machine.

3. GENERATOR CONCEPT DESIGN STUDY

3.1 OVERVIEW

This task developed generator concept designs in support of wind turbine generator drive train parametric studies. The purpose of these studies was to develop and integrate the conceptual designs of each major component of various wind turbine generator drive train configurations. The resulting drive train configurations would then be evaluated. This evaluation would consider wind turbine system performance, capital and life cycle cost, cost of energy (COE), and technical and programmatic risks associated with each drivetrain concept. The result of this evaluation would lead to selection of the generator concept design, which would be further developed during the preliminary design phase of this program.

The drivetrain configurations investigated were:

1. Single-Output Gear-Driven Generator: This configuration consists of a single-stage speed increasing gearbox, with its low-speed input shaft coupled to the wind turbine rotor and its medium-speed output shaft coupled to the generator.

2. Multi-Output Gear-Driven Generator: This configuration consists of the wind turbine rotor coupled to the single low-speed input drive shaft of a speed-increasing gearbox. The gearbox has multiple medium-speed output shafts, each coupled to a generator.

3. Direct-Drive Generator: The direct-drive configuration consists of the wind turbine shaft coupled directly to the generator shaft.

3.2 GENERATOR CONCEPT DESIGN PROCESS

GDEB performed numerous generator concept designs that supported the performance of the wind turbine generator drivetrain parametric studies. The elements of the generator concept design process included the following:

- Generator Parameter Definition
- Concept Design Development
  - Concept Design Considerations
    - Electrical Design
    - Magnetic Design
  - Design Tool Description
    - Proprietary Software
    - Commercial Software

- Generator Cost Builder.

Each element of the concept design process is further described below:

3.2.1 Generator Parameter Definition

To support the parametric studies, multiple generator concept design iterations were performed for each drivetrain configuration identified above. The initial iterations considered high-level generator design parameters provided to GDEB, such as rating, speed, and basic allowable volumetric envelope. From these parameters, a generator concept point design was performed for each drivetrain configuration. During successive iterations of this process, lower-level design parameters were defined. These included generator dimensions and allowable aspect ratio (diameter/length), voltage, and power factor. For each iteration, further refinement to the generator concept point designs was performed. This iterative process was necessary to accomplish the following:

- Develop a database of rough order of magnitude (ROM) generator dimensions, weights, and costs supporting the drivetrain study.

- Provide early identification of generator design and performance issues as lower-level component and system requirements were defined. This was necessary because the components interfacing with the generator, particularly, the solid-state power conversion topology and its control strategy, were concurrently evolving.

The parameter definition process continued until the generator concept point designs provided sufficient detail to support completion of the wind turbine generator drivetrain study. This process also provided reasonable assurance of compatibility between the generator and the wind turbine system interfaces, permitting downselect to a final generator concept design.

3.2.2 Concept Design Development

3.2.2.1 Concept Design Considerations

The design of electromechanical machinery is complex, and many design parameters must be considered for a specific application. Many of these are interdependent, and trade-offs must be performed to determine a balance between desired mechanical envelope and weight, performance and capital and life-cycle cost to meet the COE requirements of the wind turbine generator system.

Each drivetrain concept presented unique challenges for its respective concept generator point design. The requirements defined for each generator included power rating, voltage, speed and frequency, aspect ratio (diameter/length ratio), and mechanical configuration. The following summarizes the basic generator characteristics necessary to support each drivetrain configuration:

- <u>Single-Output Gear-Driven Generator</u>: This generator is a medium AC voltage and frequency, high constant speed, low pole number machine. To support this drivetrain

configuration, the generator aspect ratio is approximately one (i.e., generator length and diameter are approximately equal).

- Multi-Output Gear-Driven Generator: This generator is a medium AC voltage and mid-to-high frequency, mid to high constant speed, low pole number machine. To support this drivetrain configuration, the generator aspect ratio is less than one (i.e., generator length is greater than its diameter).

- Direct Drive Generator: This generator is a low AC voltage and frequency, low and variable speed, high pole number machine. To support this drivetrain configuration, the generator aspect ratio is significantly greater than one (i.e., generator length is much smaller than its diameter).

3.2.2.1.1 Discussion

There are many considerations that must be addressed in the design of electromechanical machinery. These considerations must take into account the desired machine performance, as well as the restrictions placed on the design to conform to the electrical, mechanical, and physical requirements of the component for integration into an overall system. To illustrate the electrical, mechanical, thermal, and manufacturing considerations required for a conceptual design, several simplified relationships are described. These relationships also show the interdependence of many generator design parameters. It is these interdependent parameters for which tradeoffs are required, as the concept design transitions to a preliminary design that is further developed to support a specific application. These relationships are provided in terms of power, flux, voltage, speed, frequency, and the machine geometry necessary to meet the requirements imposed on the concept generator for each drivetrain configuration studied.

The electrical power (P) produced by a generator is proportional to its voltage (V) and current (I). It is also proportional to the product of the flux density (B) in its air gap, current loading (A), synchronous speed (N_s), and electromagnetic volume. The electromagnetic volume of the generator (D^2L) is approximated by the square of its rotor outer diameter (D) and the rotors active length (L).

The voltage developed by the generator is proportional to the number of series turns (N) of the stator coils comprising each phase winding, the total flux of the machine (φ_t), the flux per pole (φ_p), and the time rate of change of this flux ($d\varphi_p/dt$) cutting the stator coils. In terms of B, the generator voltage is also proportional to its rotational velocity (v).

The stator core is formed from stacked punchings of laminated electrical steel, which comprise the stator backiron and teeth, and stator slots that are between the stator teeth. The function of the stator core is to contain the coils of the generator within its slots, while the teeth and backiron act as a flux transmission path for the generators magnetic circuit. The generator phase windings are comprised of coils that are embedded in the slots of the stator. The quantity and geometry of the slots is determined in conjunction with the stator diameter (D_{stator}), number of stator poles (p), number of phases, and the desired electrical performance (i.e., voltage waveform quality). The coils may be embedded in the stator slots in a series winding configuration or the coils may be divided into parallel groups (i.e., circuits) based on the output voltage requirements of the

generator and the current required to develop rated generator power. The arrangement of coils to produce stator poles, the number of stator poles, the pitch of these poles (T_s) and air gap flux density B determine the required depth of the stator backiron to maintain an acceptable flux density (B_c). The depth of the backiron is selected to give good magnetic performance, acceptable heat-transfer characteristics and mechanical stiffness to facilitate manufacturing. The steel used for the stator laminations and the lamination thickness (t) ares selected for on the basis of magnetic properties and resistance to generator frequency dependent (hysteresis [P_h] and eddy current[P_e]) losses.

The source of the generator flux is rare earth permanent magnets. The permanent magnets, with the pole pieces, comprise the rotor poles (p) which is the same number as the stator poles. These poles are mounted on the rotor with a pitch (T_r) that is determined by the number of poles and the rotor diameter (D_{rotor}). Rotor rotation creates the time rate of change of flux necessary to generate voltage as described above. This time rate of change also determines the frequency (f) of the generated voltage, which is proportional to the generator rotational velocity and number of rotor poles. If rotation is at the design speed of the generator, the generator is operating at synchronous speed.

The relationships described in the above discussion are:

(1) $V \propto N\, d\varphi / dt$

(2) $V \propto (B)(L)(v)$

(3) $P \propto (D^2L)\,(B)(A)(\,N_s\,)$

(4) $P \propto (V)(I)$

(5) $N_s = (120\ f) / p$

(6) $B \propto (\varphi_t\ ) / \pi\,(D)\,(L)$

(7) $\varphi_t \propto V / N_s$

(8) $\varphi_p \propto \varphi_t\ / p$

(9) $T_s\ \propto \pi\, D_{stator} / p$

(10) $T_r \propto \pi\, D_{rotor} / p$

(11) $B_c \propto \varphi_t\ / 2p$

(12) $V \propto (\varphi_t\,)\,(v) / \pi\,(D)\,(L)$

(13) $P_h \propto (f)(B) / d$

(14) $P_e \propto (f^2\,)\,(B^2\,) / t$

The following provides a general discussion of the major aspects of a concept generator design, with reference to the parametric relationships provided above. The major design aspects include its electric and magnetic design, technical and performance issues and practicality of manufacture. These aspects were considered when developing concept generator designs for the various drivetrain applications.

Electrical Design: The primary function of the electrical design is to establish the terminal voltage that is compatible with the generator's power converter load or direct connection to the utility grid. The electrical design considers developing this voltage within the parameters of power rating (3 and 4), speed (2) and allowable generator diameter and length (12) defined for each drivetrain configuration. The interdependency of these parameters, how they relate to the electrical design of the generator and how they can impact its geometry (aspect ratio) and weight can be seen from review of relationships (1) through (4) and (12). The electrical design of the generator must be materially cost effective and thermally efficient to minimize the generator capital cost and COE. The electrical design considers the generator winding topology (i.e.: series turns per phase and number of circuits), current loading and the dimensions of the slots in which the stator coils are embedded. Since the slots are on the inner bore of the stator, the number of slots, and slot geometry necessary to contain the coils must be considered based on the limitations of diameter and length imposed on the generator by the specific drivetrain configuration. Additional considerations included in the electrical design of the stator are:

- Maximizing the slot geometry to maximize the cross sectional area of the coils embedded in them. Maximizing this area minimizes winding ohmic losses, promoting a high efficiency generator and simplified cooling system design.

- Maximizing the slot geometry to accommodate the winding and slot insulation systems. These insulation systems provide the dielectric strength required by the level of generator voltage. These insulation systems maintain electrical integrity between turns of the coils, between the windings of each generator phase and between the phase windings and ground.

- Determining the spacing between slots for the stator teeth. Adequate spacing between the slots permits a stator tooth thickness of sufficient structural integrity to resist bending due to the reaction torque of the generator. This reduces generator winding movement as well as coil and slot insulation system fatigue and mechanically induced failure.

- Output voltage waveform. This considers the number of phases in combination with the number of stator slots and generator poles. Higher slot/pole/phase ratios reduce the harmonic content of the generator output voltage waveform. This improves the output voltage waveform quality and reduces generator heating and torque perturbations by minimizing the generation of current harmonics.

Magnetic Design: As with the electrical design, the magnetic design is geometry dependent and impacts all aspects of the generator size, weight, performance and cost. It must also be magnetically and thermally efficient, and materially cost effective consistent with minimizing the COE.

The magnetic design establishes the magnetic circuit between the rotor and stator, and the density of the flux (6) crossing the air gap between them. This air gap flux density (6) establishes the time varying flux (with rotor rotation) originating from each pole (8) on the rotor. It is the interaction between the generators magnetic circuit and electric circuit that establishes the total flux of the generator (7), producing the desired generator output voltage (1 and 2) and generator power (3 and 4). Since the magnetic circuit links both generator rotor and stator through the air gap, the magnetic design must carefully consider the design of each, in a concurrent manner.

On the rotor side of the air gap, the magnetic design considers the generator diameter, length and operating frequency to support the system interface requirements serviced by each drivetrain configuration. The diameter is an important design parameter since it determines the rotor circumference available to accommodate the permanent magnets and pole head laminations that comprise the rotor poles. The number of poles is an important consideration since it, in conjunction with the generator speed determines its desired operating frequency (5). The circumference and length of the rotor are important parameters since they determine the pole pitch (10) of the rotor and the dimensions of the permanent magnets used. Both permanent magnet width and length dimensions must be carefully considered to optimize:

- Magnetic Efficiency: An efficient magnetic design maximizes the use of available flux from its magnetic energy source and minimizes the opposition (reluctance) to it crossing the air gap. To achieve a magnetically efficient design, the dimensions of the permanent magnets are carefully considered. One consideration is selection of the magnet width to minimize the amount of flux "leaking" back to the magnet, since the leakage flux produces no useful work. The other consideration is the magnet length as the permeability of the rare earth magnetic material contributes to the total reluctance of the air gap. Minimizing the reluctance will thus maximize the flux crossing the air gap. Trading off these dimensions results in a compromise to yield the highest magnetically efficient design.

- Material Cost: Rare earth permanent magnets represent a significantly higher cost per pound than other materials (i.e.: copper, magnetic steel) used in the construction of the generator. Therefore, a high magnetic efficiency will minimize the magnetic material requirements and effectively reduce the generator cost.

- Power Density: Minimizing the magnetic material requirements needed for the generator to develop the equivalent electrical power lends to a higher generator power density, as less magnetic material requires less volumetric space.

On the stator side of the air gap, the stator functions to complete the magnetic circuit between the air gap and the rotor by providing a flux path through its teeth and backiron. The stator magnetic design considers the number of poles and pole pitch (9) since these establish the diametric limits of the stator allowed by the particular drivetrain configuration. The number of poles, in conjunction with the total flux of the machine establish the stator core flux density (11) which in turn establishes the stator backiron depth. Backiron depth and flux density are important considerations in the design of the stator. Some of these considerations are:

- Backiron Depth: From a magnetic standpoint, the backiron must have sufficient depth to carry flux without magnetically saturating. From a physical standpoint, it must also be

mechanically stiff to facilitate manufacture. These features must consider trade offs with the desire for a shallow backiron, which minimizes the use of magnetic materials in the construction of the stator, and in turn minimizes the generator size, weight and material cost.

- Thermal Management: The stator is subject to several heat generating mechanisms of which the backiron acts as the heat transfer path. These are the ohmic, hysteresis and eddy current losses of the generator. Ohmic loss is due to the electrical resistance of the coils embedded within its slots as previously discussed. Hysteresis (13) loss is due to the magnetic characteristics and density of the magnetic steel laminations from which the stator core is constructed, and frequency of the air gap flux (5). Eddy current (14) loss is due to the stator core steel lamination thickness from which the core is constructed and the square of the frequency and the density of the flux passing through it. Therefore in construction of the stator, it is important to select materials with the appropriate magnetic characteristics to control these losses. It is equally important that the backiron depth be considered to transfer heat as a result of these losses. These considerations are later used to select the appropriate cooling system (i.e.: passive, forced air, water) during the preliminary design phase of the generator.

3.2.2.2 Design Tool Description

GDEB uses a variety of design and analysis tools for the development of all aspects of an electromechanical machine design. These tools include internally developed and commercial software packages that are used throughout the concept, preliminary and detail design phases of an electromagnetic machine development program. The concept design phase of this program limited its tool usage to GDEB internally developed proprietary software (Paragraph 3.2.2.2.1). This was due to the level of detail required for a generator concept design, and the quantity of concept design iterations necessary to support the drivetrain parametric studies. However, the internally developed and commercial design and analysis software packages used up to the preliminary design phase of this program, as well as those available to support a detailed generator design, are described below for completeness.

3.2.2.2.1 Proprietary Software

Conceptual and preliminary electromagnetic designs are created exercising the GDEB proprietary performance code permanent magnet computer aided design (PMCAD). PMCAD is a fast running PC based electromagnetic analysis program. It is a physics-based electromagnetic program that is rooted in legacy code for over forty years from the former General Dynamics Electro Dynamic Division (ED). PMCAD provides a rapid and accurate design and analysis tool which is well suited to perform the iterative conceptual electromagnetic and electrical designs for PM based rotating electric machinery, such as performed during the concept design phase, without the need for electromagnetic finite element analysis. PMCAD has been validated using test data when available, and when not available, it has been validated using electromagnetic finite element analysis (EMFEA).

Thermal analysis is performed using GD proprietary software. This software has the capability to predict the thermal performance and analyze various electromagnetic machine thermal

management configurations including passive, force air, and water jacket topologies. Validation has been done with test data from machines produced by ED and through thermal finite element analysis.

3.2.2.2.2 Commercial Software

GDEB uses a variety of commercial software packages for all aspects of the design and drawing development of electromagnetic machines. These software packages include those containing mechanical and electromagnetic codes. The primary mechanical software programs are AutoCAD and Patran. These are used to develop electromechanical machine structural, thermal and mechanical design packages. The electromagnetic software includes finite element analysis (FEA) programs for the detailed analysis of the electromagnetic portion of the machine design. Vector Fields, Magsoft and Ansys developed these programs.

3.2.2.2.3 Generator Cost Builder

Northern developed a cost builder program to support the wind turbine drivetrain parametric studies. This program provides a ROM cost of a wind turbine generator system to facilitate system capital cost comparisons. The cost builder calculates the costs of individual components of the system using inputs such as material(s) type, weight, dimensions and select manufacturing, fabrication and assembly processes. GDEB used the Northern cost builder, in conjunction with the generator material (stator and rotor laminations, copper and magnet) weight calculations of PMCAD for the various generator concept point designs. This was performed to establish a cost figure of merit, and allow the evaluation and trade off of design parameters to determine the potential for cost improvement for each concept generator point design.

4. PRELIMINARY GENERATOR DESIGN OVERVIEW

4.1 OBJECTIVE

The objective of the preliminary design phase was to develop a low and variable speed permanent magnet (PM) generator. This generator would support the provision of reliable utility power. To do this, the generator would be designed to provide power throughout a range of steady state and transient operating conditions, and under demanding environmental conditions. The PM generator preliminary design would need to consider the mechanical attributes required by the drivetrain interface, the electrical characteristics of its solid state power converter load and overall design integrity to support the objectives defined for a variable speed, direct drive wind turbine generator system.

4.2 PRELIMINARY DESIGN PROCESS

To support the above objectives further definition was required in order for a concept point design to transition to a preliminary design. This definition would identify the performance requirements of the generator so that they can be incorporated in its design, and allow identification of technical issues which require resolution prior to the detail design phase. To do this, a preliminary design process was defined. The elements of the preliminary design process included:

- PM Generator Functional Requirement Definition
- PM Generator Specification Development
- PM Generator Preliminary Design Trade Studies

Each element of this process is described below:

4.2.1 PM Generator Functional Requirements

Basic functional requirements were defined for the concept generator point design. These served as the starting point to investigate the design changes necessary, and to be incorporated into the concept design, for it to function as part of a wind turbine power generator system. It also identified technical issues that required resolution between the generator and the concurrently evolving power converter topology. Initially, the generator was to meet the power schedule. However, as the power system requirements and power converter topology continued to evolve, the generator functional requirements were further expanded. Initial design studies determined the design changes necessary for the concept generator to meet these functional requirements. This began the transition from the conceptual design phase to the preliminary design phase of the generator. Examples of the basic functional requirements from the Northern Preliminary Design Specification Document included:

- Power Rating
- Voltage

- Operating Speed Range
- Maximum Dimensions
- Cogging Torque
- Generator Reactance
- Operating Environment
- Air Cooling
- Design Life

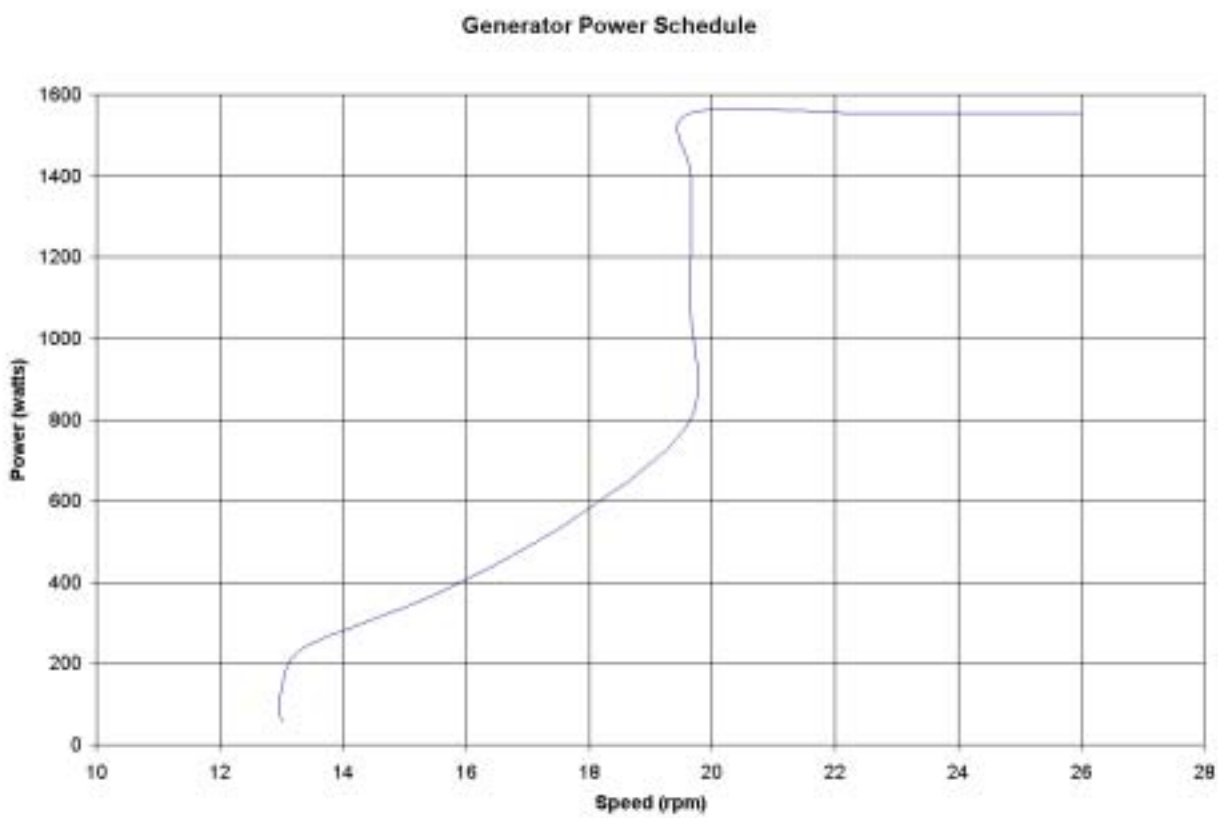

Figure 0-1 Wind Turbine Generator Power Schedule

4.2.2 PM Generator Specification Development

The functional requirements served as the basis for further expansion into the development of a low and variable speed, direct drive PM generator specification. This specification not only included steady state performance requirements, which were only defined in the functional requirements, but transient performance requirements as well. Modeled after commercial generator specifications such as American National Standard Institute (ANSI) C50.10 and National Electrical Manufacturers Association (NEMA) publication MG-1, this specification defined the areas of the PM generator electrical and mechanical design that must be considered in the manufacture of reliable generator hardware for this service. These areas included generator power quality, operating life, overspeed and transient surge capability of its insulation system. Since the generator is indirectly connected to the utility grid through the power converter, only those characteristics necessary to meet the utility grid requirements were incorporated into the generator design. For example, since the generator is not directly connected to the grid, it would not be designed to provide a minimum sustained fault current, as is required by a directly connected commercial generator. Therefore, over conservatism in the PM generator design is avoided, along with the associated size, weight and cost penalties.

4.2.3 PM Generator Preliminary Design Tradeoff Studies

With the electrical and mechanical design parameters established for a generator preliminary design, generator electrical design trade studies were performed to support the continuing power converter topology and control strategy optimization efforts. Generator mechanical design tradeoffs were also performed to investigate the generator to wind turbine mechanical interfaces, generator packaging and options for generator thermal management systems. The purpose of the trade studies was not to optimize individual components, but to investigate the design tradeoffs necessary to support optimizing the overall wind turbine generator system for cost, size, weight and performance. Elements of these trade studies included:

- Investigation of various generator electrical design parameter tradeoffs and their impact on the size, weight, efficiency and cost of the generator. Generator design parameter tradeoffs included voltage, direct and quadrature axis reactance values, and changes to the generator internal power factor (gamma) angle and reactive power capability. These parameter tradeoff studies were in support of establishing a compatible power converter that allowed the highest energy extraction from the generator, with minimum size, weight and efficiency impacts to both components.

- The support of mechanical conceptual designs, which considered PM generator length and diameter changes supporting generator to nacelle mechanical interface tradeoffs and generator/turbine bearing arrangements. This was for the purpose of optimizing the overall wind turbine generator set mechanical package. Generator length and diameter tradeoffs were also performed to address generator to site transportation issues.

- Identifying for resolution, additional open technical issues associated with the wind turbine generator system design and development. Included were thermal design tradeoffs to determine the most effective thermal management system. The systems considered included

passive cooling, forced air and indirect water jacket cooling to determine the most cost effective and mechanically optimizing approach.

4.3 PRELIMINARY GENERATOR DESIGN DESCRIPTION

The following provides a description of the electrical, magnetic, mechanical and thermal design aspects of the preliminary generator design.

4.3.1 Overview

A radial air gap PM synchronous generator was selected for the direct drive, low and variable speed application. This generator provides the advantages of high torque/power density, high efficiency and reduced maintenance when compared to other generator technologies considered for this application (see Section 2). Its high torque/power density results from a design with a high air gap shear stress. For this machine, it is approximately nine (9) pounds per square inch (PSI). To remove the losses within its low volume, the cooling system consists of a spiral water jacket placed between the exterior of the stator core and interior to the generator frame.

4.3.2 General Description

The rotor and stator are the major components of the generator. The rotor is an assembly comprised of a non-magnetic hub, magnets, rotor laminations and non-magnetic wedges. This assembly is mounted on a spider that attaches to the generator shaft. The stator is an assembly of stator laminations, which contains the generator windings and insulation system(s), forming the generator armature. This assembly attaches to the nacelle with support arms. Other components, which are normally part of a generator assembly such as bearings, drive shaft, and end housing, are included in the tower top system assembly and are not discussed in this generator report.

The generator has been designed with a radial air gap and with the permanent magnets located below the surface of the rotor outer diameter. An axial row of permanent magnets is placed on each side of each rotor pole body. This is termed an “embedded” or “spoke” arrangement of the permanent magnets on the rotating assembly. The embedded arrangement of the permanent magnets shown was chosen since it offers advantages over other arrangements such as mounting the magnets on the rotor surface. These advantages include lower magnet surface heating, better magnet mechanical retention and inherent protection of the magnets from demagnetizing effects which may occur during transient or generator short circuit conditions. The preliminary generator dimensions and its initial weight estimate are provided in Table 4-1.

Except for the main flux path, many of the rotor core components are made of non-magnetic materials as discussed above, and shown in Figure 4-2. This is to reduce the permanent magnet leakage flux to achieve a magnetically efficient design, leading to a reduced generator size, weight and material cost as discussed in Paragraph 3.2.2.1.1. Leakage flux is an important consideration in a PM machine design since it tends to be a higher percentage of the total flux source than is present in conventional wound field synchronous machines. Therefore, the field strength of the permanent magnets must be carefully selected to compensate for that which does not cross the air gap to produce useful work.

Table 0-1: Preliminary Generator Design Dimensions and Weight

Preliminary Generator Design Overall Dimensions and Weight			
Height (in)	Width (in)	Length (in)	Weight (lbs.)
157.50	157.50	60	82,000

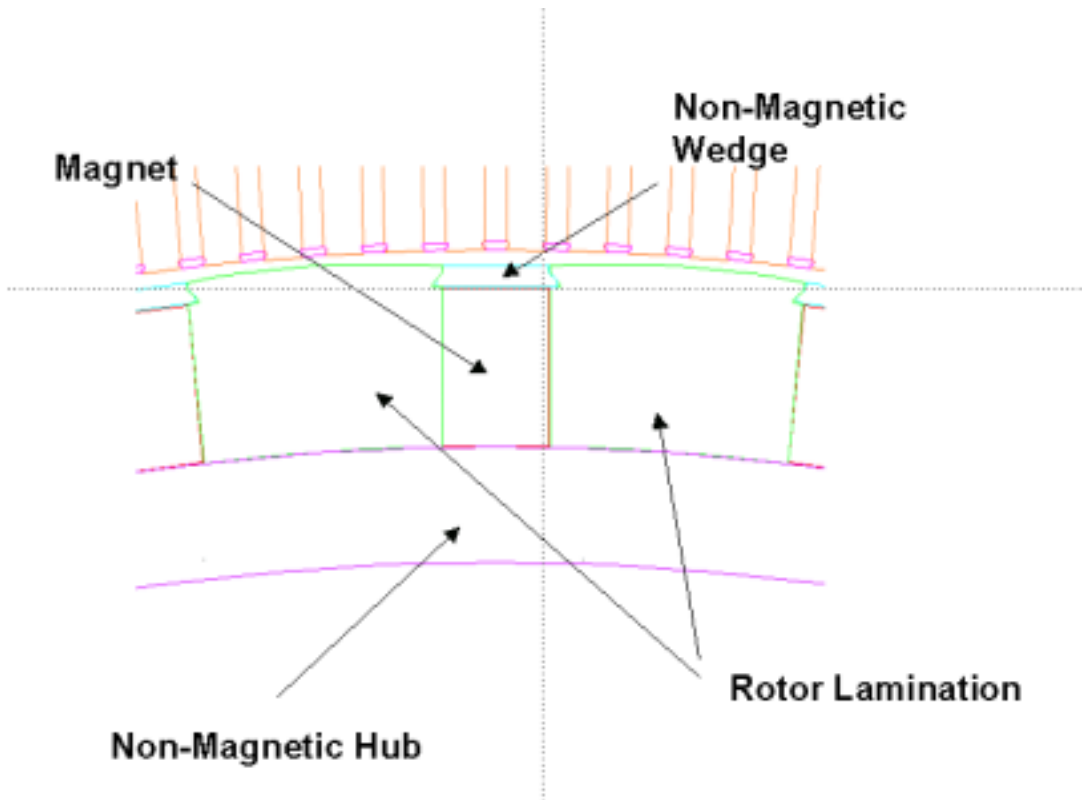

Figure 0-2 Rotor Assembly

4.3.3 Electromagnetic Design and Construction

4.3.3.1 Design Considerations

The generator preliminary design was developed from the design and performance requirements defined by the Northern direct drive PM generator specification that is referenced in Paragraph 4.2.2. It is a non-optimized design. Optimization for size, weight, performance, cost and facility

Table 0-2: Generator Preliminary Design Parameters

Parameter	Value	Units
Power	1.55	Megawatts
Terminal Voltage	724.5	Volts (line-line)
Current	1461	Amperes
Speed	19.65	RPM
Poles	56	
Core Length	28.6	Inches
Air Gap	0.175	Inches
No. Stator Slots	336	
No. Phases	3	
Stator Outside Diameter	148.45	Inches
Stator Inside Diameter	137.25	Inches

of manufacture would be performed during the detail design phase of this program. However, the preliminary design represents sufficient detail to support the discussion of the electrical, magnetic, mechanical and thermal design aspects, which are optimized during the detail design phase of this program. The basic preliminary design parameters are summarized in **Table 0-2** below:

4.3.3.1.1. Stator Assembly

The stator assembly, which consists of the generator frame and wound stator core, is similar in design and construction to that of commercial three phase induction and AC synchronous machines of high power rating. A description of the stator assembly is provided below.

4.3.3.1.1.1 Stator Laminations

The stator lamination material that forms the stator core is non-oriented electrical steel. It was selected by considering the hysteresis and eddy current (watts / lb) components of core loss, its thermal conductivity, manufacturability and prior usage.

For construction of this generator, the large diameter of the stator core will require the laminations to be segmented. The number of segments (or joints) used per lamination will be selected to avoid introducing dissymmetries in the magnetic circuit of the generator, thus

mitigating concerns with induced shaft voltages and current flow through the generator bearings or electric discharge current within the bearings. The former resulting in bearing heating and the latter leading to erosion of bearing material and early mechanical failure.

4.3.3.1.1.2 Slot and Pole Selection

The number of stator slots and poles has been selected for this three-phase design, to provide a high slot/pole/phase ratio. High ratios always improve electrical performance, however, this must be balanced with the ability to wind or physically manufacture the generator. For the preliminary design, it has been determined that the combination of 336 slots and 56 poles yields the best solution when considering the overall performance, manufacturability and cost of the generator.

4.3.3.1.1.3 Stator Winding Conductors and Insulation

The generator uses form wound ("hard") stator coils of high conductivity copper. These coils require rectangular stator slot geometry for placement of the coils in the stator slots. The slots have a minimum groundwall insulation of 1000 volts. The stator coils are insulated for 1000 volts (line-line) and use an inverter grade, ceramic film dielectric material. This is for reliable service due to the electrical stress imposed by the high frequency, steep fronted voltage switching surges presented by the generator's power converter load. For reliable service based on thermal capability, the stator winding insulation system selected is Class H (180°C temperature rise above ambient). A Class H insulation system has been selected from the results of a Arrhenius statistical analysis showing the adequacy of a Class H insulation system based on the specified generator duty cycle and 20 year life requirements of Paragraph 4.2.2.

4.3.3.1.1.4 Stator Slot Wedges

The use of rectangular slots to accommodate the form wound coils result in relatively large openings in the stator slots. These openings affect the permeance of the generator magnetic circuit, which result with undesirable perturbations of the rotating magnetic field within the generator air gap. The preliminary generator currently employs non-magnetic wedges to secure the coils in the slots. Although mechanically adequate, the non-magnetic wedges provide no flexibility in modifying the permeance of the air gap path. One solution to provide uniformity of the air gap permeance is by using magnetic stator slot wedges. Further analysis of generator performance and cost tradeoffs during the detailed design phase will determine the selection of the appropriate wedge material for this application.

4.3.3.1.1.5 Stator Winding Coil Turns, Number of Circuits and Connections

The generator stator is wound in an internally connected three-phase wye configuration. This has been selected since the generator will be operated in an ungrounded electric distribution system with no solid, or high resistance connection between the generator neutral and ground. Based on generator core length and rotational speed, only a single turn of each stator coil is needed to develop the required generator back electromotive force (EMF), and hence its rated terminal voltage. A single turn coil has the advantage of minimizing the stator winding resistance, which contributes to high generator efficiency.

4.3.3.1.1.6 Stator Slot and Back Iron Considerations

The following were considered in selecting the stator backiron depth and slot dimensions of the generator preliminary design:

- Maintaining acceptable stator tooth flux densities to avoid magnetic saturation and heating effects and provide acceptable electromagnetic performance.
- Maximize the stator core flux density as a means of minimizing the backiron depth, heat transmission path and generator size and weight.
- Minimize the stator core loss for improved efficiency.
- Maximize stator winding copper cross sectional area thus reducing stator ohmic loss (I^2R), and maintain the insulation system within a Class H temperature rise.

4.3.3.1.2 Rotor Core Assembly

As provided in the General Description, Section 4.3.2, the rotor core assembly consists of sheet steel laminations that form a rotor pole head and body with the permanent magnets located on either side of a rotor pole. The permanent magnets are embedded below the surface of the rotor outside diameter. Non-magnetic wedges are positioned on top of each permanent magnet for retention purposes. The rotor core assembly is similar in function to the rotor of a conventional wound field synchronous machine, with the permanent magnets replacing the active wound field coils that are needed to develop generator excitation.

4.3.3.1.2.1 Rotor Lamination Material

The lamination material for the rotor core was primarily chosen based on manufacturing and cost considerations. Since permanent magnets are the source of flux for the rotor poles, there is no inherent rotor copper loss as with a wound field machine. Therefore, thermal conductivity of the lamination material is a lesser concern and not a major factor in its selection. A permanent magnet rotor does have losses that need be addressed in its design. The vast majority of these losses originate at the surface of the rotor pole heads due to the presence of air gap flux harmonics which are primarily due to the air gap permeance variation caused by the stator slot openings which are discussed in Paragraph 4.3.3.1.1.4. Since these losses are relatively low, a thicker rotor core lamination material was selected to reduce the number of laminations needed to create a finished pole stack and thus reduce material cost and rotor manufacture time.

4.3.3.1.2.2 Magnets

Rare earth Neodymium Iron Boron (NdFeB) permanent magnets have been selected for this application. The magnetic characteristics of these permanent magnets include a high energy product, residual induction and coersive force. They also have a high operating temperature and are thermally stable. Table 0-3 summarizes the properties of the permanent magnet material selected for this generator application.

Table 0-3: Permanent Magnet Properties

Parameter	Value & Units
B_r (Residual Induction)	1.28 Tesla (nominal)
H_c (Coercive Force)	985 KA/m (nominal)
$BH_{maximum}$ (Energy Product)	40 MGOe (nominal)
Reversible Temp. Coeff. Of Induction	-.09 % /C (20 to 100 °C)
Reversible Temp. Coeff. Of Coercive Force	-.61 % /C (20 to 100 °C)
Max Operating Temperature	150 °C

4.3.3.1.3 Losses and Efficiency

As previously discussed in Section 3.2.2.1.1, generator losses mainly consist of the frequency dependent core (hysteresis and eddy current) and stator copper losses. Since the wind turbine generator is a low speed, permanent magnet machine, other losses typical with wound field synchronous machines have been discounted. These are the friction and windage losses associated with bearings and rotor aerodynamic friction, and active rotor copper losses. **Table 0-4** provides a breakdown of the permanent magnet generator loss mechanisms and an estimate of its overall electrical efficiency.

Table 0-4 Generator Losses and Efficiency

Rated Output Power	1550	Kilowatts
Core Loss	5.192	Kilowatts
Copper Loss	94.638	Kilowatts
Total Losses	99.83	Kilowatts
Efficiency	93.56	%

4.3.3.1.4 Converter Interface

Considered in the electrical design of the generator is its connected load. This load is a three-stage, insulated-gate bipolar transistor (IGBT) based pulse width modulated (PWM) power converter. The input stage of the power converter (generator load side) functions as an active rectifier for the variable frequency and voltage generator output. The active rectifier is seen as a sinusoidal current load to the generator with a switching frequency of 2.5 kilohertz (kHz). The active rectifier is the energy source for the power converter internally regulated, intermediate stage direct current (DC) bus. This DC bus is the voltage source for the output stage PWM inverter. This inverter provides the voltage and current to meet all steady state and transient interface requirements of the utility grid connection.

The power converter has two modes of operation throughout the generator power schedule:

- Maximum Torque per Ampere (MTA): This mode of operation controls the internal power factor angle (gamma angle) of the generator within the low operational speeds and range of its power schedule. In doing so, the power converter extracts the maximum amount of energy available from the generator. In this mode of operation, it also maintains a constant intermediate stage DC bus voltage with a lower and variable generator output voltage. This is performed by controlling the duty cycle of the input stage IGBT switches, which regulate and transfer the magnetic energy of the generator windings to the DC link.

- Terminal Voltage Control: This mode of operation provides a relatively constant terminal voltage by adding to and weakening the field of the generator. This is performed by modifying the generator power factor, controlling its reactive current flow, and in turn controlling generator flux, and terminal voltage.

With both modes of operation, the nature of a switch mode power converter requires consideration with the design, material selection and accessories of the generator. Some of these considerations are:

- High Frequency Voltage Surge: Switching of the power converter IGBT's result in steep fronted voltage transients with sub-microsecond rise times. This results in a non-uniform voltage distribution across the coils of the generator windings and the turns of the coils. Thus these transients subject the turn insulation, especially near the terminal end, to high electrical stress which can result in insulation failure. This concern is addressed with the selection of inverter grade magnet wire for the generator windings (Paragraph 4.3.3.1.1.3).

- Voltage Reflection Phenomena: Long cable lengths will be used between the generator and power converter at the site installation. The surge impedance of the cable, switching frequency of the converter and impedance of the generator must be considered to avoid reflected waves at the terminals of the generator. The magnitude of the reflected wave is dependent on the extent of impedance mismatch, with a maximum equal to the converter pulse voltage. The converter pulse and reflected voltage waves add, so that up to twice system voltage may exist on the generator terminals, increasing the dielectric stress on its insulation system. One method to address this issue is to employ impedance matching terminations at the generator output. The other is to increase the dielectric strength of the

generator insulation system that will incur increased cost size and weight. Since the generator preliminary design does not consider this phenomena in its design, the detail design phase of the generator will need to be closely coordinated with the overall wind turbine system development to ensure the lowest overall system cost, size and weight impact.

4.3.4 Mechanical Design

The mechanical design of the generator addresses the stator and rotor components. The two main sub-components of the stator assembly are the stator core and the water jacket. The main sub-components of the rotor are the permanent magnets, the lamination stack on which the permanent magnets are mounted, and the non-magnetic hub on which the lamination stack is mounted. Other components of the mechanical design include the closure shrouds and external support ring. The closure shrouds are located at either end of the generator to reduce its exposure to the environment. The stator core assembly is mounted on the external support ring that provides structural support for the entire stator assembly. These major components of the generator mechanical design are shown in **Figure 0-3** and are further described in the following sections of the report.

4.3.4.1 Rotor Mechanical Design and Assembly

The rotor assembly consists of the laminated poles, which are mounted on a non-magnetic hub and permanent magnets that are mounted on the lamination stack and retained by rotor wedges. The laminated poles are assembled and fastened to the non-magnetic hub on the inside diameter of the rotor. The rotor assembly is constructed such that the permanent magnets are mechanically protected on each of its sides. The top of the magnet, or side closest to the stator inside diameter is protected using a non-magnetic rotor wedge. For this design, the rotor wedge is fabricated from aluminum. Closure plates that are fastened to the rotor hub, as seen from either end of the rotor axis, protect each face of the magnet. The bottom of the magnet is protected by the non-magnetic rotor ring. This results in forming a rectangular pocket that houses the magnet, reduces the cost of magnet material and simplifies the rotor assembly process.

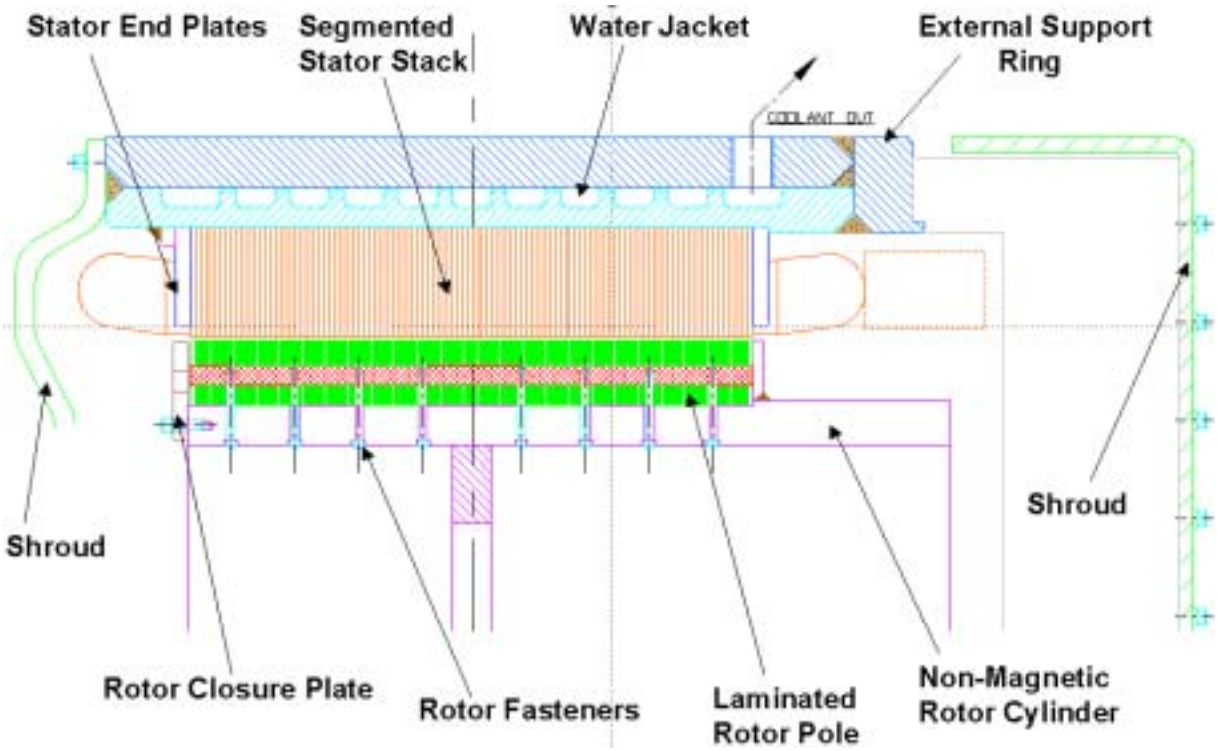

Figure 0-3 Generator Layout

4.3.4.2 Stator Mechanical Design and Assembly

4.3.4.2.1 Stator Core

The design of the stator includes mechanical features typically found in induction and wound field synchronous machine designs of high power rating. Some of these mechanical features include segmented laminations, end plates or finger blocks, and stiffening bars which are welded to the outer diameter of the stator core assembly.

Due to the large outside diameter of the generator, the core stack is made of segmented laminations. For the preliminary design, the number of segments chosen is 8 with each spanning 45 degrees of the stator circumference. The number of segments was chosen to reduce stator core circulating currents.

The axial ends of the stator core stack are reinforced with end plates or finger blocks. These provide mechanical support for the laminated stator teeth to prevent axial flaring of the teeth as the core stack is compressed and welded during the manufacturing process. Also providing mechanical support during the manufacture and assembly process are stiffening bars that are incorporated around the outside diameter of the stator core assembly.

4.3.4.2.2 Water Jacket

Various cooling methods were considered and analyzed during the preliminary design of the generator. For this design, a water jacket was selected as the most efficient cooling method which requires the lowest cooling flow when compared to the other thermal management

systems considered (see Section 4.3.4.3). The water jacket surrounds the outside of the stator core and is a single pass, spiral type. The water jacket consists of two cylinders. The internal cylinder has a machined spiral groove pattern and the external cylinder surrounds and encloses this groove. Material options of the cylinders of the water jacket include either stainless steel or aluminum. Aluminum is the preferred material because of its higher thermal conductivity and lower cost. Final material selection will be made during the detail design phase of this program.

4.3.4.3 Thermal Design

The approach to thermally analyze the preliminary generator design supporting the selection of its thermal management system is provided as follows.

4.3.4.3.1 Thermal Design Considerations

The process of converting mechanical to electrical energy in the generator results in energy lost in the form of heat. This heat is the result of the electrical and mechanical losses in the generator. A thermal management system is required to remove this heat and to stabilize and limit the operating temperatures of various parts of the generator. These limits are to remain below the thermal capabilities of the generator insulation system(s) as well as various mechanical components. This is most effectively done when the cooling system locates the appropriate cooling medium in closest proximity to the source generating the heat through its losses.

4.3.4.3.2 Thermal Analysis

A preliminary thermal analysis was conducted for the preliminary generator design with an assumed rating of 1550 kW and with the break down of losses and overall efficiency as defined on Table 4-3. The preliminary thermal analysis used a thermal lumped parameter circuit model. In this model, the generator is represented by a series of layers, each having different geometric thermal properties. These are important considerations as they influence the temperature distribution within the generator. The assumptions used in this thermal analysis are as follows:

- An ambient temperature of 40 ^{0}C
- The heat generated from the stator coils flows primarily in a radial direction and directly into the water jacket.
- Core losses generated in the stator teeth and back iron also flow into the water jacket.
- Losses associated with the permanent magnet rotor are considered negligible when compared to the losses of the stator core, and have been neglected.
- The highest loss is generated in the stator winding copper.
- The total losses used in the thermal analysis were 99.83 kW at rated load.

Table 0-5 Thermal Analysis Results

Q-Loss	End-Turns	T-Cool In	ΔT-Cool	Cool-Flow
[kw]	[Deg. C]	[Deg. C]	[Deg. C]	[GPM]
99.83	133.7	40	10	35.88

The thermal modeling and analysis are summarized in Table 0-5. This preliminary analysis indicate that the generator will provide rated load within acceptable total temperatures for various parts of the stator and within the Class H temperature rise limits of the generators insulation system(s). The stator winding end turns were predicted to have the highest absolute (ambient temperature plus temperature rise) operating temperature (135 ^{o}C). Also shown in Table 0-5 is the required flow for the water jacket to maintain these temperatures of the generator.

4.3.4.4. Weight Analysis

A preliminary weight analysis of the generator was conducted for:

- Provide Generator Cost Builder input data to support Northern's material and COE calculations.
- Perform preliminary structural analyses of the generator.

The generator mass is overhung and mechanically supported on only one end of the machine. Therefore, an accurate assessment of the weight was used to evaluate the requirements for its support structure and provide the initial values from which stator and rotor core deflections could be determined. For this purpose, the generator weight is provided in three separate tables. The support structures described in do not include the bearing or drive spindle. The overall estimated rotor weight and individual components of the rotor assembly are provided in Table 0-7. The overall estimated stator weight and individual components of the stator assembly are provided in Table 0-8. The preliminary estimated total generator weight, including ancillary components listed in these tables is 82,000 lbs.

Table 0-6 Generator Support Structural Weights

COMPONENT DESC.	MATERIAL	WGT [Lb]
Support Structures etc.		
Generator support struts	Steel	6,966
Front End Shroud	Composite	1,028
Connection end shroud	Composite	994
	Total	**8,988**

Table 0-7 Generator Rotor Weights

COMPONENT DESC.	MATERIAL	WGT [Lb]
ROTOR		
Rotor spider	Steel	5,414
Rotor hub	Stainless steel	10,445
Rotor poles	El. Steel	7,994
Rotor magnets	Magnet	2,946
Rotor wedges	Al	140
Rotor end plates	Stainless steel	538
	Total rotor	**27,477**

Table 0-8 Generator Stator Weight

COMPONENT DESC.	MATERIAL	WGT [Lb]
STATOR		
Outer support frame	Steel	15,492
Stator cooling jacket	Stainless steel	7,183
Stator laminations	El. Steel	15,878
Stator windings	Cu + ins.	6,324
Stator core end plates	Stainless steel	566
Stator slot wedges	NEMA	38
Stator locking ring	Stainless steel	101
	Total stator	**45,582**

5. MANUFACTURE

5.1 MANUFACTURE PROCESS

The physical size and weight of the generator in conjunction with its configuration requires machinery and equipment that is able to support the various machining and assembly techniques necessary to produce the finished product. The need for large machining centers and the ability to handle large weights often leads to the distribution of work over several different facilities possessing unique manufacturing methods tailored to the needs of this program. The need for specialized work in conjunction with an aggressive schedule opens the possibility for the prototype to have the rotor and stator assemblies manufactured in different locations and shipped to a third facility in order to perform final assembly of all parts, including installation of the magnetic material. Once completed, the entire generator assembly consisting of the rotor, stator, structural support (including spindle and arms), bearing, and all shrouds would be shipped to the NREL Facility for performance testing. The conditions present in typical PM units resulting from the use of large quantities of magnetic material in the rotor assembly further emphasizes the need for special tooling and processes to assure that safety and critical alignments are satisfied. Additionally, some of the advantages obtained during the design process through the use of water cooling on the generator's exterior surface will impose special machining of the cooling jacket and stator core stack to assure that thermal equilibrium is achieved. The use of commercialized material and standard design tolerances were used as a foundation to design the generator in order to minimize overall production costs.

5.1.1 Rotor

The rotor consists of several different parts including a non-magnetic hub used to position and assemble the electromagnetic components on its outer periphery. Other parts include laminated pole stacks, magnets, non-magnetic wedges, and closure plates.

5.1.1.1 Hub

The embedded radial PM design requires that a non-magnetic hub be used in order to generate the proper flux path during normal operation. The material historically used for this component is stainless steel type 304 or 316. This material is selected because of good machining characteristics and mechanical properties and fairly reasonable costs. Alternate materials such as high-strength aluminum (6061-T4 or greater) are also considered, but require analysis to assure that its mechanical properties along with the configuration selected are acceptable during normal operation. This consideration requires mechanical FEA models of the rotor assembly to be generated and analyzed to verify acceptance prior to use. The reduction of weight and cost makes the use of aluminum very attractive but limits its interface with other materials when it comes to permanent attachment such as welding. Since only the outside cylinder is required to be non-magnetic, the use of stainless steel allows the remaining hub components to be made out of standard steel and welded using bi-metallic weld procedures. This somewhat curtails the material costs but increases the labor due to some of the complexities introduced by welding dissimilar metals. On the flip side, the use of Aluminum also introduces another disadvantage, which is the need to use threaded inserts on all mechanical connections where fasteners are used. Overall, the selection of the material for the rotor hub is critical since it offers several advantages and

disadvantages for both Stainless Steel and Aluminum. A detailed analysis of the design and considerations to manufacturing practices will be reviewed prior to making a final decision.

5.1.1.2 Magnets

Another feature introduced in this design to help minimize costs is the relaxation of the design tolerances on all components and the elimination of machined flats on the hub outer surface which is used to position the magnets and rotor poles. The elimination of the flats allows the machining of this piece to be done without any special milling setups. This has significant reductions in cost and schedule and allows standard machining practices to be used in order to produce the part. The focus on relaxing the component tolerances was aimed at the magnetic material. Historically, the designs produced in the past required machining and magnetic tolerances to be much tighter than the industry practices used by the suppliers. Typical industry practice provides magnet mechanical tolerances of +/- .005 inches on all dimensions and +/- 3% variation on magnetic strength. Most of the design produced in the past required +/- .002 inches on dimensioning and +/- 1% magnetic variation. This condition resulted in increased costs of the magnetic material, and in many cases two to three times the normal cost. During the initial design phase of this program, changes where made to the surrounding components, including the laminated poles, wedges, and hub, to allow the use of magnetic material having standard industry practices. This was a significant improvement on the design that also yielded substantial cost reductions.

5.1.1.3 Poles

The issue of producing stamped laminations for the rotor poles is one that needs further investigation to help reduce both cost and schedule. Initial investment in a stamping die will be necessary and its cost will be highly dependent on the number of pieces that will be produced throughout its life. If the approach taken will be to make large quantities of generators, the die's initial cost may be significant and time consuming. To avoid delays and cost overruns on the prototype, an option would be to make a less expensive die with shorter life that may also be used during the initial stages of production. Doing this coincided with the notion that somewhere along the line a permanent and more costly investment will be made. A second option often used for the prototype is to have the pole laminations laser cut. This will incur additional cost and is typically selected when aggressive schedules are imposed. Regardless of the approach selected for both the prototype and follow on production units, the ability to assemble the magnetic material on the rotor hub is highly dependent on the consistent production and quality of the rotor laminations and assembled pole stacks. As such, selecting both the process and supplier for these components is critical in order to prevent downstream complications.

5.1.1.4 Wedges

Production of the aluminum wedges used to position the magnet radially on the rotor hub can be made in one of two ways. The first and most expensive is to machine them out of bar stock. During production, the quantities will become much larger and will probably justify the initial investment to create a die to extrude the shape and eliminate the repeated labor used machine them. The approach is to typically machine them for the prototype and create special tooling to automate the process during production.

5.1.1.5 Special Tooling

Unlike the rotor construction used in standard induction or wound field synchronous machines, this one requires special tooling in order to insert the magnets with their proper orientation in the desired locations. The tooling used simulates some type of carrier configuration that will prevent movement during insertion into the rotor. All the tooling will be made out of non-magnetic material and must provide the flexibility to both insert and remove the magnets as the need arises.

The manufacturing process of the rotor assembly can be generalized as follows:

- Fabricate and machine the rotor hub.
- Stamp rotor laminations. Assemble and weld pole stacks.
- Fabricate aluminum wedges.
- Assemble pole stacks on rotor hub. Use dummy blocks to radially position stacks equally throughout circumference.
- Install magnetic material between rotor poles, wedges, and closure plates.

5.1.2 Stator

The generator stator assembly consists of several components including segmented laminations, an external water jacket, outer support cylinder, coils, and end plates. The design selected is one which uses a spiral cavity on the outer periphery of the stacked laminations to flow water through in order to remove the heat generated internally by the coils during operation. The method of cooling used for this unit is predicated on the assumption that better than 95% contact will be present between the stator core stack and the water jacket. This adds complexity to the manufacturing process by requiring that both the internal and external surfaces of the applicable parts be machined to create an interference fit. A review of the pro's and con's associated with this type of design clearly indicates that the benefits gained by the reduction in size and weight of the overall generator during design far outweigh the complexities introduced during the manufacturing process. Another feature of this design causing added complexities is the skew on the stator core stack. This feature eliminates the ability to stack the laminations directly into the water jacket cylinder and requires special procedures to enable machining of the outer surface.

5.1.2.1 Laminations

The lamination material used for this stack is standard electrical sheet steel with a thickness of .025 inches. The electromagnetic size of the generator requires that a segmented type of stator construction be used. To accomplish this, eight segments are selected and overlapped 30 degrees during the stacking process. The laminations may either be laser cut or stamped using a newly designed die. The method chosen will depend on cost and time constraints. Typically, laminations are laser cut for prototype units and a die is made to support the production process.

5.1.2.2 Stator Core Stack

Manufacturing of the core stack requires special tooling in order to create and closely maintain the skew required throughout its length. The stack is built vertically using a tool to identify the stator inside diameter. Each set of eight laminations creating one cylinder is rotated from the previous one by 30 degrees. The pattern is repeated until the desired stacked length is produced. Once the height is achieved, the stack is compressed axially and welded on the outer surface using steel bars that are placed on the recessed lamination cutouts. The entire assembly is then ground on the outside surface in preparation for installation to the water jacket. The entire process including the external machining is done with the fixture in place.

5.1.2.3 Water Jacket

The water jacket consists of two cylinders assembled together using welding and an interference fit. The internal cylinder is machined to create a spiral groove on its outer surface for the water path. The external cylinder is the pressed over the internal cylinder to seal the fluid path. After assembly the inside surface is machined in preparation for insertion of the core stack. The assembly is then checked for leaks and heated in order to insert the pre-fabricated core stack.

5.1.2.4 Wound Stator

Once the stator stack is inserted into the water jacket, the skew is checked in preparation for coil insertion. The coils, previously made, are now inserted in the stator slots along with several fillers and liners to provide insulation for the selected voltage. Once this process is completed, the internal connections are made. This is followed by some type of epoxy impregnation process used for additional protection of the windings. Alternate methods may be used to achieve similar results which includes impregnation of the individual coils prior to insertion on the stator slots. Once completed, the assembly goes through several electrical tests to comply with standard commercial generator practice.

Appendix B: WindPACT Turbine Specification

B						
A		Original	31 July 2001	GLB	GLB	JAL
Rev.	Pages Affected	Description	Date	Prepared By	Approved By	Project Approval

Northern Power Systems
Waitsfield, VT 05673
(802) 496-2955

Table of Contents

1 Introduction **3**
2 Scope **3**
3 Turbine specifications **3**
3.1 Turbine architecture 3
3.2 Drivetrain specifications 4
3.3 Turbine safety and operation 4
3.4 Power curves 5
3.5 Drivetrain 6
3.6 Structural and mechanical design 6
3.7 Electrical design 7
3.8 Physical environment 7
3.9 Maintenance 8
References and Standards **8**

1 Introduction

The following turbine specification was written under subcontract #YCX-1-30209-02, Advanced Wind Turbine Drive Train Designs, of the WindPACT study. The study seeks to advance the state of the art in wind turbine technology by exploring innovative concepts in rotor design, drivetrain designs, logistics, and an increased understanding of peripheral costs. Under the study, several megawatt-scale drivetrain architectures will be investigated, the most promising will be selected, and a preliminary design will be completed. The specification covers turbines of 1.5-MW and 3.0-MW ratings.

The turbine and drivetrain components will be designed in accordance with the wind turbine design standard IEC 61400-1[1] and the Germanishcer Lloyd Rules [2].

2 Scope

This document provides the turbine architecture and general specifications for the range of turbines covered in the WindPACT study with the general specifications shown in Table 1.

3 Turbine Specifications

The sections that follow describe the architecture and general specifications for baseline turbines at 1.5 and 3 MW.

3.1 Turbine Architecture

The turbine has a three-blade, independently pitch-controlled upwind rotor with a rigid hub. The coning angle is 0 degrees (although the rotor may be “predeflected” upwind), and the angle of the low-speed shaft is 5 degrees with respect to horizontal. The rotor/drivetrain operates at variable speed.

The drivetrain comprises the rotating equipment and bearings from the hub flange to the generator, the associated electronics and controls, the structural element that supports the rotating equipment and transmits loads to the tower, and the power converter.

A tubular steel tower is assumed for loads and foundation calculations. The only specific tower requirement is to maintain a similar height and natural frequency.

The turbine controller oversees all turbine operation and all safety and state transitions, except to maintenance mode. It allows remote monitoring and supervisory control of the wind turbine, as well as fault/alarm data storage. The turbine controller is described in more detail below.

3.2 Drivetrain Specifications

Table 1 shows typical specifications for the 1.5- and 3-MW turbine designs.

Table 1. Turbine Drivetrain Specifications—IEC WTGS Class II

Electrical power rating[a]	1.5 MW	3 MW
Low-speed shaft speed		
Minimum (n1)	12.0 rpm	8.5 rpm
Rated (nr)	19.7 rpm	15.3 rpm
Maximum operating (n2)	22.2 rpm	17.0 rpm
Overspeed shutdown (1.1*n2)	24.4 rpm	16.8 rpm
Maximum design (1.25 * n2)	27.8 rpm	19.1 rpm
Low-speed shaft power		
Mechanical rating (Pr)	1.603 MW	3.206 MW
Maximum operating (Pt=1.0*Pr)	1.603 MW	3.206 MW
Maximum instantaneous (Pmax=1.1*Pr)	1.763 MW	3.527 MW
Reference		
Cut-in wind speed	3 mps	3 mps
Rated wind speed	12 mps	12 mps
Cut-out wind speed	25 mps	25 mps
Rotor diameter	70.5 m	94.8 m
Hub height	84.0 m	112.0 m
Design life	20 yr	20 yr

Values for the baseline configurations are derived from turbine simulations and Germanischer Lloyd recommendations.
[a]Rated electrical power values assume 94% drivetrain efficiency at converter output.

3.3 Turbine Safety and Operation

Turbine Safety

Three independently pitching blades compose the turbine safety system. Normal and emergency shutdowns are achieved by pitching the three blades simultaneously. Redundant safety is inherent in this design because the turbine can be brought to a safe condition despite the failure of one pitch drive. In either case, the rotor can be brought to rest by applying the shaft disk brake after the rotor is slowed by the pitching action of the blades.

Turbine Operation

The controller supervises all turbine operations. Only the transition to the maintenance state is initiated through human-machine interface. Following are the turbine's operating states:

- *Idling.* The blades are pitched to the feathered position, and the rotor can turn freely. The turbine is "waiting for wind."
- *Startup.* The blades are pitched to the startup position when the wind speed approaches cut-in wind speed.
- *Generating.* The turbine is producing power. The output power injected into the grid is controlled as a function of rotor speed. The power command is clamped at the machine rating, and blade pitch is adjusted to limit the rotor speed at rated output.
- *Normal shutdown.* The blades are pitched slowly to feather.
- *Emergency shutdown.* The blades are pitched quickly to feather.
- *Parked*. The blades are pitched to feather, and the parking brake is applied.
- *Maintenance*. The blades are pitched to feather, the parking brake is applied, and the turbine is locked out.

3.4 Power Curves

Figure 1 shows the power curve for the 1.5-MW baseline turbine, and Figure 2 shows the power curve for the 3-MW turbine. There will be slight variations in the power curve for different drivetrain configurations as a result of variations in drive efficiency.

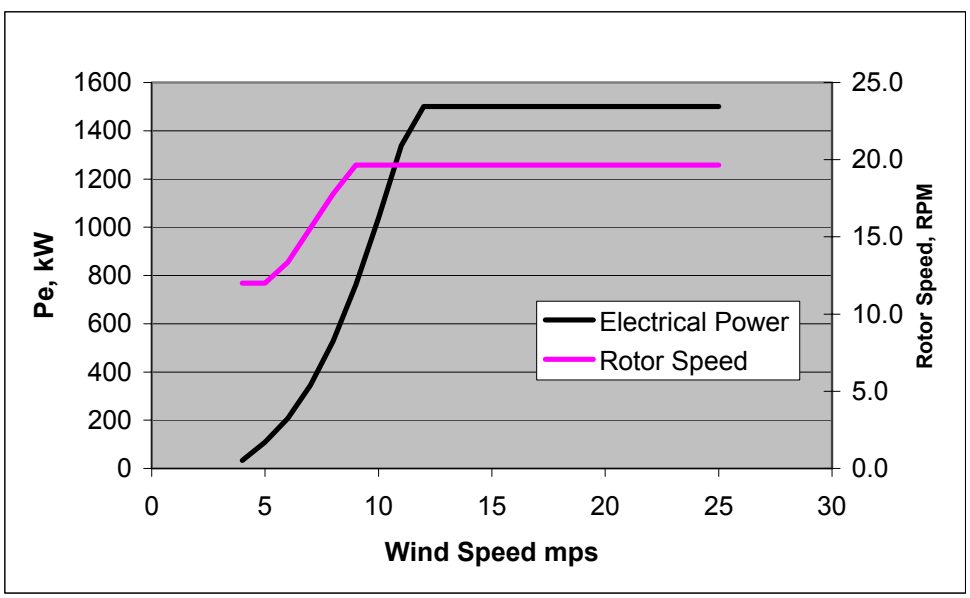

Figure 1. 1.5-MW baseline power curve

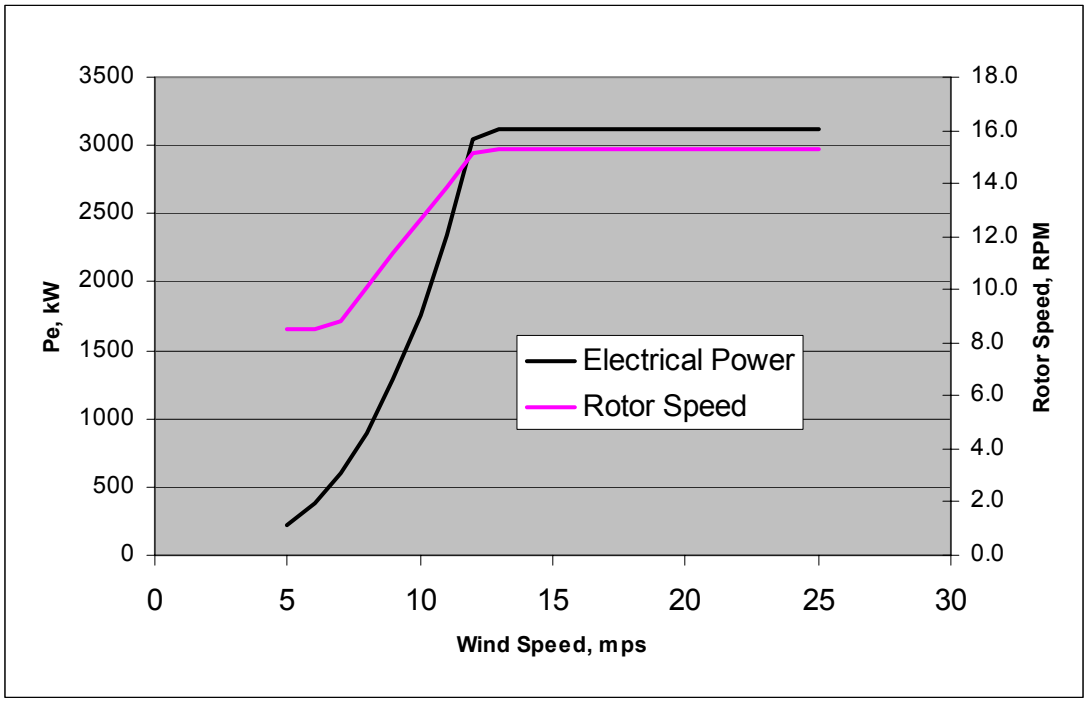

Figure 2. 3.0-MW baseline power curve

3.5 Drivetrain

The drivetrain design includes the following:

- Parking brake at the rotor shaft
- Rotor lock on the low-speed side
- "Mechanical fuse" in the drive line
- Slip ring
- Speed sensor to trigger a shutdown independent of the main controller
- Emergency stop buttons within reach of each service location
- Lift points
- Lanyard attachment points.

3.6 Structural and Mechanical Design

As required by IEC 61400-1, structural design conforms to *General Principles on Reliability for Structures* (ISO 2394:1998). Gear design conforms to *Recommended Practices for Design and Specification of Gearboxes for Wind Turbine Generator Systems* (AGMA/AWEA-921-A97) and *Fundamental Rating Factors and Calculation Methods for Involute Spur and Helical Gear Teeth* (ANSI/AGMA 2001-C95). The drivetrain loads in Appendix D were used as a basis for analysis.

3.7 Electrical design

Power Circuit

Electrical output from the power converter conforms to *IEEE Recommended Practices and Requirements for Harmonic Control in Electrical Power Systems* (IEEE Std 519-1992). Voltage tolerances adhere to *Electrical Power Systems and Equipment—Voltage Ratings (60Hz)* (ANSI C84.1-1995). Power converter efficiency measured between the DC input and AC output terminals is at least 95% when operating at nominal input and output voltages from 50% to 100% of rated output power. The power converter minimizes electromagnetic interference (EMI), which could cause instrumentation, communication, and other electronic equipment to operate poorly. Table 2 shows attributes of the power converter.

Protection and Safety

The wind turbine incorporates anti-islanding standards, both meeting UL1741 Sec. 46.3 requirements and protecting from:

- Over and under voltage
- Over and under frequency
- Over current
- Voltage surge
- Ground fault
- Loss of phase
- Phase reversal.

Table 2. Power Converter Attributes

Attribute	Description
Output surge power	120% of rated power for 30 seconds
Frequency	50/60 Hz; programmable
Switching frequency	Minimum 5 kHz
Displacement power factor	>0.95 from 20% to 100% of rated power
Ambient temperature	Operating: from –20°C to 50°C
	Storage: from –40°C to 85°C

Abbreviations: C = centigrade; Hz = Hertz; kHz = kilohertz

3.8 Physical environment

Table 3 describes the turbine's physical environment. The turbine design is adaptable to coastal/offshore siting, and all turbine components are protected from damage resulting from lightning strikes.

Table 3. Physical Environment of Turbine

Attribute	Description
Operating temperature	From –20°C to 50°C
Minimum temperature	–40°C
Humidity	From 0% to 100%, condensing
Airborne contaminants	Dust and pollution
Altitude	To 1000 m without derating

Abbreviations: C = centigrade; m = meter

3.9 Maintenance

The turbine tower provides a safety climb system. Attachment points are furnished in the tower top and nacelle for maintenance personnel. The maintenance interval is 6 months.

References and Standards

[1] IEC 61400-1. *Wind Turbine Generator Systems, Part 1: Safety Requirements.* 2nd edition. 1999.

[2] Germanischer Lloyd. *Non-Marine Technology, Part 1: Regulations for the Certification of Wind Energy Conversion Systems*. Rules and Regulations, IV. 1999.

[3] ISO 2394:1998. *General Principles on Reliability for Structures.*

[4] AGMA/AWEA-921-A97. *Recommended Practices for Design and Specification of Gearboxes for Wind Turbine Generator Systems.*

[5] ANSI/AGMA 2001-C95. *Fundamental Rating Factors and Calculation Methods for Involute Spur and Helical Gear Teeth*.

[6] IEEE Std 519-1992. *IEEE Recommended Practices and Requirements for Harmonic Control in Electrical Power Systems*.

[7] ANSI C84.1-1995. *Electrical Power Systems and Equipment—Voltage Ratings (60Hz*)

Appendix C: NW1500 Loads Specification

B						
A		Original	08 Nov 2002	GLB/JWS		
Rev.	Pages Affected	Description	Date	Prepared By	Approved By	Project Approval

Northern Power Systems
Waitsfield, VT 05673
(802) 496-2955

Table of Contents

1 Introduction 3
2 References and Standards 3
3 Turbine Description 3
3.1 Specifications 3
3.2 Coordinate Systems 4
4 Design Loads 5
4.1 Extreme Loads 5
4.2 Cyclic Fatigue Loads 6
4.3 Bearing Fatigue Loads 7
4.4 Torque Duration Curves 10
Attachment I 12

Figures

Figure 1. Hub coordinate system 4

Tables

Table 1. Turbine specifications 3
Table 2. Extreme loads 5
Table 3. Damage-equivalent fatigue loads 6
Table 4. Bearing fatigue loads 7
Table 5. Torque duration curve—70-meter rotor 10
Table 6. Torque duration curve—77-meter rotor 11

1 Introduction

This document outlines the drivetrain loads for the 1.5-MW turbine with specifications given in Table 1. The loads were calculated in accordance with the wind turbine design standard IEC 61400-1[1].

The document covers extreme loads, cyclic fatigue loads, bearing loads, and gearbox loads. Coordinate systems are given in Figure 1. The loads are derived from the loads document [2].

2 References and Standards

[1] IEC 61400-1. *Wind Turbine Generator Systems, Part 1: Safety Requirements.* 2nd edition. 1999.

[2] Nw1500LoadsDoc_A.doc

[3] Germanischer Lloyd. *Non-Marine Technology, Part 1: Regulations for the Certification of Wind Energy Conversion Systems*. Rules and Regulations, IV. 1999.

3 Turbine Description

3.1 Specifications

The specifications in Table 1 are included for reference purposes.

Table 1. Turbine Specifications

Parameter	Value		Units
Diameter	70	77	m
Power Rating	1500	1500	kW
Max Power	1650	1650	kW
Rated Speed	19.7	17.0	RPM
Operating Speed Range ($n_1 – n_2$)	9-22	8-19	RPM
Maximum Operating (Initiate shutdown,n_A)	25.6	22.2	RPM
Maximum Overspeed (Abs Limit, n_{max})	29.1	25.3	RPM
Hub Height	84	84	m
Cut in Wind Speed	3	3	mps
Rated Wind Speed	12	11	mps
Cut Out Wind Speed	25	20	mps
Design Class	IIa	IIIa	-

Design Life	20	20	years

3.2 Coordinate Systems

The coordinate system corresponds to that used in [2]. The coordinate system is located at the rotor center and does not rotate with the rotor. All loads are given with respect to this coordinate system except the damage equivalent loads MyS and MzS, which are calculated in the non-rotating frame.

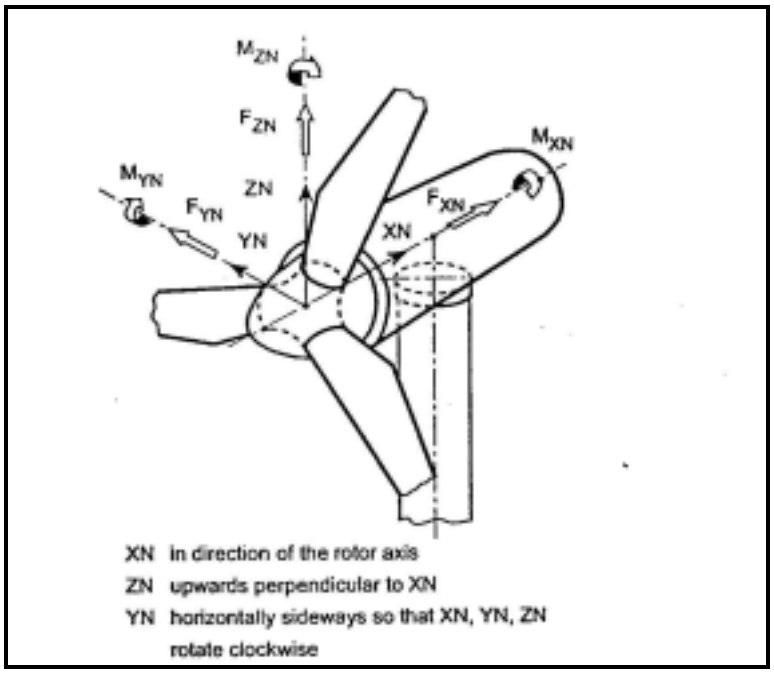

Figure 1. Hub coordinate system

4 Design Loads

4.1 Extreme Loads

Fixed frame hub center loads

Units are kN and kNm

File: DD_Extreme.eev.xls

Table 2. Extreme Loads

Parameter	Type	FxS	FySFixed	FzSFixed	MxS	MyS-fix	MzS-fix	MyzCbnFix
		kN	kN	kN	kNm	kNm	kNm	kNm
FxThrustS	Min	**-11.8**	197.9	-344.6	1029.9	742.4	485.3	887.0
FxThrustS	Max	**379.2**	-292.6	254.8	1072.7	317.4	-265.1	413.6
FySFixed	Min	115.7	**-431.1**	-15.4	1073.0	182.0	-567.2	595.7
FySFixed	Max	109.9	**436.5**	-32.4	1023.6	258.5	1040.7	1072.3
FzSFixed	Min	105.4	-1.6	**-432.6**	1046.3	72.6	973.9	976.6
FzSFixed	Max	207.0	9.2	**429.9**	1069.1	-949.7	-474.6	1061.7
MxTorqS	Min	60.3	-155.7	356.7	**199.3**	107.5	39.0	114.3
MxTorqS	Max	219.5	185.6	-287.8	**1092.4**	1009.5	-560.0	1154.4
MyS-fix	Min	28.4	-173.3	312.9	1073.8	**-2428.8**	240.8	2440.7
MyS-fix	Max	97.3	318.0	-92.4	1066.8	**2315.7**	188.2	2323.3
MzS-fix	Min	96.8	-70.0	-333.0	1064.7	240.1	**-2262.6**	2275.3
MzS-fix	Max	98.8	41.7	336.4	1066.6	-514.9	**2349.9**	2405.7
MyzCbnFix	Min	170.9	390.5	42.7	992.0	-0.1	-0.1	**0.2**
MyzCbnFix	Max	28.4	-173.3	312.9	1073.8	-2428.8	240.8	**2440.7**

4.2 Cyclic Fatigue Loads

Rotating frame hub center loads

Units are kNm

Neq = 2E06 cycles

File: NW1500_70_DELComputations_RevB.xls

Raw Rainflow counts are given in Attachment 1.

For the given number of cycles Neq and material exponent m, with the distribution of range loads described by the vector [ni ,Ri], where ni is the number of cycles of load Ri

$$Req = [\ (\Sigma n_i\ R_i^{m)}\ /Neq\ ]^{(1/m)}$$

Part life is given by:

$$L = [a(uReq)^{-m}]/Neq$$

Where u is the unit stress function (stress/load) for the section/detail in question.

Damage at design life is given by:

$$D = L_D * 1/L$$

Table 3. Damage-equivalent Fatigue Loads

Damage Equivalent Loads (Req)				
For m = >>>	**3**	**5**	**8.8**	**12.5**
MxTorqS[X] (kNm)	516	488	518	543
MyS[X] (kNm)	3200	2147	1937	2020
MzS[X] (kNm)	3215	2148	1927	2008
MyPitchN[X] (kNm)	2688	1807	1731	1875
MzYawN[X] (kNm)	2592	1756	1670	1753

4.3 Bearing Fatigue Loads

Table 4 gives the coordinated loads at the given rotor speed, for the number of hours shown.

Both yearly and 20-year lifetime hours are shown.

Load units are kN and kNm.

Abbreviations: abs = Absolute Value; rms = Root Mean Square; RPM = rotations per minute; fixed = fixed frame coordinates

File: MainBearingLoads_ClassI_RevEb.xls

Table 4. Bearing Fatigue Loads

Load Case	FxThrust (kN)	My (kNm)	abs(Mz) (kNm)	abs(Fy) (kN)	Fz,fixed (kN)	rms RPM	Hours/year	Hours/lifetime
1	20000	-600000	225000	3319	-285512	10.9	0.2	4.1
2	20000	-200000	225000	2122	-286695	10.0	83.3	1665.7
3	20000	200000	225000	2069	-286679	10.3	179.9	3598.8
4	100000	-200000	225000	2218	-286602	13.3	891.3	17826.3
5	100000	-200000	675000	2511	-289772	15.3	0.3	5.2
6	100000	200000	225000	2493	-286696	13.3	2282.3	45646.9
7	100000	200000	675000	2821	-291829	16.0	0.8	15.5
8	100000	600000	225000	4322	-286807	14.8	3.8	75.7
9	180000	-600000	225000	4587	-284045	18.6	0.2	3.1
10	180000	-200000	225000	2804	-286627	16.8	104.2	2083.4
11	180000	-200000	675000	3222	-291739	17.0	0.6	12.4
12	180000	200000	225000	3316	-287019	17.0	180.0	3600.9
13	180000	200000	675000	3296	-292766	16.9	2.6	52.9
14	180000	600000	225000	4633	-285906	18.1	1.6	32.1
15	260000	-200000	225000	6815	-285962	19.2	0.3	5.2
16	260000	200000	225000	2806	-275763	19.4	0.1	2.1
17	100000	-600000	225000	9033	-283083	19.0	0.2	4.1
18	100000	-200000	225000	4121	-286254	17.2	87.3	1745.9
19	100000	-200000	675000	4240	-287991	18.5	1.4	27.6
20	100000	200000	225000	4682	-286254	17.5	332.8	6655.4
21	100000	200000	675000	4680	-290550	17.8	4.4	87.5
22	100000	600000	225000	7157	-286649	18.9	28.5	569.8
23	100000	600000	675000	5427	-286506	18.4	0.1	2.9
24	100000	1000000	225000	11835	-288095	19.9	0.2	4.1
25	180000	-600000	225000	7952	-285075	19.3	3.8	75.8
26	180000	-600000	675000	7123	-294384	18.2	0.1	1.2
27	180000	-200000	225000	4642	-286019	19.0	400.9	8017.1
28	180000	-200000	675000	4689	-289907	19.1	11.2	223.8
29	180000	200000	225000	5152	-286445	19.0	1085.1	21702.1
30	180000	200000	675000	4867	-290825	19.0	36.1	722.6
31	180000	600000	225000	7612	-287011	19.3	102.7	2055.0
32	180000	600000	675000	7583	-292106	19.4	4.6	92.8
33	180000	1000000	225000	12516	-290968	19.9	0.2	4.1

34	260000	-600000	225000	5031	-290643	19.7	0.1	1.8
35	260000	-200000	225000	5041	-285538	19.5	5.3	106.9
36	260000	-200000	675000	3960	-295206	19.5	0.3	5.9
37	260000	200000	225000	4456	-287353	19.4	8.1	161.6
38	260000	200000	675000	3618	-294831	19.3	0.6	11.7
39	260000	600000	225000	7182	-289402	19.4	0.9	17.6
40	20000	-1000000	225000	21480	-277905	19.6	0.0	0.9
41	20000	-1000000	675000	28562	-265367	20.0	0.1	1.0
42	20000	-1000000	1125000	27478	-258502	20.6	0.0	0.3
43	20000	-600000	225000	13278	-281355	19.6	0.8	16.5
44	20000	-600000	675000	16782	-269736	19.7	0.7	14.1
45	20000	-600000	1125000	13111	-263399	19.9	0.1	2.4
46	20000	-600000	1575000	16644	-248076	21.1	0.0	0.3
47	20000	-200000	225000	9683	-281947	19.5	7.1	141.6
48	20000	-200000	675000	11032	-272949	19.5	4.6	92.0
49	20000	-200000	1125000	13110	-262011	19.8	0.8	16.5
50	20000	-200000	1575000	9115	-255592	20.0	0.1	1.6
51	20000	200000	225000	10315	-281670	19.6	20.5	409.6
52	20000	200000	675000	9895	-272456	19.7	12.4	247.6
53	20000	200000	1125000	10567	-264922	19.8	2.0	40.7
54	20000	200000	1575000	4094	-258025	19.9	0.1	2.1
55	20000	600000	225000	14358	-280396	19.6	18.3	366.8
56	20000	600000	675000	14093	-272594	19.9	11.3	226.2
57	20000	600000	1125000	15568	-263664	19.9	1.8	36.0
58	20000	600000	1575000	17115	-255934	20.1	0.1	1.0
59	20000	1000000	225000	20143	-281193	19.6	5.8	116.6
60	20000	1000000	675000	20887	-272796	20.0	3.6	71.2
61	20000	1000000	1125000	22886	-262882	20.1	0.7	14.1
62	20000	1000000	1575000	24267	-270412	20.4	0.0	0.5
63	20000	1400000	225000	26425	-278015	19.8	0.5	9.6
64	20000	1400000	675000	30142	-266633	20.2	0.4	8.4
65	20000	1400000	1125000	31569	-263850	20.1	0.1	2.8
66	20000	1800000	225000	29173	-287219	20.0	0.0	0.5
67	100000	-1000000	225000	22321	-285205	19.7	0.2	3.5
68	100000	-1000000	675000	28350	-266119	20.2	0.1	3.0
69	100000	-1000000	1125000	27616	-254798	20.2	0.0	0.2
70	100000	-600000	225000	13937	-282797	19.7	10.9	218.0
71	100000	-600000	675000	16536	-273723	19.8	3.4	68.9
72	100000	-600000	1125000	18117	-259529	20.3	0.5	9.9
73	100000	-600000	1575000	21100	-249527	20.9	0.0	0.7
74	100000	-200000	225000	8628	-283111	19.6	205.7	4113.9
75	100000	-200000	675000	10341	-275004	19.8	37.7	753.0
76	100000	-200000	1125000	11599	-262550	20.0	2.7	54.6
77	100000	-200000	1575000	10967	-251579	20.2	0.1	2.1
78	100000	200000	225000	8504	-283256	19.6	637.5	12750.5
79	100000	200000	675000	9426	-275166	19.7	110.3	2206.8
80	100000	200000	1125000	10009	-263270	19.9	6.6	131.5
81	100000	200000	1575000	7456	-255105	19.7	0.1	3.0

82	100000	600000	225000	12367	-282606	19.7	319.9	6397.4
83	100000	600000	675000	13397	-274385	19.8	70.2	1404.8
84	100000	600000	1125000	13478	-263409	20.0	4.5	89.6
85	100000	600000	1575000	15411	-251004	20.4	0.1	1.6
86	100000	1000000	225000	18959	-281475	19.9	39.8	796.0
87	100000	1000000	675000	20063	-271627	20.1	13.0	260.3
88	100000	1000000	1125000	21906	-261081	20.3	1.4	28.4
89	100000	1000000	1575000	27272	-264831	20.6	0.0	0.2
90	100000	1400000	225000	27502	-281524	19.9	1.5	30.6
91	100000	1400000	675000	30090	-267357	20.5	0.8	15.3
92	100000	1400000	1125000	33490	-261367	20.6	0.1	2.8
93	180000	-600000	225000	11247	-284262	19.7	2.7	53.9
94	180000	-600000	675000	8742	-280270	19.6	0.2	4.2
95	180000	-600000	1125000	10875	-262229	20.3	0.0	0.2
96	180000	-200000	225000	7426	-284787	19.6	63.3	1266.2
97	180000	-200000	675000	7756	-285453	19.4	4.2	84.2
98	180000	-200000	1125000	8889	-294005	19.8	0.0	0.5
99	180000	200000	225000	7570	-285226	19.6	171.5	3429.3
100	180000	200000	675000	7980	-287840	19.6	13.8	275.8
101	180000	200000	1125000	7422	-298653	19.4	0.1	1.4
102	180000	600000	225000	10591	-285258	19.7	51.6	1032.0
103	180000	600000	675000	10623	-285666	19.7	5.1	102.1
104	180000	600000	1125000	7211	-275563	20.7	0.0	0.7
105	180000	1000000	225000	17150	-283905	19.8	3.0	59.7
106	180000	1000000	675000	19217	-284265	20.2	0.2	4.7
107	180000	1400000	225000	32722	-283244	19.8	0.1	1.0
108	260000	-600000	225000	10398	-288640	19.6	0.1	1.2
109	260000	-200000	225000	7938	-286091	19.4	1.0	19.7
110	260000	-200000	675000	6536	-295969	19.3	0.1	1.7
111	260000	200000	225000	6134	-286352	19.5	1.8	36.4
112	260000	200000	675000	6493	-292000	19.5	0.5	10.4
113	260000	600000	225000	9401	-288910	19.2	0.4	7.5
114	260000	600000	675000	9304	-289946	19.3	0.1	2.4

4.4 Torque Duration Curves

Rotor diameter is 70 m. Tables values are lifetime hours at the given torque and speed.

File: TimeAtLoad_LM34C02_HiRes.xls

Table 5. Torque Duration Curve—70-m Rotor

Shaft Torque	4.4.1.1.1.1.1 RPM							
kNm	**9**	**11**	**13**	**15**	**17**	**19**	**21**	**SUM**
150	527	0	0	0	0	0	0	527
170	1225	0	0	0	0	0	0	1225
190	1867	82	0	0	0	0	0	1949
210	553	2024	0	0	0	0	0	2577
230	1	2997	0	0	0	0	0	2998
250	0	3819	0	0	0	0	0	3819
270	0	3254	1	0	0	0	0	3255
290	0	2962	1274	0	0	0	0	4236
310	0	165	4722	0	0	0	0	4887
330	0	0	5837	0	0	0	0	5837
350	0	0	6963	0	0	0	0	6963
370	0	0	6806	0	0	0	0	6806
390	0	0	5965	732	0	0	0	6697
410	0	0	1031	4711	0	0	0	5742
430	0	0	7	4559	0	0	0	4566
450	0	0	0	3921	0	0	0	3921
470	0	0	0	4283	0	0	0	4283
490	0	0	0	4365	1	0	0	4366
510	0	0	0	3314	411	0	0	3724
530	0	0	0	943	2849	0	0	3791
550	0	0	0	19	3486	0	0	3505
570	0	0	0	0	3057	0	0	3057
590	0	0	0	0	3334	0	0	3334
610	0	0	0	0	3297	0	0	3297
630	0	0	0	0	2538	3	0	2541
650	0	0	0	0	1898	314	0	2212
670	0	0	0	0	507	1497	0	2005
690	0	0	0	0	21	2132	0	2154
710	0	0	0	0	0	3037	4	3041
730	0	0	0	0	0	4731	31	4762
750	0	0	0	0	0	7565	219	7784
770	0	0	0	0	0	11083	1329	12412
790	0	0	0	0	0	10665	3542	14207
810	0	0	0	0	0	3147	2440	5587
830	0	0	0	0	0	347	598	945
850	0	0	0	0	0	35	94	128
870	0	0	0	0	0	4	13	16
890	0	0	0	0	0	0	2	2

Rotor diameter is 77 ms. Table values are lifetime hours at the given torque and speed

File: TimeAtLoad_LM37C02_HiRes.xls

Table 6. Torque Duration Curve—77-m Rotor

Shaft Torque	RPM						
kNm	9	11	13	15	17	19	Total
190	3	0	0	0	0	0	3
210	846	0	0	0	0	0	846
230	1227	0	0	0	0	0	1227
250	2294	0	0	0	0	0	2294
270	3050	0	0	0	0	0	3050
290	2481	0	0	0	0	0	2481
310	2818	626	0	0	0	0	3444
330	209	2909	0	0	0	0	3118
350	0	3466	0	0	0	0	3466
370	0	4082	0	0	0	0	4082
390	0	4131	0	0	0	0	4131
410	0	4876	0	0	0	0	4876
430	0	6251	0	0	0	0	6251
450	0	5229	1151	0	0	0	6380
470	0	322	4824	0	0	0	5145
490	0	0	6209	0	0	0	6209
510	0	0	5156	0	0	0	5156
530	0	0	4442	0	0	0	4442
550	0	0	3233	0	0	0	3233
570	0	0	3400	0	0	0	3400
590	0	0	3543	0	0	0	3543
610	0	0	3844	347	0	0	4191
630	0	0	737	2663	0	0	3400
650	0	0	0	2806	0	0	2806
670	0	0	0	3596	0	0	3596
690	0	0	0	2957	0	0	2957
710	0	0	0	2637	0	0	2637
730	0	0	0	2417	0	0	2417
750	0	0	0	2499	0	0	2499
770	0	0	0	2590	1	0	2591
790	0	0	0	2044	29	0	2072
810	0	0	0	1162	869	0	2030
830	0	0	0	74	2091	0	2164
850	0	0	0	1	3595	0	3596
870	0	0	0	0	5219	3	5222
890	0	0	0	0	7999	25	8024
910	0	0	0	0	12752	93	12845
930	0	0	0	0	6089	131	6220
950	0	0	0	0	715	60	775
970	0	0	0	0	55	11	66
990	0	0	0	0	4	1	5

Attachment I

Raw Rainflow Counts

Range values are bin means in kNm

Cycle values are rainflow counts per 20-year lifetime

Abbreviations: S = shaft coordinate system; N = nacelle coordinate system

MxTorq S	MxTorq S	My S	My S	Mz S	Mz S	MyPitch N	MyPitch N	MzYaw N	MzYaw N
kNm	cycles	kNm	cycles	kNm	cycles	kNm	cycles	kNm	cycles
7	1.83E+09	33	7.16E+08	32	6.90E+08	30	5.58E+08	26	6.61E+08
20	3.08E+08	98	1.13E+08	95	1.13E+08	90	9.44E+07	78	9.10E+07
33	1.23E+08	163	5.40E+07	158	5.54E+07	150	8.28E+07	130	6.79E+07
46	5.05E+07	228	3.81E+07	221	3.61E+07	210	7.42E+07	182	6.97E+07
59	2.37E+07	293	2.97E+07	284	2.60E+07	270	5.95E+07	234	6.38E+07
72	1.29E+07	358	2.15E+07	347	2.44E+07	330	4.60E+07	286	5.18E+07
85	6.28E+06	423	2.08E+07	410	2.19E+07	390	3.30E+07	338	3.42E+07
98	3.76E+06	488	1.79E+07	473	1.93E+07	450	2.39E+07	390	2.85E+07
111	2.43E+06	553	1.46E+07	536	1.43E+07	510	1.55E+07	442	1.93E+07
124	1.90E+06	618	1.12E+07	599	1.15E+07	570	1.25E+07	494	1.67E+07
137	1.20E+06	683	9.64E+06	662	1.12E+07	630	1.05E+07	546	1.16E+07
150	7.07E+05	748	8.73E+06	725	8.33E+06	690	6.39E+06	598	9.31E+06
163	8.53E+05	813	7.30E+06	788	7.59E+06	750	4.67E+06	650	5.29E+06
176	5.40E+05	878	5.56E+06	851	5.98E+06	810	3.49E+06	702	4.68E+06
189	6.19E+05	943	4.19E+06	914	5.58E+06	870	2.16E+06	754	3.84E+06
202	6.75E+05	1008	4.21E+06	977	3.99E+06	930	2.04E+06	806	2.55E+06
215	2.79E+05	1073	2.72E+06	1040	2.87E+06	990	1.96E+06	858	2.66E+06
228	3.27E+05	1138	2.65E+06	1103	2.14E+06	1050	1.40E+06	910	1.73E+06
241	1.59E+04	1203	1.54E+06	1166	2.66E+06	1110	1.22E+06	962	1.42E+06
254	1.21E+05	1268	1.54E+06	1229	1.88E+06	1170	6.41E+05	1014	9.21E+05
267	7.93E+03	1333	1.53E+06	1292	1.12E+06	1230	7.06E+05	1066	1.10E+06
280	1.33E+04	1398	6.15E+05	1355	9.40E+05	1290	4.27E+05	1118	6.96E+05
293	3.97E+03	1463	8.00E+05	1418	9.63E+05	1350	5.65E+05	1170	3.85E+05
306	1.94E+05	1528	6.57E+05	1481	5.84E+05	1410	3.29E+05	1222	2.43E+05
319	2.78E+05	1593	4.72E+05	1544	5.61E+05	1470	3.04E+05	1274	3.55E+05
332	1.67E+05	1658	2.58E+05	1607	2.95E+05	1530	9.91E+04	1326	4.67E+05
345	0.00E+00	1723	2.38E+05	1670	3.78E+05	1590	1.87E+05	1378	1.68E+05
358	8.55E+04	1788	9.15E+04	1733	4.15E+05	1650	7.75E+04	1430	3.20E+05
371	1.67E+05	1853	1.15E+05	1796	1.44E+05	1710	9.85E+04	1482	1.38E+05
384	2.76E+05	1918	1.14E+05	1859	1.55E+05	1770	6.84E+04	1534	2.01E+05
397	0.00E+00	1983	1.39E+05	1922	4.24E+04	1830	7.93E+03	1586	6.80E+04
410	1.67E+05	2048	1.59E+04	1985	4.44E+04	1890	7.79E+04	1638	1.69E+05
423	0.00E+00	2113	7.99E+04	2048	8.19E+04	1950	1.19E+04	1690	6.46E+04

436	1.92E+05	2178	1.19E+04	2111	1.39E+04	2010	1.72E+04	1742	3.25E+04
449	0.00E+00	2243	5.93E+04	2174	6.46E+04	2070	1.13E+04	1794	2.46E+04
462	1.92E+05	2308	7.93E+03	2237	9.92E+03	2130	1.98E+03	1846	2.26E+04
475	8.35E+04	2373	2.85E+04	2300	1.72E+04	2190	5.95E+03	1898	1.98E+03
488	0.00E+00	2438	1.33E+04	2363	1.53E+04	2250	1.13E+04	1950	6.80E+04
501	1.92E+05	2503	1.33E+04	2426	3.97E+03	2310	0.00E+00	2002	9.31E+03
514	0.00E+00	2568	7.93E+03	2489	1.33E+04	2370	5.95E+03	2054	1.92E+04
527	0.00E+00	2633	3.97E+03	2552	1.33E+04	2430	1.33E+04	2106	4.74E+04
540	0.00E+00	2698	0.00E+00	2615	5.95E+03	2490	9.31E+03	2158	5.95E+03
553	1.92E+05	2763	0.00E+00	2678	1.98E+03	2550	0.00E+00	2210	1.98E+03
566	0.00E+00	2828	1.98E+03	2741	0.00E+00	2610	0.00E+00	2262	1.33E+04
579	0.00E+00	2893	1.98E+03	2804	1.98E+03	2670	0.00E+00	2314	1.98E+03
592	0.00E+00	2958	0.00E+00	2867	0.00E+00	2730	3.97E+03	2366	1.98E+03
605	0.00E+00	3023	0.00E+00	2930	0.00E+00	2790	1.98E+03	2418	3.97E+03
618	0.00E+00	3088	0.00E+00	2993	0.00E+00	2850	0.00E+00	2470	0.00E+00
631	0.00E+00	3153	0.00E+00	3056	1.98E+03	2910	0.00E+00	2522	0.00E+00
644	1.92E+05	3218	1.98E+03	3119	1.98E+03	2970	1.98E+03	2574	0.00E+00
657	0.00E+00	3283	0.00E+00	3182	0.00E+00	3030	0.00E+00	2626	1.98E+03

Appendix D:
WindPACT Drivetrain Loads Document

B						
A		Original	11/21/02	GLB	GLB	JAL
Rev.	Pages Affected	Description	Date	Prepared By	Approved By	Project Approval

Northern Power Systems

Waitsfield, VT 05673

(802) 496-2955

Table of Contents

1 Introduction 1
2 Scope 1
3 Turbine Description 1
3.1 Turbine Architecture 2
3.2 Turbine Specifications 2
3.3 Turbine Safety, Control, Operation 3
4 Loads Methodology 5
References and Standards 12

Figures

Figure 1. 1.5 MW baseline power curve 4
Figure 2. 3.0 MW baseline power curve 5
Figure 3. Hub coordinate system 7
Figure 4. Nacelle coordinate system 7
Figure 6. 3 MW Campbell diagram 12

Tables

Table 1. Turbine drivetrain specifications—IEC WTGS Class II 3
Table 2. Design loads cases 6
Table 3. Output loads 8
Table 4. Material exponents 10
Table 5. Partial loads factors 11

1 Introduction

The following turbine loads specification is being written under subcontract #YCX-1-30209-02, Advanced Wind Turbine Drive Train Designs, of the WindPACT study. This study seeks to advance the state of the art in wind turbine technology by exploring innovative concepts in rotor design, drive train designs, logistics, and an increased understanding of peripheral costs. Under the current study, several megawatt-scale drive train architectures will be investigated, the most promising will be selected and a preliminary design will be completed.

This loads document describes the process by which the loads for both the 1.5MW and 3.0MW turbine were arrived at. The loads were calculated with the spirit of the turbine safety standards IEC 61400-1 [1] and Germanischer Lloyd (GL) [2]. We used a truncated set of design load cases which were determined to be the dimension driving cases for turbines of the type considered here. A more complete set of load cases will be considered during the final design, so that the loads document will conform to and may be certified by one of the main governing bodies.

The approach used was to employ an aeroelastic simulation code to calculate drivetrain loads under a variety of operational and parked cases. A "typical" turbine of the given size was modeled which included blade and tower flexibilities, variable speed operation, and pitch control. Loads were processed using a variety of programs to produce loads useful for the design of the various drive components – shafting, bearings, gears and bedplates. These loads were used to dimension the turbine components. More complete loads processing will be used during final design.

This document does not include the actual loads, but only describes the process by which they were calculated. The design loads are given in the loads specifications

1. 0400261_D_NW1500LoadsSpecification.doc
2. NW3000LoadsSpecification_A.doc.

2 Scope

The loads presented in this document apply to the turbine configurations described in the Turbine Specification (04-00047_B_WindPACTTurbineSpecification.doc), and summarized below in Table 1. Deviations from these specifications will require a review of the loads.

3 Turbine Description

The following turbine description is provided for reference and is intended to provide the level of understanding of the turbine design necessary to enable calculation of the turbine and drivetrain loads necessary for this study. More detail can be found in the Turbine Specification, Doc # 04-00047_B_WindPACTTurbineSpecification.doc. Vendor data used to create the input files for the FAST code is not included here due to issues of confidentiality.

3.1 Turbine Architecture

The turbine has a three-blade, independently pitch-controlled upwind rotor with a rigid hub. The coning angle is 0 degrees (although the rotor may be "predeflected" upwind), and the angle of the low-speed shaft is 5 degrees with respect to horizontal. The rotor/drivetrain operates at variable speed.

The drivetrain comprises the rotating equipment and bearings from the hub flange to the generator; the associated electronics and controls; the structural element that supports the rotating equipment and transmits loads to the tower; and the power converter.

A tubular steel tower is assumed for loads and foundation calculations. The only specific tower requirement is to maintain a similar height and natural frequency.

The turbine controller oversees all turbine operation and all safety and state transitions, except to maintenance mode. It allows remote monitoring and supervisory control of the wind turbine, as well as fault/alarm data storage. The turbine controller is described in more detail below.

The power controller is described in Section 3.3 below.

3.2 Turbine Specifications

The table below illustrates typical specifications for the turbine design.

Table 1. Turbine Drivetrain Specifications—IEC WTGS Class II

Electrical power rating[a]	1.5 MW	3 MW
Low-speed shaft speed		
Minimum (n1)	12.0 rpm	8.5 rpm
Rated (nr)	19.7 rpm	15.3 rpm
Maximum operating (n2)	22.2 rpm	17.0 rpm
Overspeed shutdown (1.1*n2)	24.4 rpm	16.8 rpm
Maximum design (1.25 * n2)	27.8 rpm	19.1 rpm
Low-speed shaft power		
Mechanical rating (Pr)	1.603 MW	3.206 MW
Maximum operating (Pt=1.0*Pr)	1.603 MW	3.206 MW
Maximum instantaneous (Pmax=1.1*Pr)	1.763 MW	3.527 MW
Reference		
Cut-in wind speed	3 mps	3 mps
Rated wind speed	12 mps	12 mps
Cut-out wind speed	25 mps	25 mps
Rotor diameter	70.5 m	94.8 m
Hub height	84.0 m	112.0 m
Design life	20 yr	20 yr

Values for the baseline configurations are derived from turbine simulations and Germanischer Lloyd recommendations.
[a]Rated electrical power values assume 94% drivetrain efficiency at converter output.

3.3 Turbine Safety, Control, Operation

3.3.1 Turbine Safety

Three independently pitching blades compose the turbine safety system. Normal and emergency shutdowns are achieved by pitching the three blades simultaneously. Redundant safety is inherent in this design because the turbine can be brought to a safe condition despite the failure of one pitch drive. In either case, the rotor can be brought to rest by applying the shaft disk brake after the rotor is slowed by the pitching action of the blades.

3.3.2 Turbine Operation

The controller supervises all turbine operations. Only the transition to the maintenance state is initiated through human-machine interface. Following are the turbine's operating states:

- *Idling.* The blades are pitched to the feathered position, and the rotor can turn freely. The turbine is "waiting for wind."
- *Startup.* The blades are pitched to the startup position when the wind speed approaches cut-in wind speed.

- *Generating.* The turbine is producing power. The output power injected into the grid is controlled as a function of rotor speed. The power command is clamped at the machine rating, and blade pitch is adjusted to limit the rotor speed at rated output.
- *Normal shutdown.* The blades are pitched slowly to feather.
- *Emergency shutdown.* The blades are pitched quickly to feather.
- *Parked*. The blades are pitched to feather, and the parking brake is applied.
- *Maintenance*. The blades are pitched to feather, the parking brake is applied, and the turbine is locked out.

3.3.3 Power Control

The turbine controller assumed for the study was designed and implemented in the FAST program by Windward Engineering. The controller holds the optimum pitch angle below rated power, and holds rotor speed to rated at and above rated windspeed.

3.3.4 Power curves

Figure 1 shows the power curve for the 1.5 MW baseline turbine and Figure 2 shows the power curve for the 3 MW turbine. There will be slight variations in the power curve for different drivetrain configurations due to variations in drive efficiency.

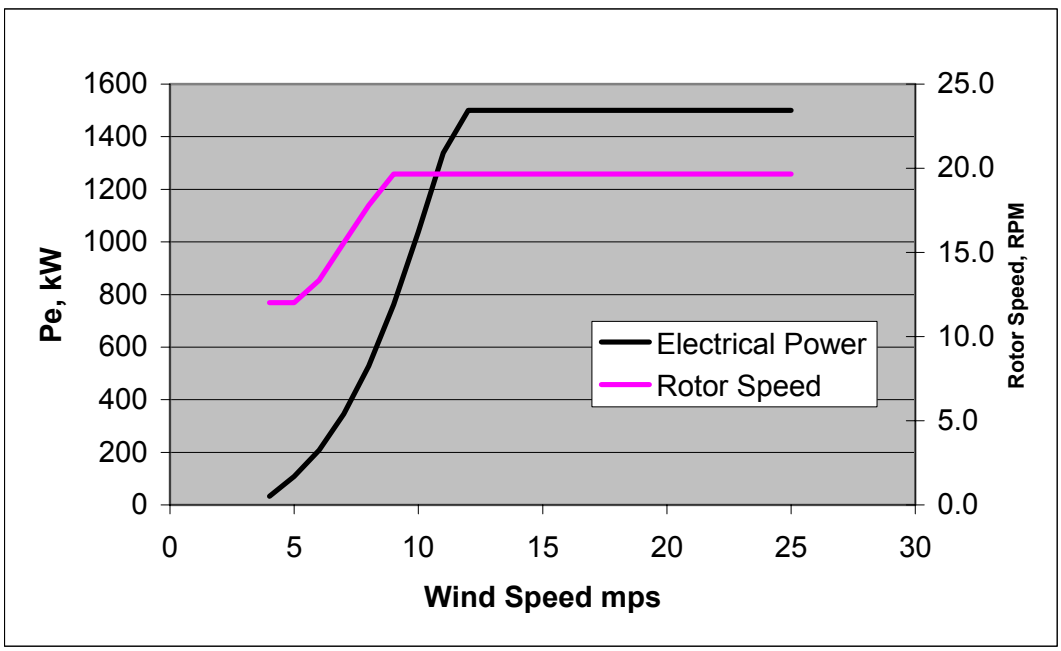

Figure 1. 1.5 MW baseline power curve

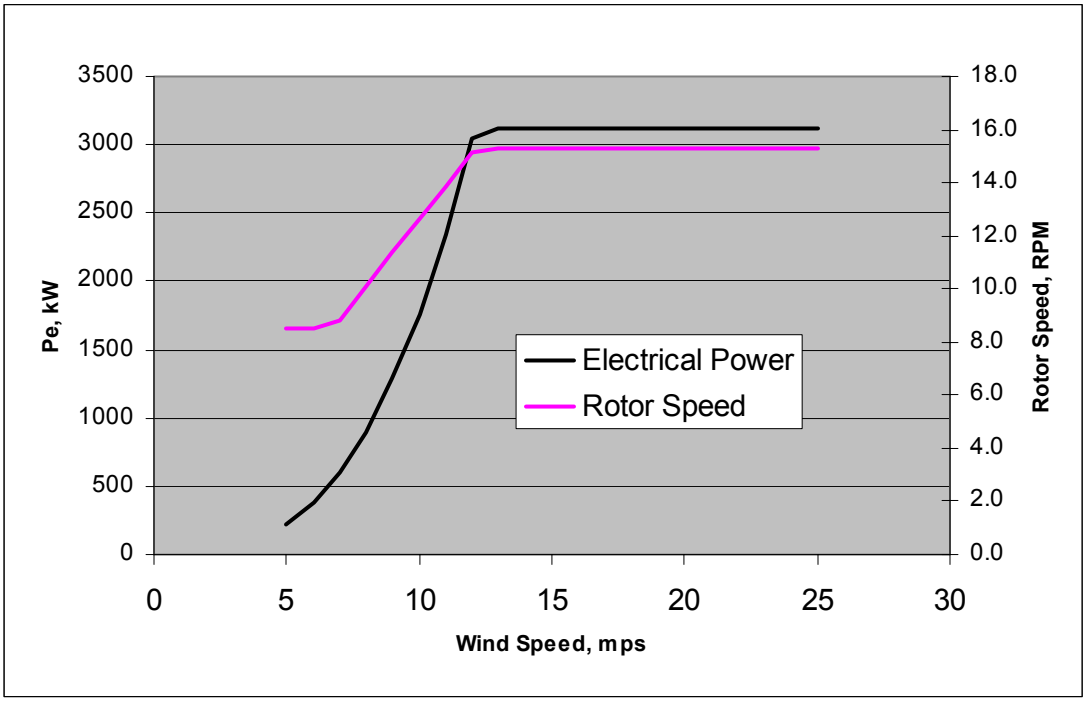

Figure 2. 3.0 MW baseline power curve

4 Loads Methodology

This section describes how we established loads for the 1.5 MW and 3 MW turbines. The loads specification contains the computed loads.

The following loads were calculated for design purposes:

- Shaft torque duration loading
- Bearing load duration histograms
- Shaft-end extreme loads
- Shaft-end fatigue load histograms

We employed an aeroelastic simulation code to calculate drivetrain loads under various operational and parked cases. A "typical" turbine of a given size was modeled, including blade and tower flexibility, variable speed operation, and pitch control. We used an assortment of programs to produce loads for designing drivetrain components—shafts, bearings, gears, and bedplates. These loads were then used to dimension the turbine components.

4.1 Loads cases

We used a truncated set of design loads cases that we determined were the dimension-driving cases for the turbines considered in Phase I of the WindPACT project. A more complete set of loads cases will be used for the detailed design in Phase II to ensure the

loads specification conforms to a main governing body, such as Germanischer Lloyd or Underwriters Laboratories. The loads given in the specification were calculated in the spirit of IEC (1999) and Germanischer Lloyd (1999) standards.

4.2 Modeling

Turbine and Wind Models

We used the FAST (Buhl and Jonkman 2002) wind turbine dynamics program to calculate loads. We used the SNWind program (Kelley 2001) to generate turbulent wind files and the IECWind program (Laino 2001) to generate discrete gust events.

Coordinate systems. Figures 3 and 4 show the coordinate systems used by the FAST program. The coordinate systems correspond to those defined by Germanischer Lloyd (1999).

Table 2 shows the loads cases used as the basis for dimensioning.

Table 2. Design loads cases

Design situation	DLC	Wind condition	Type of analysis	Comments
Power production	1.1	NTM	U	6 seeds each at 8, 12, 16, 20, and 24 mps
	1.2	NTM	F	6 seeds each at 8, 12, 16, 20, and 24 mps
	1.3	ECD_00NR	U	1 run at 12 mps
	1.3	ECD_00PR	U	1 run at 12 mps
	1.6	EOG_01_	U	2 runs total at 12 and 24 mps
		EOG_50_	U	2 runs total at 12 and 24 mps
	1.7	EWSH00N	U	2 runs total at 12 and 24 mps
		EWSH00P	U	2 runs total at 12 and 24 mps
		EWSV00	U	2 runs total at 12 and 24 mps
		EWSV00p	U	2 runs total at 12 and 24 mps
	1.8	EDC_50N	U	2 runs total at 12 and 24 mps
		EDC_50P	U	2 runs total at 12 and 24 mps
		EDC_01N	U	2 runs total at 12 and 24 mps
		EDC_01P	U	2 runs total at 12 and 24 mps
	1.9	ECG_00_R	U	1 run at 12 mps
Parked	6.1	NTM, V_{mean} = 42.5 mps	U	3 seeds total

Abbreviations: DLC = design loads case; F = fatigue; mps = meters per second; NTM = normal turbulence model; U = ultimate

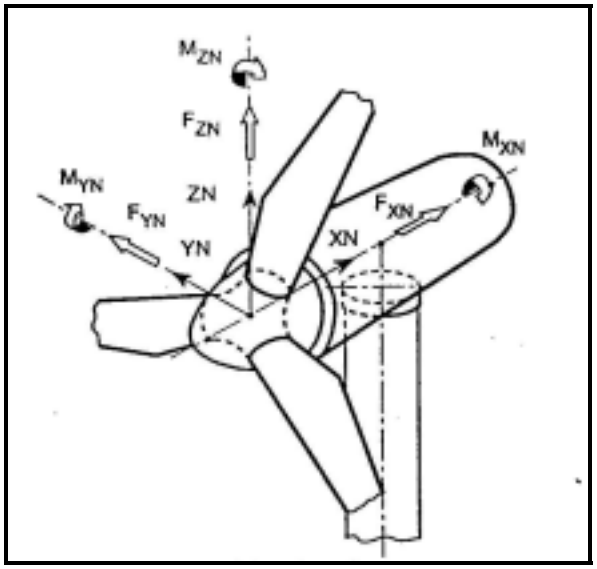

Figure 3. Hub coordinate system

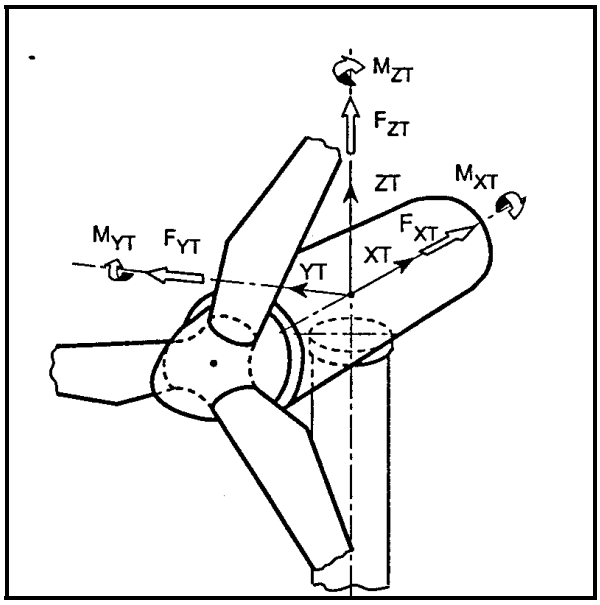

Figure 4. Nacelle coordinate system

Table 3. Output Loads

Signal name	FAST designation	Coordinate system	Vector
Mechanical power	LSShftPwr	—	
Electrical power	GenPwr	—	
Rotor rpm	RotSpeed	—	
Rotor thrust	RotThrust	Hub	Fx
Hub side force	LSShftFys	Hub–nr	Fy
Hub vertical force	LSShftFzs	Hub–nr	Fz
Shaft torque	RotTorq	Hub–r	Mx
Hub pitch moment	LSSGagMys	Hub–nr	My
Hub yaw moment	LSSGagMzs	Hub–nr	Mz
Hub–r side force	LSShftFya	Hub–r	Fy
Hub–r vertical force	LSShftFza	Hub–r	Fz
Hub–r pitch moment	LSSGagMya	Hub–r	My
Hub–r yaw moment	LSSGagMza	Hub–r	Mz
Nacelle horizontal force	YawBrFxn	Nacelle @ Yaw Bearing	Fx
Nacelle side force	YawBrFyn	Nacelle @ Yaw Bearing	Fy
Nacelle vertical force	YawBrFzn	Nacelle @ Yaw Bearing	Fz
Nacelle roll moment	YawBrMxn	Nacelle @ Yaw Bearing	Mx
Nacelle pitch moment	YawBrMyn	Nacelle @ Yaw Bearing	My
Nacelle yaw moment	YawBrMzn	Nacelle @ Yaw Bearing	Mz

Abbreviations: FAST = fatigue, aerodynamics, structures, and turbulence

Output Loads

Table 3 shows the required program output for the drivetrain design. Loads were output in both rotating and nonrotating coordinate systems. The coordinate systems were differentiated by appending "–r" or "–nr" to the coordinate system name.

Data Processing

The following paragraphs describe the programs and formulas used to process data. The loads specifications contain the computed output.

We used Crunch (Buhl 2002) to compute statistics and extreme and fatigue loads, and we used a spreadsheet created by Windward Engineering to calculate damage-equivalent loads. Working with Windward, we created a program to develop bearing load histograms.

Run statistics. Statistics for each run file were calculated and used primarily for reference.

Extreme loads. Extreme loads were calculated using Crunch. The loads in the specifications are time-coordinated loads taking the maximum of each signal in turn.

Rainflows and damage-equivalent loads. Rainflows were calculated using Crunch and converted to damage-equivalent loads for the preliminary design.

Damage-equivalent loads. Damage-equivalent loads were calculated using the formulas that follow.

The damage-equivalent load Req is

$$Req = [\ (\Sigma n_i\ R_i^{m)}\ /Neq\ ]^{(1/m)}$$

where

Neq	=	number of cycles
m	=	material exponent
R_i	=	load
n_i	=	number of cycles of load R_i
$[n_i,R_i]$	=	distribution of range loads

Part life L is

$$L = [a(uReq)^{-m}]/Neq$$

where

u	=	unit stress function (stress/load) for the section/detail in question
a	=	material dependent coefficient.

Damage at design life D is

$$D = L_D \times 1/L$$

where

L_D	=	design life.

The fatigue curve slopes in Table 4 were used to compute damage-equivalent loads.

Table 4. Material Exponents

Material	Loading	Material exponent *m*
Iron casting	Normal stress	8.8
Weldment	Normal stress	3.0
Forging	Normal stress	12.5
Bolted joint	Normal stress	3.0
All	Shear	5.0

Torque duration curves. Torque duration curves were computed as 2D histograms with the time-coordinated torque and speed values binned together.

Bearing loads. For bearing design, multidimensional histograms were calculated at the location corresponding to the shaft flange. The histogram shows the operating hours at time-coordinated values of shaft speed, thrust and radial loads, and shaft-end moments. For bearing design calculations, the moments were converted to radial load based on the given bearing configuration.

4.3 Input Files

We developed input files using information from manufacturers and results from our preliminary design exercises. Company L provided the blade structural and aerodynamic properties for the 1.5-MW turbine, and Company M provided the blade structural and aerodynamic properties for the 3-MW turbine. The 3-MW turbine blade was modified slightly to increase tip diameter.

We used the preliminary designs for rotor hub, drivetrain, and tower to create the remaining structural inputs. Windward Engineering developed the inputs for the pitch controller for the 1.5 MW turbine; these inputs were tuned by Northern for the 3 MW turbine.

4.4 Turbine design loads

Documents

1. 0400261_D_NW1500LoadsSpecification.doc
2. NW3000LoadsSpecification_A.doc.

contain the design loads for the 1.5 MW and 3 MW turbines. The specification covers the extreme loads, cyclic fatigue loads, bearing fatigue loads, and torque duration curves. Table 5 shows the partial loads factors used in the analysis.

Table 5. Partial loads factors

Applied to	Value
Extreme loads	1.35
Fatigue loads	1.00

Source: IEC (1999).

4.5 Dynamics

The loads in the Loads Specifications are based on component stiffness properties, which lead to the system dynamics shown in Figures 5 and 6. Changes in machine configuration (e.g., hub height and rotor diameter) that affect machine dynamics require reevaluation of the turbine design loads.

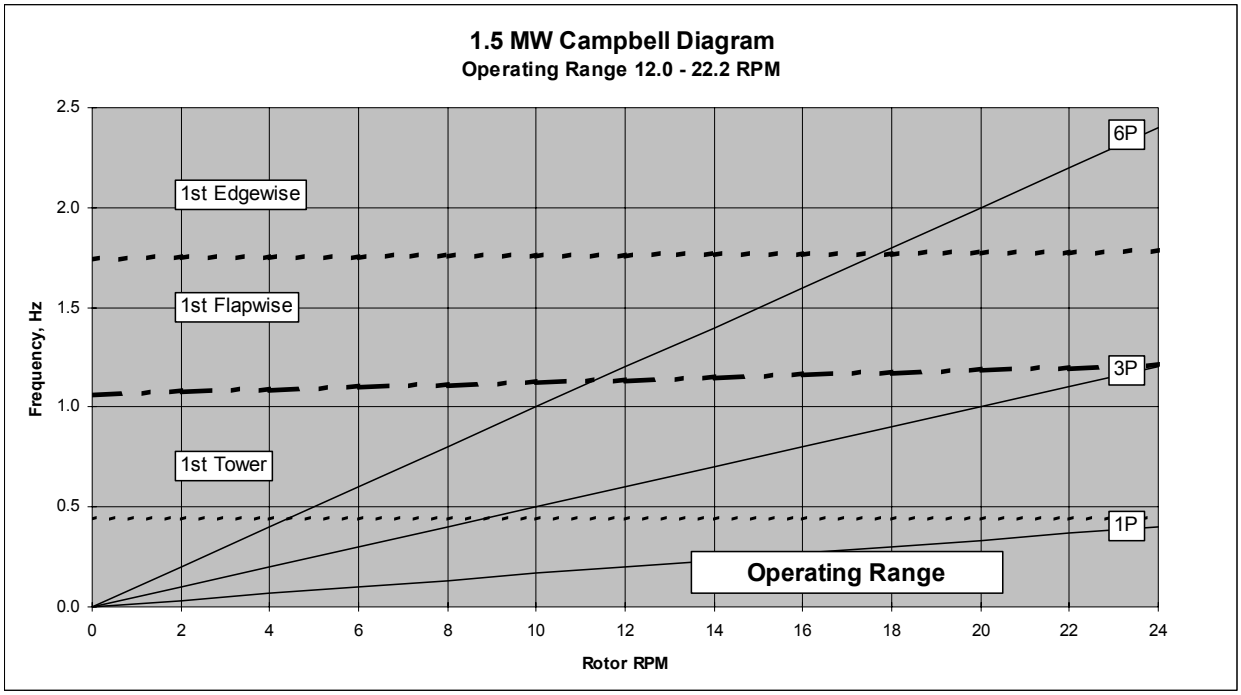

Figure 5. 1.5 MW Campbell diagram

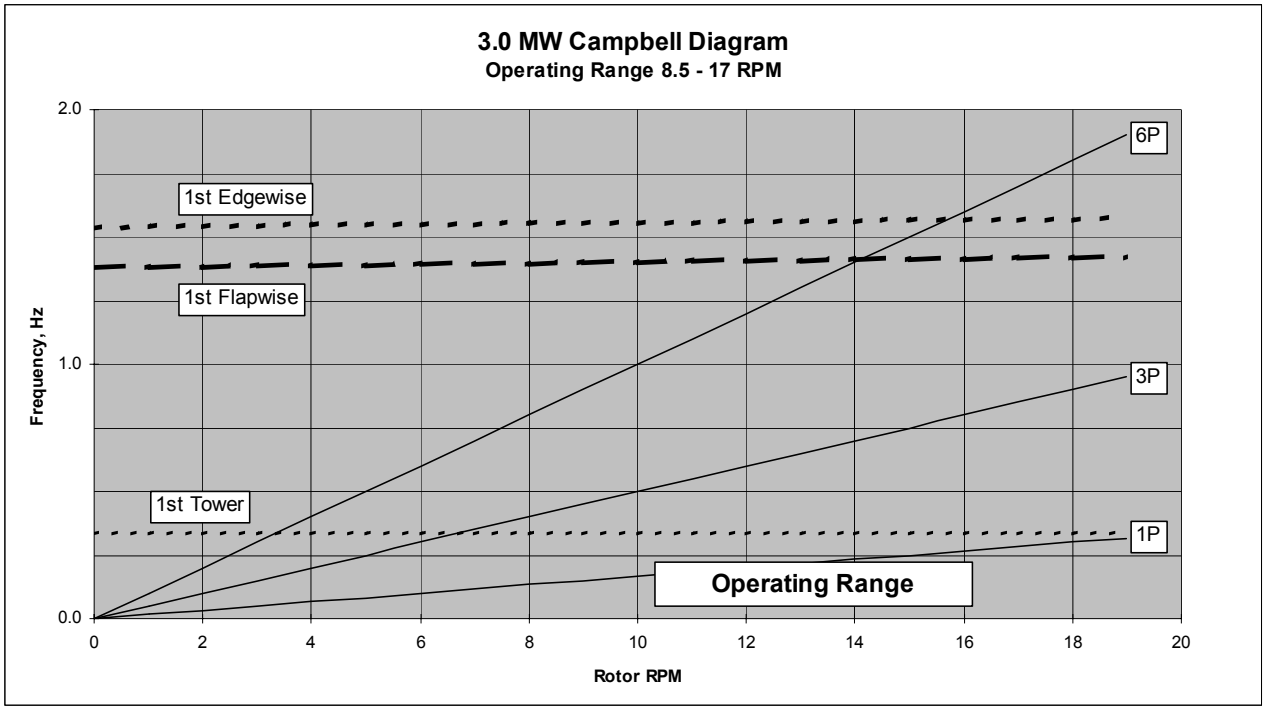

Figure 6. 3 MW Campbell diagram

References and Standards

1. IEC 61400-1. *Wind Turbine Generator Systems, Part 1: Safety Requirements*. 2nd edition. 1999.
2. Germanischer Lloyd. *Non-Marine Technology, Part 1: Regulations for the Certification of Wind Energy Conversion Systems*. Rules and Regulations, IV. 1999.
3. Turbine Specification, Document #04-00061-D.
4. SNWind [http://wind.nrel.gov/designcodes/].
5. IECWind [http://wind.nrel.gov/designcodes/].
6. Crunch [http://wind.nrel.gov/designcodes/].
7. FoilCheck [http://wind.nrel.gov/designcodes/].
8. Modes [http://wind.nrel.gov/designcodes/].
9. CombEEV[http://wind.nrel.gov/designcodes/].
10. SNLWind3D [http://wind.nrel.gov/designcodes/].
11. UserGuideV1p1_BinBrgLoads.doc.

Appendix E: Generator Technology

Prepared by Allan Chertok

June, 2002

Northern Power Systems
Waitsfield, VT 05673
(802) 496-2955

Table of Contents

1 Prior Drivetrain Studies 1
1.1 Direct Versus Gear-driven Generators 1
1.2 Direct-drive Generator Configurations 3
1.3 Exploiting Advanced and Traditional Generator Concepts 10
1.4 Promising Concepts 11
2 Component and Material Advances 14
2.1 Doubly fed Generator Brush System 14
2.2 Neodymium Iron Boron Magnets 14

The present investigation of generators for wind turbine drivetrain alternatives can benefit from lessons learned by others reported in technical or trade literature. To this end, a technology assessment has been conducted to identify concepts, data, trends or other information that might assist this work.

Subject areas of this assessment are summarized in Table 1.

Table 1. Technology assessment topics

Section	Topic
Prior drivetrain studies	Systems; generators
Component and material advances	Brushes/sliprings; magnets

Reports of prior and on-going drivetrain studies and other sources relevant to these topics have been identified and reviewed. Salient findings of these investigations and trends observed by this review are summarized in the discussion that follows.

1 Prior Drivetrain Studies

1.1 Direct Versus Gear-driven Generators

It is clear from the list of references provided below that investigation of the direct drive generator for large-scale wind turbines has attracted predominant attention. The advantages of system simplicity, avoidance of costly gear failures and quiet operation promised by the direct drive approach are universally recognized. Indeed, Florida Power and Light, the leading owner/operator of the wind power plants in the United States, reported to a representative of Arthur D. Little [29] that gearbox failures were the most significant (loss of availability, maintenance cost, etc.)

Also appreciated by all investigators is the challenge that a viable direct-drive, turbine speed generator must attain a very high mass-specific torque capacity in order to compete with the classical gear-driven high-speed squirrel cage or doubly fed wound rotor induction configurations.

Endorsing the enthusiasm for the direct-drive solution evident in most of these reports is the great number of large direct-drive, wound field generator units sold by Enercon (500 kW to 1.5 MW) starting in 1994 and those now being introduced to the market by Lagerwey (750 kW) and Jeumont. The Jeumont unit is noteworthy for its use of permanent magnet excitation.

Notwithstanding the successful commercialization of large-scale direct-drive wind turbines by Enercon since 1994, other wind turbine manufacturers have not embraced this approach and world wide installed capacity is predominantly represented by gear-driven units (>85 % of installed capacity).

Bohmeke and Boldt [4] report “a clear advantage for the gear-driven configuration.” They make the point that the disadvantages of structure-born noise and risk of (oil) leakage of the gear-

driven unit can be overcome by comparatively inexpensive measures. The authors believe that the direct-drive can compete economically only if very high failure rates are assumed for geared drives. Rahlf, Osthorst, and Gobel [3] note that the trend toward weight-optimized construction presents the risk that designers may size structures to accommodate stresses with insufficient attention to provision of adequate stiffness. As a consequence, deflections of structures such as hubs and gearboxes may induce premature failure of bearings. Inadequate gearbox stiffness may also promote gear failures as well.

One conclusion implied by the reports of these investigators is that gearbox failures, which the direct-drive approach would avoid, might also be overcome by better gearbox design.

Some drivetrain system investigations (e.g., Grauers [13] and Chertok and Lucas [14]) include a comparison of life-cycle economics of the direct-drive solutions with the gear-driven high-speed generator alternative considering at least the initial cost and cost of inefficiency. However, these economic assessments do not make allowance for the cost of gear drive failures. Grauers's doctoral thesis [13] provides one of the most comprehensive investigations of direct-drive designs and comparisons with competing gear-driven high-speed induction generators. Table 2 presents a comparison of these alternatives by Grauers, who has invested much effort in analyzing the annual average efficiency as a function of site wind speed distribution. He found a small efficiency advantage on this basis for the direct-drive approach, which is burdened with additional losses due to power conversion. Rated power efficiency is lower for the direct-drive solution, but has no relevance to annual energy production.

Table 2. Comparison of a Constant-speed, High-speed, Gear-driven Induction Generator and Variable-speed, Direct-drive PM Axial Field Generators

Configuration	Characteristic	500 kW	3 MW
Constant speed high-speed induction	Generator + gearbox weight (lb)	17,000	117,000
Variable speed direct-drive PM axial	Electromagnetic material weight (lb)	6,000	31,000
Constant speed high-speed induction	Full load generator + gear efficiency (%)	93.7	94.3
Variable speed direct-drive PM axial	Full load generator + converter efficiency	90.3	91.4
Constant speed high-speed induction	Average generator + gear efficiency (%)	88.4	90.0
Variable speed direct-drive PM axial	Average generator + converter efficiency	90.7	91.6
Constant speed high-speed induction	Generator + gearbox diameter/length (ft)	4.9 / 9.8	8.2 / 20
Variable speed direct-drive PM axial	Diameter/length (ft)—without enclosure	8.9 / 3.9	16.4 / 6.6

Source: Grauers [13].

Most of the direct-drive investigations are more narrowly focused on identification and analysis of innovative measures to reduce the size, weight, and cost of the generator to enable this solution to compete with conventional gear-driven high-speed generators. The potential for greater energy productivity of most direct-drive designs that are operable in variable speed mode is often cited as an economic advantage over fixed speed gear-driven units. Unfortunately, the Kennetech patents, well-known to those versed in this art, which are now owned by General Electric (formerly Zond and Enron Wind), will inhibit competition in the manufacture and sales of variable speed wind turbines in the United States for approximately 10 years.

1.2 Direct-drive Generator Configurations

1.2.1 Classification of Generator Configurations

Most investigators place generator configurations in one of three top-level classes—axial, radial and transversal flux—distinguished by the features noted in Table 3.

Transversal flux machines are inherently single phase, and multiple sections are typically configured for two-phase operation to avoid the penalty of pulsating power flow.

The radial flux configuration is by far the most widely used for all forms of electrical machinery and wind turbine generators in particular. The ABB Windformer generator in Figure 1 is a typical example of a radial flux configuration.

Table 3. Distinguishing Aspects of Radial, Axial, and Transversal Flux Generators

Generator configuration	Torque productive armature current path wrt rotation axis	Torque productive field flux path wrt axis indicated	Winding	Phases
Radial flux	Parallel	Radial wrt rotation axis	Distributed or concentrated	Typically 3
Axial flux	Radial	Parallel wrt rotation axis	Distributed or concentrated	Typically 3
Transversal flux	Circumferential	Toroidal wrt current axis	Concentrated	1 only

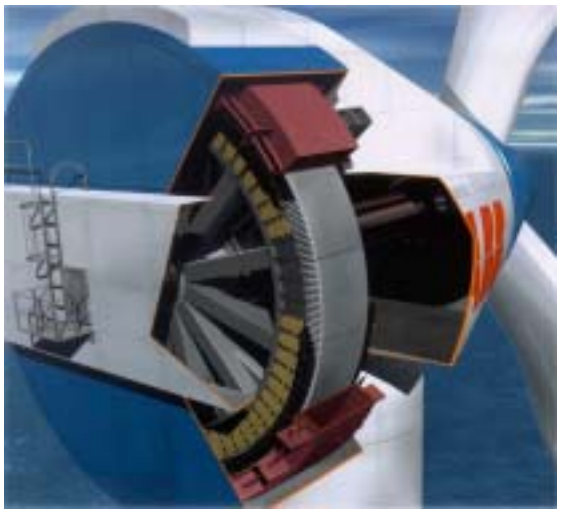

Figure 1. ABB Windformer radial field generator

While most radial flux machines are internal rotor designs with the rotor fitted in a bore formed in the stator (armature) some applications configure the rotor to surround the stator. These external rotor machines are sometimes employed where a high rotor inertia is desired to smooth torque pulsations, an example being tape deck capstan drives. External rotor PM machines are used widely to power fans whose blades are fixed directly to the rotor housing. PM external rotor designs can offer a decided size, weight and cost advantage and this configuration, which has been used for small direct-drive wind generators may deserve consideration for larger scale applications as well.

Axial flux machines were envisioned at the dawn of the electrical age and while still the subject of on-going academic interest commercial units are found only in highly specialized applications such as computer disk drives and industrial servomotors where they are favored for their relatively low rotor inertia. An illustration of a permanent magnet axial flux machine configuration is depicted in Figure 2.

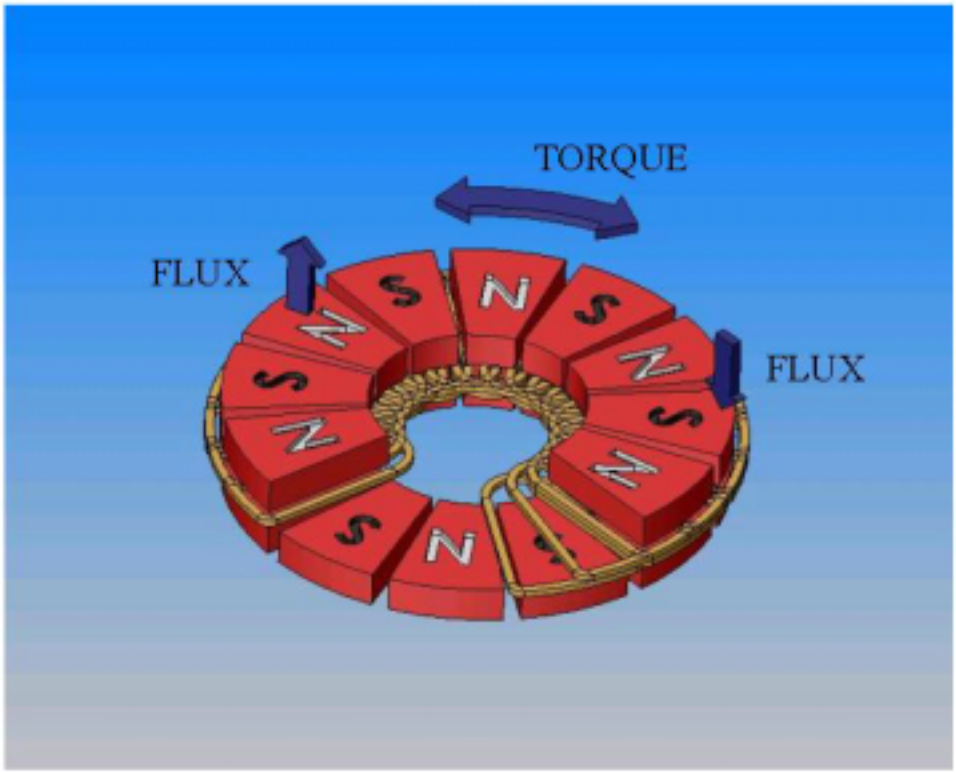

Figure 2. PM axial flux configuration

Prior analyses by Grauers [13] and Chertok and Lucas [14] found the axial field configuration deficient. A principal disadvantage arises because the peripheral velocity of the axial field intercepting the radially oriented armature conductors declines from a maximum value at the outermost extent of these conductors to a lesser value at their innermost portions. Hence the contribution to voltage induction by the field at the inner portions of the machine is less than that at the outermost station. In contrast to this is the radial flux configuration where all portions of the field make an equally effective impact on voltage induction. As an example of this disadvantage is that found by Chertok and Lucas [14] where it was found that the cost/power ratio for a PM axial-field 100-kW direct-drive generator was approximately 20% higher than that for a radial flux design using the same NdFeB magnet material. Total weight of the packaged radial field version was 9% greater than that of the radial version.

The transversal flux machine, which appears to have been conceived by Weh et al. [16–18], is a relatively new and highly innovative electrical machine concept. Figure 3 depicts a cross-sectional view of the double gap, two-phase configuration proposed by Weh et al. and an isometric detail of the flux focusing field magnet structure.

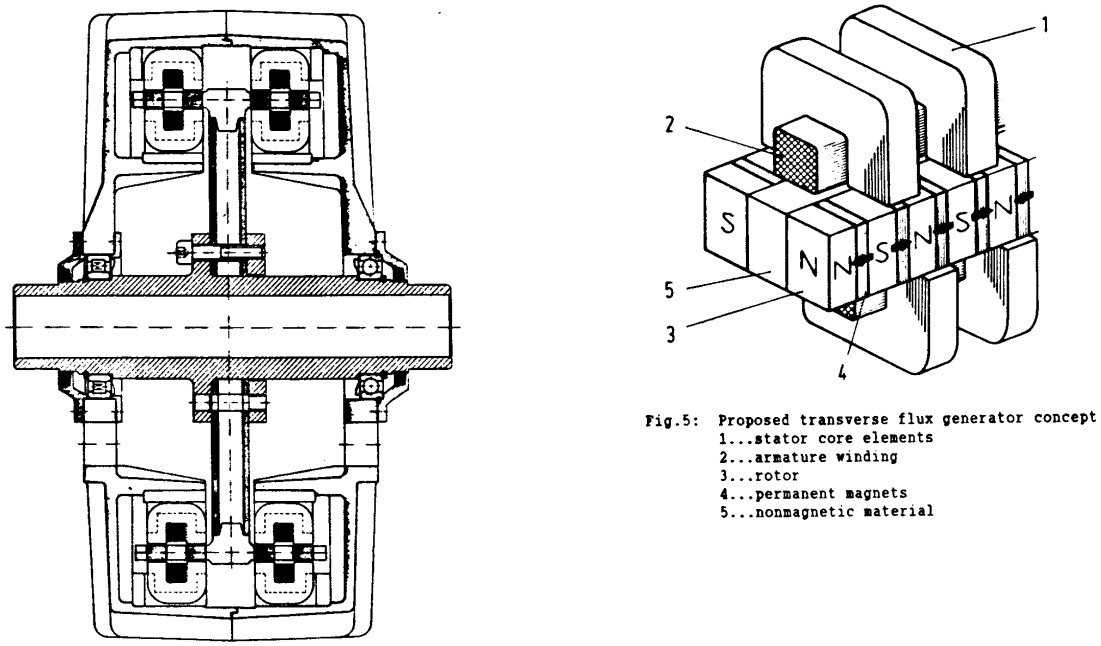

Figure 3. Double gap, two phase transversal generator proposed by Weh et al.

Weh et al point out that the field magnet structure may also be in the form of a disk rather than the cylindrical structure depicted in Figure 3.

A somewhat simpler single gap version of a transversal flux machine configured for three phases is reported at http://www.iem.rwth-aachen.de/html_e/for_nmat.html and shown in Figure 4.

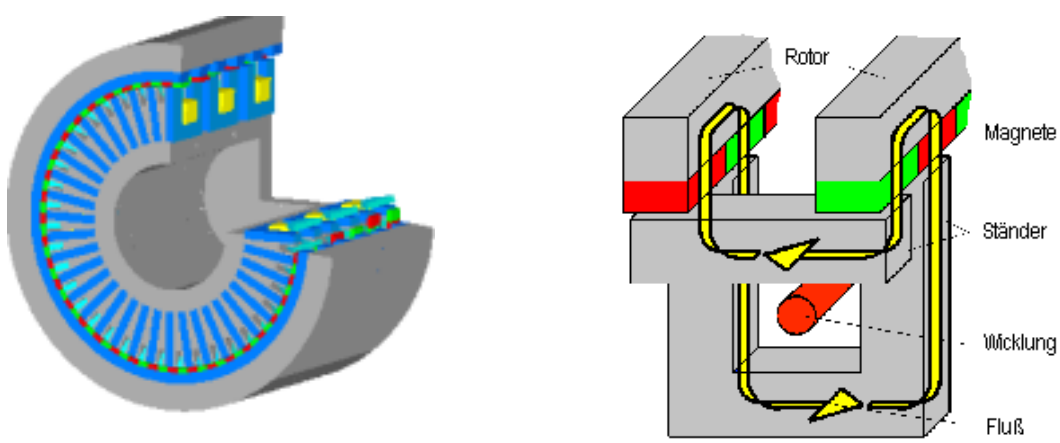

Figure 4. Single-sided, three-phase transversal flux machine

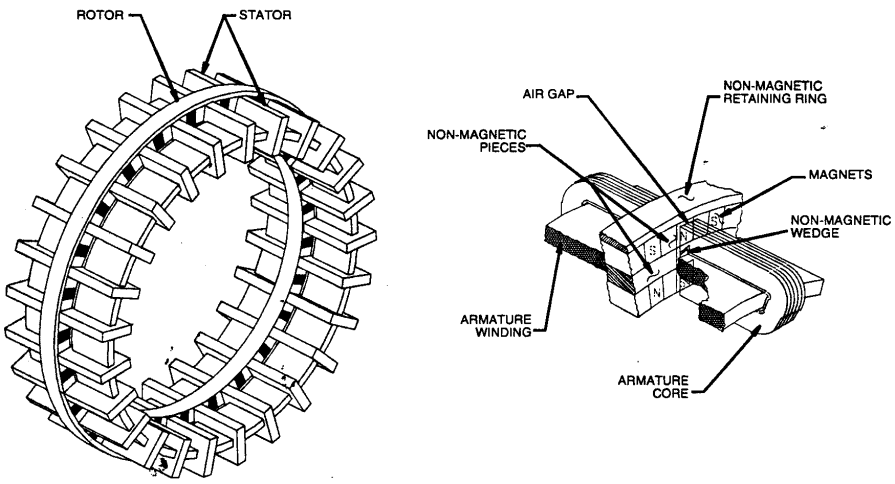

Figure 5. Transverse flux generator considered by Heffernan

Heffernan et al. [8] identify a so-called axial field machine but the illustration of this design, shown in Figure 5, appears to be the disk form of the machine proposed by Weh et al. The flux path of this design is toroidal with respect to the path of armature current, which is the distinguishing characteristic of the transverse flux machine.

Investigators believe the transveral flux machine can offer a significant weight and size advantage but this configuration may have important shortcomings:

- Low power factor due to large armature leakage fields
- High torque/weight performance is enabled by use of relatively small pole pitch and consequently the mechanical air gap dimension must also be small—a requirement that may be difficult to achieve in a very large diameter direct-drive wind turbine generator

The construction of a transversal flux machine is complex because two air gap surfaces are necessary as shown in Figure 3 to achieve a very high torque density. Single-sided versions have been developed such as the three-section, three-phase unit depicted in Figure 4, but these produce about 30% less torque than the best double-sided designs and present a very low power factor [21]. Maddison et al. [21] have proposed an improved single sided design that employs a 3D core structure realized by the use of new powder iron composite materials.

The high torque density potential of the transverse flux machine and its modular, although complex, construction would recommend this concept for a large direct-drive wind turbine generator if its potential shortcomings can be overcome. Unfortunately the scale of designs investigated and tested so far is small—less than 10 kW—so exploitation of this concept for generator sizes envisioned by this program would entail seemingly excessive technical and programmatic risks.

Within the broad classification of radial and axial flux configurations are a host of machine types. For example, Heffernan et al. of Kennetech Windpower identified and focused on the various radial field generator architectures summarized in Table 4.

Table 4. Illustrative Radial Field Generator Architectures

Generator architecture	Variations	Note
Doubly salient permanent magnet (PM)	Single and three phase	Unconventional concept
	Ferrite or NdFeB magnets	Magnets located on the armature core
PM field synchronous	Surface NdFeB magnets	Well-established concept
	Buried ferrite or NdFeB magnets	Buried ferrite version final downselection
		Northern generator configurations IIb and IIIb
Wound field synchronous		Well-established concept
		Northern generator configurations IIa and IIIa
		Enercon direct-drive generator configuration
Squirrel cage induction		Classic design for high speed
Doubly-fed induction (brushless)	Without power converter	Brushless configuration unconventional
	With power converter	Northern baseline generator configuration I (brushed version with power converter)
Switched reluctance		Unconventional concept at this size

1.2.2 Sorting Out the Options

Clearly the most successful direct-drive generator option to date is the wound field synchronous design employed by Enercon but the focus of academic and commercial development is now clearly set on permanent magnet field synchronous machines of which more will be said below.

Less promising candidates have been sorted out by prior investigations, of which the process reported by Heffernan et al. [8] is the most comprehensive.

The squirrel cage machine was found unsuitable for a direct-drive generator because the excessive magnetizing current demand and consequent copper loss due to the high number of poles required in a large diameter, high torque, low speed machine. The investigators observed that magnetizing reactance varies inversely with the number of poles and hence the magnetizing current varies directly with pole number. As a consequence it was found that squirrel cage induction designs with 72 and 144 poles would achieve very low efficiencies of 70 and 66% respectively. The power factor of these machines was also extremely poor—0.4 with 72 poles and 0.22 with 144 poles. Low power factor would burden the generator side of the power converter with an excessive reactive current demand increasing the cost and losses of this system component. Unstated is the fact that a squirrel cage induction generator would require a relatively small air gap that may be difficult to attain in a large diameter direct-drive configuration.

Two versions of a brushless, doubly fed generator architecture were evaluated—with and without a converter—and reported unfavorable due to relatively high weight and cost of electromagnetic materials. However, aspects of the analysis provided for this machine class raise concerns:

- While the doubly fed brushed generator is a proven technology, viability of the unconventional brushless version cited is uncertain.

- Although operation of a doubly fed brushed generator with a power converter is well-understood [22], the architecture and operation of a brushless version without a converter is not explained or obvious.

- While high-speed doubly fed generators have proven advantageous and are becoming more prevalent it is not clear that even proven brushed designs—let alone brushless versions—would be successful when adapted to direct-drive operation with very high pole number. In particular, the squirrel cage induction machine "cousin" of the doubly fed generator has unfavorable efficiency and power factor in a direct-drive configuration because of excessive magnetizing current demand. It may be that a direct-drive doubly fed machine would suffer these same efficiency and power factor penalties and also negatively impact the cost and efficiency of the rotor power converter due to excessive reactive rotor current rating.

A directly driven doubly fed generator might be a promising new drivetrain concept as it would retain the advantages of the successful high-speed version—reduced power converter capacity, cost, losses and power quality impact—while enabling the benefits of a gearless design. But it should be noted that even if efficiency and power factor proved acceptable a large number of poles would be required for direct connection of the stator to a 60 Hz power system at MW-scale power level and turbine rotor speeds of 20 rpm or less (360 poles or more) must be accommodated. An encouraging fact is that very large (e.g., 230 MVA) doubly fed motor-generators are in use for pumped hydro storage plants and one reported by Sapin et al. [26] employs an 18-pole design.

Heffernan et al. also found that the switched reluctance generator architecture had unfavorable weight and cost. For example, in a comparison of 144 pole designs at the 500-kW power level these investigators found the switched reluctance generator would weigh approximately 2.5 times that of a wound field synchronous design already commercialized by Enercon. Materials required for the switched reluctance design would cost approximately twice that for the proven wound field synchronous machine. Not mentioned by the authors, is the fact that the switched reluctance generator, as in the case of the squirrel cage induction generator, would require a relatively small air gap that might be difficult to achieve.

These investigators determined that various embodiments of a so-called doubly salient permanent magnet generator were also unattractive. While initial investigations of permanent magnet transverse flux generators indicated favorable weight and cost these designs were not pursued for reasons noted below.

Hence the "downselection" processes of Heffernan and others to date favors only two architectures for a direct-drive generator in power ratings of interest: wound field synchronous and permanent magnet synchronous.

Table 5 reports preliminary estimates of electromagnetic (EM) material weight and cost for seven permanent magnet (PM) synchronous generator concepts considered by Heffernan et al. [8] normalized to estimates of weight and cost for the proven direct-drive wound rotor synchronous generator. All of these radial field designs achieve an efficiency of 93%. Efficiency is not stated for the transverse flux designs and hence the weight and cost comparisons may not be valid.

Table 5. Weight and Materials Cost for Favorable Generators

Generator configuration	Material weight (lb)	Material cost ($)
144 pole wound field synchronous—baseline for PM relative weights and costs	6,700	3,600
144 pole radial flux PM—buried ferrite magnet	0.97	1.03
144 pole radial flux PM—buried rare earth (NdFeB) magnet	0.96	2.71
144 pole radial flux PM—surface ferrite magnet	1.32	1.38
144 pole radial flux PM—surface NdFeB magnet	0.98	2.64
48 pole transverse flux PM -- ferrite magnet (Weh [17])	0.80	1.07
58 pole transverse flux PM—NdFeB magnet (Weh [17])	0.56	1.73
96 pole transverse flux PM—ferrite magnet? (identified as axial field)	0.50	0.76

Heffernan et al. concluded that from a cost, size and weight perspective the buried ferrite magnet design was most suitable notwithstanding the negligible differences in weight and cost relative to the proven wound field synchronous generator. This design is the same as that presented to the team by General Dynamics at the kickoff meeting except for the use of ferrite rather than NdFeB magnet material The noteworthy advantages of the 96-pole transverse flux generator were acknowledged, but this design was considered a new and untested concept and concern was expressed about the structural integrity of the disklike PM field structure. Moreover, tools for analysis of its 3D field and current distributions were not available.

1.3 Exploiting Advanced and Traditional Generator Concepts

Mecrow, Jack, and others at the University of Newcastle Upon Tyne have been investigating new electrical machine configurations enabled by the use of composite core materials fabricated from iron powders not unlike those widely used in the manufacture of sintered mechanical components [19–21]. These include designs with complex claw pole armatures requiring low loss cores not previously manufacturable with traditional laminations. Variations of these claw pole armature designs are similar to transverse flux configurations and prototypes exhibit very high weight-specific torque capability. However, the scale of present prototypes is too small to provide confidence of applicability to direct-drive MW-scale wind generators.

Spooner and Williamson [9] have explored buried and surface magnet radial field PM wind turbine generators with a very low ratio of armature core slots per pole per phase (SPP). Conventional low pole number high-speed induction or synchronous generators employ so-called integer slot windings where SPP might be as high as 6. Some low speed PM machines such as that proposed by Grauers [13] or the General Dynamics motor described at the kickoff meeting have SPP = 1. Spooner and Williamson considered fractional slot windings with even lower values of SPP (e.g., about one third) at which point it is possible to wind the armature with coils spanning only one slot pitch. This enables segmentation of the armature structure into modules that can facilitate more economical manufacture and shipment of a large diameter generator in manageable subunits. Moreover, the single slot pitch coils avoid overlapping end turns with consequent reduction of copper mass, cost and especially losses. Single-slot pitch windings have been widely used in PM brushless DC and synchronous motors for computer disk drives and industrial servo applications. However, adoption of this configuration for a generator application must take into consideration that a very low SPP winding distribution may develop subharmonic armature magnetomotive force (MMF) components, which increase the synchronous reactance and might thus limit power delivery capability. Augmentation of synchronous reactance is sensitive to small changes in SPP and care must therefore be taken to assess the subharmonic content and its impact. With appropriate design the generator side of the power converter may be able to suppress this reactance limiting effect.

It is curious that Heffernan, Grauers, and others who have extensively investigated the design of large PM generators do not report consideration of fractional slot windings considering that this technique has been advantageously used in high pole number machines such as hydroelectric station generators for 50 years or more. However, examination of illustrations in Dahlgren [6] indicate that ABB has employed a fractional slot winding design in at least one of their new PM direct-drive wind turbine generators.

The salient advantage of the fractional slot winding—even if SPP is not so small as to achieve single slot pitch coils—is that fewer, wider slots are required to achieve the desired sinusoidal distribution of mmf along air gap circumference. Wider slots enable a higher copper fill factor and lower copper loss since slot insulation occupies a smaller fraction of the slot cross-sectional area. Perhaps one reason that fractional slot windings are not considered is that procedures for their design may not be readily available.

1.4 Promising Concepts

The review of recent advances in drivetrain technology described above and the assessment of buyer preference trends discussed below strongly supports direct drive as a preferred solution provided any cost premium can be largely offset by productivity and operating cost advantages. Designs with smaller power ratings (e.g., 600–750 kW) more readily accommodated by direct-drive generators of reasonable proportions may be acceptable or in fact preferred for land-based installations in the United States.

Unfortunately, only one report of investigations directed at improving gearbox reliability could be located [3] and this document revealed no details regarding this work. Hence the prospects for significantly reducing the relatively high incidence of gearbox failures in a cost-effective fashion

remain uncertain. While the advance of gearbox technology appears to be at a standstill numerous academic and commercial efforts are underway to develop cost-effective direct-drive solutions.

The findings of this review suggest consideration of the following concepts as elements of a cost-effective direct-drive generator solution achieveable with acceptable development risk:

- Radial field, buried ferrite magnet PM synchronous generator—internal or external rotor
- Fractional slot windings to enable fewer, wider slots with higher copper fill factor
- Fractional slot armature windings with SPP < 1 to improve slot fill factor, reduce size, weight and cost and possibly achieve non-overlapping single slot pitch coils thereby enabling armature modularity
- Power converter with controlled rectifier enforcing armature current to lead terminal voltage and maintain terminal voltage = internal EMF.

Investigation of the feasibility of a doubly fed direct-drive generator is also suggested. It is conceivable that the size, weight, and cost of such a machine should be comparable to a direct-drive wound field synchronous generator such as that employed by Enercon. If this supposition is valid and no significant excitation current penalties emerge then this approach would offer the advantage of a lower capacity, lower cost power converter.

Transverse flux PM machines have the potential for smaller size, lower weight, and lower material cost than radial field configurations. However, machines of this type have not been demonstrated at relevant sizes and the budget and the schedule of the present program do not provide the necessary opportunity for staged development and testing of this architecture to evaluate its potential benefits and shortcomings. It is unfortunate, that for this same reason previous investigators such as Heffernan et al. [8] and Grauers [13] did not pursue this innovative concept.

It is of interest at this point to compare the projections made by various investigators for a common direct-drive axial field PM generator configuration. Data is available to make this comparison for the case of 500 kW-class, surface magnet design employing high-energy NdFeB magnets.

These findings are presented below in Table 6 for designs reported by Heffernan et al. [8], Lampola [12], Grauers [13], and Chertok and Lucas [14].

Table 6. Comparison of 500 kW–class Radial Field Surface Magnet PM Generators

Characteristic	Heffernan et al.	Lampola[1]	Grauers	Chertok and Lucas
Poles	72	170	100	80
Slots/Pole/Phase (SPP)	1.0	0.5	1.0	1.5
Rated speed (rpm)	50	35	32	42
Rated torque (lb-ft)	70,200	119,000	110,000	83,600
Total EM material weight (lb)	8,800	4,100	5,930	4,140
Rated torque/EM weight (lb-ft / lb)	8.0	29.0	18.6	20.2
Stator core weight (lb)	7,200	na	3,000	2,300
Copper weight (lb)	1,500	na	1,700	1,200
Magnet weight (lb)	132	na	270	190
Stator core OD (ft)	7.0	na	na	7.9
Air gap diameter (ft)	5.9	7.0	7.1	7.4
Air gap width (in)	0.17	na	0.085	0.120
Stator stack length (ft)	0.9	na	1.8	1.3
Conductor current density (A/cm^2)	~430	na	360	500
Copper loss (W)	na	na	22,700	31,500
Iron loss (W)	na	na	2,700	880
Magnet loss (W)	na	na	780	na
Rated power efficiency (%)	0.88	96.0	94.2	93.5

The weight and cost of electromagnetics are typically in approximate proportion to machine torque capacity. Hence it is of interest to note the torque/weight ratio reported for the four designs considered by Table 6. The much lower torque/weight performance of the design reported by Heffernan is surprising, especially considering its relatively low efficiency. One possible explanation is that the Grauers and Chertok and Lucas data consider only the minimum stator core material required to carry the armature flux in the back iron region. This is likely true of the design reported by Lampola. For these high pole number designs with relatively small pole pitch, this minimal back iron radial width may be too small to provide adequate mechanical rigidity to the overall assembly and assure maintenance of the air gap clearance. The much greater stator core weight reported by Heffernan may be due to inclusion of additional backiron width to provide necessary mechanical stiffness. Heffernan conducted a dimensional tolerance analysis which recommended a minimum design air gap dimension of 0.170 inches, which is twice that proposed by Grauers and 1.4 times that assumed by Chertok and Lucas.

[1]Data reported by Lampola is for a design by Spooner (1992).

2 Component and Material Advances

2.1 Doubly Fed Generator Brush System

Brush maintenance has been viewed as a significant shortcoming of the otherwise highly advantageous doubly fed generator concept. Heffernan et al. discounted the brushed doubly fed generator option in their direct-drive investigation for this reason. The same concern caused others at Kenetech to abandoned consideration of the doubly fed generator for the gear-driven 33 MVS variable speed wind turbine developed and fielded between 1986 and 1992.

As noted above, Siemens and SGL Carbon have recently announced a new brush-slip ring system for the doubly fed generator claimed to significantly reduce maintenance effort and cost [27,28].

2.2 Neodymium Iron Boron Magnets

The growing demand for high energy product neodymium iron boron (NdFeB) magnets for established and new applications such as computer disk drives, industrial servo motors and hybrid vehicle drives has resulted in performance enhancements and cost reductions.

Although Heffernan et al. reported only a modest generator weight saving by the use of high-energy NdFeB magnets rather than lower performance ferrite units Grauers and Chertok and Lucas favored use of NdFeB material. At this point the choice of magnet material is uncertain but the downward trend of NdFeB cost will certainly promote consideration of this material.

References

Wind turbine technology advancement

[1] De Vries, E. "A Turn for the Better? Innovative Concepts for Wind Turbines." *Renewable Energy World On-Line.* http://www.jxj.com/magsandj/rew/2001_02/turn_better.html.

[2] Jones, J. "Coming of the Giants—Are There Limits to the Size of Wind Turbines?" *Renewable Energy World On-Line.* http://www.jxj.com/magsandj/rew/1999_01/coming_of_giants.html.

[3] Rahlf, U.; Osthorst, R.; Gobel, W. "Bearing Overload Caused by Imprecise Definition of Connective Stiffnesses." DEWEK 1998. http://www.aerodyn.de/eng/bearing_over.htm.

Direct drive versus gear drive

[4] Bohmeke, G.; Boldt, R. "Direct Drive, Geared Drive, Intermediate Solutions—Comparison of Design Features and Operating Economics." Investigation by Aerodyn and LDW/AEG. (Report requested.) http://www.aerodyn.de/eng/drive.htm (abstract).

Direct drive generator

[5] Veltman, A.T. et al. "Cost Performance of Direct Drive Wind Turbine Generators." Investigation by ECN Renewable Energy, Delft Technical University and KEMA, Arnhem Netherlands. http://www.ecn.nl/library/reports/1996e/rx96027.html (abstract).

[6] Dahlgren, M. et al. "Windformer™—Wind power goes large-scale." ABB. http://www.abb.com/global/ABBZH/ABBZH289.NSF/viewunid/237B180DFEC3D466C12569D700437358/$file/ABB+Review+2.PDF.

[7] Leijon, M. et al. "Powerformer™: Electric Power Generation for the Twenty-First Century." http://www.nemesis.at/publication/gpi_99_2/articles/abb.html.

[8] Heffernan, R. et al. "Direct-Drive Wind Turbine Feasibility Study." Final report to Electric Power Research Institute. TR-104911, Research Project 1590-07. April 1996.

[9] Spooner, E.; Williamson, A.C. "Permanent Magnet Generators for Wind Turbine Applications." *IEEE Proceedings of Electrical Power Applications* 1996;143(1):1–8.

[10] Fuchs, E.F.; Fardoun, A.A.; Carlin, P.W.; Erickson, R.W. "Permanent-Magnet Machines for Operation with Large Speed Variations." *Proceedings of Windpower, 1992.* Seattle, Washinton, 1992.

[11] Fardoun, A.A.; Fuchs, E.F.; Carlin, P.W. "A Variable-Speed, Direct-Drive Transmission Wind Power Plant." Report provided to A. Chertok by E. Mujadi, NREL. November 1994.

[12] Lampola, P. “Directly Driven Wind Generators.” Goteborg, Sweden: Chalmers University of Technology; 1994.

[13] Grauers, A. “Design of Direct-Driven Permanent-Magnet Generators for Wind Turbines.” Technical Report No. 292. Goteborg, Sweden: Chalmers University of Technology; 1994. (PhD thesis).

[14] Chertok, A.; Lucas, E. “Development of a Direct-Drive Generator System for Utility-Scale Wind Turbines.” Preliminary Design Review Report. NREL Subcontract ZAA-4-12272-01. Certek Corporation; 1994.

[15] Chertok, A.; Lucas, E. “Technical Proposal for Advanced Wind Turbine Next Generation Turbine Development Project.” Concept Development Report. NREL Subcontract AAA-5-13320-04. Certek Corporation; 1995.

Transversal flux and related advanced motor and generator technology

[16] Weh, H. et al. “Directly-Driven Permanent-Magnet Excited Synchronous Generator for Variable Speed Operation.” ECWEC Conference. Denmark: Technical Institute of Braunschweig; 1988.

[17] Weh, H.; May, H. “Achievable Force Densities for Permanent Magnet Excited Machines in New Configurations.” ICEM. Munich: Technical Institute of Braunschweig; 1988.

[18] Weh, H.; Hoffmann, H. “New Permanent Magnet Excited Synchronous Machine with High Efficiency at Low Speeds.” ICEM. Munich: Technical Institute of Braunschweig; 1988.

[19] Mecrow, B.C. et al. “Permanent Magnet Machines with Soft Magnetic Composite Stators.” Newcastle: University of Newcastle upon Tyne.

[20] Mecrow, B.C. et al. “Permanent Magnet Machines for High Torque, Low Speed Applications.” Newcastle: University of Newcastle upon Tyne.

[21] Maddison, C.P. et al. “Claw Pole Generators for High Performance Transverse Flux Machines.” Newcastle: University of Newcastle upon Tyne.

Other generator technology

[22] Carlin, P.W.; Laxson, A.S.; Muljadi, E.B. “The History and State of the Art of Variable-Speed Wind Turbine Technology.” NREL/TP-500-28607. http://www.nrel.gov/docs/fy01osti/27066.pdf.

[23] Weigand, C.H.; Lauw, H.K.; Marckx, D.A. “Variable-Speed Generation Subsystem using the Doubly Fed Generator.” NREL/SR-500-27066. http://www.nrel.gov/docs/fy01osti/27066.pdf.

[24] Liwschitz-Garik; Whipple. *AC Machines*. In: *Electric Machinery*. Volume II. Van Nostrand; 1946.

[25] Lipo, T.A. *Introduction to AC Machine Design*. Volume 1. University of Wisconsin: Wisconsin Power Electronics Research Center; 1996.

[26] Sapin, A.; Hodder, A.; Simond, J. J. "Doubly-Fed Asynchronous Machine with 3-Level VSI for Variable Speed Pump Storage." http://lemewww.epfl.ch/ME/publications/2000/varspeed_2000.pdf.

Component and material advances

[27] Siemens. "New Slip-ring Technology for Generators." *Wind Kraft Journal*. August 2001. p. 44.

[28] SGL Carbon AG. "Thirty Times Less Wear Thanks to New Slip-Ring Technology." http://www.sglcarbon.com/sg/news/n3/.

Other

[29] Florida Power and Light. Personal communication, May 2002

Appendix F:
Power Converter Technology

Northern Power Systems
Waitsfield, VT 05673
(802) 496-2955

Table of Contents

1 Prior Drivetrain Studies 1
1.1 Power Converter 1
1.1.1 Rectifier Interface with Generator 1
1.1.2 Inverter Interface with Utility 3
2 Component and Material Advances 4
2.1 Power Electronic Building Blocks 4
3 References 4

The WindPACT drivetrain study does not include power converter R&D. However, the trends in the power converter technology can have a large impact on the drivetrain option selected for the wind turbine.

The present investigation of wind turbine drivetrain alternatives can benefit from lessons learned by others reported in technical or trade literature. To this end a Technology Assessment has been conducted at the outset of the project to identify concepts, data, trends or other information that might assist this work.

Subject areas of this assessment are summarized in Table 1.

Table 1. Technology Assessment Topics

Section	Topic
Prior drivetrain studies	Power converters
Component and material advances	Power electronics

Reports of on-going or prior drivetrain studies and other sources relevant to these topics have been identified and reviewed. Salient findings of these investigations and trends observed by this review are summarized in the discussion that follows.

1 Prior Drivetrain Studies

Grauers's doctoral thesis [1] provides one of the most comprehensive investigations of direct-drive designs and comparisons with competing gear driven high-speed induction generators. Exhibit 1.1 presents a comparison of these alternatives as evaluated by Grauers. Of particular interest is that Grauers has invested much effort in analyzing the annual average efficiency as a function of site wind speed distribution. He found a small efficiency advantage on this basis for the direct-drive approach, even though the direct drive is burdened with additional losses due to power conversion. Rated power efficiency is lower for the direct-drive solution but has no relevance to annual energy production. A significant portion of annual energy production occurs at intermediate power levels, where the direct drive has higher efficiency.

1.1 Power Converter

1.1.1 Rectifier Interface with Generator

As mentioned previously, high synchronous reactance can constrain output power capability of a PM generator. The achieved output may thus be less than that otherwise governed by the generator internal electromotive force (EMF) and current capacity at design temperature rise. The degree of power limitation is determined by the rectifier circuit, which the power converter provides to convert variable frequency generator output to an intermediate DC form. This subject is considered by Grauers [1] and Fuchs et al. [2]. Grauers's comprehensive and lucid explanation is that there are two major types of rectifier circuits used for this purpose: an uncontrolled diode bridge and a

controlled switch (e.g., IGBT) bridge.[1] The uncontrolled diode rectifier is simpler, cheaper, and more efficient. However, it cannot control the current phase angle and, if the generator reactance is high, the potential generator power output capacity will not be realized. On the other hand, the controlled switching rectifier, employing pulse width modulation, can supply the generator with reactive power and, therefore, the phase angle between the current and the internal EMF can be maintained at a value, which avoids limitation of output power due to a high reactance.

Grauers describes four control policies, which determine the generator terminal voltage, armature kVA rating, and rectifier kVA rating, for a switching rectifier:

1. Maintain armature current in phase with terminal voltage (i.e., maximize terminal power factor)

   This policy does not maximize generator power output because the terminal voltage must be lower than the internal EMF. Since the generator armature and rectifier must be rated to accommodate the no-load EMF, which is higher than the terminal voltage at rated load, the required kVA ratings are higher than necessary.

2. Force armature current to lead terminal voltage to maintain terminal voltage = internal EMF

   This method can increase the generator and rectifier active power output compared with the control policy 1, and it avoids oversizing of armature and rectifier kVA ratings.

3. Maintain armature current in phase with internal EMF

   The advantage here is that required internal emf is reduced and hence less magnet material is needed than for control policy 2 and no-load core losses are reduced. The stator flux is augmented by supplying reactive power to the armature only at high loads. A shortcoming is that generator output is not maximized as it is by control policy 2.

4. Maintain armature current to maintain maximum torque per ampere of stator current and then to transition over to limiting the maximum generator terminal voltage [4,5].

Grauers selected policy 2 as it permits a lower generator and rectifier kVA rating. Policy 4 can be used to optimally utilize the generator and power converter over the entire speed range of the wind turbine and is a preferred option.

Another advantage of the controlled rectifier solution is that it can boost output voltage to stabilize the internal dc link voltage as generator speed varies.

[1]"Control" implies the control typically provided by a microcomputer or digital signal processor (DSP). To be precise, conduction of the "uncontrolled" rectifier diodes is still controlled or "machine-commutated" by the state of the generator output voltage. The "controlled" rectifier alternative also is said to be "forced-commutated" because conduction of its switches is determined or forced by the microcomputer or DSP.

In light of the preceding observations, it is curious that the Windformer cable wound PM generator system under development by ABB proposes use of a passive rectifier. In the multi-unit ocean-based systems described by Dalhgren [3], each turbine would be provided with an uptower uncontrolled rectifier immediately adjacent to the generator. High-voltage DC rectifier output power would be carried down tower via pendant cables and then delivered to a sub-sea power collection network. The aggregate power output of a turbine group delivered by this common DC link would be then inverted to AC at utility frequency. Dalhgren proposes that the speed of the turbine group would be controlled by adjusting the DC link voltage. This group control approach might realize some productivity gain by matching turbine speed to windspeed if it can be assumed that in a sea-based setting there is little variability of average windspeed from tower to tower. Even so, this group speed control policy cannot provide the advantage of rapid generator torque limiting to relieve stresses in turbulent conditions.

1.1.2 Inverter Interface with Utility

Kennetech Windpower (formerly U.S. Windpower) obtained United States patent protection for a current-controlled inverter it developed between 1988 and 1992. The claimed inverter control policy forces the injected line current to instantaneously follow a sinusoidal "template" waveform derived from the utility line voltage. The inverter is hence considered to be a *current* source. It is claimed that the phase of this template may be adjusted with respect to the line voltage so as to control the phase of the injected current and hence the magnitude and direction of reactive power flow. Template current control also assures that the inverter output will be in exact synchronism with the utility voltage even as its frequency drifts as it does over a very small range. It is further claimed that reactive power can be delivered even when the turbine is not operating and hence it can serve as a static VAR compensator (SVC) (e.g., to source lagging kVAR to the utility network and thereby offset the lagging kVAR demands of customer loads and transmission or distribution apparatus). While these control policies were likely employed in other applications (e.g., photovoltaic inverters or SVCs) prior to the patent filing the scope of the allowed claims was limited to the use of a current controlled inverter with a wind turbine.

The claimed template control of inverter output current is highly advantageous and non-infringing alternatives may not be readily conceived. Perhaps one possibility would be control of the inverter as a *voltage* source with voltage waveform enforced to follow a sinusoidal template synthesized by the inverter DSP and phase-locked to the line voltage. Power flow would be controlled by adjusting the inverter output voltage and phase in the much the same fashion as accomplished by field excitation adjustment of a conventional synchronous generator.

For now the Kennetech patents, presently owned by General Electric, will continue to inhibit import into the United States of variable speed wind turbines such as the Enercon and Lagerwey direct-drive units and geared Vestas machines. Northern Power Systems and other U.S. manufacturers may seek to negotiate licenses with General Electric to use the patented inverter concepts or perhaps find non-infringing alternatives that can serve until the patents expire circa 2010.

2 Component and Material Advances

2.1 Power Electronic Building Blocks

The development and manufacture of power converters for early-stage variable-speed utility-scale wind turbines, such as the Kennetech and Enercon units, involved the laborious design, assembly, and testing of complex IGBT control and protection circuits, current and voltage sensors, IGBT modules, bus capacitors, laminated low-inductance DC link bus work, heatsinks, and fans. Today, fully specified and tested power electronic building block (PEBB) subassemblies that include all of these elements can be purchased as standard or customized items from several manufacturers. Semikron is the leading supplier and offers a wide range of products with voltage and current ratings suitable for converters into the low MW range. Other vendors, such as Powerex and Eupec, are developing inverter assemblies using intelligent power modules, which greatly simplify design and development of power converters for wind turbines.

3 References

[1] Grauers, A. "Design of Direct-Driven Permanent-Magnet Generators for Wind Turbines." Technical Report No. 292. Goteborg, Sweden: Chalmers University of Technology; 1994. (PhD thesis).

[2] Fuchs, E.F.; Fardoun, A.A.; Carlin, P.W.; Erickson, R.W. "Permanent-Magnet Machines for Operation with Large Speed Variations." *Proceedings of Windpower, 1992.* Seattle, Washinton, 1992.

[3] Dahlgren, M. et al. "Windformer™—Wind power goes large-scale." ABB. http://www.abb.com/global/ABBZH/ABBZH289.NSF/viewunid/237B180DFEC3D466C12569D700437358/$file/ABB+Review+2.PDF.

[4] Hendershot, J.; Miller, T. "Design of Brushless Permanent Magent Motors" Oxford Science Publications; 1994.

[5] Morimoto, S.; Sanada, M.; Takeda, Y. "Wide-speed Operation of Interior Permanent Magnet Synchronous Motors with High-performance Current Regulator." *IEEE Transactions on Industry Applications* 1994;30(4).

Appendix G: Cost and Availability of Neodymium Iron Boron Magnets for PM Generator Applications

Northern Power Systems
Waitsfield, VT 05673
(802) 496-2955

Table of Contents

1 Introduction 1

2 Choice of Magnet Type 1

2.1 Availability/Cost 1

2.2 Magnet Stability/Physical Properties 2

2.3 Demagnetization Temperature Limitations 3

3 Cost 3

4 Corrosion 4

5 Forming Techniques 4

6 Magnet Grade 5

7 Magnetizing 5

8 Market Issues 5

9 Conclusion 7

1 Introduction

The purpose of this investigation was to determine market price, relevant factors, and available grades of neodymium iron boron (NdFeB) magnets. In addition, the cost of machinery used to magnetize the permanent magnets was researched. These magnets are a major cost consideration for the direct drive permanent magnet generator being considered under the 1.5 MW wind turbine study. This report contains an assessment of factors affecting cost, general issues relating to the NdFeB magnet material, magnetization, and evaluation/comparison of the vendor quotes that appeared to offer the greatest value.

2 Choice of Magnet Type

While there are a variety of commercially available magnet types, the requirements of a high performance generator design inevitably leads to the consideration of only those magnet types and grades that possess the highest energy density. This eliminates certain families of magnets, such as hard ferrites and AlNiCo types, which have energy densities about one tenth that of their rare-earth counterparts. While these lower-strength magnets are considerably less expensive, a design based on their use will contain much larger quantities of magnet material for a given power rating and the resulting machine will be larger in weight and volume. This basic fact of physics has been proven in numerous projects and studies and is an accepted principle in electromagnetic design.

For aggressive motor/generator designs, rare-earth magnets are the primary choice. Although there are a number of rare-earth types, commercial availability and competitive pricing are best for NdFeB magnets and samarium cobalt (SmCo) magnets. Both types are available in a variety of grades, shapes and sizes to meet a wide range of application needs. The trade-off between these two options can be summarized as follows.

2.1 Availability/Cost

Of the two primary choices of rare-earth magnets, SmCo magnets preceded NdFeB magnets in their development and use. After the successful development of SmCo magnets, there was concern about the availability and cost of these two principal elements. Fe is a significantly cheaper transition metal than Co, and Nd is a much more plentiful "light" rare-earth element than Sm. These factors then led to the development and wide spread commercial acceptance of NdFeB magnets.

NdFeB Materials. Neodymium is one of the most plentiful rare-earth elements, with extensive reserves worldwide. Iron is a common ore and very inexpensive. The United States and Turkey are the world's largest producers of boron. NdFeB magnets are in high demand and are now produced in large quantities. Competitive pricing pressures have led to recent 5% to 8% annualized decreases in magnet cost. Figure 1 depicts the historical trends of rare-earth magnet production and pricing in Japan, which are indicative of the worldwide trends. The currency shown is the Japanese yen. The figure includes SmCo and NdFeB magnets, large and small sizes and fabricated/unfabricated.

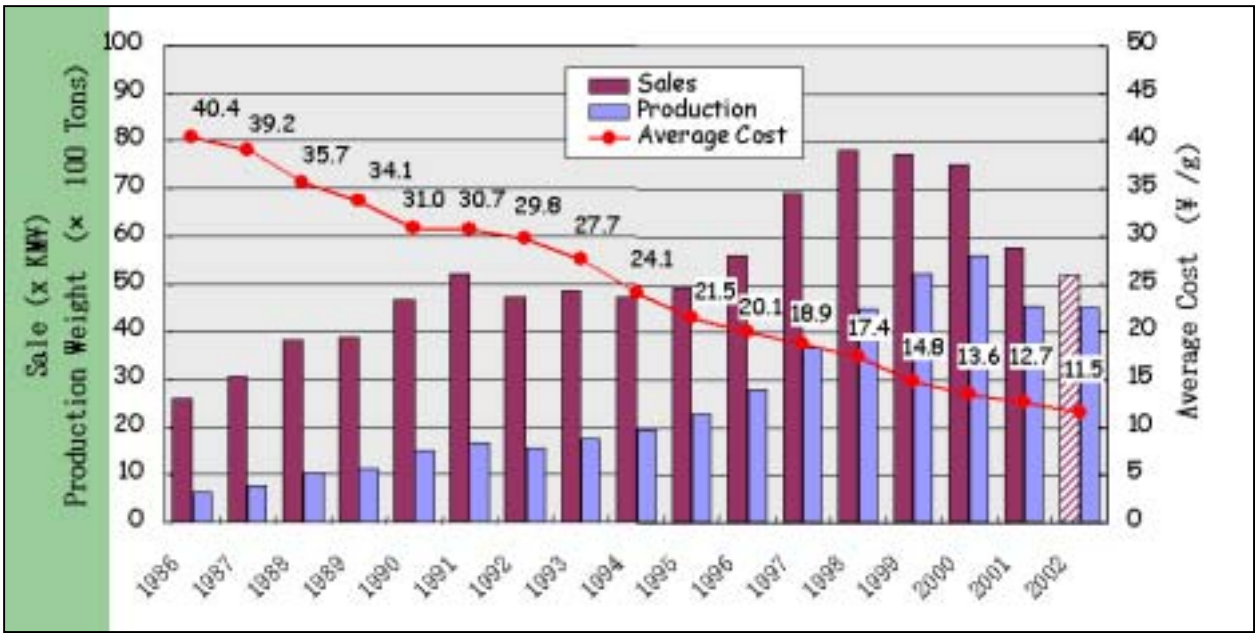

Courtesy of Shin-Etsu Magnetics

Figure 1. Rare-earth magnet cost and production trends

SmCo Materials. Samarium is considerably more rare than neodymium and in the past has been classified as a strategic element due to its limited availability. However, rare-earth demand in the last 20 years has been greatest for neodymium, primarily for use in the production of magnets, and this market demand has historically caused NdFeB to be the higher cost magnets. Increased production of neodymium and the expiration of some magnet patents have now leveled the playing field. Today, Samarium is significantly more expensive than neodymium, typically by 50% to 75% higher per pound. With regard to cobalt, although the United States uses about one third of total world consumption of cobalt, resources in the United States are low grade and production from these deposits is not economically feasible. The material is extensively imported.

2.2 Magnet Stability/Physical Properties

NdFeB Materials. NdFeB magnets have the inherent drawback that, if used in their raw, untreated form, they are susceptible to corrosion. At one time this was a major consideration in the magnet selection process. Today the magnets are routinely nickel-plated or epoxy-coated which effectively eliminates this concern. The magnets are highly stable and maintain their physical geometries under stress and loading conditions experienced in generator applications. For high rotational speeds the magnets are mounted to provide dynamic loading in known, preferential directions (i.e., in compression rather than in tension). The loads in slow-speed machines, the subject of this study, are not a concern.

SmCo Materials. SmCo magnets have some advantages but also have some significant disadvantages when compared with NdFeB magnets for use in large-scale motors and generators. Samarium is very similar to neodymium in how it is processed into magnet form. Both materials are powdered metals and are pressed under extreme pressure and then sintered, aged and machined to form shapes that are then magnetized. SmCo magnets are slightly more brittle than NdFeB magnets and have less mechanical strength. However, they are not subject to corrosion and no special coating of the finished magnet is required. Perhaps most importantly, SmCo magnets do not have the field strength of NdFeB magnets. The highest energy product SmCo magnets are in the 33 to 35 Mega Gauss Oersted (MGOe) range where NdFeB magnets are now available up to about 52 MGOe.

2.3 Demagnetization Temperature Limitations

NdFeB Materials. NdFeB magnets, from their inception, found limited application due to low potential operating temperatures. A significant improvement was then made with the discovery that the addition of boron yielded a ternary compound with strong uniaxial magnetocrystalline anisotropy, and a much-improved operating temperature. Today's commercial NdFeB magnets have many combinations of partial substitutions for Nd and Fe, leading to a wide range of available properties.

SmCo Materials. SmCo magnets have an inherently higher operating temperature range (higher curie temperatures) than NdFeB magnets without risk of demagnetization. If high heat conditions are a dominant an unavoidable design factor, SmCo magnets are usually preferred. This is not expected to be a factor in the development of large-scale generators for wind power applications.

3 Cost

Price inquiries were based on similar magnets with remnant flux densities of 1.18 tesla (T), 1.26T, and 1.13T, respectively. Prices were based on virgin alloy, 120,000 units, roughly 60 metric tons with coating and no pre-magnetization. Figure 2 shows magnet quotes.

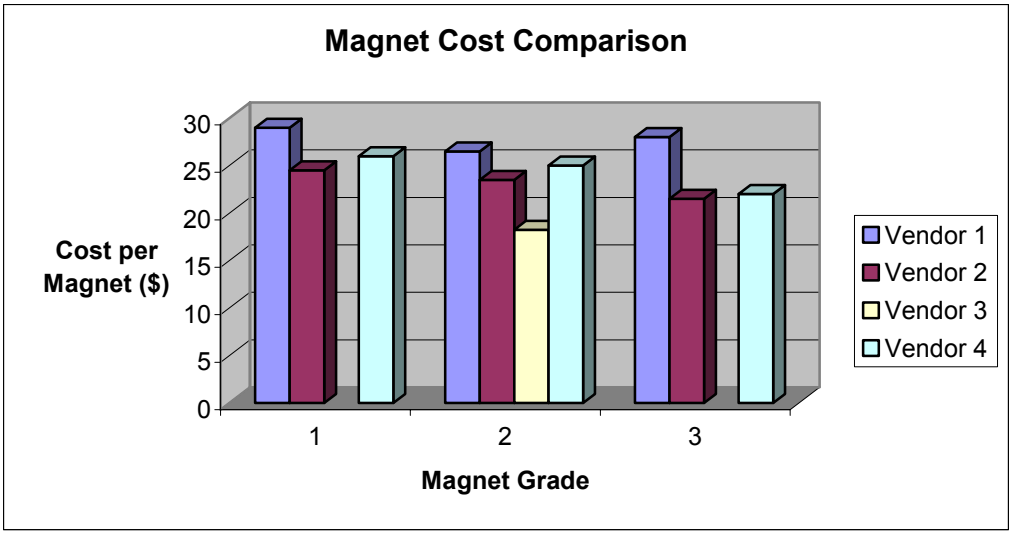

Note: Vendor 4 data was verbal and not confirmed in writing.

Figure 2. Magnet quotes

4 Corrosion

NdFeB is susceptible to advanced corrosion, similar to mild and structural grade steels (A-36 A-45). It does not form "thin film" oxide barriers that inhibit electro-chemical corrosion, as characteristic of Aluminum alloys and the stainless steels (e.g., 304, 316). A nickel plating or epoxy finish is used to inhibit corrosion for NdFeB. Unlike its competitors, one company claims to have an exclusive process for corrosion protection. It claims to utilize nano-technology to form aligned "grains" on the alloy surface to form a corrosive barrier. In this way it is similar to oxide barriers. There is ASTM salt spray testing data to substantiate the claim. Field data is not available at this time. This may be a contributing factor in the price difference in seemingly similar materials.

5 Forming Techniques

A sintering process is used under a magnetic influence to form the bar stock for the NdFeB magnets. The magnetic influence pre-aligns the material to magnify the flux of the alloy when it is magnetized. This forming, as well as the purity and material itself, determine some of the magnetic properties. Three-meter (maximum) bar-stock and shorter are available in various sizes. For this investigation we requested quotes on a standard dimension of 2” x 2” x 1” but other dimensions can be supplied without additional cost. Most vendors do not charge an additional forming and or extrusion charges for large orders (e.g., several tons). Custom radii and dimensional shapes can also be prefabricated for large orders without additional charges.

6 Magnet Grade

Based solely on empirical data, categories are given by each manufacturer. Unfortunately, there are no consistent grades. For instance, Company A's product does not perform exactly like the comparable product from Company B, but they are quite similar. Property curves for each are readily available but are formatted differently, making it difficult to compare competitors.

7 Magnetizing

NdFeB gets its magnetic properties from polarized dipoles, similar to other iron-based magnets. NdFeB is a much more effective static magnetic source because there is very little hysteresis in the material (on the molecular level). Very few dipoles reverse even when subjected to opposite magnetic fields. A permanent magnet will maintain its field strength almost indefinitely provided it is not exposed to its known Curie (or demagnetization) temperature. For state-of-the-art NdFeB magnets, this demagnetization occurs at around 350°C, which is well above the temperatures experienced in typical applications. This characteristic varies depending on manufacturing method and magnet grade.

Magnetizing NdFeB can be done similarly to ferromagnets. A cut-to-size piece or an incremental length of bar stock is sectionally placed in a machine that applies a very large magnetic field to the material (flashing). For the grades of NdFeB discussed, a 3T (Tesla) magnetizing machine would be required to achieve the published remnant. Remagnetizing or reversing an already polarized metal would require a 4T magnetizing machine. There are a range of features and sizes of machines with different capacities. The range from 3T to 4T magnetizing machines costs between US$85,000 and US$120,000.

8 Market Issues

At this time neodymium is not considered a strategic material. It is or can be mined in N. America, Asia, Australia and Africa. Eighty percent of the known mineral reserves are in China, which are the most readily extractable. Recently, Russia has begun to develop its mineral wealth in neodymium with an undisclosed reserve. The price of neodymium has gone down continuously since its introduction into magnet applications. The two largest markets for the magnets are computer data storage and automotive, which account for about 55 percent of the overall market for NdFeB product. NdFeB magnets are also used extensively in consumer electronics, medical equipment, industrial automation products. More specifically, they are used in hard-drive readers in microelectronics, ABS brake systems, pagers, cell phones and the motor/generator markets. The widening of its applications, and the Chinese government opening its mineral development to foreign investment, has increased the supply and driven the price down consistently every year. The global permanent magnet market is about $6 billion. NdFeB magnets and magnetic materials account for about $2.4 billion of the dollar share of the industry.

NdFeB is still under joint patent between the Sumitomo Corporation of Japan and the MagneQuench Corporation of USA. MagneQuench, a spin-off company from GM, made the original discovery of neodymium alloy's magnetic properties and introduced the product in 1982. Some of the relevant patents expired in the beginning of 2002. Others expire in 2007. This patent expiration will have a limited effect on price. The royalties paid for NdFeB are less than 1% of the value and there are already numerous competitors licensed in the market. The consistent, albeit gradual, downward trend in the cost of NdFeB magnets is expected to continue. At some point the price will approach the cost of the raw ore and further price reductions will not be possible without basic reductions in mining costs.

The shipment of strongly magnetized material is expensive due to the potentially dangerous nature of the material if improperly handled, especially with the amounts of materials needed in a generator core. This requires special handling in transit and safety procedures when installing or handling magnets with this energy level. Having a magnetizing machine (a "flasher") would be the most practical way to produce large quantities of generator field assemblies and also allow the materials to be shipped and handled in an un-magnetized state until time of installation. The production of large quantities of NdFeB will require time to ramp-up. Most suppliers would require 3 to 4 months lead time to reach the capacities required.

Today, only small lots of neodymium are consumed by the magnet industry, as most applications don't require large quantities of material. The magnets in computer disk drives, for example, are very small. Considering that approximately 60 tons of NdFeB would be required for 100 generator field assemblies, multisupplier procurement would be appropriate to reduce procurement risk and minimize schedule impact. The world's largest magnet production capacity is at a company that produces 60 metric tons of material per month. The order for this project would consume about 100% of the largest suppliers' capacity for one month. Of course, the order would be produced over a number of months, but the quantities are significant, and only large production houses could handle them.

There are very large deposits of Monazite sand (the raw ore). The production of rare-earth mines globally is increasing and could easily handle that level of capacity. Additional mines in China, Australia and a very large deposit in South Africa are beginning operations this year. Annual global production of NdFeB is roughly 16,000 metric tons (confirmed by two of the suppliers), expected to double in ten years (speculative market report from one prospective vendor). Therefore, a full order for 100 field assemblies would only be 0.4% of the world market. The three largest suppliers provide roughly 60% of the world market with a respective market share of approximately 20%. This lends itself to competitive price stability. Three of the four companies quoting are among the largest suppliers to the world market. Supply is expected to meet demand as usage increases.

Location of purchase doesn't appear to have a cost impact. There are foundries both in Asia and Europe where the raw ore is shipped. China has many foundries that produce NdFeB, as many as 12 according to one industry source. There are also several foundries in Japan and Europe. Bar stock of NdFeB is shipped to customers directly. Currently, there are no combined operation mining/refining companies. However, that may change with new publicly traded companies in China. New mining/refining operations may drive the price down even further. The price per ton of raw ore is US$27,000 (US$13.50 per pound), as confirmed by an Internet press release from a new mining operation in China and concurrent verbal confirmation from one company.

9 Conclusion

There are over 50 suppliers of NdFeB materials in North and South America alone. There are equally as many in Europe and Asia. There are also numerous manufacturers of magnetizing and testing equipment. A very good Internet site listing both is www.magnetweb.com. Although a preliminary NdFeB specification was used for benchmark pricing in this report, a more definitive specification has now been established which will permit more exact pricing to be ascertained.

Nevertheless, it is evident that NdFeB materials can be realized for a price much lower than the US$35 per pound previously assumed. A careful review is to be undertaken to weigh the technical trade-offs with economics. The flux performance, temperature limitations, and increase in generating potential must be weighed against the price of material. It appears as though there is an exponential increase in price for quality (BH versus T curves). At what point does the increase in magnet price for higher grade magnets become worth the associated increase in generating capacity? These questions and further investigation are needed to find the right product. However, given the products considered in this report, it is clear that a range from US$27 to US$16 is representative of the market. This price is significantly lower than just a few years ago and greatly improves the commercial viability of large-scale, permanent magnet generators.

Appendix H: Gearbox Design Study

Gear Consulting Services of Cincinnati, LLC
June 2002

Table of Contents

1 Introduction 1
2 Design parameters 2
2.1 AWEA gear and bearing life requirements 2
2.2 Gear and bearing duty cycles from Northern 2
2.3 GCSC gear sizing procedure 2
3 1.5 MW multiple output parallel shaft designs, 8:1 ratio 3
4 1.5 MW single stage planetary designs 11
4.1 Gear rating 11
5 1.5 MW baseline design, 72:1 ratio 15
6 1.5 MW parallel shaft, single helical, 20:1 ratio, six generator design 16
6.1 Gear rating 16
6.2 Bearing loads and sizing 17
6.3 Summary 18
7 1.5 MW parallel shaft, single helical, 14:1 ratio, six generator design 20
7.1 Gear rating 20
7.2 Bearing loads and sizing 21
7.3 Summary 22
8 1.5 MW 13.89:1 ratio, helical compound planetary design 23
8.1 Gear rating 23
8.2 Bearing loads and sizing 25
9 3 MW 16:1 ratio, spur and helical compound planetary design 26
9.1 Gear rating 26
9.2 Carrier bearing loads and sizing 29
9.3 Planet bearing loads and sizing 31
10 3 MW 94:1 ratio, baseline designs 34
10.1 3 MW parallel shaft, single helical, 5.88:1 ratio section 34
10.1.1 Bearing loads and sizing 35
11 Integrated bearing designs 38
11.1 Modification of baseline gearbox configuration (rotor connected to generator through gearbox) 38
11.1.1 1.5 MW power level 40
11.1.2 3 MW power level 43
11.2 Summary 45
12 Costing and weight summaries of all designs 47
12.1 Baseline gearbox design pricing: 1.5 MW, 72/1 ratio 47
12.2 Medium-speed design: single compound planetary stage 1.5 MW, 13.89/1 ratio 47
12.3 Medium-speed design: single compound planetary stage 3 MW 48
12.4 Baseline gearbox design pricing: 3 MW, 94/1 ratio 49
12.5 Single stage simple planetary designs: 1.5 MW, 8/1, 10/1, and 12/1 ratios 49
12.6 Multiple generator designs 50
12.7 Revised medium-speed design: single compound planetary weight and pricing 51
12.8 Revised single stage simple planetary designs 55
12.9 Revised multiple generator designs weights and pricing 55
12.10 Integrated bearing designs 58
Appendix A: Formulas 62
Appendix B: Static and dynamic analysis summaries 64
Appendix C: Bearing data 66
Appendix D: Engineering memos 67

Figures

Figure 1. Size comparison of all designs (cross-section) (page 1 of 2) 9
Figure 1. Size comparison of all designs (cross-section) (page 2 of 2) 10
Figure 2. Cross-section drawing 19
Figure 3. Cross-section drawing 22
Figure 4. Cross-section drawing 25
Figure 5. Spur design (cross-section)..... 32
Figure 6. Helical design (cross-section)..... 33
Figure 7. 3 MW baseline 94:1 ratio with spur compound planetary (cross-section)..... 36
Figure 8. 3 MW baseline 94:1 ratio with helical compound planetary (cross-section) 37
Figure 9. Hub coordinate system 39
Figure 10. 168000/243000 bearing arrangement (cross-section) 41
Figure 11. 277000/277000 bearing arrangement (cross-section) 43
Figure 12. 277000/183400 bearing arrangement (cross-section) 44

Tables

Table 1. Generator sizes and spacing 4
Table 2. One-generator single helical parallel shaft geometry and rating summary 5
Table 3. Two-generator single helical parallel shaft geometry and rating summary 6
Table 4. Two-generator double helical parallel shaft geometry and rating summary 6
Table 5. Three-generator single helical parallel shaft geometry and rating summary 7
Table 6. Four-generator single helical parallel shaft geometry and rating summary 7
Table 7. Six-generator single helical parallel shaft geometry and rating summary 8
Table 8. Twelve-generator single helical parallel shaft geometry and rating summary 8
Table 9. 1.5 MW, 8:1 ratio, spur planetary geometry and rating summary 11
Table 10. 1.5 MW, 8:1 ratio, helical planetary geometry and rating summary 12
Table 11. 1.5 MW, 10:1 ratio, spur planetary geometry and rating summary 12
Table 12. 1.5 MW, 10:1 ratio, helical planetary geometry and rating summary 13
Table 13. 1.5 MW, 12:1 ratio, spur planetary geometry and rating summary 13
Table 14. 1.5 MW, 12:1 ratio, helical planetary geometry and rating summary 14
Table 15. Baseline design gear life summary 15
Table 16. 1.5 MW, 20:1 ratio, single helical parallel shaft geometry and rating summary 17
Table 17. 1.5 MW, 14:1 ratio, single helical parallel shaft geometry and rating summary 20
Table 18. 1.5 MW, 13.89:1 ratio, helical compound planetary geometry and rating summary .. 24
Table 19. Planet bearings 25
Table 20. 3 MW, 16:1 ratio, spur compound planetary geometry and rating summary 27
Table 21. 3 MW, 16:1 ratio, helical compound planetary geometry and rating summary 28
Table 22. Planet bearings in spur unit 31
Table 23. Planet bearings in helical unit 31
Table 24. 3 MW, 5.88:1 ratio, single helical parallel shaft geometry and rating summary 34
Table 25. High-speed pinion shaft bearings 35
Table 26. High-speed gear shaft bearings 35
Table 27. 1.5 MW straddle mounted configuration summary 41
Table 28. 1.5 MW overhung mount configuration summary 42
Table 29. Straddle mount arrangement 44
Table 30. Overhung mount configuration summary 45
Table 32. Original duty cycle analysis—1.5 MW direct drive integrated design 46
Table 33. Current (revision D) duty cycle analysis—1.5 MW direct drive integrated design 46
Table 34. Compound planetary weight and pricing summary 49
Table 35. Single stage simple planetary weight and pricing 50
Table 36. Multiple generator parallel shaft weight and pricing summary 51
Table 37. Dollar per pound comparison for planetary gear designs 52
Table 38. Revised compound planetary weight and pricing summary 53
Table 39. Revised single stage simple planetary weight and pricing summary 55
Table 40. Dollar per pound comparison for parallel shaft designs 56
Table 41. Revised multiple generator parallel shaft weight and pricing summary 57
Table 42. Selected compound planetary pricing items 58
Table 43. Selected multiple generator parallel shaft pricing items 60

1 Introduction

This report is a summary of a gearbox design study performed to aid Northern Power Systems in meeting the goals of phase 1 of the WindPACT project. The WindPACT (Wind Partnerships for Advanced Component Technology) project was funded through the DOE in order to achieve a reduced cost of energy (COE) in wind turbines by conducting research on wind turbine components. The WindPACT objectives are to:

- Reduce the cost of wind energy through technology advancement.
- Determine the probable size range of future utility-scale turbines in the U.S.
- Evaluate advanced concepts that are necessary to achieve the WindPACT objectives.
- Identify and resolve obstacles that might block industry from embracing promising technology.
- Design, fabricate, and test selected advanced components to prove their viability.
- Support the U.S. Wind industry by transferring technology from DOE laboratories.

The goals of phase 1 are to identify the technologies and components that hold the greatest promise for improved performance and reduced cost in the US wind turbine industry. Phase 2 involves the detail design, manufacturing, and testing of the final configurations chosen after the completion of phase 1.

Northern Power Systems had initially contracted the Cincinnati Gear Company to perform the gearbox design studies required for the completion of phase 1. In February 2002, the Cincinnati Gear Company announced its intent to shut down its operations. In March 2002, Northern Power Systems contracted Gear Consulting Services of Cincinnati, LLC (GCSC) to complete phase 1 of the gearbox portion of the study.

Section 3 through 5 of this report include information supplied to GCSC by Northern Power Systems which they obtained from the Cincinnati Gear Company. GCSC has included this information in this report for reference.

The gearbox configurations include multiple generator parallel shaft designs, single stage epicyclic designs, compound planetary designs and a baseline gearbox design. These configurations were evaluated for powers of both 1.5 and 3 MW. This report details the design process for each gearbox configuration evaluated, the designs, weights and costs.

[1]NREL "Low Wind Speed Turbine Project Statement of Work – October 11, 2002."

2 Design parameters

2.1 AWEA gear and bearing life requirements

Gear and bearing life requirements used in this study were based on limits set in the latest draft (January 2002) of the AGMA/ AWEA 6006-AXX "Standard for Design and Specification of Gearboxes for Wind Turbine Generator Systems". Although it is realized this specification is still in progress, consistently applying these limits across all configurations studied will result in reliable cost comparisons of these designs.

Per this specification, gears were designed to a minimum of 175,000 hours of life per AGMA 2001-C95 using the duty cycle supplied by Northern Power Systems. The bearing lives were calculated using the basic rating life, L10, and minimum lives were held to limits set forth in Table 5-1 of the AWEA specification.

2.2 Gear and bearing duty cycles from Northern

The duty cycles used to evaluate the gear and bearing lives were developed by Northern Power Systems.

2.3 GCSC gear sizing procedure

Assumptions for generator spacing on multigenerator designs:

1. The interface for the slip ring mechanism to control the rotor blades has a 12” diameter.
2. The spacing between adjacent generators must be at least 2”.

Steps in developing multigenerator gearbox arrangement:

1. Using above assumptions for generator spacing, determine the minimum center distance for the pinion and gear.
2. Using the minimum center distance and ratio, determine the pitch diameter for the pinion and gear.
3. Using the load and face width equal to the pinion pitch diameter, calculate the K-factor and compare it to a typical allowable K-factor.
4. Selecting standard pitches, determine the options for the numbers of teeth.
5. Check the unit load for the pitch options to select the design pitch.
6. Using typical allowable K-factor and unit load values select a design face width.
7. Perform gear rating analysis to calculate the gear stresses and the gear lives for the nominal load.
8. Perform gear rating analysis using Miner's Rule to calculate the gear stresses and the gear lives using a 1.0 application factor. This assumes that the duty cycle includes any required application factors.

9. Adjust the gear geometry to get the life required.
10. Repeat steps 7 and 8.
11. Complete the bearing design for the pinion.
12. The bearing design for the gear is independent of the generator arrangement for equally spaced multiple generators.

The methods used for designing the single stage and compound planetary gearboxes are the same with exception of the concern for generator spacing. Additionally, planetary gearboxes must also meet assembly and timing requirements that were taken into account in these designs. The AGMA 2001-C95 rating standard does not calculate tooth root bending stresses on internal gears. Internal gear tooth bending stresses were evaluated as if they were external gears mating with the planet pinions which results in a conservative bending stress analysis. That bending life was then compared to assure the life was greater than the bending life of the planet pinions. Note that since several criteria are involved in the design of the gearing, calculated lives may show wide variation from gear to gear.

3 1.5 MW multiple output parallel shaft designs, 8:1 ratio

Multiple generator configurations are possible when using a parallel shaft gearbox. Several configurations were evaluated to ascertain the general cost and weight merits of using multiple generators. The parallel shaft units were initially limited to an 8:1 ratio. This is the ratio limit at which it is usually more cost effective to go to two stages of gearing. The six generator design was also evaluated for a 14:1 and 20:1 ratio (see Sections 6 and 7).

The minimum center distances determined from the generator sizes are shown in the following Table 1.

- Center Distance Number 1 is the minimum center distance for the generator and the 12" interface required for the blade pitch control mechanism.
- Center Distance Number 2 is the minimum center distance for the generator and a 42" interface required for the shrink disk which connects the gearbox input shaft to the blade rotor shaft. This center distance only needs to be considered when the generators are located on the blade end of the gearbox (i.e. 12 generator design).
- Center Distance Number 3 is the minimum center distance, which allows the multiple generators to be spaced around the bull gear with a 2.0" spacing between adjacent generators.
- The minimum center distance that can be used is the largest value of the above three calculated center distances.
- Center Distance Required for Gearing is the minimum center distance required to meet the specified gear mesh life.

For the first case shown in Table 1, the center distance required to space 12 generators is much larger than needed to transmit the torque. Instead of having 12 generators on one side, a unit was designed with 6 generators on each side. A design for gearing with 12 generators on one side was not done. Sketches showing the gearing and generator arrangements that have been considered are shown in Figure 1.

Table 1. Generator sizes and spacing

Generator				Center distance				
Rating (kW)	Diameter (inch)	# / side	Angle (deg.)	CD 1 (in.)	CD 2 (in.)	CD 3 (in.)	CD min. (in.)a	CD G (in.)b
125	26.000	12	30.000	19.000	—	55.092	55.092	—
125	26.000	6c	60.000	19.000	34.000	28.000	34.000	34.000
250	29.000	6	60.000	20.500	—	31.000	31.000	31.000
375	32.000	4	90.000	22.000	—	24.042	24.042	36.000
500	32.000	3	120.000	22.000	—	19.630	22.000	38.500
750	37.000	2	180.000	24.500	—	—	24.500	44.000
750d	37.000	2	180.000	24.500	—	—	24.500	36.000
1,500	47.000	1	360.000	29.500	—	—	29.500	57.000

aMaximum of options 1, 2, 3.
bMinimum CD required for gearing.
cTwelve generators with six on each side.
dDouble helical gearing (versus single helical gearing).
8:1 ratio, 148.8 generator speed.
Abbreviations: CD, center distance (options 1, 2, 3); deg, degree; in, inch.

Bearing sizes and costs were estimated by comparison with similar size units. Bearing lives were not specifically calculated for these units. A more detailed bearing sizing and life analysis was performed on the 14:1 and 20:1 six generator units (see Sections 6 and 7).

Gear rating. The gearsets were sized using the method described in Section 2.3. Single helical, carburized and hardened gearing was chosen for optimum performance and smallest size. The face width to pitch diameter ratio was kept to 1.0 or below. A Miner's Rule analysis was performed using the Windward 77m duty cycle and the AGMA 2001 Gear Rating standard.

Table 2. One-generator single helical parallel shaft geometry and rating summary

	Pinion	Gear
Normal diametral pitch	1.6933	
Pressure angle (degrees)	20	
Helix angle (degrees)	11.7372	
Face width (inches)	12.375	
Center distance (inches)	57.0	
Number of teeth	21	168
Pitch diameter (inches)	12.6667	101.3333
K-factor (pound per square inch)	965	
Unit load (pound per square inch)	18,407	
Durability life (hours)	581,000	4,650,000
Bending life (hours)	519,000	2,500,000

Table 3. Two-generator single helical parallel shaft geometry and rating summary

	Pinion	Gear
Normal diametral pitch	2	
Pressure angle (degrees)	20	
Helix angle (degrees)	13.6899	
Face width (inches)	9.5	
Center distance (inches)	44.0	
Number of teeth	19	152
Pitch diameter (inches)	9.7778	78.2222
K-factor (pound per square inch)	1,055	
Unit load (pound per square inch)	18,344	
Durability life (hours)	328,000	1,310,000
Bending life (hours)	948,000	1,550,000

Table 4. Two-generator double helical parallel shaft geometry and rating summary

	Pinion	Gear
Normal diametral pitch	2.5	
Pressure angle (degrees)	20	
Helix angle (degrees)	25.8419	
Face width (inches)	14.25	
Center distance (inches)	36.0	
Number of teeth	18	144
Pitch diameter (inches)	8.0	64.0
K-factor (pound per square inch)	1,051	
Unit load (pound per square inch)	18,684	
Durability life (hours)	484,000	1,940,000
Bending life (hours)	3,930,000	10,700,000

K-factor and unit load values are calculated for 1.5 MW at 18.6 rpm.
Life required by AWEA is 175,000 hours.

Table 5. Three-generator single helical parallel shaft geometry and rating summary

	Pinion	Gear
Normal diametral pitch	2.5	
Pressure angle (degrees)	20	
Helix angle (degrees)	10.9425	
Face width (inches)	8.5	
Center distance (inches)	38.5	
Number of teeth	21	168
Pitch diameter (inches)	8.5556	68.4444
K-factor (pound per square inch)	1,027	
Unit load (pound per square inch)	19,526	
Durability life (hours)	690,000	1,840,000
Bending life (hours)	840,000	1,320,000

Table 6. Four-generator single helical parallel shaft geometry and rating summary

	Pinion	Gear
Normal diametral pitch	3	
Pressure angle (degrees)	20	
Helix angle (degrees)	5.5154	
Face width (inches)	8.0	
Center distance (inches)	36.0	
Number of teeth	24	191
Pitch diameter (inches)	8.0372	63.9628
K-factor (pound per square inch)	928	
Unit load (pound per square inch)	19,876	
Durability life (hours)	1,070,000	2,140,000
Bending life (hours)	3,830,000	662,000

Table 7. Six-generator single helical parallel shaft geometry and rating summary

	Pinion	Gear
Normal diametral pitch	3	
Pressure angle (degrees)	20	
Helix angle (degrees)	13.3151	
Face width (inches)	6.75	
Center distance (inches)	31.0	
Number of teeth	20	161
Pitch diameter (inches)	6.8508	55.1492
K-factor (pound per square inch)	1,008	
Unit load (pound per square inch)	18,424	
Durability life (hours)	927,000	1,240,000
Bending life (hours)	9,600,000	6,650,000

K-factor and unit load values are calculated for 1.5 MW at 18.6 rpm.
Life required by AWEA is 175,000 hours.

Table 8. Twelve-generator single helical parallel shaft geometry and rating summary

	Pinion	Gear
Normal diametral pitch	3	
Pressure angle (degrees)	20	
Helix angle (degrees)	12.7115	
Face width (inches)	5.0	
Center distance (inches)	34.0	
Number of teeth	22	177
Pitch diameter (inches)	7.5176	60.4824
K-factor (pound per square inch)	1,130	
Unit load (pound per square inch)	22,666	
Durability life (hours)	794,000	1,060,000
Bending life (hours)	542,000	544,000

K-factor and unit load values are calculated for 1.5 MW at 18.6 rpm.
Life required by AWEA is 175,000 hours.

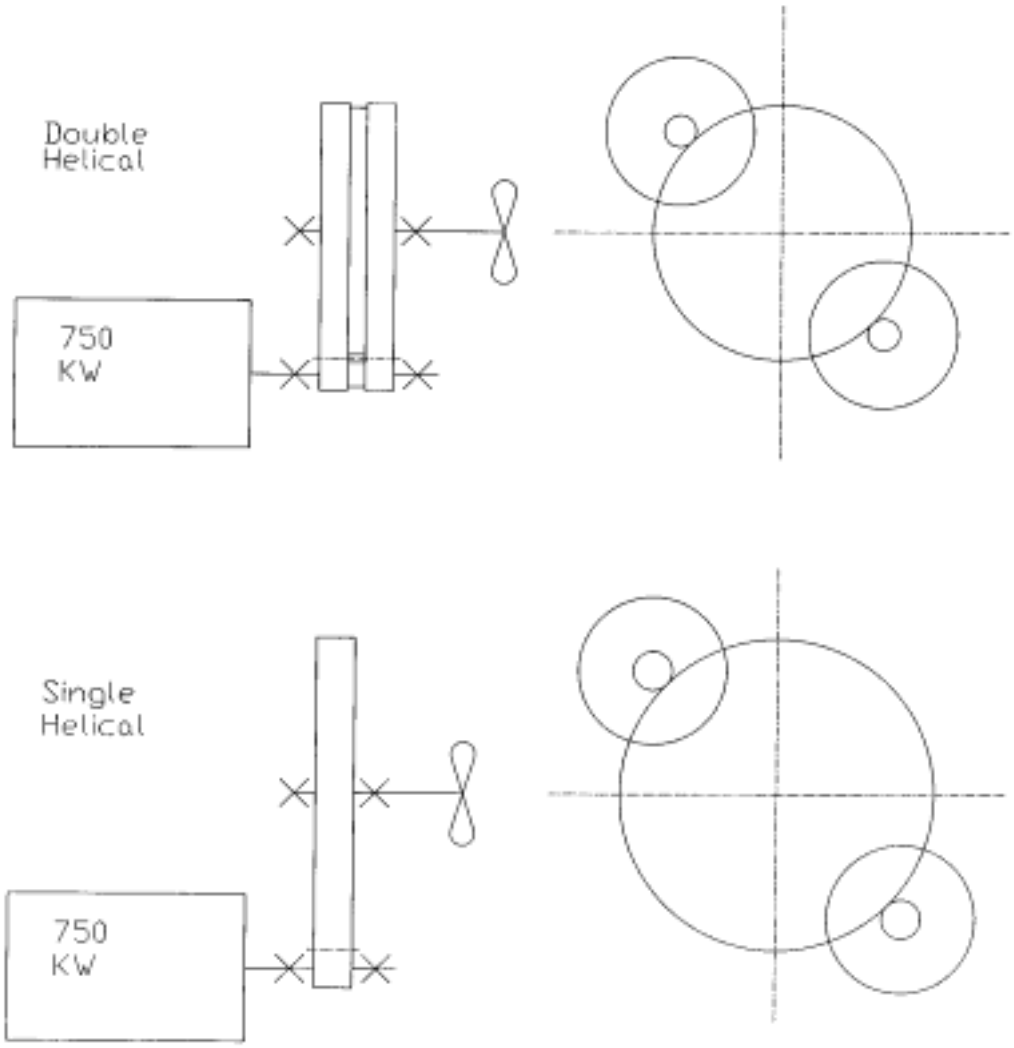

Figure 1. Size comparison of all designs (cross-section) (page 1 of 2)

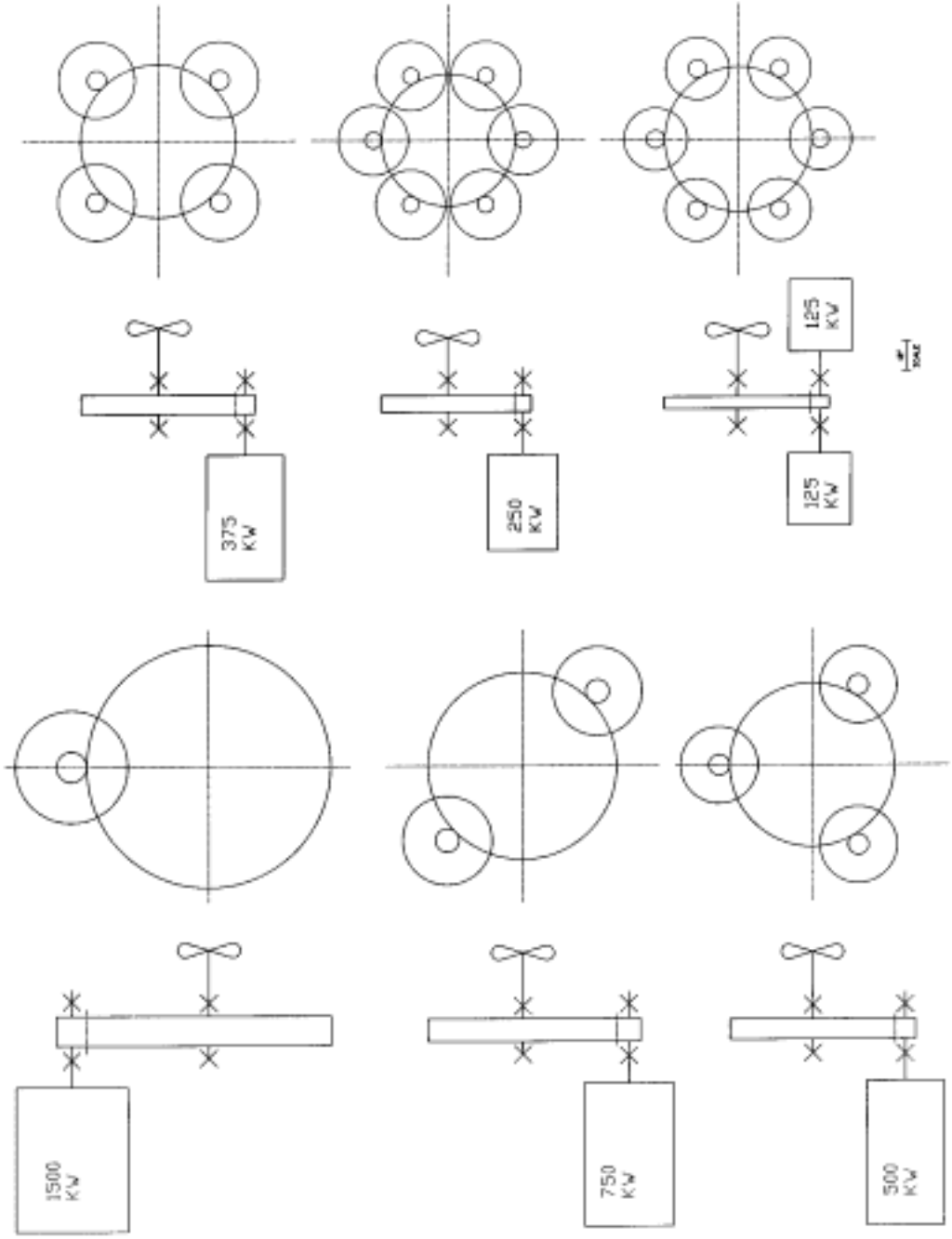

Figure 1. Size comparison of all designs (cross-section) (page 2 of 2)

4 1.5 MW single stage planetary designs

Single stage planetary designs were also evaluated for ratios of 8:1, 10:1, and 12:1 for both spur and helical gears. Bearing sizes and costs were estimated by comparison with similar size units. Bearing lives were not specifically calculated for these units.

4.1 Gear rating

The gearset was sized using the method described in Section 2.3. Carburized and hardened gearing was chosen for optimum performance and smallest size. The K-Factor and Unit Load limits were held to values that were previously shown to be acceptable. A Miner's Rule analysis was performed using the Windward 77m duty cycle and the AGMA 2001 Gear Rating standard for the sun / planet meshes only. A summary of the sun and planet ratings and life is as follows.

Table 9. 1.5 MW, 8:1 ratio, spur planetary geometry and rating summary

	Sun	Planet	Ring Gear
Normal diametral pitch	2.0		
Pressure angle (degrees)	25		
Helix angle (degrees)	0		
Face width (inches)	11.5		
Center distance (inches)	22.75		
Number of teeth	23	68	160
Pitch diameter (inches)	11.5	34	80
K-factor (pound per square inch)	557	—	
Unit load (pound per square inch)	9,578	—	
Durability life (hours)	277,000	2,460,000	—
Bending life (hours)	1.99E11	5.91E9	—

K-factor and unit load values are calculated for 1.5 MW at 18.6 rpm.
Life required by AWEA is 175,000 hours.

Table 10. 1.5 MW, 8:1 ratio, helical planetary geometry and rating summary

	Sun	Planet	Ring Gear
Normal diametral pitch	1.8		
Pressure angle (degrees)	20		
Helix angle (degrees)	8.75		
Face width (inches)	11.062		
Center distance (inches)	18.55		
Number of teeth	16	48	113
Pitch diameter (inches)	8.9936	26.9807	63.5170
K-factor (pound per square inch)	881	—	
Unit load (pound per square inch)	11,028	—	
Durability life (hours)	296,000	2,660,000	—
Bending life (hours)	8.63E10	4.27E7	—

Table 11. 1.5 MW, 10:1 ratio, spur planetary geometry and rating summary

	Sun	Planet	Ring Gear
Normal diametral pitch	2.0		
Pressure angle (degrees)	25		
Helix angle (degrees)	0		
Face width (inches)	10.5		
Center distance (inches)	26.25		
Number of teeth	21	84	189
Pitch diameter (inches)	10.5	42	94.5
K-factor (pound per square inch)	547	—	
Unit load (pound per square inch)	9,191	—	
Durability life (hours)	409,000	4,910,000	—
Bending life (hours)	1.50E13	3.45E9	—

Table 12. 1.5 MW, 10:1 ratio, helical planetary geometry and rating summary

	Sun	Planet	Ring Gear
Normal diametral pitch	1.96		
Pressure angle (degrees)	20		
Helix angle (degrees)	8.75		
Face width (inches)	10.14		
Center distance (inches)	20.9245		
Number of teeth	16	63	143
Pitch diameter (inches)	8.2594	32.5214	73.8183
K-factor (pound per square inch)	877	—	
Unit load (pound per square inch)	11,624	—	
Durability life (hours)	326,000	3,850,000	—
Bending life (hours)	3.97E10	2.83E7	—

Table 13. 1.5 MW, 12:1 ratio, spur planetary geometry and rating summary

	Sun	Planet	Ring Gear
Normal diametral pitch	2.0		
Pressure angle (degrees)	25		
Helix angle (degrees)	0		
Face width (inches)	10		
Center distance (inches)	30		
Number of teeth	20	100	220
Pitch diameter (inches)	10	50	110
K-factor (pound per square inch)	507	—	
Unit load (pound per square inch)	8,444	—	
Durability life (hours)	651,000	9,770,000	—
Bending life (hours)	1.87E14	6.10E10	—

Table 14. 1.5 MW, 12:1 ratio, helical planetary geometry and rating summary

	Sun	Planet	Ring Gear
Normal diametral pitch	2.1247		
Pressure angle (degrees)	20		
Helix angle (degrees)	8.75		
Face width (inches)	9.37		
Center distance (inches)	22.8571		
Number of teeth	16	80	176
Pitch diameter (inches)	7.6190	38.0952	83.8095
K-factor (pound per square inch)	835	—	
Unit load (pound per square inch)	11,138	—	

A Miner's Rule analysis was not performed on this gearset since the unit load and K-factor values were less than those used on the 8:1 and 10:1 helical gearsets.
K-factor and unit load values are calculated for 1.5 MW at 18.6 rpm.
Life required by AWEA is 175,000 hours.

5 1.5 MW baseline design, 72:1 ratio

The baseline design is based on a spur compound planetary gearset combined with a single helical parallel shaft output that was designed and developed at the Cincinnati Gear Company. The gearbox was originally designed to meet a specification developed by Enron for a 1.5 MW duty cycle. The gearbox was evaluated for the Windward 77m duty cycle using Miner's Rule and AGMA 2001-C95. The Windward 77m duty cycle is harsher than the Enron duty cycle. In order for this gearbox to meet the life requirements for the Windward 77m duty cycle, the sun pinion must be made with grade 3 material. The lives for the gears for several different duty cycles are as follows.

Table 15. Baseline design gear life summary

	Design D/C	Company Q D/C	Windward 70m D/C	Windward 77m D/C
Max blade torque (kNm)	909	930	910	1,010
Cubic mean load (kNm)	618	618	596	678
Average speed (rpm)	20	17.55	15.78	13.7
Hours in cycle (20 yr)	135,460	157,827	153,160	146,895

Abbreviations: D/C, duty cycle; kNm, kilo Newton meters; m, meter; rpm, rotations per minute; yr, year.

		Design D/C	Company Q D/C	Windward 70 m D/C	Windward 77 m D/C
Low-speed planet-ring mesh					
Low-speed planet life (hours)					
Bending	(st=41,435 psi)	7.05E+10	1.56E+11	8.05E+10	1.12E+09
Contact	(sc=151,378 psi)	6,580,000	7,620,000	7,260,000	2,240,000
Ring gear life (hours)					
Contact	(sc=151,378 psi)	673,000	780,000	744,000	229,000
Sun high-speed planet mesh					
High-speed planet life (hours)					
Contact	(sc=164,188 psi)	1,540,000	1,790,000	1,700,000	525,000
Bending	(st=41,700 psi)	1.10E+11	2.43E+11	1.25E+11	1.75E+09
Sun pinion life (hours)					454,000
Contact	(sc=164,188 psi)	158,000	183,000	174,000	53,700
Bending	(st=40,847 psi)	5.91E+09	1.31E+10	6.75E+09	9.43E+07

1. 20 rpm blade speed.
2. Lower life factor curve.
3. Ka = Ca = 1.0.
Abbreviations: D/C, duty cycle; m, meter; psi, pounds per square inch.

6 1.5 MW parallel shaft, single helical, 20:1 ratio, six generator design

During the WindPACT progress review presentation at NREL in January 2002, discussions arose regarding the results of the Company Q team. They had concluded that a parallel shaft gearbox with 6 generators was the most cost effective solution. The gearbox ratio used was 20:1. This allowed for higher speed generators thus reducing the overall cost even though the cost of the gearbox increased.

Our original study limited the single stage parallel shaft ratio to 8:1. This is the ratio limit in which it is usually more cost effective to go to two stages of gearing. There are additional concerns with high ratio parallel shaft units, which are discussed in the summary of this section.

Northern Power Systems requested that we look into the possibility of a 20:1 parallel shaft, 6 generator gearbox design.

6.1 Gear rating

The gearset was sized using the method described in Section 2.3. Single helical, carburized and hardened gearing was chosen for optimum performance and smallest size. The K-Factor and Unit Load limits were held to values that were previously shown to be acceptable on the 8:1 ratio units. A Miner's Rule analysis was performed using the Windward 77m duty cycle and the AGMA 2001 Gear Rating standard. A summary of the pinion and gear ratings and life is as follows.

Table 16. 1.5 MW, 20:1 ratio, single helical parallel shaft geometry and rating summary

	Pinion	Gear
Normal diametral pitch	3.75	
Pressure angle (degrees)	20	
Helix angle (degrees)	15	
Face width (inches)	5.00	
Center distance (inches)	52.1779	
Number of teeth	18	360
Pitch diameter (inches)	4.9693	99.3865
K-factor (pound per square inch)	996	
Unit load (pound per square inch)	17,145	
Durability life (hours)	483,000	1,610,000
Bending life (hours)	36,100,000	148,000,000

K-factor and unit load values are calculated for 1.5 MW at 18.6 rpm.
Life required by AWEA is 175,000 hours.

6.2 Bearing loads and sizing

The low speed bearings used in the baseline gearbox were also selected for this unit on the bull gear shaft. The high-speed pinion bearing loads were calculated and bearings were selected to meet the required design life. Listed below is a summary of the high-speed shaft bearings selected and their respective calculated basic L10 lives.

Bearing type	Radial (cylindrical roller)	Thrust (4 pt angular contact)
Designation number	NU 2320	QJ 320 N2
Load (pounds)	12,500	6,125
Basic dynamic capacity (pounds)	131,000	69,000
Basic L10 life (hours)	112,852	52,286

This is the arrangement shown in Figure 2. As an alternative, GCSC also looked into using two tapered roller bearings in place of the cylindrical roller and 4 point angular contact bearing on the generator end of the shaft. Both arrangements were quoted and the tapered roller bearing alternative was the least expensive. The tapered roller bearing arrangement was used for the cost summary. Listed below is the L10 life of the two tapered roller bearings. Note that the same cylindrical roller bearing is used on the turbine end of the shaft.

Bearing type	Tapered roller	Tapered roller
Designation number	30320	31320 X
Equivalent load (pounds)	6,110	8,147
Basic dynamic capacity (pounds)	84,100	90,400
Basic L10 life (hours)	356,278	107,294

Life required by AWEA is 30,000 hours, which we believe is based on a catalog rating and not any advanced bearing life calculations. Advanced bearing life calculations take into account the effect of speed and oil cleanliness to increase the calculated life.

6.3 Summary

There are some additional concerns regarding a ratio this high. At a 20:1 ratio, the bull gear face to pitch diameter ratio gets very small. This means the gear is fairly thin relative to its diameter. This creates the following potential problems:

- With a single helical gear there are thrust forces that will try to deflect the bull gear. This can create load distribution problems across the face. An exaggerated deflection plot would make the bull gear look like a wavy potato chip. We have seen this problem on gearsets with much lower ratios than 20:1. We do have some experience with gearsets that have ratios this high but they all use thrust collars to cancel the thrust forces exerted on the gear. This is possible with this gearset but thrust collars could potentially drive cost up and may make assembly more challenging. A finite element analysis would be required in order to determine the deflections on the bull gear if thrust collars are not used.
- This gearset was designed to be carburized and hardened to keep the gearset size to a minimum. With a bull gear this thin, the carburize and harden process can create a lot of distortion in the part that must be ground out. Too much distortion creates grind steps in the roots of the teeth. These grind steps are stress concentrations in the roots where the bending stress is highest. A possible solution would be to nitride the gear to minimize distortion. This requires the use of a high chrome (2.5%) steel with no aluminum which also comes at a cost premium for a gear this size.
- The low face to diameter ratio may also create a resonant frequency problem in the bull gear. If the resonant frequency of the gear is within the audible hearing range, the gearbox could be noisy.

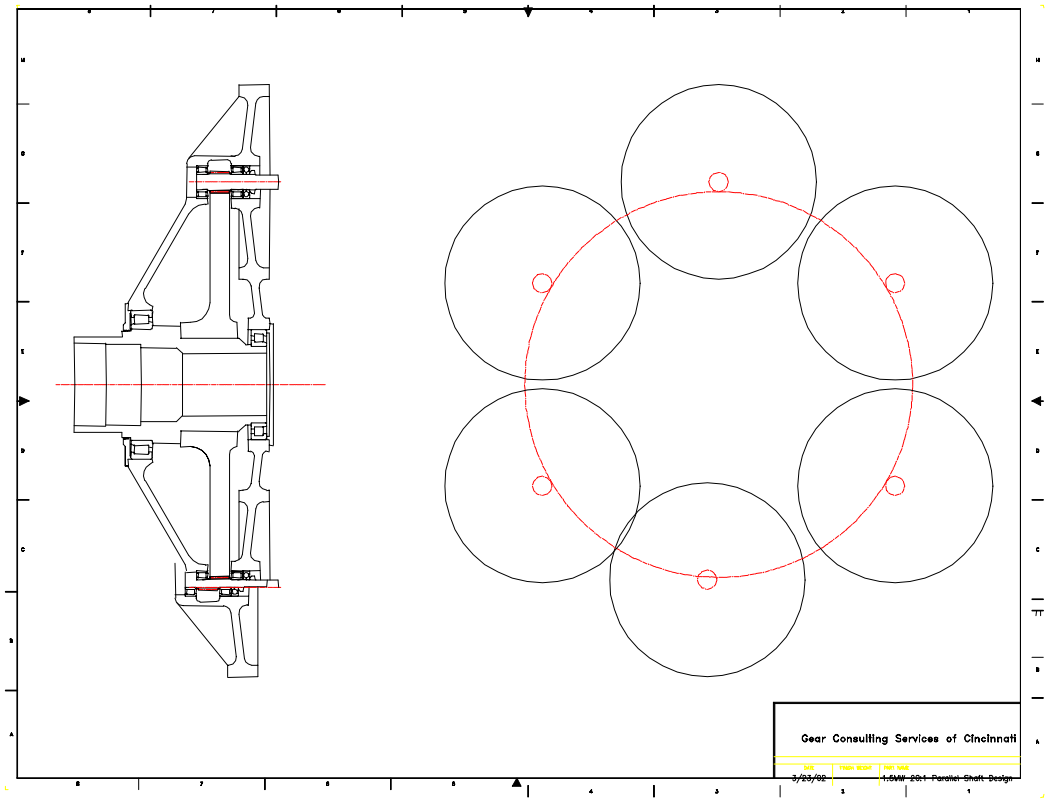

Figure 2. Cross-section drawing

7 1.5 MW parallel shaft, single helical, 14:1 ratio, six generator design

A 14:1 ratio, parallel shaft, six generator design was also evaluated in order to give a price point between the 8:1 and 20:1 ratios.

7.1 Gear rating

The gearset was sized using the method described in Section 2.3. Single helical, carburized and hardened gearing was chosen for optimum performance and smallest size. The K-Factor and Unit Load limits were held to values that were previously shown to be acceptable on the 8:1 ratio units. A Miner's Rule analysis was performed using the Windward 77m duty cycle and the AGMA 2001 Gear Rating standard. A summary of the pinion and gear ratings and life is as follows.

Table 17. 1.5 MW, 14:1 ratio, single helical parallel shaft geometry and rating summary

	Pinion	Gear
Normal diametral pitch	3.5	
Pressure angle (degrees)	20	
Helix angle (degrees)	15	
Face width (inches)	5.62	
Center distance (inches)	42.1505	
Number of teeth	19	266
Pitch diameter (inches)	5.6201	78.681
K-factor (pound per square inch)	980	
Unit load (pound per square inch)	17,983	
Durability life (hours)	650,000	1,520,000
Bending life (hours)	7,840,000	128,000,000

K-factor and unit load values are calculated for 1.5 MW at 18.6 rpm.
Life required by AWEA is 175,000 hours.

7.2 Bearing loads and sizing

The low speed bearings used in the baseline gearbox were also selected for this unit on the bull gear shaft. The high-speed pinion bearing loads were calculated and bearings were selected to meet the required design life. Listed below is a summary of the high-speed shaft bearings selected and their respective calculated basic L10 lives.

Bearing type	Radial (cylindrical roller)	Thrust (4 pt angular contact)
Designation number	NU 2322 EC	QJ 322 N2
Load (pounds)	15,700	7,737
Basic dynamic capacity (pounds)	153,000	81,800
Basic L10 life (hours)	126,526	61,742

This is the arrangement shown in the Figure 3. As an alternative, GCSC also looked into using two tapered roller bearings in place of the cylindrical roller and 4 point angular contact bearing on the generator end of the shaft. Both arrangements were quoted and the tapered roller bearing alternative was the least expensive. The tapered roller bearing arrangement was used for the cost summary. Listed below is the L10 life of the two tapered roller bearings. Note that the same cylindrical roller bearing is used on the turbine end of the shaft.

Bearing type	Tapered roller	Tapered roller
Designation number	30322	31322 X
Equivalent load (pounds)	7,788	10,335
Basic dynamic capacity (pounds)	106,000	103,000
Basic L10 life (hours)	385,307	150,767

Life required by AWEA is 30,000 hours, which we believe is based on a catalog rating and not any advanced bearing life calculations. Advanced bearing life calculations take into account the effect of speed and oil cleanliness to increase the calculated life.

7.3 Summary

The 14:1 ratio design has the same issues stated in the summary section of the 20:1 ratio although not to the same extent.

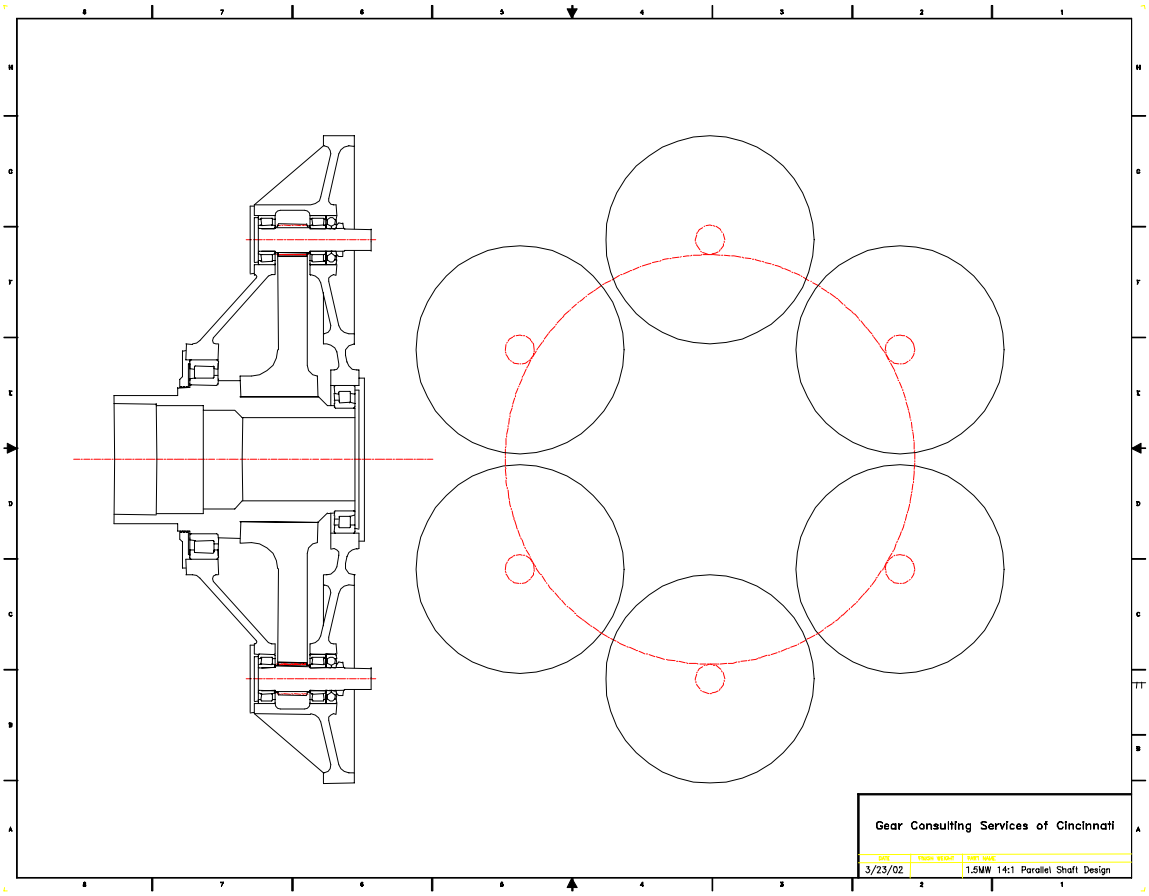

Figure 3. Cross-section drawing

8 1.5 MW 13.89:1 ratio, helical compound planetary design

In response to the need for reducing cost and weight in the compound planetary gearbox, GCSC recommended looking at the possibility of using helical gears in the compound planetary design. Helical gears can carry more load than an equivalent spur gearset. The cost of making a helical gear is slightly more than a spur, however the reduced size in the large components overcomes the increase in cost for helical gears.

8.1 Gear rating

The gearset was sized using the method described in Section 2.3. Single helical, carburized and hardened gearing was chosen for optimum performance and smallest size. The K-Factor and Unit Load limits were held to values that were previously shown to be acceptable on the 8:1 ratio units. A Miner's Rule analysis was performed using the Windward 77m duty cycle and the AGMA 2001 Gear Rating standard. A summary of the pinion and gear ratings and life is as follows.

Table 18. 1.5 MW, 13.89:1 ratio, helical compound planetary geometry and rating summary

High-speed mesh	Pinion	Gear
Normal diametral pitch	3.8132	
Pressure angle (degrees)	20	
Helix angle (degrees)	19.25	
Face width (inches)	7.5	
Center distance (inches)	15.9722	
Number of teeth	27	88
Pitch diameter (inches)	7.5	24.4444
K-factor (pound per square inch)	1013	
Unit load (pound per square inch)	20937	
Durability life (hours)	297,000	2,900,00
Bending life (hours)	5,300,000	52,000,000
Low-speed mesh	**Pinion**	**Internal gear**
Normal diametral pitch	2.0588	
Pressure angle (degrees)	25	
Helix angle (degrees)	8.75	
Face width (inches)	8.75	
Center distance (inches)	15.9722	
Number of teeth	22	87
Pitch diameter (inches)	10.812	42.7564
K-factor (pound per square inch)	779	
Unit load (pound per square inch)	22932	
Durability life (hours)	44,300,000	283,000
Bending life (hours)	239,000,000	N/A

K-factor and unit load values are calculated for 1.5 MW at 18.6 rpm.
Life required by AWEA is 175,000 hours.
Abbreviations: N/A, not applicable.

8.2 Bearing loads and sizing

The carrier bearings used in the baseline gearbox were also selected for this unit. The planet bearing loads were calculated and bearings were selected to meet the required design life. Listed below is a summary of the planet gear bearings selected and their respective calculated basic L10 lives.

Table 19. Planet bearings

Bearing type	Cylindrical roller
Designation number	NJ 2340 EC
Load (pounds)	72,700
Basic dynamic capacity (pounds)	461,000
Basic L10 life (hours)	106,944

Life required by AWEA is 100,000 hours, which we believe is based on a catalog rating and not any advanced bearing life calculations. Advanced bearing life calculations take into account the effect of speed and oil cleanliness to increase the calculated life.

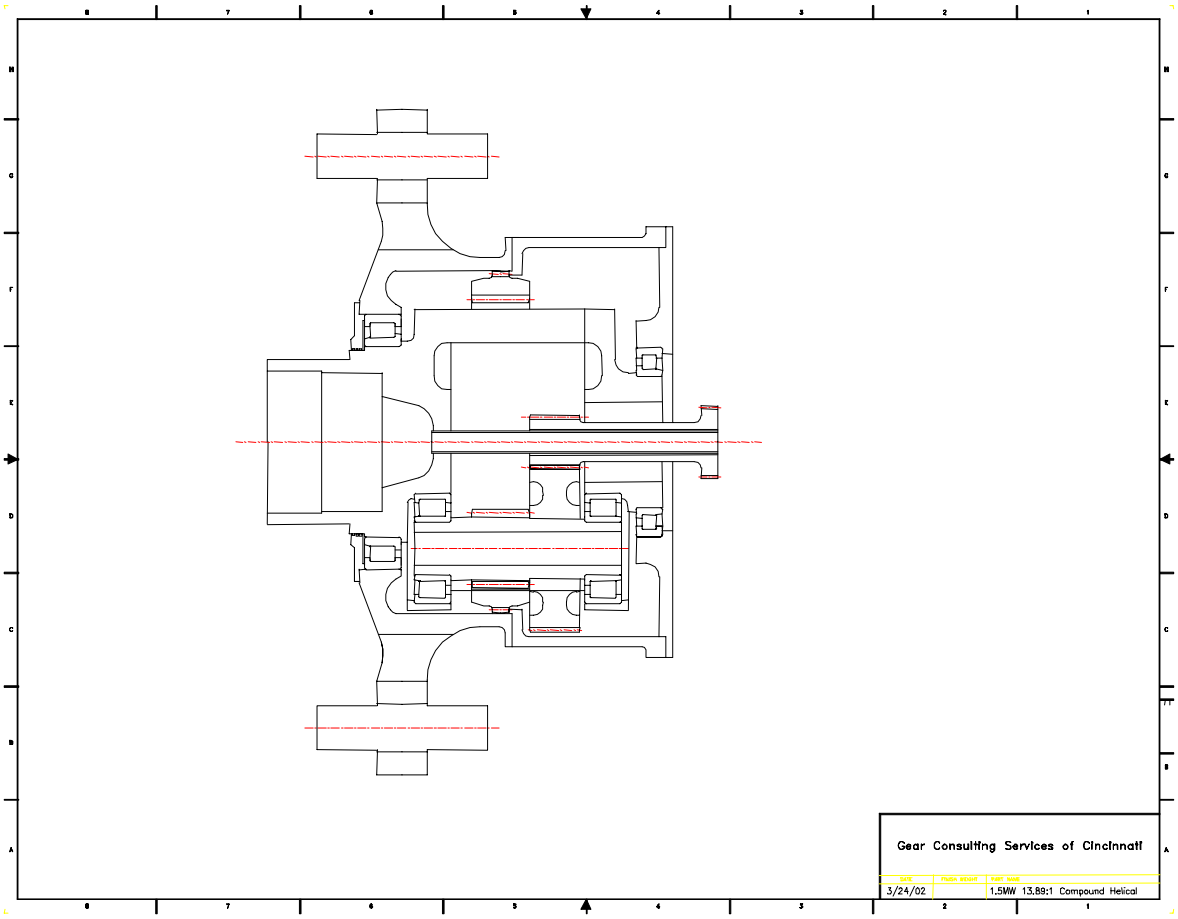

Figure 4. Cross-section drawing

9 3 MW 16:1 ratio, spur and helical compound planetary design

For the 3 MW compound planetary designs, Northern requested a higher ratio. GCSC chose to increase the ratio to 16:1. Both spur and helical designs were evaluated for size, weight and cost.

9.1 Gear rating

The gearset was sized using the method described in Section 2.3. Carburized and hardened gearing was chosen for optimum performance and smallest size. A Miner's Rule analysis was performed using the Northern 3 MW duty cycle and the AGMA 2001 Gear Rating standard. Note that two revisions of the duty cycle were used. The first revision used a scaled duty cycle, while the second duty cycle was derived from simulations for the 3MW turbine. The sizing was done with the first duty cycle, and checked against the second. A discussion of the comparisons is given in Appendix C. A summary of the pinion and gear ratings and life is as follows:

Table 20. 3 MW, 16:1 ratio, spur compound planetary geometry and rating summary

High-speed mesh	Pinion	Gear
Normal diametral pitch	2.25	
Pressure angle (degrees)	20	
Helix angle (degrees)	0	
Face width (inches)	12	
Center distance (inches)	27.5556	
Number of teeth	27	97
Pitch diameter (inches)	12.0	43.1111
K-factor (pound per square inch)	511	
Unit load (pound per square inch)	10,789	
Durability life (hours)	359,000	3,870,000
Bending life (hours)	6.46E10	1.75E11
Low-speed mesh	**Pinion**	**Internal gear**
Normal diametral pitch	1.3246	
Pressure angle (degrees)	25	
Helix angle (degrees)	0	
Face width (inches)	14.25	
Center distance (inches)	27.5556	
Number of teeth	23	96
Pitch diameter (inches)	17.3637	72.4747
K-factor (pound per square inch)	439	
Unit load (pound per square inch)	13280	
Durability life (hours)	30,000,000	202,000
Bending life (hours)	1.64E11	N/A

K-factor and unit load values are calculated for 3 MW at 15.3 rpm.
Life required by AWEA is 175,000 hours.
Abbreviations: N/A, not applicable.

Table 21. 3 MW, 16:1 ratio, helical compound planetary geometry and rating summary

High-speed mesh	Pinion	Gear
Normal diametral pitch	3.0717	
Pressure angle (degrees)	20	
Helix angle (degrees)	19.25	
Face width (inches)	7.5	
Center distance (inches)	21.3793	
Number of teeth	27	97
Pitch diameter (inches)	9.3103	33.4483
K-factor (pound per square inch)	1094	
Unit load (pound per square inch)	23102	
Durability life (hours)	267,000	2,880,000
Bending life (hours)	678,000	7,890,000
Low-speed mesh	**Pinion**	**Internal gear**
Normal diametral pitch	1.7274	
Pressure angle (degrees)	25	
Helix angle (degrees)	8.75	
Face width (inches)	12.0	
Center distance (inches)	21.3793	
Number of teeth	23	96
Pitch diameter (inches)	13.4719	56.2305
K-factor (pound per square inch)	866	
Unit load (pound per square inch)	26198	
Durability life (hours)	40,500,000	273,000
Bending life (hours)	4,770,000	N/A

K-factor and unit load values are calculated for 3 MW at 15.3 rpm.
Life required by AWEA is 175,000 hours.
Abbreviations: N/A, not applicable.

9.2 Carrier bearing loads and sizing

The carrier bearings selected for this unit were sized using the extreme rotor loads shown below (given to GCSC from Northern on 3/12/02).

- Maximum moment = 5008 kNm = 44,324,534.9 in-lbs
- Maximum thrust load = 689 kN = 154,893.4 lbs
- Rotor weight = 70,000 kg = 154,376.3 lbs

These forces and moments were used to calculate the bearings loads by the following method. The baseline design is a three point mounting arrangement and there are three bearings on the main shaft line. This is an indeterminate system when assuming infinite shaft stiffness. The gearbox is mounted on elastomer mounts, which will allow some rotational and translational movement. Bearing loads were estimated by first calculating loads on the main shaft bearing and the gearbox mounts as if they were a two bearing system. The radial load calculated on the gearbox mounts were then applied as a load through the gearcase to the carrier bearings. The rotor end carrier bearing has the largest load since it is closest to the gearbox mounting points. This approach was found to give similar results against a complete analysis that included all the stiffnesses of the entire system for the 1.5 MW baseline design. It should be noted however, that this is a rough estimation and that a complete system analysis would be required to more accurately determine the bearing loads.

Calculated bearing and gearbox mount loads are

- Main shaft bearing = 535,709.6 pounds
- Gearbox mount loads = 381,333.3 pounds
- Rotor end carrier bearing = 498,764.1 pounds
- Generator end carrier bearing = 36,945.49 pounds

Since these loads are extremes, the loads were only checked against the static rating of the carrier bearings. The rotor end carrier bearing was sized to be the next size larger than the shaft diameter given at 33". The generator end carrier bearing was sized to be large enough to allow clearance for the sun pinion removal.

Bearing type	Rotor end carrier bearing (cylindrical roller)	Generator end carrier bearing (cylindrical roller)
Designation number	NJ 29/1060	NJ 10/600
Maximum load (pounds)	498,764.1	36,945.5
Static capacity (pounds)	3,889,195	1,150,000
Static FOS	7.8	31.1

The static capacity is well above the calculated maximum loads of each bearing. However, these bearings should be evaluated for fatigue life to verify their size is adequate.

9.3 Planet bearing loads and sizing

The planet bearing loads were calculated and bearings were selected to meet the required design life. Listed below is a summary of the bearings selected and their respective calculated basic L10 lives.

Table 22. Planet bearings in spur unit

Bearing type	Radial bearings (cylindrical roller)
Designation number	TNJ9248VAA
Load (pounds)	97,408
Basic dynamic capacity (pounds)	523,895
Basic L10 life (hours)	85,284
Life per Company N (hours)	142,000

Table 23. Planet bearings in helical unit

Bearing type	Cylindrical roller
Designation number	TNJ9252VAA
Load (pounds)	107,115
Basic dynamic capacity (pounds)	642,954
Basic L10 life (hours)	123,041
Life per Company N (hours)	N/A

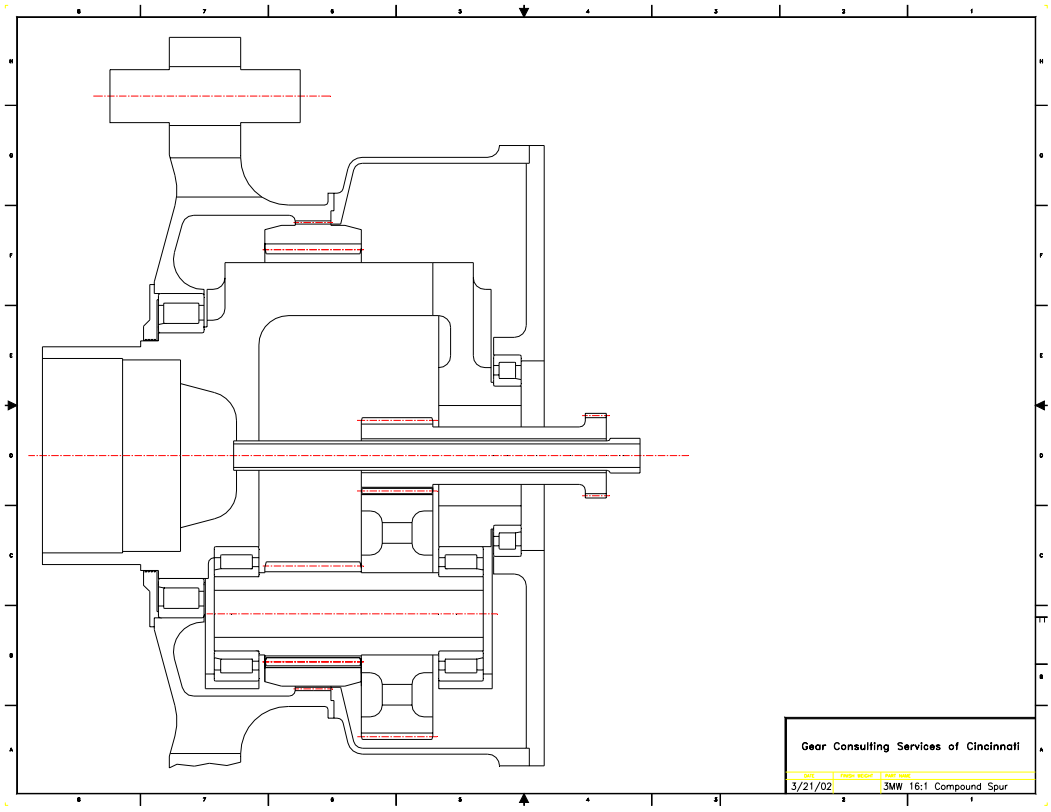

Figure 5. Spur design (cross-section)

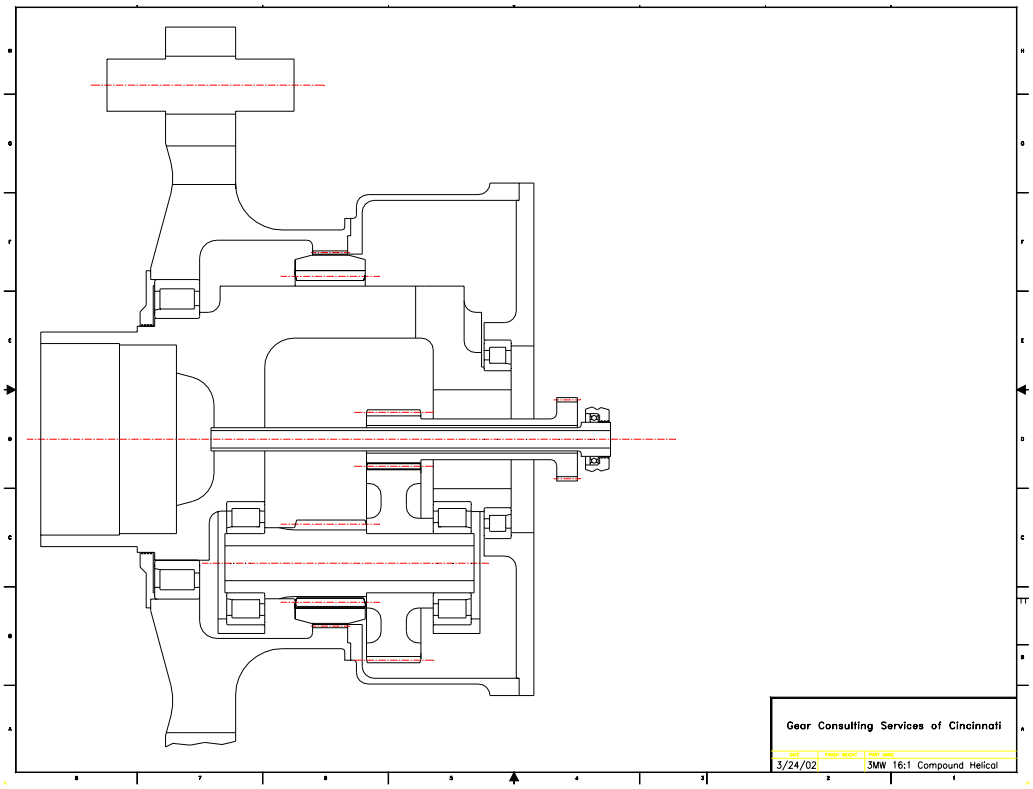

Figure 6. Helical design (cross-section)

10 3 MW 94:1 ratio, baseline designs

The baseline design for the 3 MW design consists of a 16:1 ratio compound planetary section and a 5.88:1 parallel shaft section. Both the helical and spur compound planetary gearboxes were evaluated for this baseline design. The parallel shaft section is the same for both units.

10.1 3 MW parallel shaft, single helical, 5.88:1 ratio section

Gear rating

The gearset was sized using the method described in Section 2.3. Single helical, carburized and hardened gearing was chosen for optimum performance and smallest size. The K-Factor and Unit Load limits were held to values that were previously shown to be acceptable on the 8:1 ratio units. A Miner's Rule analysis was performed using the Northern 3 MW duty cycle and the AGMA 2001 Gear Rating standard. A summary of the pinion and gear ratings and life is as follows.

Table 24. 3 MW, 5.88:1 ratio, single helical parallel shaft geometry and rating summary

	Pinion	Gear
Normal diametral pitch	2.5	
Pressure angle (degrees)	20	
Helix angle (degrees)	10	
Face width (inches)	5.75	
Center distance (inches)	32.0875	
Number of teeth	23	135
Pitch diameter (inches)	9.3419	54.833
K-factor (pound per square inch)	822	
Unit load (pound per square inch)	16,410	
Durability life (hours)	309,000	1,820,000
Bending life (hours)	5.59E8	2.13E8

K-factor and unit load values are calculated for 3 MW at 1440 rpm at the generator.
Life required by AWEA is 175,000 hours.

The original gearing duty cycle was scaled from the 1.5 MW duty cycle using a technique developed by Northern, and a revised duty cycle was calculated based on full turbine simulations. An engineering memo (Appendix E) presents a comparative evaluation of the two duty cycles and impacts on gearing.

10.1.1 Bearing loads and sizing

The high-speed pinion and bull gear bearing loads were calculated and bearings were selected to meet the required design life. Listed below is a summary of the high and low speed shaft bearings selected and their respective calculated basic L10 lives.

Table 25. High-speed pinion shaft bearings

Bearing type	Radial (cylindrical roller)	Thrust (4 pt angular contact)
Designation number	NU 2334 MA	QJ 334
Load (pounds)	20,200	6,598
Basic dynamic capacity (pounds)	276,516	139,000
Basic L10 life (hours)	71,109	88,446

Table 26. High-speed gear shaft bearings

Bearing type	Tapered roller
Designation number	32244
Equivalent load (pounds)	31,606
Basic dynamic capacity (pounds)	362,000
Basic L10 life (hours)	230,395

Life required by AWEA is 40,000 hours, which we believe is based on a catalog rating and not any advanced bearing life calculations. Advanced bearing life calculations take into account the effect of speed and oil cleanliness to increase the calculated life.

The 3 MW baseline design (Figure 7) consists of the 5.88:1 parallel shaft gearset described in Section 10.1with the 16:1 spur compound planetary gearset described in Section 9.1.

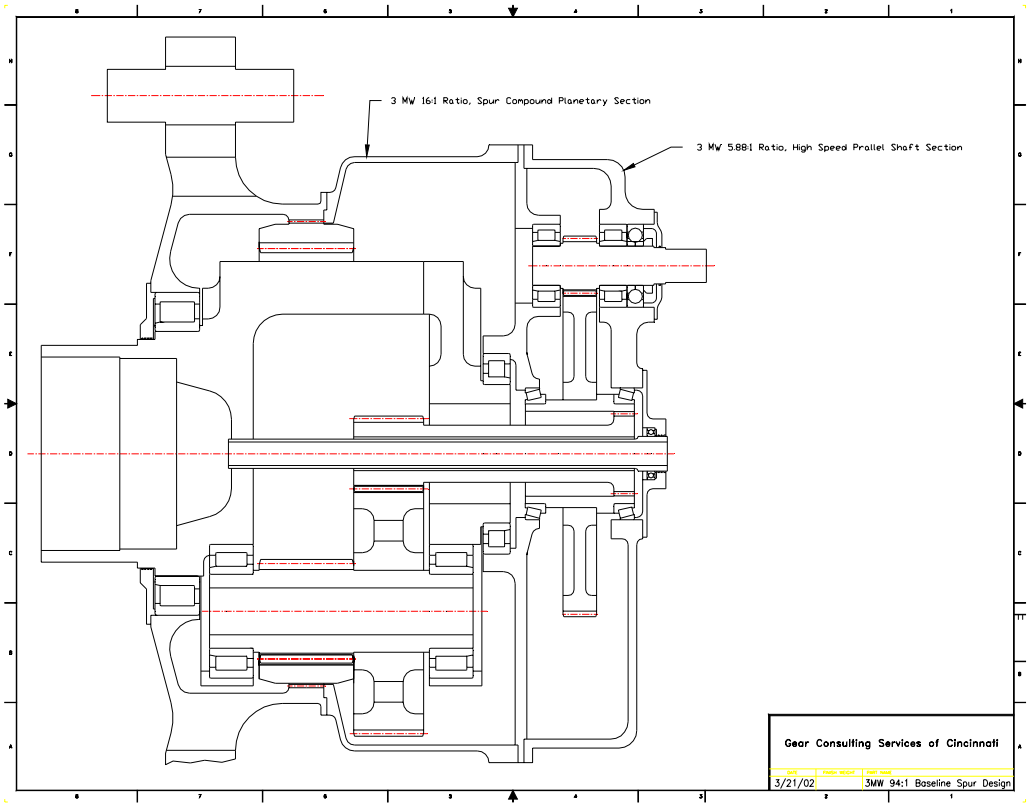

Figure 7. 3 MW baseline 94:1 ratio with spur compound planetary (cross-section)

The 3 MW baseline design (Figure 8) consists of the 5.88:1 parallel shaft gearset described in Section 10.1with the 16:1 helical compound planetary gearset described in Section 9.1.

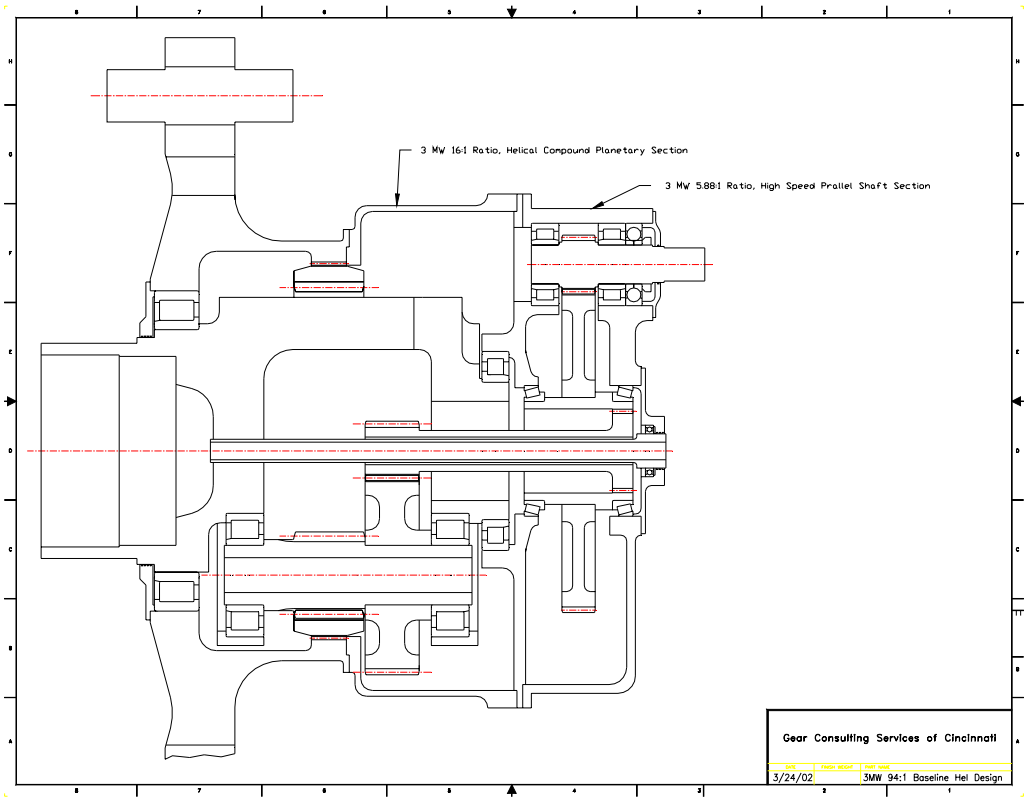

Figure 8. 3 MW baseline 94:1 ratio with helical compound planetary (cross-section)

11 Integrated bearing designs

Two basic integrated bearing configurations have been evaluated. The first configuration is a modification to the baseline gearbox design (compound epicyclic + parallel shaft, 72 : 1 ratio) where the turbine rotor and associated loads are reacted in the gearbox bearings. This configuration consists of two different arrangements, a back to back bearing design and a straddle mounted bearing design. The second configuration is a direct drive back to back bearing design where the turbine rotor drives a low speed generator directly without the use of a gearbox. Each of these configurations and associated load duty cycles will be reviewed in this section.

The integrated bearing configuration eliminates the need for an intermediate shaft and support bearing between the turbine rotor and gearbox / generator.

It should be noted that several load duty cycles have been evaluated for the integrated bearing configurations. Section 11.1 uses turbine rotor loads originally supplied by Northern (1.5MW Bearing Load SpecC.xls, 12 March 2002) where the static rotor weight was included in the "My" moment rotor load data. Subsequent correspondence with Northern and Company O indicate that this approach will not reveal accurate results, but is acceptable for initial analysis purposes. Section 11.2 uses the most recent load duty cycle supplied by Northern (1.5MWDD70mMainBearingLoadSpecD.xls, 13 May 2002). This data separates the static rotor weight load from the dynamic load values and also includes the static rotor weight of the generator. An intermediate load duty cycle (MainBearingLoadsRevA.xls, 30 April 2002) was also reviewed and evaluated but is not summarized in this report because the data was superseded by the data used in Section 11.2. Since the analysis of the integrated bearings for the direct drive configuration (Section 11.2) is also applicable to the gearbox configuration (Section 11.2), the gearbox analysis stands as a history of bearing selection information that was presented at the meeting in March 2002 based on the original load duty cycle.

Another important difference between the original and revised duty cycle loads is the load application point. The original duty cycle loads were applied at the rotor flange whereas the updated duty cycle loads were applied at the center of the rotor.

Performing a 10/3 mean reduction of duty cycle loads and inputting into the catalog life equation results in a similar bearing life as performing a "weighted" life (Miner's Rule Analysis) calculation using individual lives for each load point. See Appendix A (Formulas).

11.1 Modification of baseline gearbox configuration (rotor connected to generator through gearbox)

In order to simplify the overall rotor, gearbox, generator system, the gearbox has been evaluated regarding the possibility of reacting the rotor loads directly within the gearbox without the need of an external bearing between the rotor and the gearbox.

The compound planetary gearbox design offers a good potential for this to occur due to the larger bearings required to support the rotating carrier.

This type of mounting configuration imposes more loading on the gearcase. This will require special deflection and stress analysis in order to fully evaluate the feasibility of the designs discussed in this summary.

Two different bearing configurations were evaluated. One is a straddle mounting arrangement in which the bearings straddle the carrier. The other is an overhung bearing arrangement in which both support bearings are located on the rotor side of the carrier.

Both the 1.5 MW and 3 MW compound planetary gearbox designs were investigated for mounting in this integrated arrangement.

The extreme loads supplied were used to evaluate the static load rating of the bearings. 10/3 Mean loading (corresponding to the life equation for rolling element bearings) was used to calculate the dynamic load rating of the bearings and ultimately the life (90% reliability). A target value of 175,000 hours was used to select the bearings.

Figure 9 shows the coordinate system used for the loading evaluation.

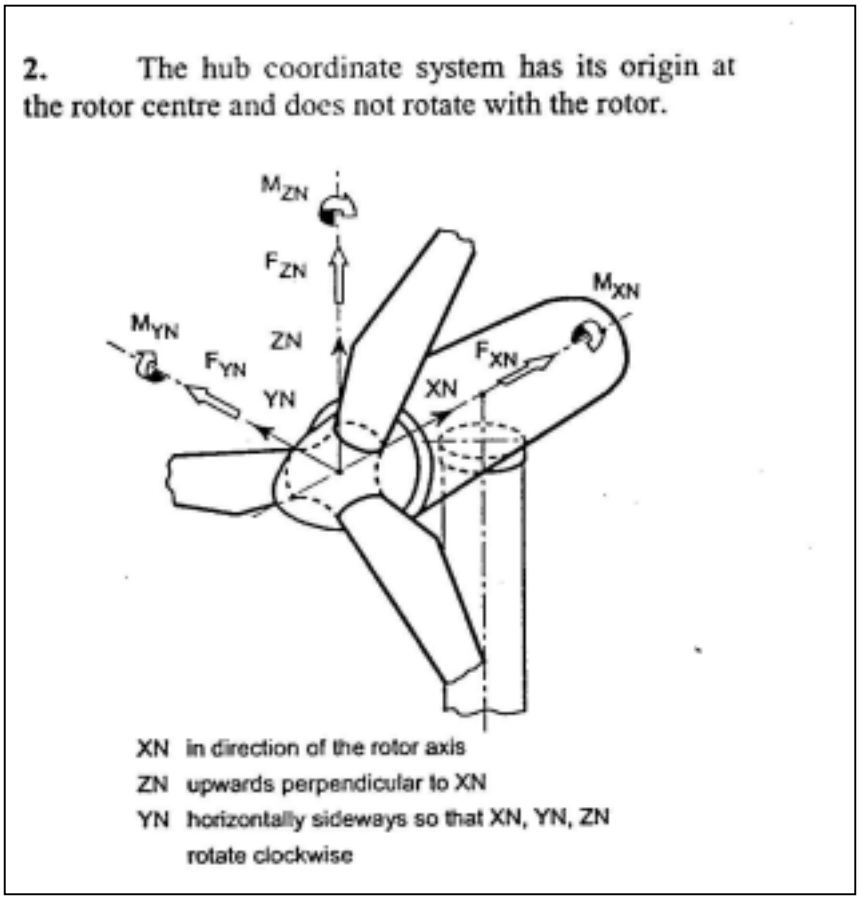

Figure 9. Hub coordinate system

The loads provided were for a rotating coordinate system. In order to simplify the analysis, these loads were applied as if they were in a fixed coordinate system. This approach was used in order to simplify the analysis and comparison evaluation for the different design options. These load values for both “Extreme” and “Dynamic” operating conditions, include the static weight load of the rotor hub assembly.

As discussed previously, the dynamic load values for the 1.5 MW design were calculated from the duty cycle supplied using a 10/3 mean analysis along with an average speed calculation. The loads and number of cycles used to calculate these values are based on the original duty cycle data (MainBearingLoadsRevA.xls, 30 April 2002). A summary of the reduction of 10/3 mean values used are included in Appendix B. For the 3 MW values only extreme loads were given and an approximation of both the dynamic loads and average speed was made. These assumptions are also included on Appendix B.

11.1.1 1.5 MW power level

The straddle mount arrangement allows for reduced bearing loading due to the additional bearing span. Since the mounting diameter on the carrier is typically larger than that of a normal parallel shaft gear train arrangement, larger bearings can easily be accommodated with this type of design. Two different straddle mount bearing selections were made.

The first offers a more compact design with a rotor end bearing having a bore of 33.75 inches. The generator end bearing is smaller due to the reduced thrust load applied to that bearing. Unfortunately the bore of the rotor end bearing is smaller than the mounting flange diameter of 38.8 inches. This will require the use of a shrink disk type coupling to connect the gearbox low speed shaft (carrier) to the rotor assembly. The relative gearbox bearing (only) cost for this particular arrangement in comparison to the baseline would be an additional $10,450. This does not include any cost savings associated with elimination of the main rotor support bearing and shaft on the baseline design.

The second offers a larger rotor end bearing (40 inch bore) that would allow mounting of the bearing over the mounting flange diameter. This eliminates the need for the shrink disk coupling and the costs associated with it. Also, the particular bearing selected for this arrangement is less expensive than the 33.75 inch bore bearing. The relative gearbox bearing (only) cost for this particular arrangement in comparison to the baseline would be an additional $8,350. This does not include any cost savings associated with elimination of the shrink disk and main rotor support bearing and shaft on the baseline design.

The straddle mounted bearing arrangement allows for some of the rotor loading to be transferred not only to the gearcase as mentioned previously but also through the carrier itself. This may prove counter productive if the size of the carrier is required to get larger in order to accommodate the additional stress and deflections associated with the increased loading. The cost of the gearcase and carrier would undoubtedly increase with this type of arrangement. It is very difficult to put a value on this cost impact without additional analysis.

Table 27. 1.5 MW straddle mounted configuration summary

Turbine rotor end bearing "B"						Generator end bearing "A"					
Series	Bore (in)	Po (lb)	so	P (lb)	L10 (hr)	Series	Bore (in)	Po (lb)	so	P (lb)	L10 (hr)
168000	40.0	463,935	3.64	104,320	397,576	243000	19.0	478,559	1.72	54,764	393,805
157000	33.75	463,935	3.56	104,320	428,399	243000	19.0	528,266	1.55	54,764	393,805

Bore = Bearing bore.
Po = Static equivalent load on bearing.
P = Dynamic equivalent load on bearing.
so = Static safety margin.
L10 = Catalog life (90% reliability).
Abbreviations: hr, hour; in, inch; lb, pound.

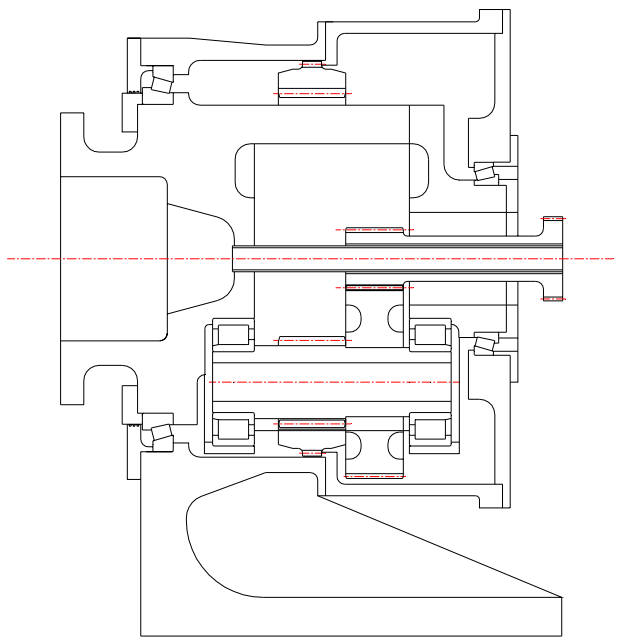

Figure 10. 168000/243000 bearing arrangement (cross-section)

Overhung mount arrangement. The overhung carrier bearing arrangement allows the rotor loading to be transferred directly from the bearing to the gearcase. This would eliminate the transfer of the rotor loading through the carrier. Since all of the rotor loading will be reacted by the overhung bearing assembly, the rotor loads are not transferred through the carrier. The advantage to this is that there are no additional deflections across the gear mesh from the rotor loads.

The bearings selected for this arrangement also have a bore large enough that a shrink disk is not required.

The relative gearbox bearing (only) cost for this particular arrangement in comparison to the baseline would be an additional $28,200. This does not include any cost savings associated with elimination of the shrink disk or the main rotor support bearing and shaft on the baseline design. (See Section 11.1.3 for a complete cost summary.)

The overhung mount bearing arrangement allows for the rotor loading to be transferred directly to the gearcase. The cost impact of the gearcase due to the additional loading requirements cannot be fully evaluated without additional stress and deflection analysis. The cost of the gearcase would undoubtedly increase. It is very difficult to put a value on this cost impact without additional analysis.

Table 28. 1.5 MW overhung mount configuration summary

	Turbine rotor end bearing "B"						Generator end bearing "A"					
BS (in)	Series	Bore (in)	Po (lb)	So	P (lb)	L10 (hr)	Series	Bore (in)	Po (lb)	so	P (lb)	L10 (hr)
17	277000	45.5	1.15 E6	2.26	191,607	177,378	277000	45.5	1.10 E6	2.36	154,628	362,506

Bore = Bearing bore.
Po = Static Equivalent load on bearing.
P = Dynamic equivalent load on bearing.
so = Static safety margin.
L10 = Catalog life (90 % reliability).
Abbreviations: BS, bearing span; hr, hour; in, inch; lb, pound.

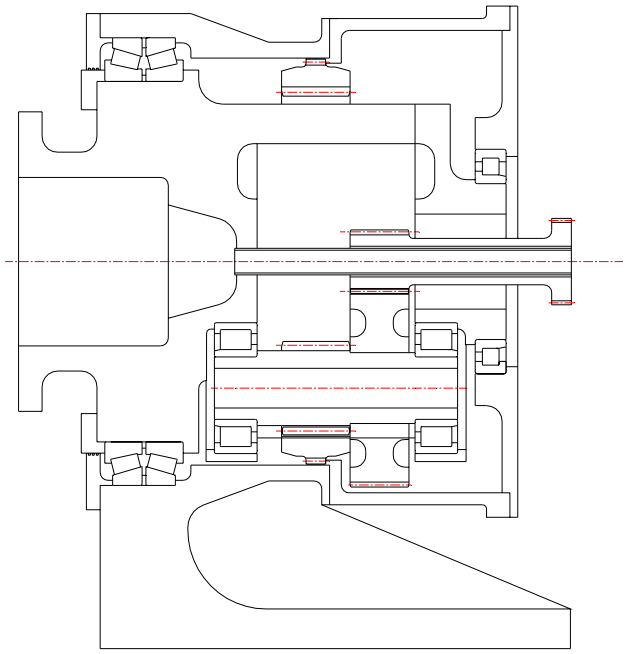

Figure 11. 277000/277000 bearing arrangement (cross-section)

11.1.2 3 MW power level

Straddle mount arrangement. Bearings for the 3 MW gearbox have been selected in the same way as described above for the 1.5 MW gearbox. Two different bearing arrangements were evaluated based on the preliminary extreme loading values supplied. Loading for the dynamic analysis was extrapolated from the 1.5 MW design. The accuracy of these load values would have to be further evaluated in order to determine final design arrangement.

The relative gearbox bearing (only) cost for this particular arrangement in comparison to the baseline would be an additional $17,600. This does not include any cost savings associated with elimination of the main rotor support bearing and shaft on the baseline design.

As discussed previously, additional costs would be associated with both the gearcase and the carrier due to the additional rotor loading.

Table 29. Straddle mount arrangement

Turbine rotor end bearing "B"						Generator end bearing "A"					
Series	Bore (in)	Po (lb)	so	P (lb)	L10 (hr)	Series	Bore (in)	Po (lb)	so	P (lb)	L10 (hr)
277000	45.5	727,704	3.57	207,539	165,261	183400	30	699,125	1.99	101,794	565,230
277000	45.5	830,619	3.13	155,989	428,078	168000	40	659,591	2.56	96,038	636,884

Bore = Bearing bore.
Po = Static equivalent load on bearing.
P = Dynamic equivalent load on bearing.
so = Static Safety Margin
L10 = Catalog life (90% reliability).
Abbreviations: BS, bearing span; hr, hour; in, inch; lb, pound.

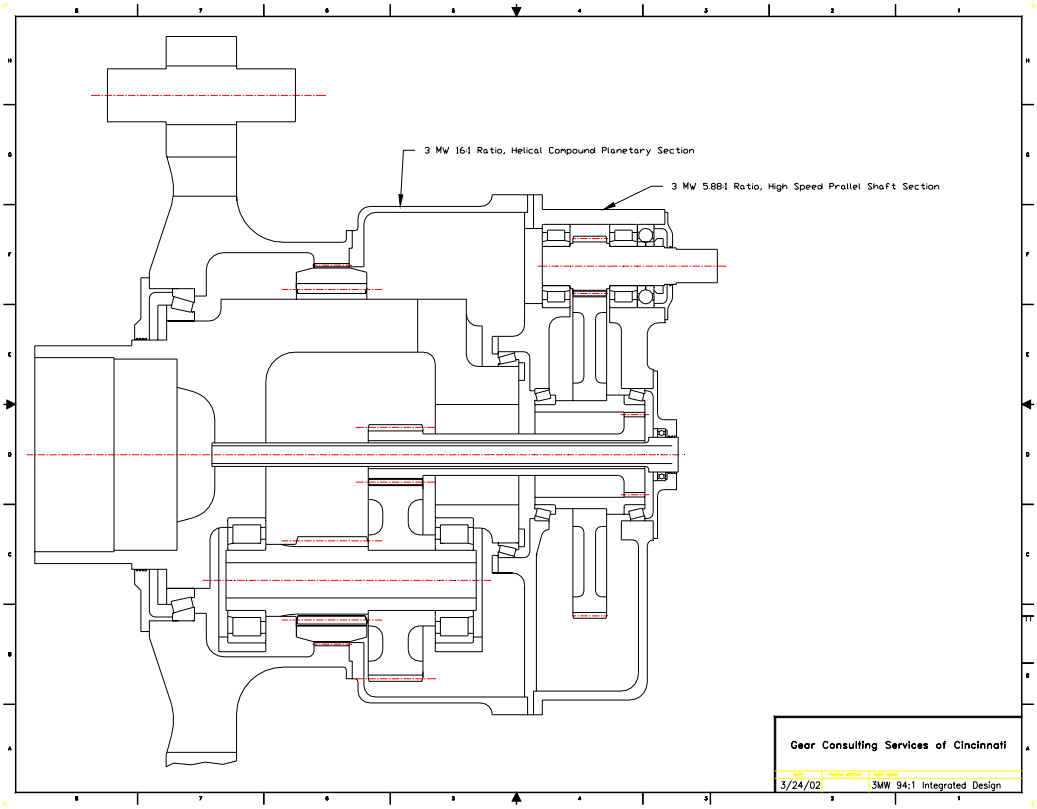

Figure 12. 277000/183400 bearing arrangement (cross-section)

Overhung mount arrangement. Bearing reactions were calculated and used to perform a static and dynamic analysis using the largest standard catalog bearing available. Unfortunately, the resulting bearing lives are very low (<175,000 hours target value). Due to the large size/capacity required, a special bearing will need to be evaluated for this design arrangement. Bearings of this nature are usually not included in standard bearing catalogs. Contact with bearing manufacturers will be required to obtain feasibility, rating, and costing for these types of bearings.

Table 30. Overhung mount configuration summary

BS (in)	Turbine rotor end bearing "B"						Generator end bearing "A"					
	Series	Bore (in)	Po (lb)	so	P (lb)	L10 (hr)	Series	Bore (in)	Po (lb)	so	P (lb)	L10 (hr)
17	277000	45.5	2.75 E6	.95	437,590	13,749	277000	45.5	2.62 E6	.99	381,880	21,648
25.3	299000	61.5	1.86 E6	20.27	300,874	69,707	299000	61.5	1.75 E6	21.53	255,090	120,850

Bore = Bearing bore.
Po = Static equivalent load on bearing.
P = Dynamic equivalent load on bearing.
so = Static Safety Margin
L10 = Catalog life (90% reliability).
Abbreviations: BS, bearing span; hr, hour; in, inch; lb, pound.

11.2 Summary

The straddle mounted bearing configurations offer a larger bearing span which in turn reduces the equivalent radial load on the bearings and results in acceptable bearing lives. This layout allows rotor loads to be transferred through the baseline gearbox carrier. This will complicate gearbox analysis because additional stress and deflection calculations will be required to evaluate the effects on the gear mesh alignment. For this reason, GCSC does not recommend using this arrangement.

The overhung mounted bearing configuration eliminates the issues with transferring rotor loads through the baseline gearbox carrier. Rotor loads will be reacted directly to the baseline gearbox gearcase or the generator casing/housing for the direct drive configuration. This configuration appears to be the optimum approach. Unfortunately, this arrangement requires bearings with higher capacity.

Applying the original load duty cycle (1.5MW Bearing Load SpecC.xls, 12 March 2002) results in higher bearing lives than the most recent load duty cycle. The most recent load duty cycle method appears to be the most realistic because of the way the static turbine and generator rotor weight was addressed. As a result of using this duty cycle, no existing catalog bearings that have been analyzed to date will satisfy the target bearing life of 175,000 hours. This target bearing life was chosen to coincide with the gear lives for the baseline gearbox configuration. A preliminary AGMA/AWEA wind turbine specification lists a suggested low speed bearing life to be 100,000 hours (vs. 175,000 hours for gear life). Experience from bearing manufacturers regarding definition of actual design bearing life should be considered for these types of applications.

A direct comparison between the original load duty cycle and the most recent load duty cycle is shown below for 277000 Series two row taper roller bearing assembly. As mentioned previously, Company O is currently designing a special bearing that will give

a larger effective center than the 277000 Series bearing shown. Increased bearing span will result in lower loads and higher bearing lives.

Table 32. Original duty cycle analysis—1.5 MW direct drive integrated design

	Bearing "B"						Bearing "A"					
BS (in)	Series	Bore (in)	Po (lb)	so	P (lb)	L10 (hr)	Series	Bore (in)	Po (lb)	so	P (lb)	L10 (hr)
17	277000	45.5	1.15 E6	2.26	191,607	177,378	277000	45.5	1.10 E6	2.36	154,628	362,506

Bore = Bearing bore.
Po = Static equivalent load on bearing.
P = Dynamic equivalent load on bearing.
so = Static Safety Margin
L10 = Catalog life (90% reliability).
Abbreviations: BS, bearing span; hr, hour; in, inch; lb, pound.

Table 33. Current (revision D) duty cycle analysis—1.5 MW direct drive integrated design

	Bearing "B"						Bearing "A"					
BS (in)	Series	Bore (in)	Po (lb)	so	P (lb)	L10 (hr)	Series	Bore (in)	Po (lb)	so	P (lb)	L10 (hr)
17	277000	45.5	1.05 E6	2.47	231,366	92,385	277000	45.5	1.11 E6	2.34	180,647	210,780

Bore = Bearing bore.
Po = Static equivalent load on bearing.
P = Dynamic equivalent load on bearing.
so = Static Safety Margin
L10 = Catalog life (90% reliability).
Abbreviations: BS, bearing span; hr, hour; in, inch; lb, pound.

Company O will also be able to optimize the bearing design to include "Advanced Life" analysis (more application specific) as opposed to the standard "Catalog Life".

12 Costing and weight summaries of all designs

The following section presents all of the costs and pricing for the gearboxes.

12.1 Baseline gearbox design pricing: 1.5 MW, 72/1 ratio

The Northern baseline gearbox is the spur gear compound planetary gearbox with one stage of parallel shaft gearing as developed at Cincinnati Gear per an Enron gearbox specification. The gearbox has a 72/1 ratio with a 13.89/1 ratio in the compound planetary. The pricing was done by components and included actual pricing whenever possible. The pricing, $139,000, represented the costs to produce the unit at Cincinnati Gear with approximately a 1.25 mark-up. The weight for this baseline is 31,300 pounds.

The design is a three-point mount and requires a separate low speed shaft and a separate pillow block bearing on the low speed shaft. The gearbox must be connected to the low speed shaft that is outside of the gearbox by a shrink disc.

In the baseline design, the following items are included in the price.

Shrink disc	$3,972
Lube system	$5,758

Outside of the baseline gearbox, the following items are required to support the three point mount on the gearbox.

Main shaft	$23,400
Pillow block bearing	$15,182
Total	$38,582

The prices for these items outside of the gearbox are from the Northern report as presented on 26 March at NREL. These prices are not included in any of the gearbox pricing.

It has been reported from a reliable source that the baseline gearbox with a single stage planetary and two stages of parallel shaft gearing is available from Europe for a “street price” of $114,000. This reportedly includes shipping to the USA.

12.2 Medium-speed design: single compound planetary stage 1.5 MW, 13.89/1 ratio

Cincinnati Gear extracted data from the pricing developed for the 13.89/1 ratio spur gear compound planetary portion used in the baseline. This single compound gear stage of gearing is the medium speed gearbox. The price for the 13.89/1 ratio spur gear compound planetary gear is $122,000. This is with a 1.3 mark-up. The weight is 28,000 pounds.

For the helical 13.89/1 ratio design, Gear Consulting Services estimated the weights from the Cincinnati Gear values used for the single stage compound planetary gear by scaling each component.

The resulting weight and price are given in Table 34. Table 34 is page 5 of a summary spreadsheet that has been given to Northern. The summary spreadsheet is from a 12 page spreadsheet that was used by Gear Consulting Services.

Both of these designs are three-point mounts and each requires a separate low speed shaft and a separate pillow block bearing on the low speed shaft. The gearbox low speed shaft/carrier bearings are the same as those used in the baseline gearbox. The gearbox must be connected to the low speed shaft that is outside of the gearbox by a shrink disc. It is the same shrink disc that is used in the baseline assembly.

12.3 Medium-speed design: single compound planetary stage 3 MW

Gear Consulting Services used the Cincinnati Gear data for the 1.5 MW - 13.89/1 ratio spur gear compound planetary pricing data to project the weight and price for a 3 MW – 13.89/1 ratio spur gear compound planetary gear design by again scaling each component.

This was then used to estimate the weight and pricing for a 3 MW – 16/1 ratio spur gear compound and a 3 MW – 16/1 ratio helical gear design. Again each component was scaled.

The resulting weights and pricing are given in Table 34.

Table 34. Compound planetary weight and pricing summary

Northern Power Systems **24 Mar 02**
Compound planetary gears

Ratio	MW	Estimated mfg parts cost	Estimated total bearing cost	Shrink disk lube system assembly and misc hardware cost	Recurring trace labor cost	Estimated cost	Estimated selling price	Estimated gearbox weight (lb)	Gearbox price/lb
13.89 s	1.5	$59,455	$12,594	$18,798	$3,000	$93,847	$122,001	28,000	$4.36
13.89 h	1.5	$42,752	$12,600	$18,798	$3,000	$77,150	$100,295	21,245	$4.72
13.89 s	3	$100,472	$25,199	$28,197	$3,000	$156,868	$203,928	51,880	$3.93
16.00 s	3	$112,335	$25,199	$28,197	$3,000	$168,731	$219,350	65,192	$3.36
16.00 h	3	$82,309	$25,199	$28,197	$3,000	$138,705	$180,317	44,365	$4.06

Abbreviations: h, helical; lb, pound; mfg, manufacturing; misc, miscellaneous; MW, megawatt; s, spur.

12.4 Baseline gearbox design pricing: 3 MW, 94/1 ratio

To get the 94/1 ratio 3 MW baseline, an estimate for weight and price of the parallel shaft gearing with a 5.88/1 ratio and the related housing was added to the 16/1 ratio compound planetary gear stage that had been developed. The price is $210,459 using a helical compound planetary gear. For a spur gear planetary, the price would be $253,349. (See the revised pricing discussion in Appendix D.)

12.5 Single stage simple planetary designs: 1.5 MW, 8/1, 10/1, and 12/1 ratios

Cincinnati Gear also did estimated designs for single stage units using a simple planetary design. The ratios considered were 8/1, 10/1, and 12/1.

The Estimated Gearbox Weight and the Estimated Gearbox Cost are given in Table 35.

Table 35. Single stage simple planetary weight and pricing

Northern Power Systems **23-Jan-02**
1500 kW
Blade speed: 18.6 rpm
Single stage epicyclic estimates

Ratio	Generator speed (rpm)	Ring gear diameter (in)	Face width (in)	Estimated gearbox weight (lb)	Estimated gearbox cost (US$)
8:1	148.8	64.50	11.00	27,190	111,400
10:1	186.0	75.00	10.25	33,360	130,200
12:1	223.2	85.00	9.50	39,200	147,800

Abbreviations: in, inch; kW, kilowatt; lb, pound; rpm, rotations per minute; US, United States.

These three units are helical gear designs. Only the helical gear designs were priced since the spur gear designs were larger in size, heavier, and would have been more expensive.

12.6 Multiple generator designs

The Northern multiple generator designs were priced by Gear Consulting Services using the same scaling factors for weight and similar per pound prices that had been used to price the baseline gearbox and the medium speed compound planetary designs. Again, the units are three-point mounts with an outside low speed shaft, pillow block bearing, and shrink disc. The low speed shaft in the gearbox supports the bull gear using the same bearings as were used on the baseline design. The rational for doing this was that the rotor loads are the same for the baseline, medium speed, and multiple generator designs. Since the loads on each pinion were similar to the loads on the high speed pinion in the baseline gearbox the bearing arrangement was kept the same and the same bearing prices were used.

Gear Consulting Services ran the weights and pricing on three different multiple generator ratios, 8.0/1, 14.0/1, and 20.0/1. These results are given in Table 36. Table 36 is page 3 of a summary spreadsheet that has been given to Northern. The summary spreadsheet is from a 9 page spreadsheet that was used by Gear Consulting Services.

Table 36. Multiple generator parallel shaft weight and pricing summary

Northern Power Systems **24 Mar 2002**
1500 kW total
8:1, 14:1, and 20:1 ratios
18.6 rotor speed

Ratio	Generator rating (kW)	Number of generators	Center distance (in)	Estimated gearbox price	Total Estimated gearbox weight	Gearbox price/lb
8	250	6	31.000	$129,735	20,381	$6.37
14	250	6	42.150	$140,877	22,505	$6.26
20	250	6	52.178	$154,237	25,586	$6.03

Abbreviations: in, inch; kW, kilowatt; lb, pound.

12.7 Revised medium-speed design: single compound planetary weight and pricing

During the 26 March meeting at NREL, it noted that the prices developed for Northern were substantially higher than the prices that had been developed for Company Q by Company P. A meeting was set up between Gear Consulting Services and Company P. In addition to having a different design the dollar per pound rate for gearing and housing components was substantially different. Gear Consulting Services has recalculated the pricing using the rates in $/lb that Company P was using and rates that are an average of the Company P rates and the Cincinnati Gear rates. In addition, since the planet bearings had been estimated, actual bearings loads and lives were calculated for the planet bearing and the prices for these bearings were obtained from Company N.

For the original 13.89/1 ratio spur gear compound planetary, Cincinnati Gear had a rate of $13.68/lb for the sun pinion, $3.79/lb for the high speed planet gear, $8.00/lb for the low speed planet gear, $4.77/lb for the ring gear, $1.06/lb for the carrier, and $1.70/lb for the housing. For the other versions, Gear Consulting Services had some higher price rates since helical gears are more expensive to produce than spur gears and since higher weight parts usually have a lower $/lb rate unless they are so large that they require more expensive machinery to produce them. The rates that Gear Consulting Services used are considered to be conservative except for the carrier where the $/lb rate may actually be low. (Company P used a higher $/lb rate for carriers.) The rates that Cincinnati Gear, Gear Consulting Services, and Company P used are as shown in Table 37.

Table 37. Dollar per pound comparison for planetary gear designs

	Cincinnati Gear	GCSC	GCSC	GCSC	Company P
Ratio	13.89/1 spur	13.89/1 helical	16/1 spur	16/1 helical	8/1 double helical
Sun pinion	$13.68/lb	$17.78/lb	$9.88/lb	$10.21/lb	$5.05/lb
HS planet	$3.79/lb	$4.04/lb	$2.541/lb	$3.22/lb	$3.88/lb
LS planet	$8.00/lb	$9.33/lb	$5.36/lb	$7.46/lb	$3.88/lb
Ring gear	$4.77/lb	$5.05/lb	$3.97/lb	$4.53/lb	$3.38/lb
Carrier	$1.06/lb	$1.03/lb	$1.02/lb	$1.06/lb	$1.69/lb
Housing	$1.70/lb	$1.80/lb	$1.24/lb	$1.61/lb	$1.11/lb

Abbreviations: GCSC, Gear Consulting Services of Cincinnati; lb, pound.

For the carrier, the Company P $/lb rate is higher than the rate that GCSC used.

Gear Consulting Services revised the original 12 page spreadsheet to incorporate the new bearing prices and the new $/lb rates. Three $/lb rates were used to get three new revised prices. The first revised price uses the set of rates that Cincinnati Gear had used for the original spur compound planetary pricing. Some of the rates on selected components are lower that the rates that Gear Consulting Services originally used. The third revised price uses the set of rates that Company P used and the second revised price uses a set of rates that are an average of the first and third sets of rates.

The results of these three different price revisions are given in Table 38.

Table 38. Revised compound planetary weight and pricing summary

Northern Power Systems **6 Sep 02**
Compound planetary gears

Ratio	Rating (MW)	Est mfg parts cost	Est total bearing cost	Lube system assembly and misc hardware cost	Recurring trace labor cost	Est cost	Est selling price	Est gearbox weight (lb)	Gearbox price/lb
13.89 s	1.5	$59,455	$12,594	$18,797	$3,000	$93,846	$122,000	28,000	$4.36
13.89 h	1.5	$42,752	$12,600	$18,798	$3,000	$77,150	$100,295	21,245	$4.72
13.89 s	3	$100,335	$25,199	$28,197	$3,000	$156,731	$203,750	51,880	$3.93
16.00 s	3	$112,335	$25,199	$28,197	$3,000	$168,731	$219,350	65,192	$3.36
16.00 h	3	$82,309	$25,199	$28,197	$3,000	$138,705	$180,317	44,365	$4.06
Revised pricing #1, revised planet bearings									
13.89 s	1.5	$59,441	$14,256	$18,797	$0	$92,494	$120,242	28,000	$4.29
13.89 h	1.5	$42,763	$14,256	$18,798	$0	$75,817	$98,562	20,691	$4.76
16.00 s	3	$112,447	$31,534	$28,197	$0	$172,178	$223,831	64,877	$3.45
16.00 h	3	$82,382	$37,099	$28,197	$0	$147,678	$191,981	44,419	$4.32
Revised pricing #2, revised planet bearings, average of GCSC and Company P rates									
13.89 s	1.5	$52,622	$14,256	$18,798	$0	$85,676	$111,379	28,000	$3.98
13.89 h	1.5	$37,342	$14,256	$18,798	$0	$70,396	$91,515	20,691	$4.42
16.00 s	3	$114,671	$31,534	$28,197	$0	$174,402	$226,723	64,877	$3.49
16.00 h	3	$76,114	$37,099	$28,197	$0	$141,410	$183,833	44,419	$4.14
Revised pricing #3, revised planet bearings, Company P rates									
13.89 s	1.5	$45,804	$14,256	$18,798	$0	$78,858	$102,515	28,000	$3.66
13.89 h	1.5	$31,922	$14,256	$18,798	$0	$64,976	$84,469	20,691	$4.08
16.00 s	3	$116,846	$31,534	$28,197	$0	$176,577	$229,550	64,877	$3.54
16.00 h	3	$69,846	$37,099	$28,197	$0	$135,142	$175,685	44,419	$3.96

Abbreviations: Est, estimated; h, helical; lb, pound; mfg, manufacturing; MW, megawatt; s, spur.

The revised prices for the 3 MW designs are higher that the original prices. This is because we are using the actual planet bearing prices not estimates. The original estimates for the 1.5 MW - 13.89/1 helical unit planet bearings, and both of the 3 MW units were low. When we got the pricing from Company N, we also learned that the price for the planet bearing in the 1.5 MW - 13.89/1 spur unit had increased in price by over 30%. We are also using this new price in the revised prices.

The planet bearings for the original 1.5 MW - 13.89/1 spur unit were based on the duty cycle. The first set of calculations for the actual planet bearings in the 1.5 MW - 13.89/1 ratio helical unit and both of the 3 MW units were based on the nominal rating. This gave larger bearings than are required to meet the life requirements when the duty cycle is used. We have resized the planet bearings in these three units.

Per Company N, these three bearings meet the requirements that are being put into the revised AGMA/AWEA Wind Turbine Gear Standard.

Since the blade loads on the input shaft are still being revised, no change was made to the carrier bearings in the 1.5 MW units and no change was made to the estimates for the Carrier bearings in the 3 MW units.

All of the designs still utilize the three-point mount for the gearbox and require a shrink disc, low speed shaft, and pillow block bearing.

It is the opinion of Gear Consulting Services of Cincinnati, LLC that the pricing given in the section titled Revised Pricing #2 in Table 38 above is a realistic pricing summary and could be met by getting quotations from several sources for the gearing, carrier, and housing. It is felt that some foreign sources may be required.

12.8 Revised single stage simple planetary designs

These are only for 1.5 MW designs. The prices are for only the helical designs. The prices were developed using the $/lb rates that Cincinnati Gear was using on the 13.89/1 spur compound planetary. All of the units have the same estimated planet bearing price. The price for the planet bearings should probably be higher. Looking at the revised pricing for the compound planetary units in Table 38 for the 1.5 MW units shows that the revised prices are 9% lower than the original prices when the rates were adjusted and the planet bearing prices were increased. This indicates that the original estimated prices given by Cincinnati Gear could be reduced by about 9%. Using this estimate, the revised pricing for the Simple Single Stage Planetary designs would be as is given in Table 39.

Table 39. Revised single stage simple planetary weight and pricing summary

Northern Power Systems **27 Sep 02**
1500 kW
Helical gearing
Blade speed: 18.6 rpm
Single stage epicyclic estimates

Ratio	Generator speed (rpm)	Ring gear diameter (in)	Face width (in)	Estimated gearbox weight (lb)	Estimated gearbox cost (US$)
8:1	148.8	64.50	11.00	27,190	101,500
10:1	186.0	75.00	10.25	33,360	118,500
12:1	223.2	85.00	9.50	39,200	134,500

Abbreviations: in, inch; kW, kilowatt; lb, pound; rpm, rotations per minute; US, United States.

There would be no change in the Estimated Gearbox Weight.

12.9 Revised multiple generator designs weights and pricing

Again, there was a significant difference in the dollar per pound rates for the gearing and housing components. Also again, Gear Consulting Services has recalculated the pricing for the 14/1 and 20/1 ratio designs using the rates in $/lb that Company P was using and rates that are an average of the Company P rates and the Cincinnati Gear rates.

For the 8/1 ratio unit, Cincinnati Gear had a rate of $8.12/lb for the pinions, $4.52/lb for the gear, and $1.70/lb for the housing. In the original pricing estimates, Gear Consulting Services used higher rates since the pinions would be smaller and the gear and housing would be larger. The rates that Gear Consulting Services used were considered to be conservative. The rates that Cincinnati Gear, Gear Consulting Services, and Company P used are given in Table 40.

Table 40. Dollar per pound comparison for parallel shaft designs

	Cincinnati Gear	GCSC	GCSC	GCSC	Company P
Ratio	8/1	8/1	14/1	20/1	15.9/1
Pinion	$8.12/lb	$8.12/lb	$8.53/lb	$8.93/lb	$3.78/lb
Gear	$4.52/lb	$4.52/lb	$5.52/lb	$5.77/lb	$3.77/lb
Housing	$1.70/lb	$1.80/lb	$1.80/lb	$1.80/lb	$1.14/lb

Abbreviations: GCSC, Gear Consulting Services of Cincinnati; lb, pound.

Since the original weight and price estimates were based on scaled output pinion weights, the actual output pinion weights were calculated and found to be less than the estimated weights. Also a new bearing arrangement was designed for the output pinions. Instead of two radial roller bearings and a four point ball thrust bearing, tapered roller bearings are now being used. These designs are less expensive.

Here, Gear Consulting Services revised the original 9 page spreadsheet incorporating the new output pinion weights, the new pinion bearing arrangement cost, and new $/lb rates. Three $/lb rates were used to get three new revised prices. The first revised price uses the set of rates that Cincinnati Gear used for the 8/1 ratio. These rates are lower that the rates that Gear Consulting Services originally used. The third revised price uses the set of rates that Company P used and the second revised price uses a set of rates that are an average of the first and third sets of rates.

Table 41. Revised multiple generator parallel shaft weight and pricing summary

Northern Power Systems **5 Sep 02**
1500 kW total
Six generators
250 kW generator rating

Ratio	Center distance (in)	Estimated gearbox price	Estimated gearbox weight (lb)	Estimated gearbox price/lb
8	31.000	$129,735	20,381	$6.37
14	42.150	$140,877	22,504	$6.26
20	52.178	$154,237	25,586	$6.03
Revised pricing #1, new pinion bearings, new pinion weight, Cincinnati Gear 8/1 ratio $/lb rate				
14	42.150	$114,331	21,551	$4.97
20	52.178	$123,900	24,682	$4.69
Revised pricing #2, new pinion bearings, new pinion weight, average Cincinnati Gear and Company P $/lb rate				
14	42.150	$107,249	21,561	$4.97
20	52.178	$115,835	24,682	$4.69
Revised pricing #3, new pinion bearings, new pinion weight, Company P $/lb rate				
14	42.150	$100,167	21,561	$4.65
20	52.178	$107,770	24,682	$4.37

Abbreviations: in, inch; kW, kilowatt; lb, pound; mfg, manufacturing; MW, megawatt.

Again since the blade loads on the input shaft are still being revised, no change was made to the carrier bearings in the 1.5 MW units and no change was made to the estimates for the carrier bearings in the 3 MW units.

Similarly, all of the designs still utilize the three-point mount for the gearbox and require a shrink disc, low speed shaft, and pillow block bearing.

Again, it is the opinion of Gear Consulting Services of Cincinnati, LLC that the pricing given in the section titled Revised Pricing #2 in Table 41 above is a realistic pricing summary and could be met by getting quotations from several sources for the gearing, carrier, and housing. It is felt that some foreign sources may be required.

12.10 Integrated bearing designs

All of the above weight and pricing data are for units that have a three-point mounting arrangement. Going to an integral design on each arrangement would eliminate the shrink disc which is included in the gearbox weights and prices and would eliminate the low speed shaft and pillow block bearing that are required for the three-point mount but are not included in the gearbox weights and prices.

Table 31 gives the carrier bearing prices for various arrangements that GCSC considered.

This data is probably not current, as GCSC has been advised by Company O that the duty cycle for the rotor loads on the shaft of the gearbox is changing.

With a straddle bearing arrangement, the main difference within the gearbox would be the difference in the carrier or low speed gear shaft bearings and the elimination of the shrink disc.

With an overhung mount arrangement, there would still be a difference within the gearbox for the carrier or low speed gear shaft bearings and the elimination of the shrink disc, but there would also be an increase in the weight of the carrier input shaft extension or the longer low speed gear shaft and the increase in weight for the housing that is required to accommodate the carrier extension or the low speed gear shaft extension.

To help in determining the new weights and prices for integral bearing designs, the data in Table 42 will be helpful.

Table 42. Selected compound planetary pricing items

Compound planetary gears **9 Sep 02**
Revised pricing #2

Ratio	Rate (MW)	Estimated selling price	Estimated gearbox weight (lb)	Estimated carrier bearings cost	Estimated carrier bearings weight (lb)	Estimated carrier weight (lb)	Estimated housing weight (lb)
13.89 s	1.5	$111,379	28,000	$7,296	1,031	6,644	9,395
13.89 h	1.5	$91,515	20,691	$7,296	1,031	5,414	6,039
16.00 s	3	$226,723	64,877	$14,596	2,062	12,211	25,876
16.00 h	3	$183,833	44,419	$14,596	2,062	8,929	16,636

Abbreviations: h, helical; lb, pound; s, spur.

The Estimated Selling Prices given in Table 42 are the Estimated Selling Prices under Revised Pricing #2 in Table 38. These prices include the carrier bearings that are required when the unit has a three-point mount arrangement. They also include a 1.3 mark-up.

These prices also include the price for the shrink disc. The prices for the shrink disc are $3,972 for units rated at 1.5 MW and $5,958 for units rated at 3 MW.

Once you get your final integral bearing sizes and pricing you can develop a price for the compound planetary medium speed integral bearing design by taking the Estimated Selling Price and deducting the Estimated Carrier Bearing Cost and the shrink disc price from it and adding the cost of the new integral bearings. No shrink disc is required in an integrated bearing design.

You must also compare the weights of the carrier and the housing with the integral bearings to the weights of the carrier and housing that are given in Table 42.

It is felt by Gear Consulting Services that any increase in the weights for the carrier and the housing could be taken into account by multiplying the difference in the weights by a rate of $1.00 per pound.

The weight estimates can probably be obtained from the solid models that Northern has developed.

The estimated cost of the increase in weight going from the original design to the integral bearing design can be covered by adding the increase in weight as a dollar item, $1.00/pound. This would be in addition to adding the difference in the prices for the carrier bearings going from the three-point mount carrier bearings to the new integral bearings.

You can estimate the weights of the integral bearing compound planetary designs by subtracting the Estimate Carrier Bearing Weight from the Estimated Gearbox Weight and adding the weight of the integral bearings in its place. You must also add on any increase in weight for the carrier and housing when going from the original design to the integral bearing design. You can also subtract the weight for the shrink disc. The weights for the shrink disc are 2,479 lb for units rated for 1.5 MW and 3,719 lb for units rated at 3 MW.

The result will be a new price and weight for each of the integral bearing compound planetary designs.

Table 43. Selected multiple generator parallel shaft pricing items

Northern Power Systems
1500 kW total
Six generators
250 kW generator rating

Revised pricing #2

Ratio	Estimated selling price	Estimated gearbox weight (lb)	Estimated low-speed bearings cost	Estimated low-speed bearings weight (lb)	Estimated low-speed shaft weight (lb)	Estimated housing weight (lb)
14	$107,249	21,561	$7,296	1,031	2,158	9,145
20	$115,835	24,682	$7,296	1,031	2,158	11,185

Abbreviations: kW, kilowatt; lb, pound.

The Estimated Selling Prices given in Table 43 are the Estimated Selling Prices under the Revised Pricing #2 in Table 41. These prices include the low speed shaft bearings that are required when the unit has a three-point mount arrangement. A 1.3 mark-up is included. These prices also include the shrink disc. Here, the shrink disc is the one rated for 1.5 MW and has a price of $3,972.

On the multiple generator parallel shaft units, when you get your final integral bearing sizes and pricing you can develop a price for these units as integral bearing designs by taking the Estimated Selling Price and deducting the Estimated Low Speed Bearing Cost and the shrink disc price from it and adding the cost of the new integral bearings.

You must also compare the weights of the low speed shaft and the housing with the integral bearings to the weights of the low speed shaft and housing that are in Table 43.

It is felt by Gear Consulting Services that any increase in the weights for the low speed shaft and the housing could be taken into account by multiplying the difference in the weights by a rate of $1.00 per pound.

The estimated cost of the increase in weight going from the original design to the integral bearing design can be covered by adding the increase in weight as a dollar item, $1.00/pound, to the price that was adjusted to cover the new integral bearings. This would be in addition to adding the difference in the prices for the low speed gear shaft bearings going from a three point mount low speed shaft mount to the new integral bearings.

Here also, the weight estimates can probably be obtained from the solid models that Northern has developed. Since these designs may use a straddle mounted integral bearing arrangement, the increase in weight for the low speed shaft and the housing may be small.

You can also estimate the weights of the integral bearing multiple generator parallel shaft units by subtracting the Estimate Low Speed Bearing Weight and the shrink disc weight, 2,479 lb, from the Estimated Gearbox Weight and adding the weight of the integral bearings.

You must also add on any increase in weight for the low speed shaft and housing when going from the original design to the integral bearing design.

Here, you will also get a new price and weight for each of the integral bearing multiple generator parallel shaft designs.

Appendix A: Formulas

Basis for Bearing Reaction (R_A, R_B) Calculations

a = distance from rotor load application point to rotor end bearing (B).

b = bearing span (BS) between rotor end bearing (B) and generator end bearing (A)

c = distance from generator end bearing (A) to generator CG (Fz2).

Bearing "B" = turbine rotor end bearing.

Bearing "A" = Generator end bearing

$R_{Bx} = Fx$

$R_{Az} = M_y/b + F_{z1}(a/b) - F_{z2}(b+c)/b$: If $F_{z1} = F_{z2} = 0$ Then $R_{Az} = M_y/b$

$R_{Ay} = -M_z/b + F_y(a/b)$: If $F_z = 0$ and $M_z = 0$ Then $R_{Ay} = 0$

$R_A = (R_{Ay}\text{^}2 + R_{Az}\text{^}2)\ \text{^}.5$

$R_{Bz} = -M_y/b - F_{z1}(a+b)/b + F_{z2}(c/b)$: If $F_{z1} = F_{z2} = 0$ Then $R_{Bz} = -M_y/b$

$R_{By} = F_y(a+b)/b + M_z/b$: If $F_y = 0$ and $M_z = 0$ Then $R_{By} = 0$

$R_B = (R_{By}\text{^}2 + R_{Bz}\text{^}2)\ \text{^}.5$

Basis for 10/3 mean Bearing Reaction Values

$R^{10/3}\text{mean} = \{\Sigma(n_1 * R_1^{10/3} + n_2 * R_2^{10/3} + \ldots n_n * R_n^{10/3}) / \Sigma(n_1 + n_2 + \ldots n_n)\}^{3/10}$

Where:n = cycles
R = Reaction load

$RPM_{avg} = (\Sigma(n_1 + n_2 + \ldots n_n) / \Sigma(T_1 + T_2 + \ldots T_n)) * (\text{hour} / 60 \text{ minutes})$

Where:n = cycles
T = hours

Basis for "Weighted" life (Miner's Rule Analysis)

Weighted Life = $\{\Sigma (T_1 + T_2 + \ldots T_n) / \Sigma(T_1/L_1 + T_2/L2_2 + \ldots Tn/Ln)\}$

Where T = time in hours at a particular load
L = life in hours at a particular load

Basis for Bearing Life Calculations

F_{ra} = Radial load on Bearing (A) = R_A
F_{rb} = Radial load on Bearing (B) = R_B
K_a = Axial load towards Bearing (B) = R_{Bx}

F_{aa} = Axial load acting on Bearing (A)

F_{ab} = Axial load acting on Bearing (B)

P_a = Dynamic equivalent load on bearing (A)

P_b = Dynamic equivalent load on bearing (B)

L_a = Life of Bearing (A) = $(C/ P_a)^{10/3} * 1\ E6$ (cycles)

C = Basic Dynamic Load Rating

L_b = Life of Bearing (B) = $(C/ P_b)^{10/3} * 1\ E6$ (cycles)

All bearing analysis utilize SKF formulas and variable descriptions.

Appendix B: Static and dynamic analysis summaries

Static & Dynamic Load Case Summary

Load Case	Description	Rpt. Ref. Para.	Brg(B)/Brg(A	a	b	c
1	1.5MW Gearbox Straddle	12.2.2.1	168/143	9	48	0
2	1.5MW Gearbox Straddle	12.2.2.1	157/243	9	48	0
3	1.5MW Gearbox Overhung	12.2.2.2	277/277	10	17	0
4	3.0MW Gearbox Straddle	12.2.3.1	277/1834	25.8	63.4	0
5	3.0MW Gearbox Straddle	12.2.3.1	277/168	25.8	67.2	0
6	3.0MW Gearbox Overhung	12.2.3.2	277/277	25.8	16.9	0
7	3.0MW Gearbox Overhung	12.2.3.2	299/299	21.6	25.3	0
8	1.5MW Direct Drive Overhung	12.3.2.1	277/277	42.7	17	15.1
9	1.5MW Direct Drive Overhung	12.3.2.1	Flange/Flange	34.33	33.74	6.73
10	1.5MW Direct Drive Overhung	12.3.2.1	299/299	38.58	25.25	11
11	1.5MW Direct Drive Overhung	12.3.2.1	Special/Spec.	27.57	47.25	0
12	Orig. Duty Cycle	12.5	277/277	10	17	0
13	Rev D Duty Cycle	12.5	277/277	42.7	17	15.1

a = distance from rotor load application point to rotor end bearing (B).
b = bearing span (BS) between rotor end bearing (B) and generator end bearing (A).
c = distance from generator end bearing (A) to generator CG (Fz2).

Static Bearing Analysis

Load Data (inches, pounds)

Load Case	Fx	Fy	Fz1	Fz2	Mx	My	Mz	Rb	Ra	Rbx
1	8614	-67105	-80976	0	10031060	-17313884	47891	463935	376134	8614
2	8614	-67105	-80976	0	10031060	-17313884	47891	463935	376134	8614
3	8614	-67105	-80976	0	10031060	-17313884	47891	1152277	1066935	8614
4	154893	0	0	0	0	44324535	0	699125	699125	154893
5	154893	0	0	0	0	44324535	0	659591	659591	154893
6	154893	0	0	0	0	44324535	0	2622754	2622754	154893
7	154893	0	0	0	0	44324535	0	1751958	1751958	154893
8	6294	-6969	-80029	0	0	16639880	-13781007	1051170	1110879	6294
9	6294	-6969	-80029	0	0	16639880	-13781007	515345	575001	6294
10	6294	-6969	-80029	0	0	16639880	-13781007	698235	757921	6294
11	6294	-6969	-80029	0	0	16639880	-13781007	359965	419551	6294
12	8614	-67105	-80976	0	10031060	-17313884	47891	1152277	1066935	8614
13	6294	-6969	-80029	0	0	16639880	-13781007	1051170	1110879	6294

Dynamic Bearing Analysis

Load Data (inches, pounds)

Load Case	RPM	a	b	c	Rb(mean)	Ra(mean)	Rbx(mean)
1	15.77	9	48	0	54764	54764	32372
2	15.77	9	48	0	54764	54764	32372
3	15.77	10	17	0	154628	154628	32372
4	12.97	25.8	63.4	0	101794	101794	57962
5	12.97	25.8	67.2	0	96038	96038	57962
6	12.97	25.8	16.9	0	381880	381880	57962
7	12.97	21.6	25.3	0	255090	255090	57962
8	16.15	42.7	17	15.1	226700	180647	31088
9	16.15	34.33	33.74	6.73	130285	87695	31088
10	16.15	38.58	25.25	11	162871	118318	31088
11	16.15	27.57	47.25	0	103111	64112	31088
12	15.77	10	17	0	154628	154628	32372
13	16.15	42.7	17	15.1	226700	180647	31088

Basis for 3.0 MW Dynamic Loading

Fx (mean) = 689 (144/385) = 258 kN

Where:144 kN is 1.5 MW 10/3 mean value of Fx
385 kN is 1.5 MW extreme value of Fx
689 kN is 3.0 MW extreme value of Fx

My (mean) = 5008 (297/2035) = 731 kNm

Where:297 kNm is 1.5 MW 10/3 mean value of My
2035 kNm is 1.5 MW extreme value of My
5008 kNm is 3.0 MW extreme value of My

Average Speed (RPM) = 15.77 (15.3/18.6) = 12.97 RPM

Where:15.3 RPM is the design speed for the 3.0 MW turbine
18.6 RPM is the design speed for the 1.5 MW turbine
15.77 RPM is the average speed for the 1/5 MW turbine

Appendix C: Bearing data

Individual Bearing Pricing / Capacity Information

Bearing Series	Price	Bore (inches)	C_o (Lbs.)	C (Lbs.)
157000	$15,137	33.75	1,650,000	632,000
168000	$13,008	40.0	1,690,000	618,000
277000	$18,870	45.5	2,600,000	891,000
243000	$4,842	19.0	821,000	323,500
183400	$5,594	30.0	1,370,000	632,000
Flange Brg.	$29,000	44.5	1,370,000	432,000
299000	$55,230	61.5	37,716,000	997,000
Special	??	44.5	1,370,000	432,000
NJ29/710	$6952	28.0	1,753,440	769,000
NJ1096	$2560	18.9	825,016	448,000

Notes:

1. Pricing is ROM(Rough Order of Magnitude) for 360 quantity.
2. C_o = Static Equivalent Load Capacity
3. C = Dynamic Equivalent Load Capacity (Based on SKF rating formula)
4. $C_{SKF} = C_{Timken} * 3.8565$ (Normalized for 1,000,000 cycles)

Bearing Dimensional Data

Part #	Y	C	Effective Center in Back to Back Arrangement (inches)
168000	1.2	618,000	-
157000	1.05	632,000	-
277000	1.62	891,000	17
299000	1.23	997,000	25.25
Flange	0.67	432,000	33.74
Special	0.5	432,000	47.25

Notes:

1. $Y_{SKF} = K_{Timken}$

Appendix D: Engineering memos

From: Octave LaBath [octave@fuse.net]
Sent: Thursday, December 05, 2002 11:38 AM
To: gbywaters@northernpower.com
Subject: New duty cycle and Hours estimate

Dear Garrett,

We have used your new duty cycle to calculate the lives for the 16/1 ratio UMW compound planetary helical design. We only did the helical design since your e-mail of yesterday only mentioned the helical designs.

Attached to this e-mail is a spread sheet that gives the lives that were calculated and for the gearing and for the planet bearings using the new duty cycle and compares the results to the lives we calculated earlier using the original duty cycle.

The minimum life calculated is for the ring gear in contact. The calculated life is 138,000 hours. This is very close to the operating life of 147,034 hours. I also ran the low speed mesh with an increase in face width, 12.5 versus 12.0 inches. The calculated life with the increased face width is 176,000 hours. A .5 inch increase in the face width for the low speed planet-ring gear mesh will have minimum effect on the pricing. We would consider the slight increase in price for this change to be insignificant on the overall price for the gearbox.

The calculated Basic L10 life on the planet bearings with the new duty cycle is 97,270 hours. This is very close to the required Basic L10 life, 100,000 hours, in the new AGMA/AWEA Wind Turbine Gearbox standard. For the original spur gear 16/1 ratio planet gears, we had calculated a Basic L10 life of 85,284 hours. Company N calculated the life, using their life adjustment factors, at 142,000 hours. This is an increase of 66% compared to the Basic L10 life. Using this same increase, we estimate the Company N life for the new duty cycle to be 162,000 hours. Previously, Company N advised that the planet bearings met the new AGMA/AWEA requirements with the calculated Basic L10 life of 85,284 hours. Based on this fact, it is our conclusion that the planets bearings meet the AGMA/AWEA requirements for the new duty cycle.

Based on the above discussion, we do not feel that any change to the 16/1 ratio compound planetary is needed.

Sincerely,

Octave
Octave A. LaBath, PE
Gear consulting Services of Cincinnati, L

From: Octave LaBath [octave@fuse.net]
Sent: Tuesday, November 19, 2002 11:00 PM
To: Garrett Bywaters
Subject: Re: 94:1 Gearbox weight

Garrett,

I also could not find the weight for the 94:1 ratio in the report or Appendix D.

The total price on the 94:1 ratio gearboxes is given on page 3 of Appendix D. The prices and weights for the 16:1 compound planetary are given on page 2 of Appendix D. These 16:1 ratio section prices and weights for the compound planetary are from a spreadsheet dated 18 March 2002.

I have not been able to find the price and weights for the 5.88:1 parallel shaft portion of the 94:1 ratio gearbox. They are not on any spreadsheets that still reside in my computer files.

We can calculate the pricing for the parallel shaft portion by subtracting the 16:1 compound planetary prices from the 94:1 ratio prices. The parallel shaft portion has a price of $32,650. Reviewing the $/# rates for parallel shaft gearing in the March 2002 time frame, we found an average price of $6.315 per pound for the parallel shaft assembly in this size range including the housing. Using this information, we estimate the 5.88:1 parallel shaft portion to have a weight of 5,170 pounds.

On page 6 of Appendix D, we have revised prices and weights for the 16:1 compound planetary sections. This is from a spreadsheet date 5 September. In this September time frame, we were using a price rate of $5.15 per pound for parallel shaft gearbox designs in this size range. Using this price rate for the parallel shaft sections and the revised prices and weights for the 16:1 compound planetary sections, we get new prices for the 94:1 ratio gearbox. The new prices and weights are as follows:

- Spur Compound Planetary - $253,349 and 70,047 pounds.
- Helical Compound Planetary - $210,349 and 49,589 pounds.

The calculating logic is given in the attached spreadsheet.

It may be possible for me to look in all of the files that have been put away and find the source of the pricing that is given on page 3 of Appendix D but I doubt if this is worth the time and effort it would take. I feel that the weight estimate for the parallel shaft section is within 10% of what we would eventually find and since the weight of the parallel section is 10% of the total weight, the 10% variable would only be 1% or 2% of the final weight and price.

I hope this meets with your approval.

If you have any questions and/or comments, please call me at (513) 791-5124.

Please advise how you want us to present this information in our report. We can revise Appendix D. We would add a section giving the revised pricing for the 94/1 ratio and include the weights.

Thank you.

Sincerely,

Octave A. LaBath, PE
Gear Consulting Services of Cincinnati, LLC

From NPS 94 Ratio Weight Revised Price.xls:

Northern Power 94/1 Weight
3.0 MW 19-Nov-02
16/1 compound planetary and 5.88/1 parallel shaft

Appendix D-Rev1
Original Pricing
18-Mar-02

page		94/1 ratio price	page	16/1 ratio price	weight	calculated 5.88/1 ratio price	calculated estimated weight	
3	spur	$252,000	2	$219,350	65,192 #	$32,650	5,170 #	Using $6.315
	helical	$213,000		$180,317	44,365 #	$32,683	5,175 #	

Revised Pricing #2
Appendix D-Rev1

	page	16/1 ratio price	weight
spur	6	$226,723	64,877 #
helical		$183,833	44,419 #

Revised Pricing and Weight
Not in Appendix D-Rev1

	page	16/1 ratio price	weight	new 5.88/1 ratio price	weight	new 94/1 ratio price	weight
spur	6	$226,723	64,877 #	$26,626	5,170 #	$253,349	70,047 #
helical		$183,833	44,419 #	$26,626	5,170 #	$210,459	49,589 #

Using $5.15 per pound

Octave A. LaBath. PE
Gear Consulting Services of Cincinnati, LLC

Appendix I:

WindPACT Advanced Drive Train Study

Final Study Design Report

Operation and Maintenance Analysis

Report to: Northern Power Systems

February 13, 2003

Report prepared by: TIAX LLC
Reference: D0169

Table of Contents

TABLE OF CONTENTS ..... **I**

LIST OF EXHIBITS ..... **II**

1. INTRODUCTION **1**

2. APPROACH **3**

2.1. OVERVIEW 3
2.1.1. Assumptions *3*
2.1.2. Parameters *4*
2.1.3. Calculations *4*
2.2. GENERIC PARAMETERS 4
2.2.1. Table Headings *6*
2.2.2. Parameter Descriptions *6*
2.3. DESIGN AND RATING SPECIFIC PARAMETERS 7
2.3.1. Failure Rate Factoring *12*

3. RESULTS **14**

3.1. O&M COST 14

4. SENSITIVITY ANALYSES **17**

5. CONCLUSIONS **20**

6. APPENDIX 1: O&M COST ANALYSIS WORKBOOK USER GUIDE **21**

7. APPENDIX 2: UNSCHEDULED 1.5 MW AND 3.0 MW CASE INPUTS **24**

8. APPENDIX 3: RESULTS **32**

9. APPENDIX 4: ERLANG C MULTI-SERVER QUEUING MODEL **41**

10. APPENDIX 5: UNSCHEDULED MAINTENANCE, CREW AND EQUIPMENT WAITING TIME ANALYSIS METHODOLOGY **43**

List of Exhibits

Exhibit 2.2.1: Illustrative Generic Parameter Entries……2-3
Exhibit 2.3.1: Illustrative Scheduled Labor Parameter Entries…… 2-6
Exhibit 2.3.2: Illustrative Unscheduled Labor Parameter Entries……..… 2-6
Exhibit 2.3.3: Illustrative 1.5 MW Baseline Case Support Equipment ……2-7
Exhibit 2.3.4: Illustrative 2.5 MW Baseline Scheduled Maintenance Materials Utilization Assumptions……..……2-8
Exhibit 2.3.5: Illustrative Unscheduled Materials Cost Entries for a 1.5 MW Baseline Drive Train……...2-9
Exhibit 2.3.6: Failure Rate Comparison – Baseline……..2-10
Exhibit 2.3.7: Factoring of Baseline Generator Failure Rate to Estimate Rates for Other Designs……2-11
Exhibit 2.3.8: Factoring of Baseline Main Bearing, Gearbox and Generator Failure Rates…….2-11
Exhibit 3.1.1: Illustrative Results for Seven Design Rating Cases……3-1
Exhibit 3.1.2: 1.5 MW Baseline O&M Cost Centers…… 3-2
Exhibit 3.2.1: Impact of Unscheduled Maintenance Crew Loading on Availability Loss……3-3
Exhibit 4.0.1: Sensitivity Analysis Results…….……. 4-2
Exhibit 4.0.2: Sensitivity Results – O&M Cost Increases (cents/kWh) Due to 25% Higher Factors…… 4-3
Exhibit 4.0.3: Sensitivity Results – O&M Cost Decreases (cents/kWh) Due to 25% Lower Factors……4-4

1. Introduction

TIAX and NPS performed a comprehensive analysis of the operations and maintenance (O&M) costs for all seven of the turbine design configurations. The operations costs, scheduled maintenance costs, and unscheduled maintenance costs were summed to yield the estimated annual operation and maintenance cost (AOM), an important component of the total cost of energy (COE).

An O&M Cost Analysis Workbook was created using Microsoft® Excel®. The workbook provided a convenient approach to analyzing multiple cases using built-in macros to quickly evaluate the sensitivity of the resulting COE to changes in input data.

General assumptions were made for all of the drive train configurations. Examples of the general assumptions include:

- 100 MW wind farm
- Full time maintenance crew
- Plant life of 20 years

Additional input data, specific to each drive train configuration, was prepared. Examples of the specific assumptions include:

- Component costs
- Component failure rates
- Mean time to repair

The input data was then used to calculate the O&M costs for different cost categories. Examples of the cost categories include:

- Unscheduled and scheduled materials
- Unscheduled and scheduled labor
- Unscheduled materials inventory

The special features of the analysis included:

- Levelized replacement cost (LRC) components were determined using a net present value (NPV) analysis with an assumed discount rate.

- Spares inventory depth and cost were determined using an Erlang C model which is an established approach to queuing analysis.

- Crew and equipment waiting time were estimated by using a single server queue analysis.

- Sensitivity calculations were performed to evaluate the difference in O&M cost for a +/- 25% change in key input parameters.

Plant availability was evaluated for each case. This evaluation included the impact of delay in starting unscheduled maintenance actions determined by use of a single-server queuing model to estimate the average waiting time for crew and equipment.

The details of the O&M approach, results, discussion, and conclusions are presented in the following sections. A user's guide to the workbook is given in Appendix 1. The input and results for the seven drive train configurations are given in Appendix 2 and C, respectively. A description of the spares inventory depth analysis with the Erlang C model is given in Appendix 4. The crew and equipment waiting time analysis using a single server queuing model is described in Appendix 5.

2. Approach

2.1. Overview

2.1.1. Assumptions

Operations and Maintenance (O&M) cost for each drive train and power rating configuration was estimated by a detailed approach which assumed the following five O&M cost components to determine the total:

- **Labor**
  a) Full-time, unscheduled maintenance crew
  b) Full-time, scheduled maintenance crew
  c) Operations manager and assistant

- **Supporting equipment**
  a) Small cranes, flatbed trucks, pickup trucks
  b) Large cranes – specific to drive train design and rating

- **Replacement of minor components**
  a) Generator slip ring brushes, brake pads, etc.

- **Repair of major components**
  a) Gearbox, generator, etc.

- **Inventory of spare components**
  a) Depth sufficient to assure timely availability
  b) Initial cost of spares based on estimated factory cost and assumed markup factor
  c) Impact of initial cost on COE based on same fixed charge rate method used for turbine
  d) New or repaired components required to maintain inventory stocking levels are the Levelized Replacement Cost (LRC) items identified in previous NREL cost analyses
  e) LRC component cost impact on COE determined by Net Present Value (NPV) analysis

For the 100 MW plant considered in this study, it was assumed that a single unscheduled maintenance crew and suite of supporting equipment would be sufficient to accommodate the work load. We also assumed an acceptable number of jobs in the queue to avoid excessive turbine down time due to delay in starting a repair action. This important assumption is tested by using a "single server" (i.e., single crew and equipment set) queuing model to estimate the average waiting time. Typical cases demonstrate that a single crew and support equipment set is sufficient to achieve acceptable waiting time and consequent loss of availability.

It should be noted that plants which present a heavier unscheduled maintenance work load – i.e., those employing less reliable turbines and/or more turbines -- may require more than one crew and support equipment to achieve acceptable service waiting times. In such cases waiting time analysis would require use of a "multi-server" queuing model.

2.1.2. Parameters

The procedure is applicable to any wind turbine system of any power rating for which O&M cost driving parameters can be identified. Some parameters are generic to any design or power rating and fall in the following categories:

- Plant size and performance
- Labor and overhead rates
- Scheduled maintenance materials costs
- Generic support equipment costs
- G&A costs
- Financial factors
- Unscheduled repair response time factors

Other parameters are design or rating specific and fall into the following categories:

- Component failure rates
- Spare or rebuilt component costs
- Spare or rebuilt component replenishment lead times
- Unscheduled repair crew time
- Cost of design or rating specific support equipment

Descriptions of each of these categories are provided below.

2.1.3. Calculations

Most of the calculations required to estimate the O&M cost components were based on simple formulas. However, more elaborate analysis procedures were employed for other purposes. For example, a multi-server Erlang C queuing method was employed to estimate the depth of spares inventory required to meet objectives defining acceptable delay in availability of spares. A single server queuing model was used to estimate the delay in availability of a crew to being able to work on an unscheduled maintenance task. Both spare delivery and crew availability delays can contribute significant loss of availability, but maintenance of excessive spares inventory and maintenance overstaffing also have negative impacts on the total O&M cost. The queuing theory-based estimates of these delays and the computed impact on plant availability enabled us to confirm that assumed staffing and inventory depths were sufficient to meet the availability goal. These queuing analyses are described below.

2.2. Generic Parameters

Parameters not specific to a particular drive train design or power rating were entered into highlighted locations in the User Inputs column on the Generic tab of the Excel workbook depicted in Exhibit 2.2.1.

Plant Parameter	Par. Name	Constants	User Inputs	Results	Units	Note
Plant Power Rating	Prating		100		MW	
Number of 1.5 MW Turbines	QTY1.5			67	Units	
Number of 3.0 MW turbines	QTY3.0			34	Units	
Average Annual Calendar Hours	AAH	8,766			h	
1.5 MW Unit Plant Capacity Factor	CF1.5		0.372		pu	
1.5 MW Annual Energy Production	AEP1.5			3.26E+08	KWh	
3.0 MW Unit Plant Capacity Factor	CF3.0		0.400		pu	
3.0 MW Annual Energy production	AEP3.0			3.51E+08	KWh	
1.5 MW Unit Annual Operating Hours	AOH1.5		7,040		h	9
3.0 MW Unit Annual Operating Hours	AOH3.0		7,474		h	9
Labor Rates						
Crane Operator	COrate		35		$/h	
Senior Technician	STrate		25		$/h	
Junior Technician	JRrate		15		$/h	
Site Manager	SMrate		30		$/h	
Manager Assistant	MArate		15		$/h	
Overhead	OHrate		0.5		Pu	
Annual Work Hours	AWH		2,000		H	
Scheduled Maintenance Cost Data (Brake pad cost entered on worksheet for each specific design)						
Gearbox Oil			20.00		$/gal	20
Oil Filters			160.00		$/filter	21
Air Filters			50.00		$/filter	
Grease			0.05		$/oz	23
Generator (baseline slip ring brushes)			500.00		$/set	24
Hub Power Brushes			100.00		$/set	25
Hydraulic Fluid			5.00		$/quart	
Equipment Fuel			1.40		$/gal	
Hazardous Waste Disposal			2.00		$/gal	27
OEM Markup						
Material Cost Markup Factor	MATmu		1.5		Pu	
Equipment Purchase and Maintenance Costs (Large crane cost entered on worksheet for each specific design)						
Small Crane	Smcrane		1,000,000		$	
Tractor	Tractorcost		20,000		$	
Flatbed Trailer	Trailercost		70,000		$	
Pickup Truck (each)	Pickupcost		30,000		$	
Annual Equipment Maintenance Rate	Emrate		0.030		Pu	

Exhibit 2.2.1 – Illustrative Generic Parameter Entries (continued)

G&A Costs						
Operations Manager Burdened Labor				90,000	$	
Operations Assistant Burdened Labor				45,000	$	
Accounting, Payroll, Legal Services			10,000		$	
Telephone, ISP, Heat, Power			10,000		$	
Fire, Theft, Vehicle, Liability Insurance			20,000		$	
Miscellaneous			10,000		$	
Total				**185,000**		
Net Present Value (NPV) Analysis (of Unscheduled Maintenance Costs)						
Discount Rate	DR		0.1		Pu	
Plant Life	PL		20		Y	
NPV of Fixed Annual Expense/Plant Life	NPVF			0.43	$/$/y	
Financing of Initial Spares Inventory and Maintenance Equipment Costs						
Fixed Charge Rate	FCR		0.1065		$/y per $	16
Spare Component Inventory Levels						
Acceptable Availability Delay			1		d	28
Spare Available Percent of Time			90		%	28
Crew Loading and Waiting Time Analyses						
Annual Work Days	AWD		240		d/y	
Annual Plant Operating days (1.5 MW)	APOD1.5			293	d/y	
Annual Plant Operating Days (3.0 MW)	APOD3.0			311	d/y	

Exhibit 2.2.1 – Illustrative Generic Parameter Entries (concluded)

2.2.1. Table Headings

The top level generic parameter table headings are described below:

Parameter	Descriptions of a specified parameter
Par. Name	Parameter name used in Excel equations
Constants	Fixed values – only one in present version (hours/year)
User Inputs	User entered values
Results	Parameters computed from others – e.g., number of 1.5 MW turbines
Units	Units of measure used in analysis
Note	Index to notes found under the Notes tab

2.2.2. Parameter Descriptions

Key parameters are described below.

Plant parameters:	
Unit annual operating hours	Productive turbine operating hours
Labor rates:	
Annual work hours	After allowance for holidays, vacation, sick time
OEM markup:	
Material cost markup factor	Turbine manufacturer's markup of factory cost of components supplied as spares
Spare component inventory levels:	
Acceptable availability delay	Waiting time to obtain a spare if not in stock
Spare available percent of time	Likelihood spare will be in stock

Crew loading and waiting time analyses:

Annual work days	After weekends and company holidays
Annual plant operating days (x-MW)	Computed from user entered Annual Operating Hours for each power rating

These parameters were used to compute unscheduled maintenance crew loading (i.e., fraction of time crew is occupied with repair work – which determines waiting time to start a repair and consequent loss of availability).

2.3. Design and Rating Specific Parameters

Parameters which are specific to a turbine design and rating were entered in tables provided on the worksheet for that configuration. Tables were provided for parameters in the following categories:

1. Scheduled labor – crew make up
2. Unscheduled labor – crew make up
3. Support equipment – equipment set
4. Scheduled maintenance materials – lubricants, filters, etc.
5. Unscheduled materials cost – for drive train
6. Unscheduled materials cost – for other turbine systems

An illustrative Scheduled Labor parameter table is depicted in Exhibit 2.3.1.

Scheduled Labor					
			Annual		
Class	**Qty**	**Hourly Rate**	**Direct**		
		$/h	$		
Crane Operator	0	35	0		
Senior Tech	1	25	50,000		
Junior Tech	1	15	30,000		
			80,000		
Overhead		0.5	40,000		
Total Burdened Labor				**120,000**	**$/y**
				0.037	**Cent/kWh**

Exhibit 2.3.1 – Illustrative Scheduled Labor Parameter Entries

The number of crew members by class were entered in the highlighted locations. Note that the labor and overhead rates are the same as the values entered in the generic parameter table. Also note that the total labor cost was factored to a cents/kWh basis so that the impact of choices may be quickly identified.

Staffing levels for the Unscheduled Maintenance crew were entered in a similar table as shown in Exhibit 2.3.2.

Unscheduled Labor					
			Annual		
Class	Qty	Hourly Rate	Direct		
		$/h	$		
Crane Operator	1	35	70,000		
Senior Tech	2	25	100,000		
Junior Tech	1	15	30,000		
			200,000		
Overhead		0.5	100,000		
Total Burdened Labor				300,000	$/y
Total NPV Factored LRC				127,703	$/y
				0.039	Cent/kWh

Exhibit 2.3.2 - Illustrative Unscheduled Labor Parameter Entries

This labor cost was treated as Levelized Replacement Cost (LRC) item and computed on an NPV basis.

Support equipment quantity assumptions for a particular design and rating configuration were entered in a separate table. Illustrative 1.5 MW Baseline selections are depicted in Exhibit 2.3.3.

Equipment – Shared for Scheduled and Unscheduled							
Item	**Fuel Usage Gal/wk**		**Qty**	**Unit Cost $**		**Extended Cost $**	**Equip. Maint. Cost $**
Large Crane	20		1	2,000,000		2,000,000	60,000
Small Crane	15		1	1,000,000		1,000,000	30,000
Tractor	20		1	20,000		20,000	600
Trailer			1	70,000		70,000	2,100
Pickup Truck	10		4	30,000		120,000	3,600
				$/y		**3,210,000**	**96,300**
				Cent/kWh		**0.075**	**0.030**

Exhibit 2.3.3 - Illustrative 1.5 MW Baseline Case Support Equipment Quantity Assumptions

Both the 1.5 MW and 3.0 MW wind turbines sometimes require the use of a large lattice boom type crane when assembling or performing maintenance. In order to determine the cost of this crane, research was done to determine readily available cranes which can meet the operating requirements particular to both the 1.5 MW and 3.0 MW turbine heights. The two factors which drive what size crane is required are operating height and weight of the working load. These parameters were defined by NPS and by NREL as follows:

1.5-MW Turbine:

	NREL	NPS
Height Requirement	330'	308'
Load Range		19-32 Tons
Radius		55'

3.0-MW Turbine:

	NREL	NPS
Height Requirement	460'	357'
Load Range		40-80 Tons
Radius		63'

Using these requirements as a guide, crane distributors were contacted representing three different crane manufacturers to solicit information on available products. These manufactures included the Liebherr Nenzing Crane Co., Grove Cranes, and Manitowoc Cranes. The best matches were proposed for each turbine scenario, and the dollar values used to estimate the large crane cost in the model determined. The results of the search showed that the Liebherr Nenzing Crane Co. provided the best options, as follows:

1.5 MW: Liebherr LR 1350/1 with "S" Boom. ~$1.9 Million. Erect or disassemble in 1 day.

3.0 MW (NPS Height): Liebherr LR 1350/1 with "SLDB" Boom and Derrick. ~$2.1 Million. Erect or disassemble in 1 day.

3.0 MW (NREL Height): Liebherr LR 1600/1 with "SD" Boom and Derrick. ~$5.0 Million. Erect or disassemble in 2 days.

For the purpose of determining a cost for use in the model, the NPS height was used for the 3.0 MW scenarios and this resulted in the same crane costs for the 1.5 MW and 3.0 MW models.

The cost of scheduled maintenance materials was determined by various parameters. Exhibit 2.3.4 shows an illustrative set of 1.5 MW Baseline case values entered into the highlighted areas. Note that the unit cost of these consumables – e.g., hydraulic fluid cost – was previously specified in the generic parameter table. The brake pad unit cost was design and rating specific and hence provision was made for user entry of this assumption.

Scheduled Maintenance Materials (drive train + other)						
Item	**Qty**	**Annual Freq. Per/y**	**Unit**	**Unit Cost $/Unit**	**Plant Extended Cost $**	**Note**
Gearbox Oil	85	0.5	Gallon	20.00	56,950	
Bearing Grease	40	1	Oz	0.05	134	
Hyd Fluid	1	1	Quart	5.00	335	
Oil Filter	1	1		160.00	10,720	
Air Filter	1	1		50.00	3,350	
Gen Brushes	1	1		500.00	33,500	
Hub Brushes	1	0.2		100.00	1,340	
Brake Pads	1	2		55.00	7,370	26
Equip Fuel	95	52	Gallon	1.40	6,916	
Waste Disposal	86	0.5	Gallon	2.00	11,457	
Total Cost					**132,072**	**$/y**
					0.041	**C/kW h**

Exhibit 2.3.4 - Illustrative 1.5 MW Baseline Scheduled Maintenance Materials Utilization Assumptions

The cost of unscheduled maintenance materials was determined by a variety of parameters and calculations. One entry table was provided for major component groups of the drive train and a second for “other” turbine component groups. Illustrative assumption entries for a 1.5 MW Baseline drive train configuration are shown in Exhibit 2.3.5.

Unscheduled *drive train* maintenance materials cost																				
										Crew loading		Annual component replace or overhaul							Spare inventory	
Component (1)	Qty	Original	Δ	Spare	Failures	Δ	Fail rate	Plant	Rnd	MTTR	Crew	Action	Spare Repl. Time(days)			Spare cost		Annual	Spares	Cost
		Cost $ (1)		Cost $	per 10^6 h		Source	fail/y	fail/y	days	days	(6)	Calc.	Δ	Orig.	Notes	Factor	Cost $	Req	$
Main shaft	1	22,900	1.00	34,350	1.2	1.00	NPRD-184	0.6	1	5	5	Replace/OH	84	1.00	84	2	0.55	18,893	2	68,700
Main bearing	1	15,182	1.00	22,773	1.4	1.00	NPRD-13	0.7	1	5	5	Replace	56	1.00	56		1.00	22,773	2	45,546
Gearbox	1	122,784	1.00	184,176	10.7	1.00	NPRD-104	5.0	6	5	30	Replace/OH	90	1.00	90	3	0.50	552,528	4	736,704
Gearbox mount	1	4,000	1.00	6,000	4	1.00	NPRD-144	1.9	2	1	2	Replace	70	1.00	70		1.00	12,000	2	12,000
Brake system	1	10,051	1.00	15,077	4.3	1.00	NPRD-24	2.0	3	1	3	Replace/OH	56	1.00	56	3	0.25	11,307	2	30,153
HS coupling	1	4,195	1.00	6,293	0.4	1.00	NPRD-71	0.2	1	1	1	Replace	56	1.00	56		1.00	6,293	2	12,585
Rotor slipring	1	1,397	1.00	2,096	17.9	1.00	NPRD-84	8.4	9	1	9	Replace	56	1.00	56		1.00	18,860	4	8,382
Generator	1	65,000	1.00	97,500	9.3	1.00	NPRD-106	4.4	5	5	25	Replace/OH	90	1.00	90	3	0.50	243,750	4	390,000
Bedplate	1	41,976	1.00	62,964	1	1.00	NPRD-194	0.5	1	5	5	Replace	90	1.00	56		1.00	62,964	2	125,928
Nacelle encl.	1	20,637	1.00	30,956	2.3	1.00	NPRD-71	1.1	2	1	2	Replace/OH	90	1.00	90	2	0.55	34,051	2	61,911
Converter	1	62,500	1.00	93,750	14	1.00	NPRD-68	6.6	7	1	7	Replace/OH	56	1.00	56	5	0.05	32,813	4	375,000
Power cabling	1	17,220	1.00	25,830	1	1.00	NPRD-231	0.5	1	1	1	Replace/OH	30	1.00	30	2	0.55	14,207	1	25,830
																		1,016,230		1,866,909
													NPV factored LRC					432,587		
									39		94		cents/kWh					0.13		0.06

Exhibit 2.3.5 – Illustrative Unscheduled Materials Cost Entries for a 1.5-MW Baseline Drive Train

The table column headings are explained by the following notes on each – user entries are highlighted:

1.	Qty	Quantity per turbine
2.	Original Cost	Estimated factory cost (materials + labor +burden)
3.	Δ	Cost scaling factor for sensitivity studies
4.	Spare Cost	Original Cost x Δ x generic EM markup factor
5.	Failures/10^6 h	Failure rate (failures per 10^6 hours of running time)
6.	Δ	Failure rate scaling factor for sensitivity studies
7.	Failure rate source	NPRD = Non-Electronic Parts Reliability Data Handbook
8.	Plant fail/y	Annual plant failures based on operating hours and failure rate
9.	Rnd fail/y	Rounded up annual failures
10.	MTTR	Mean time to repair
11.	Crew days	Product of annual failures and MTTR
12.	Action	Replace & overhaul (e.g., gearbox) or replace (e.g., bearing)
13.	Spare replenish time	Lead time to procure
14.	Spare cost notes	Explanation of assumed spares cost factor
15.	Spare cost factor	Fraction of new spare cost typically incurred
16.	Annual spare cost	New spare cost x rounded failures x cost factor
17.	Spares inventory req	Inventory for timely availability estimated by Erlang C model
18.	Spares inventory cost	New spare cost x inventory required

It is important to note that replaced or overhauled components were treated as Levelized Replacement Cost (LRC) items and hence their total annual cost was computed on a NPV basis and then reduced to a cents/kWh value by normalizing the result by the annual plant productivity (kWh). However, the initial spares inventory was assumed to be purchased with the turbines and hence the annualized cost for these components was determined on the same fixed charge rate (FCR) basis as that used for the turbine itself. A similar table, not shown, was provided to capture user assumption for "other" turbine components.

2.3.1. Failure Rate Factoring

Failure rates were estimated for Baseline main bearings, gearbox and generator using the 1999 edition of the *Nonelectronic Parts Reliability Data Handbook* (NPRD) published by IIT Research Institute Reliability Center, Rome NY. The failure rate comparison between the NPRD approach and the Betreiber-Datenbasis, 1999-2000 (the data source reported in Wind Stats) is presented in Exhibit 2.3.6. It was judged that these handbook estimates were representative for these mature designs.

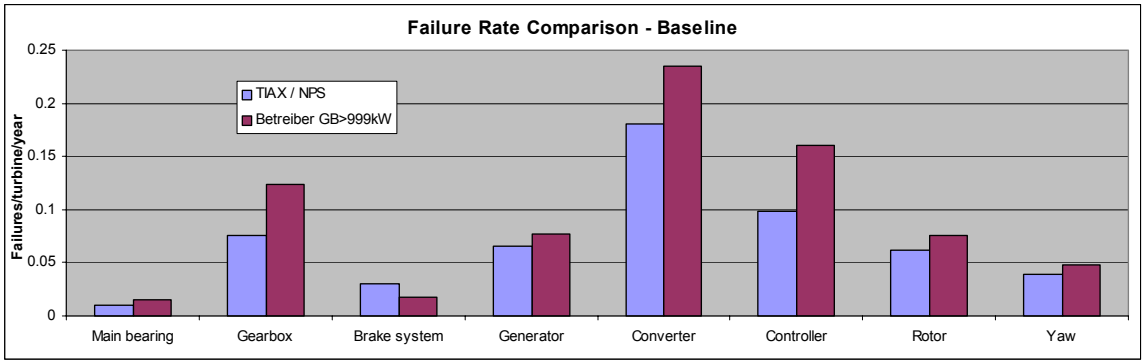

Exhibit 2.3.6 – Failure Rate Comparison - Baseline

However, like functions in other drive train designs require new unconventional component designs for which NPRD failure rates were not representative as is. Therefore, baseline failure rates were modified by various weighting factors to derive estimates deemed suitable for these analyses. For example Exhibit 2.3.7 illustrates how baseline generator failure rate was factored to develop estimates for other designs.

Relative Generator Failure Rate – Rev C				
Components	Baseline	DD	Single Stage	Multi-Output
Stator Windings	6	9	7.5	6
Rotor Windings	6	0	0	0
Generator Bearings	8	0	8	0
Excitation Sliprings	1	0	0	0
Generator Shaft	1	0	1	1
External	1	1	1	1
Not Specified	1	1	1	1
Total	24	11	18.5	9
Relative Failure Rate	2.00	0.92	1.54	.75
Normalized to Base	1.00	0.46	0.77	0.375

Exhibit 2.3.7 - Factoring of Baseline Generator Failure Rate to Estimate Rates for Other Designs

Similar procedures were followed for the gearbox and main bearings. Results for these and the generator are summarized in Exhibit 2.3.8.

	Baseline	Direct Drive	MS-1	MS-6
Main Bearing	1.0	2.0	2.0	2.0
Gearbox	1.0	0.0	0.8	0.9
Generator	1.0	0.46	0.77	0.375

Exhibit 2.3.8 - Factoring of Baseline Main Bearing, Gearbox and Generator Failure Rates

3. Results

3.1. O&M Cost

The summary of O&M cost results for seven design-rating cases is depicted Exhibit 3.1.1

Summary of O&M Costs (cents/kWh) for Seven Drive Train Designs								
Rating	1.5 MW	1.5MW	1.5 MW	1.5 MW	3.0 MW	3.0 MW	3.0 MW	Note
Design	Baseline	Direct Drive	MS-1	MS-6	Baseline	Direct Drive	MS-1 Stage	
Cost Center	C/kWh							
Scheduled Burdened Labor	0.037	0.037	0.037	0.037	0.034	0.034	0.034	
Unscheduled Burdened Labor	0.039	0.039	0.039	0.039	0.036	0.036	0.036	7
Scheduled Materials	0.041	0.011	0.041	0.041	0.022	0.006	0.022	
Unscheduled Materials – Drive Train	0.133	0.050	0.098	0.193	0.109	0.058	0.091	7
Unscheduled Materials – Other	0.029	0.029	0.029	0.029	0.026	0.026	0.026	7
Unscheduled Spares – Drive Train	0.061	0.058	0.058	0.088	0.056	0.051	0.054	8
Unscheduled Spares – Other	0.080	0.080	0.080	0.069	0.072	0.072	0.072	8
Equipment	0.105	0.015	0.015	0.105	0.070	0.070	0.070	
Equipment Maintenance	0.030	0.030	0.030	0.030	0.027	0.027	0.027	
G&A	0.057	0.057	0.057	0.057	0.053	0.053	0.053	
Totals	0.61	0.50	0.57	0.69	0.50	0.43	0.49	

Notes:
(7) Levelized cost of replacement (LRC) item based on NPV or uniform annual outlay for materials and labor
(8) Levelized cost of replacement (LRC) item based on initial cost uniformly distributed over plant life

Exhibit 3.1.1 – Illustrative Results for Seven Design Rating Cases

Note that due to adjustments of analysis assumptions made subsequent to the preparation of this report, small differences may exist between summary results reported in Exhibit 3.1.1 and a similar tabulation presented in the NPS Phase 1 Final Study Design Review at NREL on January 22, 2003.

These final results demonstrate an O&M cost advantage for the Direct Drive solution at either 1.5 or 3.0 MW scale. The results also predict the O&M cost disadvantage of the MS-6 approach. Finally, increasing the turbine size to 3.0 MW reduces the O&M Cost. A breakdown of the O&M cost by category for the baseline configuration is show in Exhibit 3.1.2.

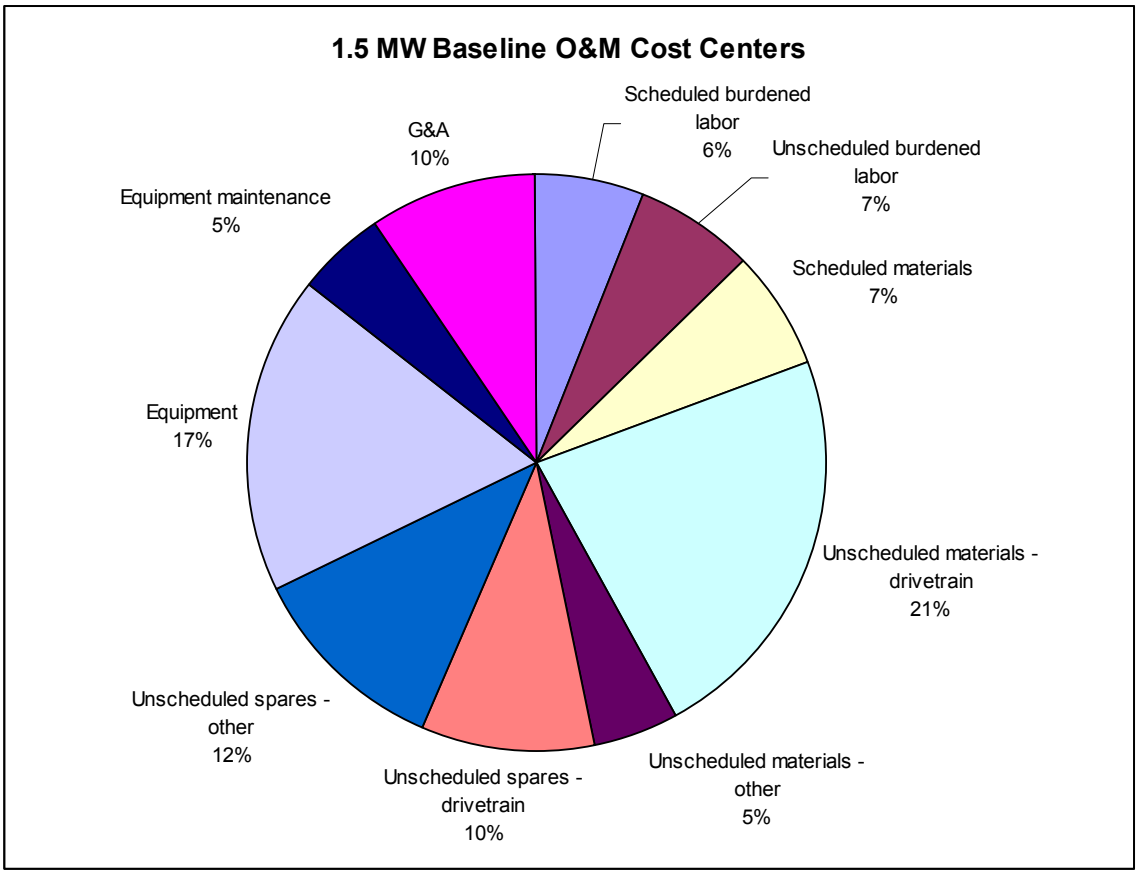

Exhibit 3.1.2 - 1.5-MW Baseline O&M Cost Centers

While the analysis method does not automatically enforce solutions that conform to a desired availability target, provision is made to check the resulting availability. Exhibit 3.2.1 illustrates a separate analysis of availability loss and in particular consideration of turbine down time due to crew and equipment queuing delay in responding to unscheduled maintenance actions. The analysis methodology is explained in Appendix 5.

Unscheduled Crew Wait Time Estimate								
Rating	**1.5 MW**	**1.5MW**	**1.5 MW**	**1.5 MW**	**3.0 MW**	**3.0 MW**	**3.0 MW**	**Note**
Design	**Baseline**	**Direct Drive**	**MS-1**	**MS-6**	**Baseline**	**Direct Drive**	**MS-1 Stage**	
Unscheduled Crew Loading (d/y)								
Drive Train	94	41	81	101	60	27	47	
Other	54	54	54	54	35	35	35	
Total	**148**	**95**	**135**	**155**	**95**	**62**	**82**	
Unscheduled Repairs (jobs/y)								
Drive Train	39	26	34	38	25	16	20	
Other	18	18	18	18	11	11	11	
Total	**57**	**44**	**52**	**56**	**36**	**27**	**31**	
Avg. MTTR – All Jobs (Crew Days)	**2.6**	**2.2**	**2.6**	**2.8**	**2.6**	**2.3**	**2.6**	
Crew Capacity (jobs/y)	92	111	92	87	91	105	91	12
Avg. Repair Request Rate (jobs/day)	0.19	0.15	0.18	0.19	0.12	0.09	0.10	13
Avg. Repair Rate (Crews Cap./Work days/y)	0.39	0.46	0.39	0.36	0.38	0.44	0.38	14
Avg. Crew and Equip. Wait (days)	**2.65**	**1.04**	**2.22**	**3.11**	**1.16**	**0.57**	**0.95**	**15**
Avg. Down Time Per event (days)	5.2	3.2	4.8	5.9	3.8	2.9	3.6	
Total Annual Turbine Down Time (days)	299	141	250	329	137	77	111	
Plant Turbine Operating Time (d/y)	19,640	19,640	19,640	19,640	10,581	10,581	10,581	
Availability Loss (percent)	1.52	0.72	1.27	1.67	1.29	0.73	1.05	

Notes:

(12) Crew Capacity = Work Days/y / MTTR

(13) lambda = Average Rate of Requests for Service = Jobs/ Operating Days/y

(14) mu = Average Repair Rate = Crew Capacity (jobs/y) / Annual Work Days/y

(15) W = Average Wait (Single Server Queuing Model) = lambda / mu x (mu-lambda)

3.2.1 - Impact of Unscheduled Maintenance Crew Loading on Availability Loss

These results indicate that the target plant availability of 98.5% was attained in all cases except for the MS-6 design. The relatively high failure rate and MTTR of the MS-6 design combine to over load the crew resulting in an average response time of 3.11 days and an availability loss of 1.67%. The Direct Drive designs achieve a projected availability of approximately 99.3%.

4. Sensitivity Analyses

Five built-in macros automate performance of sensitivity analyses. The sensitivity analysis was invoked to compute and graph the impact of a selected percent deviation of the following variables:

1. Gearbox Component Cost
2. Generator Component Cost
3. Power Electronics Component Cost
4. Gearbox Lead Time
5. Generator Lead Time
6. Power Electronics Lead Time
7. Gearbox Failure Rate
8. Generator Failure Rate
9. Power Electronics Failure Rate

Exhibit 4.0.1 presents "tornado" style graphs of illustrative sensitivity analysis results for the 1.5 MW Baseline and Direct Drive configurations. In these cases, the assumptions for each graphed factor were decreased and increased by 25%.

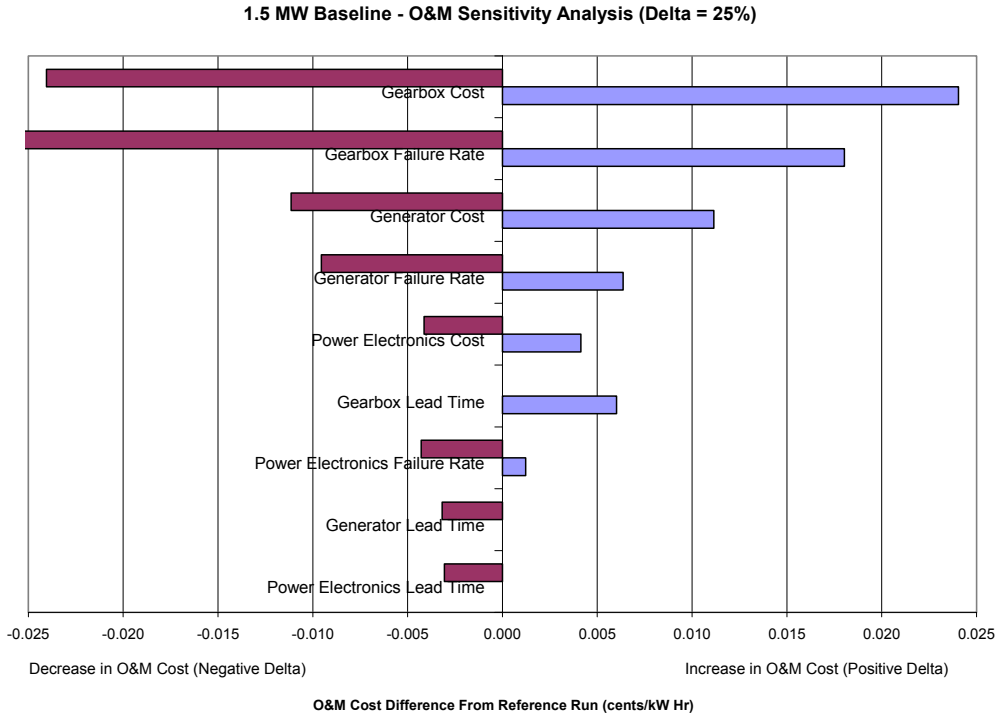

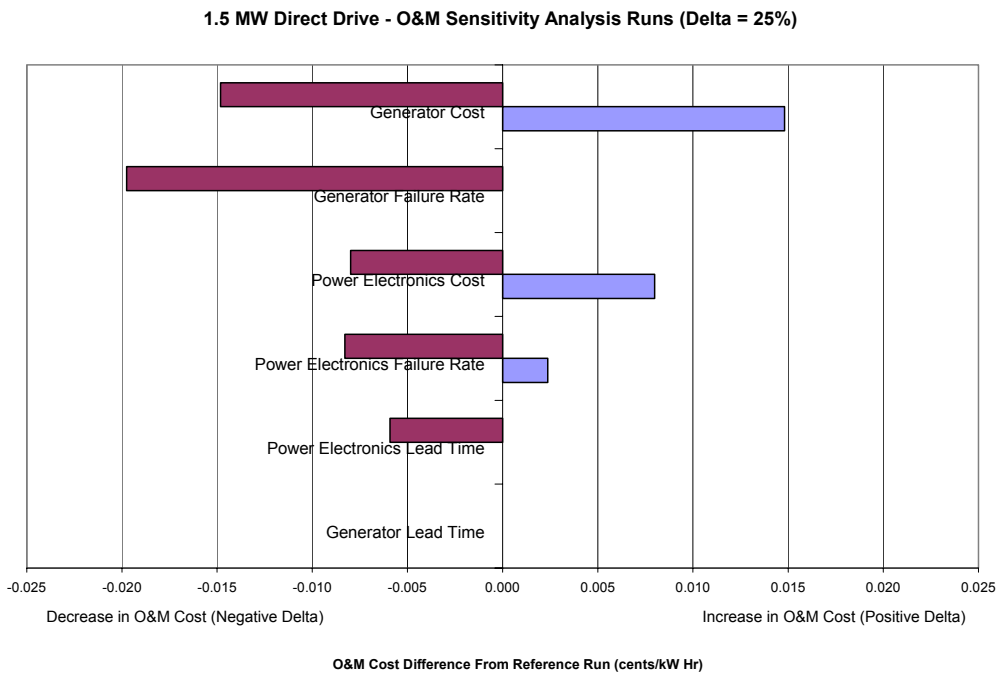

Exhibit 4.0.1 – Sensitivity Analysis Results

Selected findings noted below demonstrate the utility of the sensitivity analysis procedure:

- Gearbox cost and failure rate are the most significant factors for the Baseline configuration
- A 25% increase of Baseline gearbox cost increases O&M cost 0.024 cents/kWh – 4% of the reference case O&M cost
- A 25% increase of Baseline gearbox failure rate increases O&M cost 0.018 cents/kWh – 3% of the reference case O&M cost
- Generator cost and failure rate are the most significant factors for the Direct Drive design
- A 25% increase of Direct Drive generator cost increases O&M cost 0.015 cents/kWh – 3% of the reference case O&M cost
- A 25% increase of Direct Drive generator failure rate curiously had no impact on estimated O&M cost because the analysis procedure rounds up annual failures to the nearest integer value so as to provide a suitable input to the Erlang C queuing model for estimation of spares inventory depth, as well as to determine a worst-case assessment of maintenance cost. For this case the 25% failure rate increase is not sufficient to increment the rounded annual failures.

A 25% increase or decrease of Direct Drive generator lead time also had no impact on estimated O&M cost because the Erlang C queuing model employed to estimate spares inventory depth to

satisfy objectives for timely delivery must report an integer number result. In this case the lead time change was insufficient to impact the number of spares. A similar situation prevails for a 25% increase in Power Electronics (component) lead time.

A final suite of assumptions found O&M cost increases (cents/kWh) due to 25% increases of factors as reported by Exhibit 4.0.2.

	1.5 MW Baseline	1.5 MW Direct Drive	1.5 MW MS-1	1.5 MW MS-6	3.0 MW Baseline	3.0 MW Direct Drive	3.0 MW MS-1
Gearbox Cost	0.024		0.014	0.008	0.019		0.016
Generator Cost	0.011	0.015	0.009	0.043	0.006	0.017	0.006
Pwr Electronics Cost	0.004	0.008	0.008	0.010	0.004	0.006	0.006
Gearbox Lead Time	0.006		0	0	0		0
Generator Lead Time	0	0	0.003	0.008	0	0.014	0.005
Pwr Elect Lead Time	0	0	0	0	0	0	0
Gearbox Failure Rate	0.018		0.008	0.005	0.019		0
Generator Failure Rate	0.006	0	0.010	0.041	0	0	0.012
Pwr Elect Failure Rate	0.001	0.002	0.002	0.003	0.001	0.002	0.002

Exhibit 4.0.2 – Sensitivity Results – O&M cost Increases (Cents/kWh) Due to 25% Higher Factors

The same final suite of assumptions found O&M cost decreases (cents/kWh) due to 25% decreases of factors reported by Exhibit 4.0.3.

	1.5 MW Baseline	1.5 MW Direct Drive	1.5 MW MS-1	1.5 MW MS-6	3.0 MW Baseline	3.0 MW Direct Drive	3.0 MW MS-1
Gearbox Cost	0.024		0.014	0.008	0.02		0.016
Generator Cost	0.011	0.015	0.009	0.043	0.006	0.017	0.006
Pwr Electronics Cost	0.004	0.008	0.008	0.01	0.004	0.006	0.006
Gearbox Lead Time	0		0.004	0.002	0		0
Generator Lead Time	0.003	0	0	0.008	0	0	0
Pwr Elect Lead Time	0.003	0.006	0.006	0.007	0.004	0.006	0.006
Gearbox Failure Rate	0.025		0.012	0.007	0		0.022
Generator Failure Rate	0.009	0.020	0.007	0.041	0.008	0.02	0
Pwr Elect Failure Rate	0.004	0.008	0.008	0.010	0.005	0.008	0.008

Exhibit 4.0.3 – Sensitivity Results – O&M Cost Decreases (cents/kWh) due to 25% Lower Factors

5. Conclusions

This detailed O&M analysis procedure has many beneficial features:

- The scope of O&M cost elements considered is extensive
- Realistic cost models are employed
  - Full-time scheduled and unscheduled maintenance crews
  - On-site support equipment
  - Maintenance of a spares inventory
  - NPV based costing of unscheduled repair materials and labor
- Objective queuing analysis means are used to estimate inventory depth for timely availability
- Availability impact is checked by a separate calculation
- The procedure is "open" facilitating review, criticism and changes to improve it

O&M cost estimates found for the baseline designs are in reasonable agreement with costs for mature commercial designs of this class which have been cited in the recent trade literature or obtained through telephone interviews with plant operators.

The results also support key expectations:

- O&M cost advantage of the Direct Drive configuration
- O&M cost disadvantage of the multi-generator, medium speed designs
- O&M cost advantage of 3.0 MW cases

It should be noted that the total of O&M costs and COE results for each design includes significant "other" components – controller, rotor, yaw and tower systems -- which effectively desensitizes the bottom line results to the impact of drive train subsystem changes. The experienced designee seeking near-optimal subsystem solutions should pay close attention to the intermediate results which address only costs associated with the subsystem of interest. While the development of this O&M cost model was motivated by the needs of the present drive train technology assessment, it is clear that it can be adapted to the economic optimization of any wind turbine subsystem.

6. Appendix 1: O&M Cost Analysis Workbook User Guide

The "O&M Cost Analysis Workbook" is a convenient tool used to analyze the effects of varying different design, operation, and maintenance parameters of 1.5 MW and 3.0 MW wind turbine generators on their respective operations and maintenance (O&M) costs. By being able to easily vary these parameters and immediately see the resulting O&M costs, the workbook also serves as a valuable tool capable of completing a sensitivity analysis comparing the effects from changing different individual turbine parameters on O&M costs. These analyses can be run for seven different pre-determined cases:

- 1.5 MW Baseline
- 1.5 MW Direct Drive
- 1.5 MW MS-1
- 1.5 MW MS-6
- 3.0 MW Baseline
- 3.0 MW Direct Drive
- 3.0 MW MS-1

This appendix provides instructions on how to use the workbook, which includes the use of some built in macros to automate the sensitivity analysis. There are a few things the user must keep in mind when using this workbook and running the macros:

- Each case (listed above) has its own worksheet where the user can modify the particular turbine parameters.
- The worksheet names cannot be renamed or the macros will not function properly.
- The users will need to purchase the Erlang C calculator from Westbay Engineers in order for some of the calculations to work. http://www.erlang.com/traffic.html .

Opening the Workbook.

1. Open the "O&M Cost Analysis Workbook."
2. The computer will ask if you would like to enable macros. Choose "yes" to enable the macros.
3. Select "No" when the computer asks if you would like to update the workbook with changes made to other workbooks.
4. Go to the "Summary" worksheet (click on the "summary" worksheet tab/button on the bottom, you might have to scroll left or right using the arrows on the bottom left to see the tab/button) and confirm that all the calculations are working correctly. If everything looks normal (no "#NAME?" where there should be real numbers) then continue on. If "#NAME?" appears in any of the cells, this needs to be fixed. The most likely cause of a "#NAME?" is from not being able to properly reference the ERLANG C calculator/add-in which the workbook utilizes. Check cells T49-T60 in all the case worksheets to determine if the ERLANG C calculator/add-in is referenced correctly. If you have not purchased the ERLANG C add-in, then this is another reason why the cells are showing "#NAME?" . You must purchase the ERLANG C calculator plug-in from: http://www.erlang.com/traffic.html .

Data Input

Every time new data is inputted into a specific case, the results on the "Summary" worksheet are automatically updated. There is no limit to how many changes can be made or when you are allowed to input the data. (Keep in mind that the sensitivity analysis results will not be updated until the built in macros are run.)

1. Input the new values for each of the cases into their respective worksheets. Cells highlighted in orange represent variables and where the inputs should be entered. Appendix 2 shows the inputs used for both the "Unscheduled" 1.5 MW and 3.0 MW scenarios. Generally, the "scheduled" and "equipment" costs for all the cases will not change, as most of the variation will come in the "unscheduled" costs. (Special attention should be made when entering the "Spare Replenish Time in Days" data to make sure the data is entered into column 'P,' not 'N,' in rows 49-60.)
2. Once you have entered the new values, check to make sure that all the "Δ" (delta) values read "1.00." This value will be varied (by the macros) during the sensitivity analysis based on the scaling factor that is selected.
3. Check that all the values found on the "Generic" worksheet are correct. These values will be applied for all the cases.
4. In the "Master Data" worksheet, modify the scaling factors to the values at which you want the sensitivity analysis to analyze the data by (note the "scaling direction" of either positive or negative in column "N"). For example, a scaling factor of 0.25 in cell "O8" will record the resulting O&M cost due to a 25% increase of the "Power Electronics Component Cost" of $62,500.

Sensitivity Analysis

Once the inputs are all entered correctly, the sensitivity analysis can be done to measure and graph the effects from scaling (per the user inputs) the following nine variables:

- Gearbox Component Cost
- Generator Component Cost
- Power Electronics Component Cost
- Gearbox Lead Time
- Generator Lead Time
- Power Electronics Lead Time
- Gearbox Failure Rate
- Generator Failure Rate
- Power Electronics Failure Rate

Five built-in macros automate the sensitivity analysis and allow the user to make as many changes as necessary and still be able to efficiently conduct the analysis. If macros were not enabled when opening the file, these macros will not be accessible. (To access them, save, close and re-open the file and click "yes" or "enable macros" when prompted.)

1. From the control bar in Excel, go to Tools/Macro/Macros, or just select “Alt + F8.”
2. Highlight the “GridUpdate” macro and select “Run.” This macro updates the “MasterData” worksheet with the new inputs.
3. Go to Tools/Macro/Macros, or just select “Alt + F8.” Highlight the “Run1500” macro and select “Run.” This macro completes the sensitivity analysis for all the 1.5 MW cases.
4. Go to Tools/Macro/Macros, or just select “Alt + F8.” Highlight the “Run3000” macro and select “Run.” This macro completes the sensitivity analysis for all the 3.0 MW cases.
5. Go to Tools/Macro/Macros, or just select “Alt + F8.” Highlight the “GraphFormatTornado” macro and select “Run.” This macro formats the graphs as “tornado plots” with the biggest variance (highest sensitivity) shown at the top of the graph, and the lowest variance shown at the bottom.

The sensitivity analysis is now complete and the graphs are formatted as “tornado plots.” If you would like to format all the graphs in a consistent manner, run the “GraphFormatStd” macro.

7. Appendix 2: Unscheduled 1.5 MW and 3.0 MW Case Inputs

Table 1: Unscheduled 1.5 MW Baseline Inputs
Table 2: Unscheduled 1.5 MW Direct Drive Inputs
Table 3: Unscheduled 1.5 MW MS-1 Inputs
Table 4: Unscheduled 1.5 MW MS-6 Inputs
Table 5: Unscheduled 3.0 MW Baseline Inputs
Table 6: Unscheduled 3.0 MW Direct Drive Inputs
Table 7: Unscheduled 3.0 MW MS-1 Inputs

Unscheduled *drive train* maintenance materials cost																				
										Crew loading		Annual component replace or overhaul							Spare inventory	
Component (1)	Qty	Original	Δ	Spare	Failures	Δ	Fail rate	Plant	Rnd	MTTR	Crew	Action	Spare Repl. Time(days)			Spare cost		Annual	Spares	Cost
		Cost $ (1)		Cost $	per 10^6 h		Source	fail/y	fail/y	days	days	(6)	Calc.	Δ	Orig.	Notes	Factor	Cost $	Req	$
Main shaft	1	22,900	1.00	34,350	1.2	1.00	NPRD-184	0.6	1	5	5	Replace/OH	84	1.00	84	2	0.55	18,893	2	68,700
Main bearing	1	15,182	1.00	22,773	1.4	1.00	NPRD-13	0.7	1	5	5	Replace	56	1.00	56		1.00	22,773	2	45,546
Gearbox	1	122,784	1.00	184,176	10.7	1.00	NPRD-104	5.0	6	5	30	Replace/OH	90	1.00	90	3	0.50	552,528	4	736,704
Gearbox mount	1	4,000	1.00	6,000	4	1.00	NPRD-144	1.9	2	1	2	Replace	70	1.00	70		1.00	12,000	2	12,000
Brake system	1	10,051	1.00	15,077	4.3	1.00	NPRD-24	2.0	3	1	3	Replace/OH	56	1.00	56	3	0.25	11,307	2	30,153
HS coupling	1	4,195	1.00	6,293	0.4	1.00	NPRD-71	0.2	1	1	1	Replace	56	1.00	56		1.00	6,293	2	12,585
Rotor slipring	1	1,397	1.00	2,096	17.9	1.00	NPRD-84	8.4	9	1	9	Replace	56	1.00	56		1.00	18,860	4	8,382
Generator	1	65,000	1.00	97,500	9.3	1.00	NPRD-106	4.4	5	5	25	Replace/OH	90	1.00	90	3	0.50	243,750	4	390,000
Bedplate	1	41,976	1.00	62,964	1	1.00	NPRD-194	0.5	1	5	5	Replace	90	1.00	56		1.00	62,964	2	125,928
Nacelle encl.	1	20,637	1.00	30,956	2.3	1.00	NPRD-71	1.1	2	1	2	Replace/OH	90	1.00	90	2	0.55	34,051	2	61,911
Converter	1	62,500	1.00	93,750	14	1.00	NPRD-68	6.6	7	1	7	Replace/OH	56	1.00	56	5	0.05	32,813	4	375,000
Power cabling	1	17,220	1.00	25,830	1	1.00	NPRD-231	0.5	1	1	1	Replace/OH	30	1.00	30	2	0.55	14,207	1	25,830
																		1,016,230		1,866,909
													NPV factored LRC					432,587		
									39		94		cents/kWh					0.13		0.06

Unscheduled *"other"* maintenance materials cost																		
										Crew loading		Annual component replace or overhaul					Spare inventory	
Component (1)	Qty	Original	Δ	Spare	Failures	Δ	Fail rate	Plant	Rnded	MTTR	Crew	Action	Spare	Spare cost		Annual	Spares	Cost
		Cost $ (1)		Cost $	per 10^6 h		Source	fail/y	fail/y	days	days	(6)	replenish	Notes	Factor	Cost $	Req	$
													time (days)					
Controller	1	42,925	1.00	64,388	18.3	1.00	B-D	8.6	9	1	9	Replace/OH	90	2	0.15	86,923	5	321,938
Rotor	1	295,174	1.00	442,761	8.7	1.00	B-D	4.1	5	5	25	Replace	60		0.05	110,690	3	1,328,283
Yaw	1	27,000	1.00	40,500	5.6	1.00	B-D	2.6	3	5	15	Replace/OH	84	3	0.05	6,075	3	121,500
Tower	1	230,000	1.00	345,000	0.6	1.00	GEC	0.3	1	5	5	Replace	56		0.05	17,250	2	690,000
																220,938		2,461,721
													NPV factored LRC			94,049		
									18		54		cents/kWh			0.03		0.08

Table 1: Unscheduled 1.5-MW Baseline Inputs

Unscheduled *drive train* maintenance materials cost																				
										Crew loading		Annual component replace or overhaul							Spare inventory	
Component (1)	Qty	Original	Δ	Spare	Failures	Δ	Fail rate	Plant	Rnd	MTTR	Crew	Action	Spare Repl. Time(days)			Spare cost		Annual	Spares	Cost
		Cost $ (1)		Cost $	per 10^6 h		Source	fail/y	fail/y	days	days	(6)	Calc.	Δ	Orig.	Notes	Factor	Cost $	Req	$
													time (days)							
Main shaft	0	0	1.00	0	0.0	1.00	NPRD-184	0.0	0	0	0	Replace/OH	0	1.00	0	2	0.00	0	0	0
Main bearing	0	36,000	1.00	54,000	2.8	1.00	NPRD-13	0.0	0	5	0	Replace	56	1.00	56		1.00	0	0	0
Gearbox	0	0	1.00	0	0	1.00	NPRD-104	0.0	0	0	0	Replace/OH	0	1.00	0	3	0.00	0	0	0
Gearbox mount	0	0	1.00	0	0	1.00	NPRD-144	0.0	0	0	0	Replace	0	1.00	0		0.00	0	0	0
Brake system	1	8,723	1.00	13,085	4.3	1.00	NPRD-24	2.0	3	1	3	Replace/OH	56	1.00	56	3	0.25	9,813	2	26,169
HS coupling	0	0	1.00	0	0	1.00	NPRD-71	0.0	0	0	0	Replace	0	1.00	0		0.00	0	0	0
Rotor slipring	1	1,397	1.00	2,096	17.9	1.00	NPRD-84	8.4	9	1	9	Replace	56	1.00	56		1.00	18,860	4	8,382
Generator	1	201,618	1.00	302,427	4.3	1.00	NPRD-106	2.0	3	5	15	Replace/OH	90	1.00	90	3	0.25	226,820	3	907,281
Bedplate	1	23,215	1.00	34,823	1	1.00	NPRD-194	0.5	1	5	5	Replace	90	1.00	90		1.00	34,823	2	69,645
Nacelle encl.	1	17,359	1.00	26,039	2.3	1.00	NPRD-71	1.1	2	1	2	Replace/OH	90	1.00	90	2	0.55	28,642	2	52,077
Converter	1	120,835	1.00	181,253	14	1.00	NPRD-68	6.6	7	1	7	Replace/OH	56	1.00	56	5	0.05	63,438	4	725,010
Power cabling	1	17,220	1.00	25,830	1	1.00	NPRD-231	0.5	1	1	1	Replace/OH	30	1.00	30	2	0.55	14,207	1	25,830
																		382,396		1,788,564
													NPV factored LRC					162,778		
									26		41		cents/kWh					0.05		0.06

Unscheduled *"other"* maintenance materials cost																		
										Crew loading		Annual component replace or overhaul					Spare inventory	
Component (1)	Qty	Original	Δ	Spare	Failures	Δ	Fail rate	Plant	Rnded	MTTR	Crew	Action	Spare	Spare cost		Annual	Spares	Cost
		Cost $ (1)		Cost $	per 10^6 h		Source	fail/y	fail/y	days	days	(6)	replensih	Notes	Factor	Cost $	Req	$
													time (days)					
Controller	1	42,925	1.00	64,388	18.3	1.00	B-D	8.6	9	1	9	Replace/OH	90	2	0.15	86,923	5	321,938
Rotor	1	295,174	1.00	442,761	8.7	1.00	B-D	4.1	5	5	25	Replace	60		0.05	110,690	3	1,328,283
Yaw	1	27,000	1.00	40,500	5.6	1.00	B-D	2.6	3	5	15	Replace/OH	84	3	0.05	6,075	3	121,500
Tower	1	230,000	1.00	345,000	0.6	1.00	GEC	0.3	1	5	5	Replace	56		0.05	17,250	2	690,000
																220,938		2,461,721
													NPV factored LRC			94,049		
									18		54		cents/kWh			0.03		0.08

Table 2: Unscheduled 1.5-MW Direct-Drive Inputs

Unscheduled *drive train* maintenance materials cost																				
										Crew loading		Annual component replace or overhaul							Spare inventory	
Component (1)	Qty	Original	Δ	Spare	Failures	Δ	Fail rate	Plant	Rnd	MTTR	Crew	Action	Spare Repl. Time(days)			Spare cost		Annual	Spares	Cost
		Cost $ (1)		Cost $	per 10^6 h		Source	fail/y	fail/y	days	days	(6)	Calc.	Δ	Orig.	Notes	Factor	Cost $	Req	$
													time (days)							
Main shaft	1	0	1.00	0	0.0	1.00	NPRD-184	0.0	0	0	0	Replace/OH	0	1.00	0	2	0.00	0	0	0
Main bearing	1	27,000	1.00	40,500	2.8	1.00	NPRD-13	1.3	2	5	10	Replace	56	1.00	56		1.00	81,000	2	81,000
Gearbox	1	80,700	1.00	121,050	8.6	1.00	NPRD-104	4.1	5	5	25	Replace/OH	90	1.00	90	3	0.50	302,625	4	484,200
Gearbox mount	1	0	1.00	0	0	1.00	NPRD-144	0.0	0	0	0	Replace	0	1.00	0		0.00	0	0	0
Brake system	1	17,862	1.00	26,793	4.3	1.00	NPRD-24	2.0	3	1	3	Replace/OH	56	1.00	56	3	0.25	20,095	2	53,586
HS coupling	1	0	1.00	0	0	1.00	NPRD-71	0.0	0	0	0	Replace	0	1.00	0		0.00	0	0	0
Rotor slipring	1	1,397	1.00	2,096	17.9	1.00	NPRD-84	8.4	9	1	9	Replace	56	1.00	56		1.00	18,860	4	8,382
Generator	1	67,073	1.00	100,610	7.161	1.00	NPRD-106	3.4	4	5	20	Replace/OH	90	1.00	90	3	0.50	201,219	3	301,829
Bedplate	1	24,788	1.00	37,182	1	1.00	NPRD-194	0.5	1	5	5	Replace	90	1.00	56		1.00	37,182	2	74,364
Nacelle encl.	1	17,359	1.00	26,039	2.3	1.00	NPRD-71	1.1	2	1	2	Replace/OH	90	1.00	90	2	0.55	28,642	2	52,077
Converter	1	120,835	1.00	181,253	14	1.00	NPRD-68	6.6	7	1	7	Replace/OH	56	1.00	56	5	0.05	63,438	4	725,010
Power cabling	1	17,220	1.00	25,830	1	1.00	NPRD-231	0.5	1	1	1	Replace/OH	30	1.00	30	2	0.55	14,207	1	25,830
																		753,061		1,780,448
													NPV factored LRC					320,562		
									34		81		cents/kWh					0.10		0.06

Unscheduled *"other"* maintenance materials cost																		
										Crew loading		Annual component replace or overhaul					Spare inventory	
Component (1)	Qty	Original	Δ	Spare	Failures	Δ	Fail rate	Plant	Rnded	MTTR	Crew	Action	Spare	Spare cost		Annual	Spares	Cost
		Cost $ (1)		Cost $	per 10^6 h		Source	fail/y	fail/y	days	days	(6)	replensih	Notes	Factor	Cost $	Req	$
													time (days)					
Controller	1	42,925	1.00	64,388	18.3	1.00	B-D	8.6	9	1	9	Replace/OH	90	2	0.15	86,923	5	321,938
Rotor	1	295,174	1.00	442,761	8.7	1.00	B-D	4.1	5	5	25	Replace	60		0.05	110,690	3	1,328,283
Yaw	1	27,000	1.00	40,500	5.6	1.00	B-D	2.6	3	5	15	Replace/OH	84	3	0.05	6,075	3	121,500
Tower	1	230,000	1.00	345,000	0.6	1.00	GEC	0.3	1	5	5	Replace	56		0.05	17,250	2	690,000
																220,938		2,461,721
													NPV factored LRC			94,049		
									18		54		cents/kWh			0.03		0.08

Table 3: Unscheduled 1.5-MW MS-1 Inputs

Unscheduled *drive train* maintenance materials cost																				
										Crew loading		Annual component replace or overhaul							Spare inventory	
Component (1)	Qty	Original	Δ	Spare	Failures	Δ	Fail rate	Plant	Rnd	MTTR	Crew	Action	Spare Repl. Time(days)			Spare cost		Annual	Spares	Cost
		Cost $ (1)		Cost $	per 10^6 h		Source	fail/y	fail/y	days	days	(6)	Calc.	Δ	Orig.	Notes	Factor	Cost $	Req	$
													time (days)							
Main shaft	1	0	1.00	0	0.0	1.00	NPRD-184	0.0	0	0	0	Replace/OH	0	1.00	0	2	0.00	0	0	0
Main bearing	1	36,000	1.00	54,000	2.8	1.00	NPRD-13	1.3	2	5	10	Replace	56	1.00	56		1.00	108,000	2	108,000
Gearbox	1	46,881	1.00	70,322	9.6	1.00	NPRD-104	4.5	5	5	25	Replace/OH	90	1.00	90	3	0.50	175,804	4	281,286
Gearbox mount	1	0	1.00	0	0	1.00	NPRD-144	0.0	0	0	0	Replace	0	1.00	0		0.00	0	0	0
Brake system	1	20,751	1.00	31,127	4.3	1.00	NPRD-24	2.0	3	1	3	Replace/OH	56	1.00	56	3	0.25	23,345	2	62,253
HS coupling	0	0	1.00	0	0	1.00	NPRD-71	0.0	0	0	0	Replace	0	1.00	0		0.00	0	0	0
Rotor slipring	1	1,397	1.00	2,096	17.9	1.00	NPRD-84	8.4	9	1	9	Replace	56	1.00	56		1.00	18,860	4	8,382
Generator	6	168,730	1.00	253,095	2.69	1.00	NPRD-106	7.6	8	5	40	Replace/OH	90	1.00	90	3	0.50	1,012,380	5	1,265,475
Bedplate	1	23,026	1.00	34,539	1	1.00	NPRD-194	0.5	1	5	5	Replace	90	1.00	90		1.00	34,539	1	34,539
Nacelle encl.	1	17,359	1.00	26,039	2.3	1.00	NPRD-71	1.1	2	1	2	Replace/OH	90	1.00	90	2	0.55	28,642	2	52,077
Converter	1	146,629	1.00	219,944	14	1.00	NPRD-68	6.6	7	1	7	Replace/OH	56	1.00	56	5	0.05	76,980	4	879,774
Power cabling	1	17,220	1.00	25,830	1	1.00	NPRD-231	0.5	1	1	1	Replace/OH	30	1.00	30	2	0.55	14,207	1	25,830
																		1,478,550		2,691,786
													NPV factored LRC					629,386		
									38		101		cents/kWh					0.19		0.09

Unscheduled *"other"* maintenance materials cost																		
										Crew loading		Annual component replace or overhaul					Spare inventory	
Component (1)	Qty	Original	Δ	Spare	Failures	Δ	Fail rate	Plant	Rnded	MTTR	Crew	Action	Spare	Spare cost		Annual	Spares	Cost
		Cost $ (1)		Cost $	per 10^6 h		Source	fail/y	fail/y	days	days	(6)	replensih	Notes	Factor	Cost $	Req	$
													time (days)					
Controller	1	42,925	1.00	64,388	18.3	1.00	B-D	8.6	9	1	9	Replace/OH	90	2	0.15	86,923	5	321,938
Rotor	1	295,174	1.00	442,761	8.7	1.00	B-D	4.1	5	5	25	Replace	60		0.05	110,690	3	1,328,283
Yaw	1	27,000	1.00	40,500	5.6	1.00	B-D	2.6	3	5	15	Replace/OH	84	3	0.05	6,075	3	121,500
Tower	1	230,000	1.00	345,000	0.6	1.00	GEC	0.3	1	5	5	Replace	56		0.05	17,250	1	345,000
																220,938		2,116,721
													NPV factored LRC			94,049		
									18		54		cents/kWh			0.03		0.07

Table 4: Unscheduled 1.5-MW MS-6 Inputs

Unscheduled *drive train* maintenance materials cost																			
										Crew loading		Annual component replace or overhaul						Spare inventory	
Component (1)	Qty	Original	Δ	Spare	Failures	Δ	Fail rate	Plant	Rnd	MTTR	Crew	Action	Spare Repl. Time(days)			Spare cost		Annual	Spares	Cost
		Cost $ (1)		Cost $	per 10^6 h		Source	fail/y	fail/y	days	days	(6)	Calc.	Δ	Orig.	Notes	Factor	Cost $	Req	$
													time (days)							
Main shaft	1	42,597	1.00	63,896	1.2	1.00	NPRD-184	0.3	1	5	5	Replace/OH	84	1.00	84	2	0.55	35,143	2	127,791
Main bearing	1	20,875	1.00	31,313	1.4	1.00	NPRD-13	0.4	1	5	5	Replace	56	1.00	56		1.00	31,313	2	62,625
Gearbox	1	210,459	1.00	315,689	10.7	1.00	NPRD-104	2.7	3	5	15	Replace/OH	90	1.00	90	3	0.50	473,533	3	947,066
Gearbox mount	1	8,000	1.00	12,000	4	1.00	NPRD-144	1.0	2	1	2	Replace	70	1.00	70		1.00	24,000	2	24,000
Brake system	1	14,246	1.00	21,369	4.3	1.00	NPRD-24	1.1	2	1	2	Replace/OH	56	1.00	56	3	0.25	10,685	2	42,738
HS coupling	1	6,463	1.00	9,695	0.4	1.00	NPRD-71	0.1	1	1	1	Replace	56	1.00	56		1.00	9,695	2	19,389
Rotor slipring	1	1,397	1.00	2,096	17.9	1.00	NPRD-84	4.5	5	1	5	Replace	56	1.00	56		1.00	10,478	3	6,287
Generator	1	102,000	1.00	153,000	9.3	1.00	NPRD-106	2.4	3	5	15	Replace/OH	90	1.00	90	3	0.25	114,750	3	459,000
Bedplate	1	81,845	1.00	122,768	1	1.00	NPRD-194	0.3	1	5	5	Replace	56	1.00	56		1.00	122,768	2	245,535
Nacelle encl.	1	40,000	1.00	60,000	2.3	1.00	NPRD-71	0.6	1	1	1	Replace/OH	90	1.00	90	2	0.55	33,000	2	120,000
Converter	1	115,302	1.00	172,953	14	1.00	NPRD-68	3.6	4	1	4	Replace/OH	56	1.00	56	5	0.05	34,591	3	518,859
Power cabling	1	38,000	1.00	57,000	1	1.00	NPRD-231	0.3	1	1	1	Replace/OH	30	1.00	30	2	0.55	31,350	1	57,000
																		899,952		2,573,289
													NPV factored LRC					383,090		
									25		60		cents/kWh					0.11		0.06

Unscheduled *"othe* r" maintenance materials cost																			
										Crew loading		Annual component replace or overhaul					Spare inventory		
Component (1)	Qty	Original	Δ	Spare	Failures	Δ	Fail rate	Plant	Rnded	MTTR	Crew	Action	Spare	Spare cost		Annual	Spares	Cost	
		Cost $ (1)		Cost $	per 10^6 h		Source	fail/y	fail/y	days	days	(6)	replensih	Notes	Factor	Cost $	Req	$	
													time (days)						
Controller	1	57,000	1.00	85,500	18.3	1.00	B-D	4.7	5	1	5	Replace/OH	90	2	0.15	64,125	4	342,000	
Rotor	1	455,212	1.00	682,818	8.7	1.00	B-D	2.2	3	5	15	Replace	60		0.05	102,423	2	1,365,636	
Yaw	1	52,280	1.00	78,420	5.6	1.00	B-D	1.4	2	5	10	Replace/OH	84	3	0.05	7,842	2	156,840	
Tower	1	484,546	1.00	726,819	0.6	1.00	GEC	0.2	1	5	5	Replace	56		0.05	36,341	2	1,453,638	
																210,731		3,318,114	
													NPV factored LRC			89,703			
									11		35		cents/kWh			0.03		0.07	

Table 5: Unscheduled 3.0-MW Baseline Inputs

Unscheduled *drive train* maintenance materials cost																			
										Crew loading		Annual component replace or overhaul						Spare inventory	
Component (1)	Qty	Original	Δ	Spare	Failures	Δ	Fail rate	Plant	Rnd	MTTR	Crew	Action	Spare Repl. Time(days)			Spare cost		Annual	Spares	Cost
		Cost $ (1)		Cost $	per 10^6 h		Source	fail/y	fail/y	days	days	(6)	Calc.	Δ	Orig.	Notes	Factor	Cost $	Req	$
													time (days)							
Main shaft	0	0	1.00	0	0.0	1.00	NPRD-184	0.0	0	0	0	Replace/OH	0	1.00	0	2	0.00	0	0	0
Main bearing	0	45,000	1.00	67,500	2.8	1.00	NPRD-13	0.0	0	5	0	Replace	56	1.00	56		1.00	0	0	0
Gearbox	0	0	1.00	0	0	1.00	NPRD-104	0.0	0	0	0	Replace/OH	0	1.00	0	3	0.00	0	0	0
Gearbox mount	0	0	1.00	0	0	1.00	NPRD-144	0.0	0	0	0	Replace	0	1.00	0		0.00	0	0	0
Brake system	1	13,739	1.00	20,609	4.3	1.00	NPRD-24	1.1	2	1	2	Replace/OH	56	1.00	56	3	0.25	10,304	2	41,217
HS coupling	0	0	1.00	0	0	1.00	NPRD-71	0.0	0	0	0	Replace	0	1.00	0		0.00	0	0	0
Rotor slipring	1	1,397	1.00	2,096	17.9	1.00	NPRD-84	4.5	5	1	5	Replace	56	1.00	56		1.00	10,478	3	6,287
Generator	1	444,869	1.00	667,304	4.3	1.00	NPRD-106	1.1	2	5	10	Replace/OH	90	1.00	90	3	0.25	333,652	2	1,334,607
Bedplate	1	24,489	1.00	36,734	1	1.00	NPRD-194	0.3	1	5	5	Replace	90	1.00	90		1.00	36,734	2	73,467
Nacelle encl.	1	35,000	1.00	52,500	2.3	1.00	NPRD-71	0.6	1	1	1	Replace/OH	90	1.00	90	2	0.55	28,875	2	105,000
Converter	1	179,905	1.00	269,858	14	1.00	NPRD-68	3.6	4	1	4	Replace/OH	56	1.00	56	5	0.05	53,972	3	809,573
Power cabling	1	38,000	1.00	57,000	1	1.00	NPRD-231	0.3	1	1	1	Replace/OH	30	1.00	30	2	0.55	31,350	1	57,000
																		474,014		2,370,150
													NPV factored LRC					201,777		
									16		27		cents/kWh					0.06		0.05

Unscheduled *"othe* r" maintenance materials cost																		
										Crew loading		Annual component replace or overhaul					Spare inventory	
Component (1)	Qty	Original	Δ	Spare	Failures	Δ	Fail rate	Plant	Rnded	MTTR	Crew	Action	Spare	Spare cost		Annual	Spares	Cost
		Cost $ (1)		Cost $	per 10^6 h		Source	fail/y	fail/y	days	days	(6)	replensih	Notes	Factor	Cost $	Req	$
													time (days)					
Controller	1	57,000	1.00	85,500	18.3	1.00	B-D	4.7	5	1	5	Replace/OH	90	2	0.15	64,125	4	342,000
Rotor	1	455,212	1.00	682,818	8.7	1.00	B-D	2.2	3	5	15	Replace	60		0.05	102,423	2	1,365,636
Yaw	1	52,280	1.00	78,420	5.6	1.00	B-D	1.4	2	5	10	Replace/OH	84	3	0.05	7,842	2	156,840
Tower	1	484,546	1.00	726,819	0.6	1.00	GEC	0.2	1	5	5	Replace	56		0.05	36,341	2	1,453,638
																210,731		3,318,114
													NPV factored LRC			89,703		
									11		35		cents/kWh			0.03		0.07

Table 6: Unscheduled 3.0-MW Direct-Drive Inputs

Unscheduled *drive train* maintenance materials cost																			
										Crew loading		Annual component replace or overhaul						Spare inventory	
Component (1)	Qty	Original	Δ	Spare	Failures	Δ	Fail rate	Plant	Rnd	MTTR	Crew	Action	Spare Repl. Time(days)			Spare cost		Annual	Spares	Cost
		Cost $ (1)		Cost $	per 10^6 h		Source	fail/y	fail/y	days	days	(6)	Calc.	Δ	Orig.	Notes	Factor	Cost $	Req	$
													time (days)							
Main shaft	1	0	1.00	0	0.0	1.00	NPRD-184	0.0	0	0	0	Replace/OH	0	1.00	0	2	0.00	0	0	0
Main bearing	1	45,000	1.00	67,500	2.8	1.00	NPRD-13	0.7	1	5	5	Replace	56	1.00	56		1.00	67,500	2	135,000
Gearbox	1	172,522	1.00	258,783	8.6	1.00	NPRD-104	2.2	3	5	15	Replace/OH	90	1.00	90	3	0.50	388,175	3	776,349
Gearbox mount	1	0	1.00	0	0	1.00	NPRD-144	0.0	0	0	0	Replace	0	1.00	0		0.00	0	0	0
Brake system	1	26,253	1.00	39,380	4.3	1.00	NPRD-24	1.1	2	1	2	Replace/OH	56	1.00	56	3	0.25	19,690	2	78,759
HS coupling	1	0	1.00	0	0	1.00	NPRD-71	0.0	0	0	0	Replace	0	1.00	0		0.00	0	0	0
Rotor slipring	1	1,397	1.00	2,096	17.9	1.00	NPRD-84	4.5	5	1	5	Replace	56	1.00	56		1.00	10,478	3	6,287
Generator	1	150,901	1.00	226,352	7.161	1.00	NPRD-106	1.8	2	5	10	Replace/OH	90	1.00	90	3	0.25	113,176	2	452,703
Bedplate	1	49,996	1.00	74,994	1	1.00	NPRD-194	0.3	1	5	5	Replace	90	1.00	90		1.00	74,994	2	149,988
Nacelle encl.	1	30,000	1.00	45,000	2.3	1.00	NPRD-71	0.6	1	1	1	Replace/OH	90	1.00	90	2	0.55	24,750	2	90,000
Converter	1	179,905	1.00	269,858	14	1.00	NPRD-68	3.6	4	1	4	Replace/OH	56	1.00	56	5	0.05	53,972	3	809,573
Power cabling	1	38,000	1.00	57,000	1	1.00	NPRD-231	0.3	1	1	1	Replace/OH	30	1.00	30	2	0.55	31,350	1	57,000
																		752,733		2,498,658
													NPV factored LRC					320,422		
									20		47		cents/kWh					0.09		0.05

Unscheduled *"othe* r" maintenance materials cost																		
										Crew loading		Annual component replace or overhaul					Spare inventory	
Component (1)	Qty	Original	Δ	Spare	Failures	Δ	Fail rate	Plant	Rnded	MTTR	Crew	Action	Spare	Spare cost		Annual	Spares	Cost
		Cost $ (1)		Cost $	per 10^6 h		Source	fail/y	fail/y	days	days	(6)	replensih	Notes	Factor	Cost $	Req	$
													time (days)					
Controller	1	57,000	1.00	85,500	18.3	1.00	B-D	4.7	5	1	5	Replace/OH	90	2	0.15	64,125	4	342,000
Rotor	1	455,212	1.00	682,818	8.7	1.00	B-D	2.2	3	5	15	Replace	60		0.05	102,423	2	1,365,636
Yaw	1	52,280	1.00	78,420	5.6	1.00	B-D	1.4	2	5	10	Replace/OH	84	3	0.05	7,842	2	156,840
Tower	1	484,546	1.00	726,819	0.6	1.00	GEC	0.2	1	5	5	Replace	56		0.05	36,341	2	1,453,638
																210,731		3,318,114
													NPV factored LRC			89,703		
									11		35		cents/kWh			0.03		0.07

Table 7: Unscheduled 3.0-MW MS-1 Inputs

8. Appendix 3: Results

Table 1: Results Summary Page
Graph 1: 1.5 MW Baseline Sensitivity Graph
Graph 2: Unscheduled 1.5 MW Direct Drive Sensitivity Graph
Graph 3: Unscheduled 1.5 MW MS-1 Sensitivity Graph
Graph 4: Unscheduled 1.5 MW MS-6 Sensitivity Graph
Graph 5: Unscheduled 3.0 MW Baseline Sensitivity Graph
Graph 6: Unscheduled 3.0 MW Direct Drive Sensitivity Graph
Graph 7: Unscheduled 3.0 MW MS-1 Sensitivity Graph

Summary of O&M Costs (cents/kWh)								
Rating	1.5 MW	1.5 MW	1.5 MW	1.5 MW	3.0 MW	3.0 MW	3.0 MW	Note
Design	Baseline	Direct	Single	Multipath	Baseline	Direct	Single	
		Drive	Stage			Drive	Stage	
Cost center	c/kWh							
Scheduled burdened labor	0.037	0.037	0.037	0.037	0.034	0.034	0.034	
Unscheduled burdened labor	0.039	0.039	0.039	0.039	0.036	0.036	0.036	7
Scheduled materials	0.041	0.011	0.041	0.041	0.022	0.006	0.022	
Unscheduled materials - drive train	0.133	0.050	0.098	0.193	0.109	0.058	0.091	7
Unscheduled materials - other	0.029	0.029	0.029	0.029	0.026	0.026	0.026	7
Unscheduled spares - drive train	0.057	0.057	0.057	0.088	0.050	0.049	0.050	8
Unscheduled spares - other	0.069	0.069	0.069	0.069	0.056	0.056	0.056	8
Equipment	0.105	0.105	0.105	0.105	0.070	0.070	0.070	
Equipment maintenance	0.030	0.030	0.030	0.030	0.027	0.027	0.027	
G&A	0.057	0.057	0.057	0.057	0.053	0.053	0.053	
Totals	0.60	0.48	0.56	0.69	0.48	0.42	0.47	
Per unit cost wrt baseline								

Notes:
(7): Levelized cost of replacement (LRC) item based on NPV of uniform annual outlay for materials and labor
(8): Levelized cost of replacement (LRC) item based on initial cost uniformly distributed over plant life

Table 1: Results Summary Page

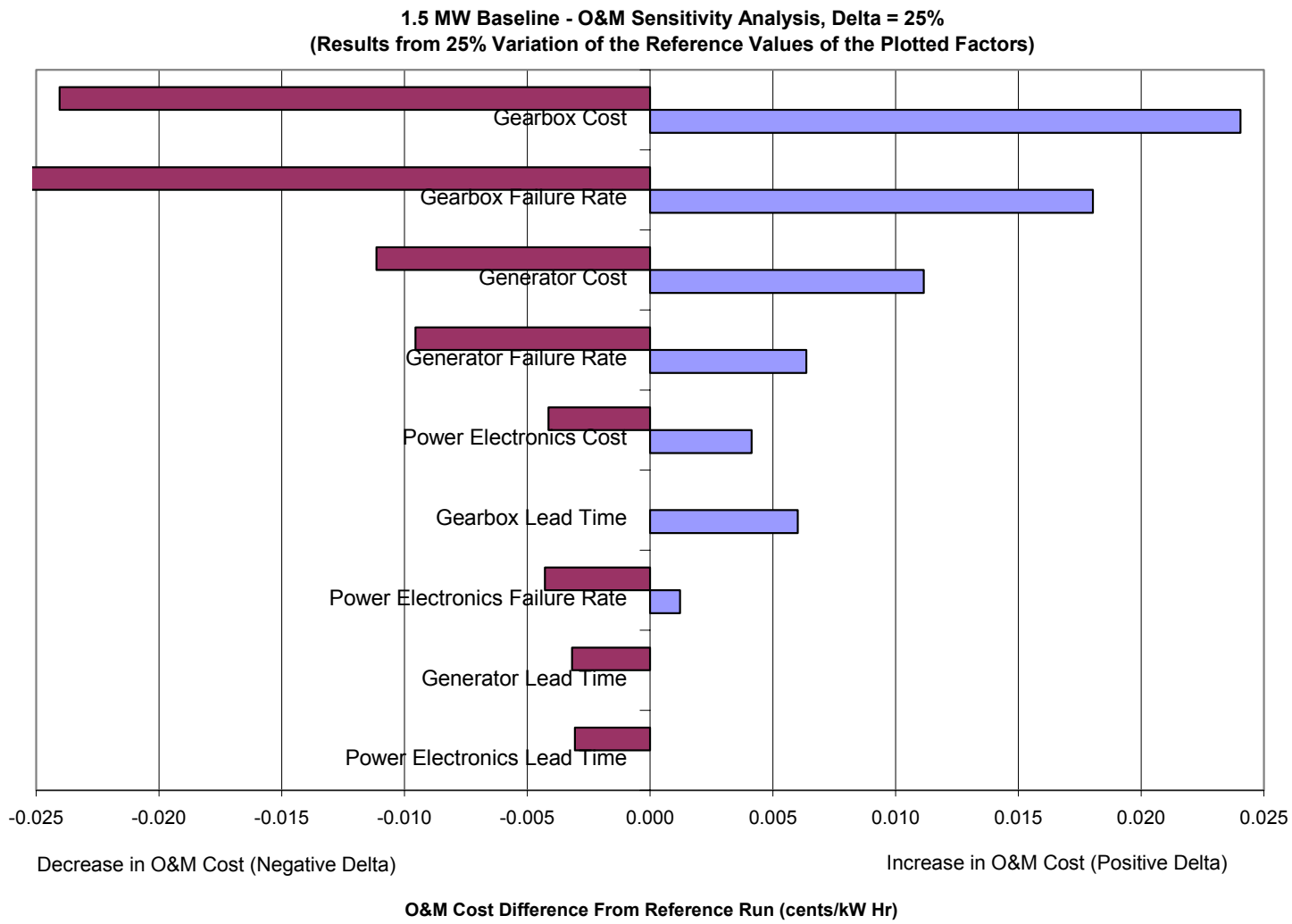

Graph 1: 1.5-MW Baseline Sensitivity Graph

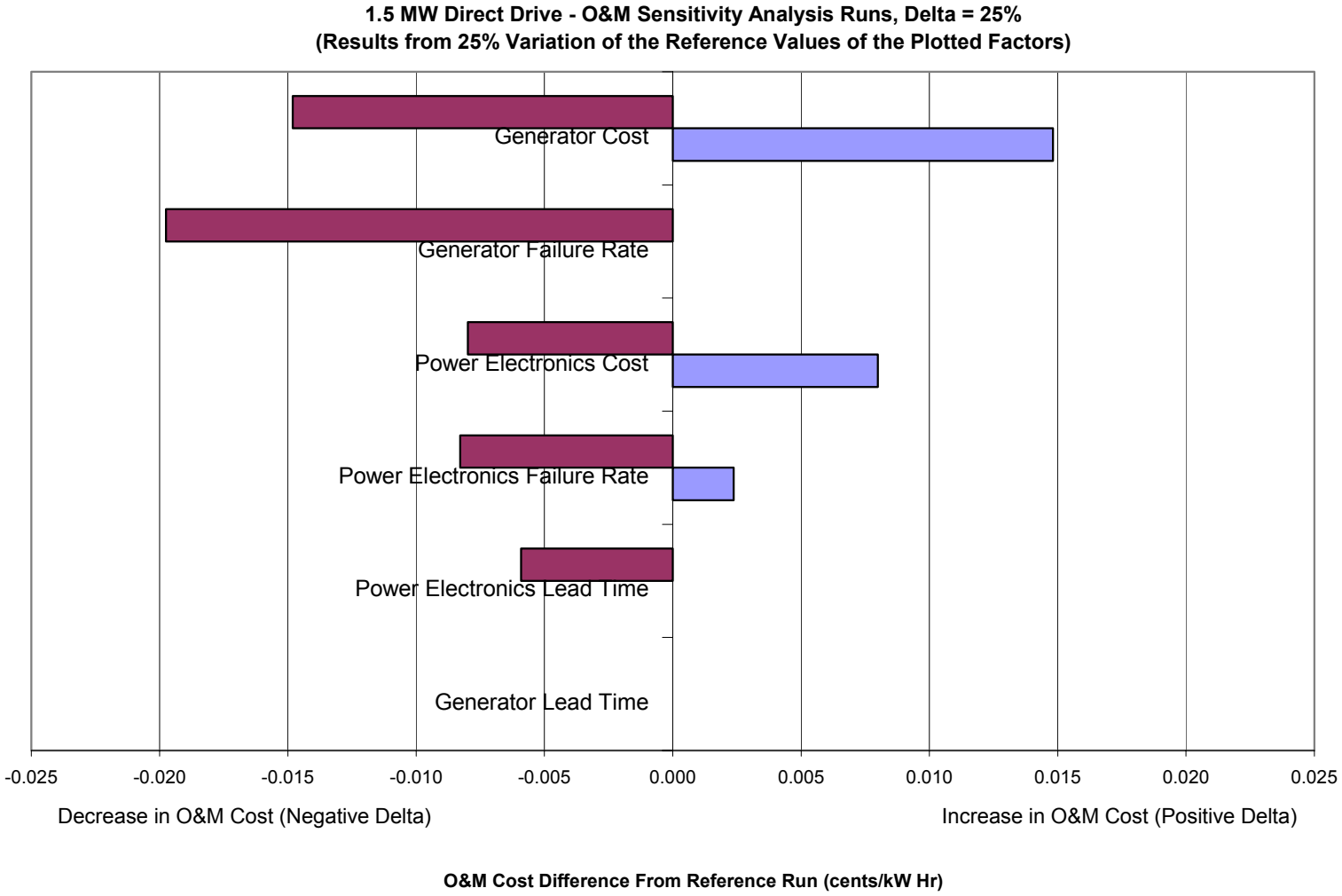

Graph 2: Unscheduled 1.5-MW Direct Drive Sensitivity Graph

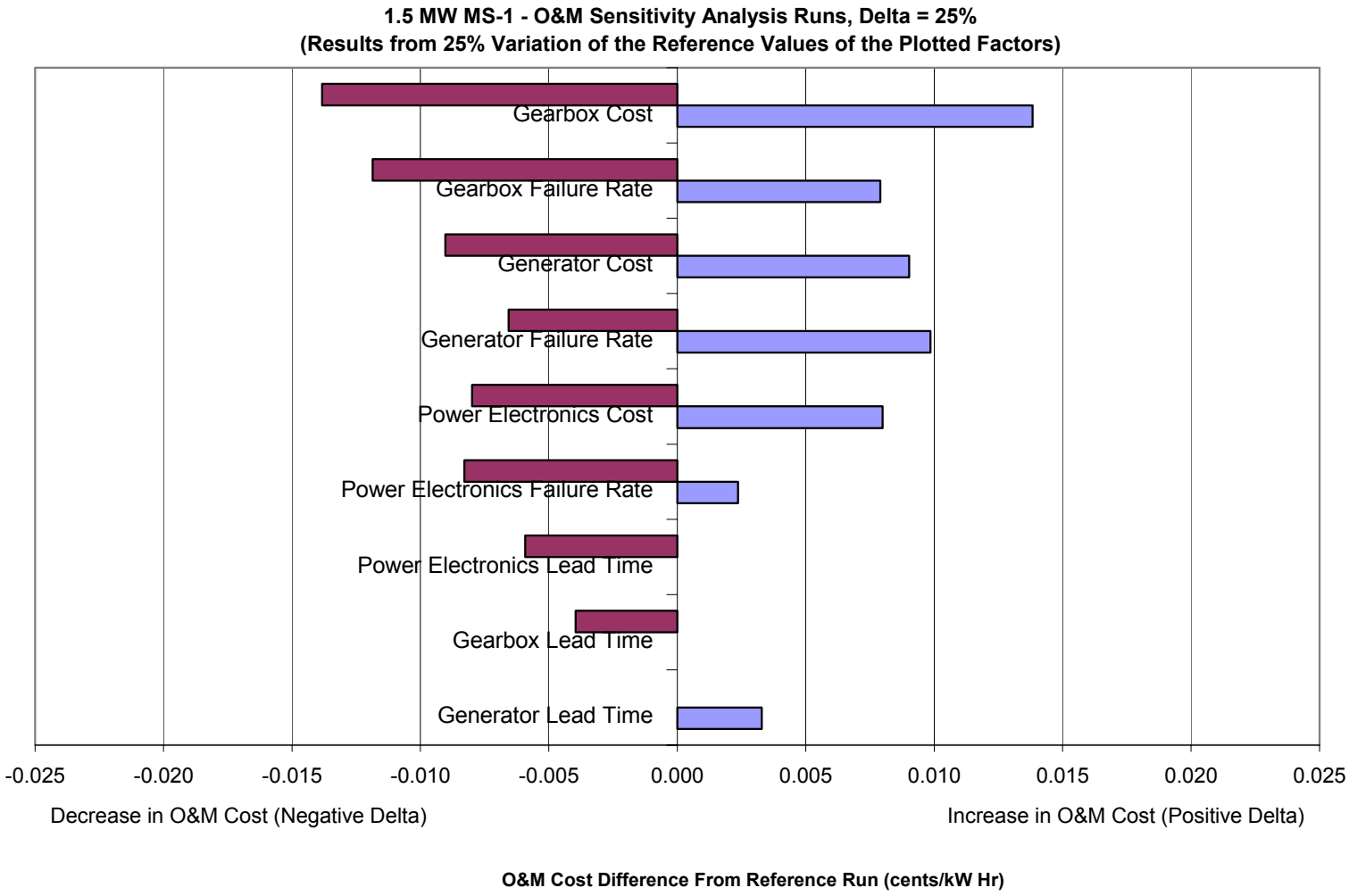

Graph 3: Unscheduled 1.5-MW MS-1 Sensitivity Graph

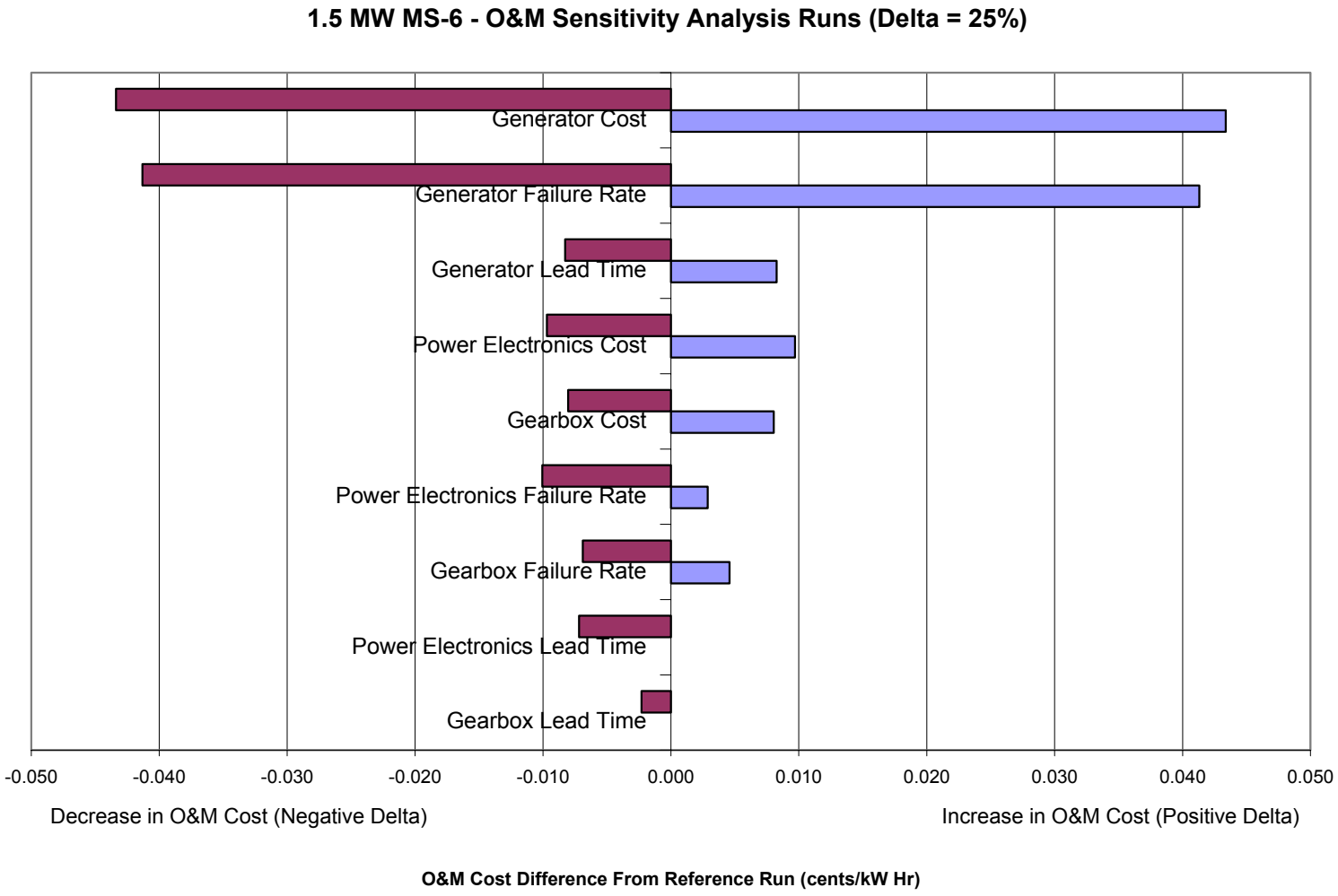

Graph 4: Unscheduled 1.5-MW MS-6 Sensitivity Graph

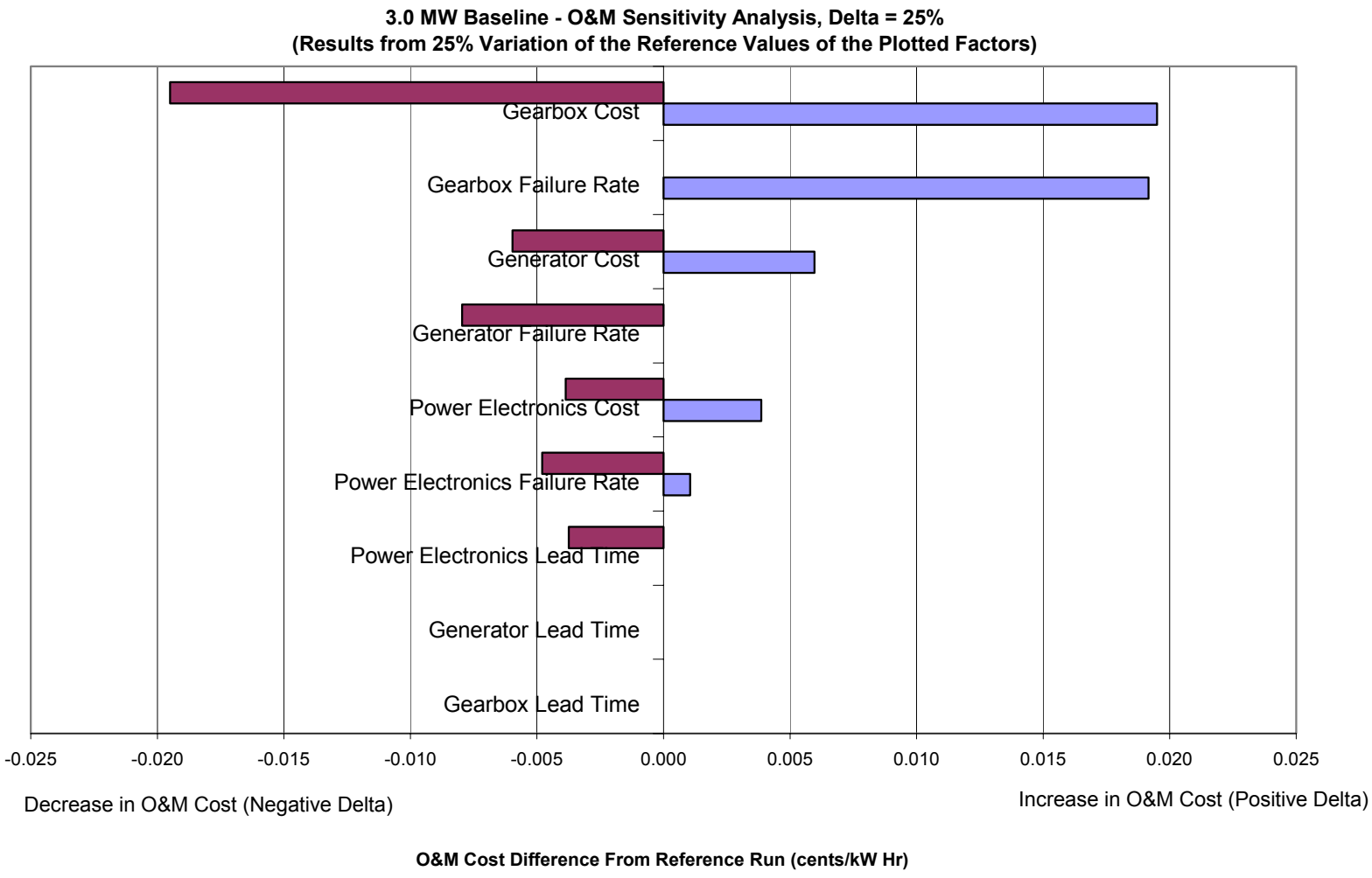

Graph 5: Unscheduled 3.0-MW Baseline Sensitivity Graph

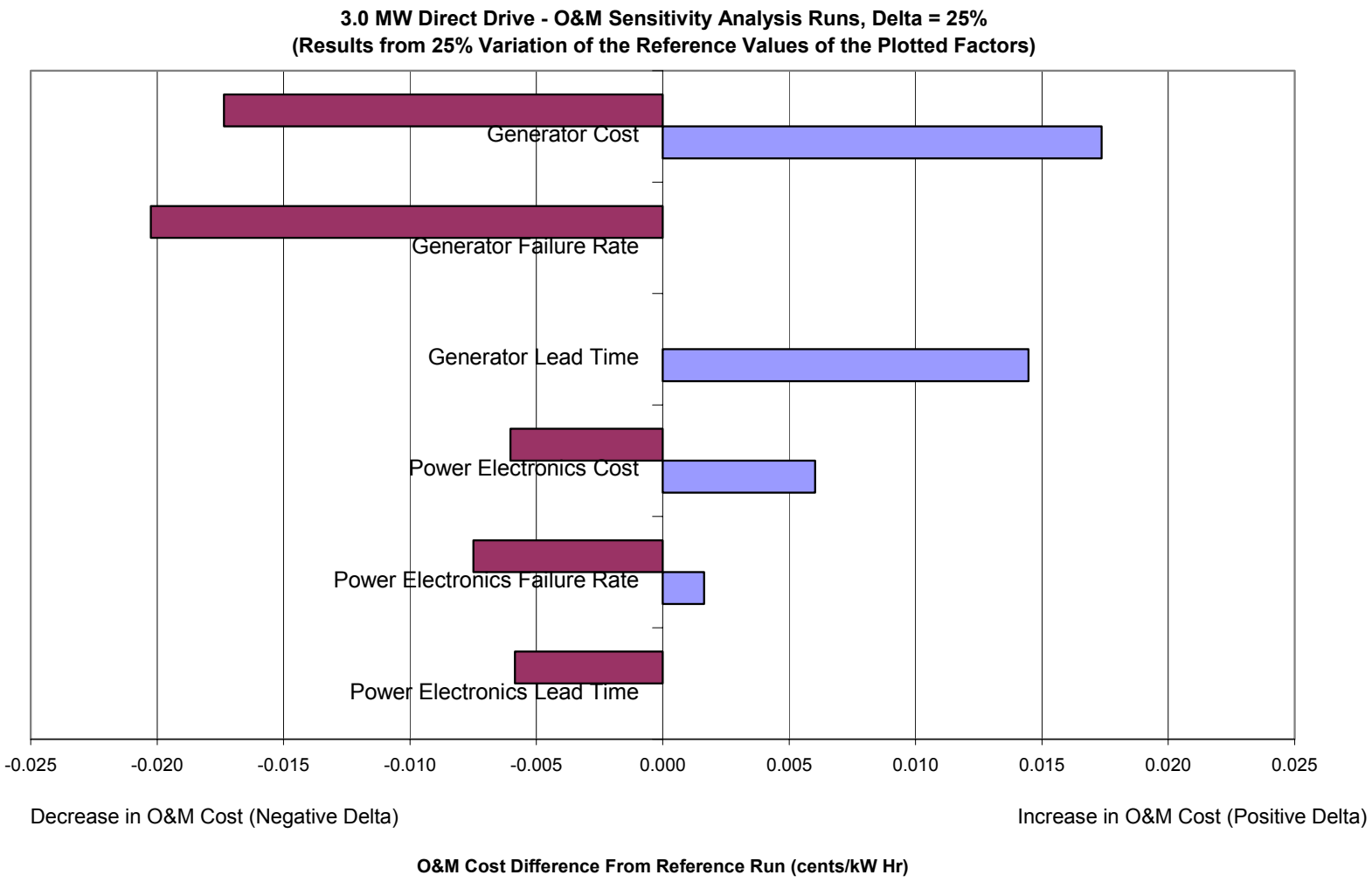

Graph 6: Unscheduled 3.0-MW Direct Drive Sensitivity Graph

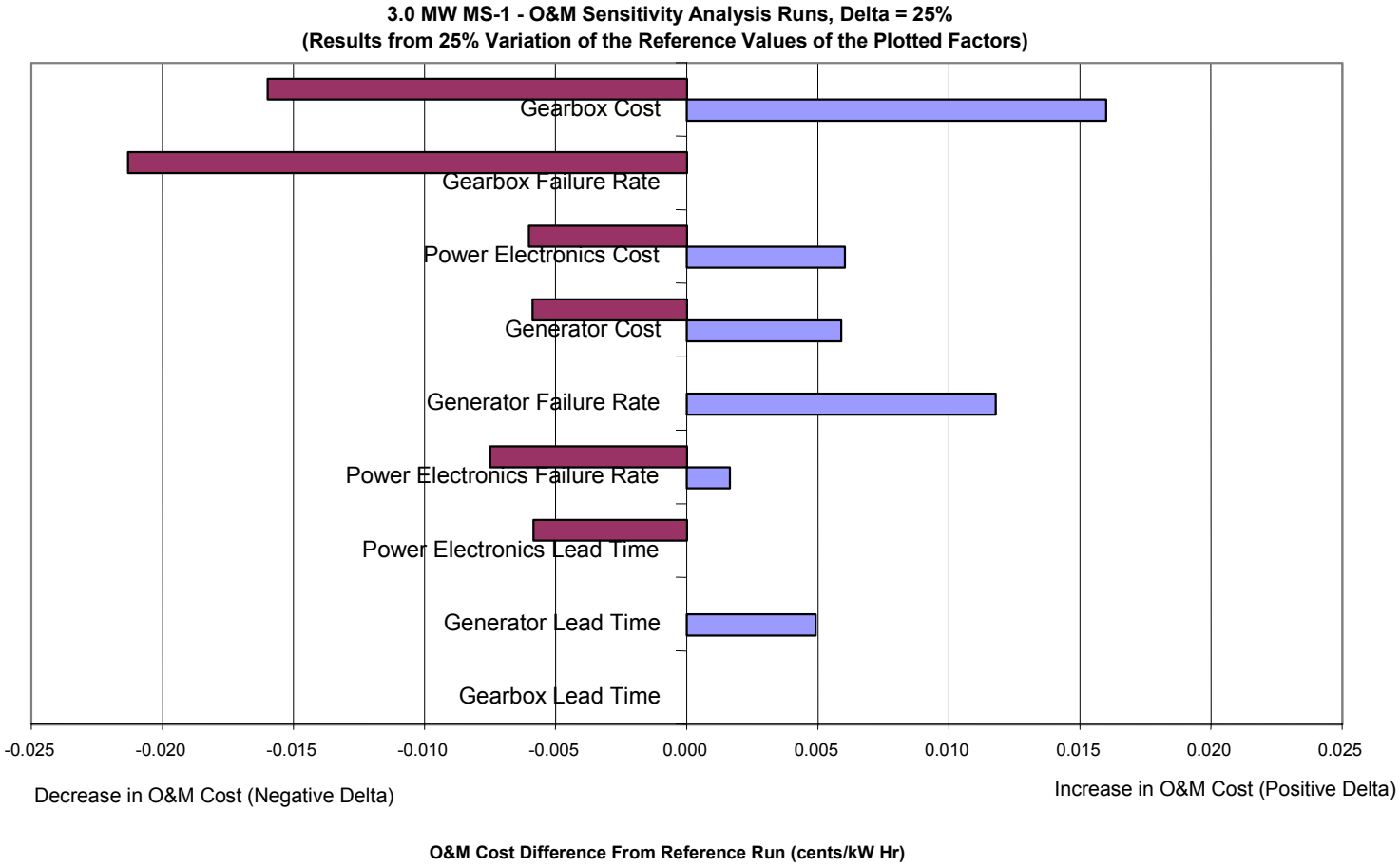

Graph 7: Unscheduled 3.0-MW MS-1 Sensitivity Graph

9. Appendix 4: Erlang C Multi-Server Queuing Model

A well-known procedure for estimating waiting time for multi-server systems was employed to objectively estimate the number of spares required to assure timely availability of these components for unscheduled repairs. A similar multi-server situation is presented by a customer service desk which must be staffed by an appropriate number of agents N to assure an acceptable delay D to service customer calls of average duration T which arrive at a rate of R.

This analysis is widely applied in the telephone and data industry and is based on application of a procedure developed long ago by Erlang. The characteristics of this particular class of problems is accommodated by the so-called Erlang C model for which a procedure is readily available as a macro which may be run under Excel®.

In the case of the spares analysis the Erlang C model is applied with the following equivalences:

Spares case		Service desk case
Average time to replace or overhaul a part	=	Average service call duration T
Number of spares	=	Number of service agents N
Number of failures/time	=	Number of calls/time R
Waiting time	=	Waiting time W

Time units are scaled for this application as follows:

- 1 hour = 1 year
- 1 second = 1/3,600 year
- 1 day ~ 1/360 year or 10 seconds

The Erlang C procedure calculates the required number of spares to assure a user specified acceptable availability delay with a user specified probability. The acceptable delay (days) and probability (% of time) are entered in the Generic parameters table.

The Erlang C macro is provided by Westbay Engineers. Users of this O&M analysis procedure will need to purchase and download the macro from Westbay at http://www.erlang.com/traffic.html. The cost is approximately $75. The Westbay Excel® add in *function name* is **ErlCAgents** and is under *User Defined Function Category*. Function input arguments are:

Calls/hr (h), Call Duration (s), Percentage (%), and Percentage Time (s)

Hence, as an example…

- 1 spare request/year entered as 1 call/hour
- 90 day spare replenish time entered as 90 x 10 = 900 seconds
- Percent of time spare available in less than acceptable delay entered as 90 %
- 1 day acceptable availability delay entered as 1 x 10 = 10 seconds

For further information see www.erlang.com which also provides a free use version of the calculator. The on-line calculator can be used to determine spare levels if the Excel add-in function is not available to the user of this workbook. In that case spare estimates can be manually entered into the appropriate cells.

10. Appendix 5: Unscheduled Maintenance, Crew and Equipment Waiting Time Analysis Methodology

Method

Three components of turbine down time are considered for major and minor unscheduled repairs:

- Wait for crew and equipment – see below
- Wait for replacement parts if not in stock – assumed zero to simplify this analysis
- Average MTTR for 1 and 5 day jobs = 3 days for Baseline case – considered nominal for others

Wait for crew and equipment is estimated by a single server queue analysis:

• Average rate of requests for service	λ
• Average repair rate	μ
• Average wait for crew and equipment	W
• Average wait computed as	$W = \lambda/\mu(\mu-\lambda)$

Average down time is then computed:

• Wait for crew and equipment	W
• Average MTTR	MTTR
• Turbine down time per event	TDT = W + MTTR
• Total annual turbine operating days	TAOD = Operating days x # of turbines
• Average availability loss per event	AAL = TDT / WSOD x 100%
• Estimated annual failures	EAF
• Availability loss	EAF x AAL

Example

Wait for crew and equipment is estimated by a single server queue analysis:

• Average rate of requests for service	λ = 1 / 5 days = 0.20 / day
• Average repair rate	μ = 1 / 3 days = 0.33 /day
• Average wait for crew and equipment	W
• Average wait computed as	$W = \lambda/\mu(\mu-\lambda)$ = 4.7 days

Average down time is then computed

• Wait for crew and equipment	W = 4.7 days
• Average MTTR	MTTR = 3.0
• Turbine down time per event	TDT = W + MTTR = 7.7 days

• Total annual turbine operating days	TAOD = Operating days x # of turbines TAOD = 300 days x 67 turbines = 20,100 days
• Average availability loss per event	AAL = TDT / WSOD x 100% AAL = (7.7 / 20,100) x 100% = 0.038%
• Estimated annual failures	EAF = 71
• Availability loss	EAF x AAL = 71 x 0.038% = 2.7%

Appendix J

NW3000 LOADS SPECIFICATION

B						
A		Original	29 Nov 2002	GLB/JWS	GLB	
Rev.	Pages Affected	Description	Date	Prepared By	Approved By	Project Approval

Northern Power Systems
Waitsfield, VT 05673
(802) 496-2955

Table of Contents

1.0 Introduction 3
2.0 References and Standards 3
3.0 Turbine Description 3
3.1 Specifications 3
4.0 Coordinate Systems 4
5.0 Design Loads 5
5.1 Extreme Loads 5
5.2 Cyclic Fatigue Loads 5
5.3 Bearing Fatigue Loads 6
5.4 Torque Duration Curves 10

Table of Tables

Table 1. Turbine Specifications 3
Table 2 Extreme Loads 5
Table 3 Damage Equivalent Fatigue Loads 5
Table 4 S/N curve parameters 6
Table 5 Bearing Fatigue Loads 7
Table 6 Torque Duration Curve 10

Table of Figures

Figure 1. Hub Coordinate System 4

1.0 Introduction

This document outlines the drivetrain loads for the 3.0MW turbine with specifications given in Table 1 below. The loads were calculated in accordance with the wind turbine design standard IEC 61400-1[1].
The document covers extreme loads, cyclic fatigue loads, bearing loads, and gearbox loads. Coordinate systems are given in Figure 1. The loads are derived from the loads document [3].

2.0 References and Standards

[1] International Electrotechnical Commision, Wind Turbine Generator Systems-Part 1: Safety Requirements. International Standard 61400-1, 2nd Edition, 1998.

[2] Germanischer Lloyd, Rules and Regulations, IV Non-Marine Technology, Part 1-Regulations for the Certification of Wind Energy Conversion Systems, 1999.

[3] WindPACTLoadsDoc_A.doc

3.0 Turbine Description

3.1 Specifications

The following specifications are included for reference purposes.

Parameter	Value	Units
Diameter	94.8	m
Power Rating	3000	kW
Max Power	3300	kW
Rated Speed	15.3	RPM
Operating Speed Range ($n_1 - n_2$)	16.8	RPM
Maximum Operating (Initiate shutdown,n_A)	19.3	RPM
Maximum Overspeed (Abs Limit, n_{max})	21.8	RPM
Hub Height	112	m
Cut in Wind Speed	3	mps
Rated Wind Speed	12	mps
Cut Out Wind Speed	25	mps
Design Class	II	-
Design Life	20	years

Table 1. Turbine Specifications

4.0 Coordinate Systems

The coordinate systems corresponds to that used in [2]. The coordinate system is located at the rotor center and does not rotate with the rotor. All loads are given with respect to this coordinate system except the damage equivalent loads MyS and MzS which are calculated in the non-rotating frame.

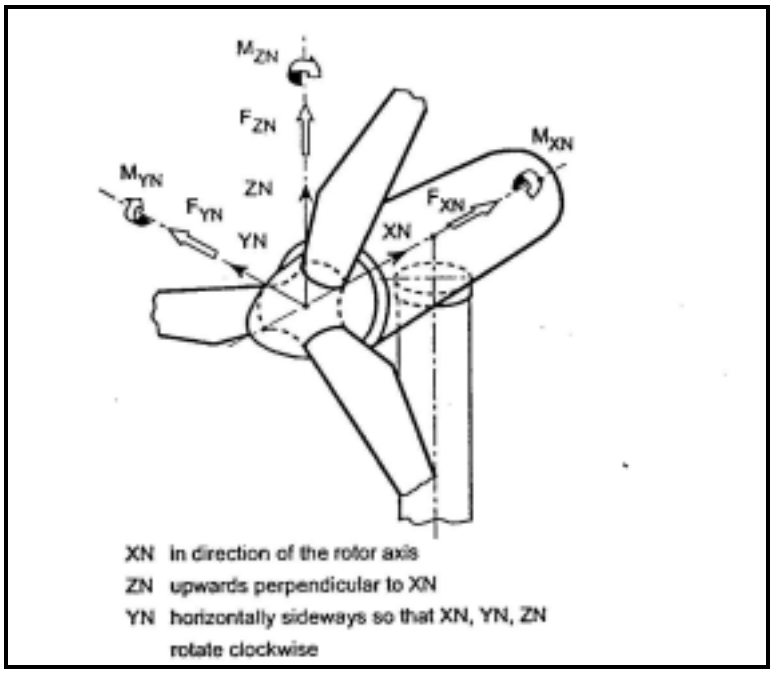

Figure 1. Hub Coordinate System

5.0 Design Loads

5.1 Extreme Loads

Fixed frame hub center loads, at x = 1.4 meters
Units are kN and kNm
File: 3MWextremeCombined_A.xls

Parameter	Type	FxS	FyS	FzS	MxS	MyS	MzS
		kN	kN	kN	kNm	kNm	kNm
FxThrustS	Min	**-69.2**	35.5	-594.3	2786.4	-417.8	-798.8
FxThrustS	Max	**665.3**	16.4	-599.9	2675.7	2069.6	2340.9
FySFixed	Min	200.1	**-72.6**	-560.8	2771.6	4623.8	-316.0
FySFixed	Max	211.1	**123.9**	-564.6	2804.0	-2442.2	-2386.8
FzSFixed	Min	345.1	2.9	**-675.3**	2667.6	968.6	3969.0
FzSFixed	Max	87.1	5.8	**-453.9**	2808.0	1559.3	-5741.6
MxTorqS	Min	73.8	0.4	-580.4	**361.0**	760.1	53.7
MxTorqS	Max	226.7	-42.2	-578.6	**2822.9**	3786.8	33.9
MyS-fix	Min	115.1	84.5	-576.3	2774.3	**-4469.9**	-1049.0
MyS-fix	Max	217.9	-57.4	-582.0	2782.4	**5629.5**	303.1
MzS-fix	Min	85.0	6.6	-477.0	2795.9	1034.0	**-6706.8**
MzS-fix	Max	344.8	20.2	-661.6	2785.1	22.0	**4986.9**

Table 2 Extreme Loads

5.2 Cyclic Fatigue Loads

Hub center loads. Loads in fixed frame, with the exception of MyS and MzS, which are rotating frame.
Units are kNm
File: NW3000_95_DELComputations_RevA.xls
Neq = 2E06 cycles
L_D = 20 years

Damage Equivalent Loads (Req)				
For m = >>>	3	5	8.8	12.5
MxTorqS[X]	1188.2	1170.7	1284.2	1369.7
MyS[X]	11141.5	6994.9	5601.3	5465.6
MzS[X]	11130.5	7012.8	5661.0	5549.2
MyS-fix[X]	6270.3	4357.4	4271.1	4586.1
MzS-fix[X]	6282.0	4351.7	4326.5	4763.2

Table 3 Damage Equivalent Fatigue Loads

For the given number of cycles Neq, and material exponent m, with the distribution of range loads described by the vector [ni ,Ri] where ni is the number of cycles of load Ri

$$Req = [\ (\Sigma n_i\ R_i^{m)}\ /Neq\ ]^{(1/m)}$$

Part life is given by:

$$L = L_D * [a(uReq)^{-m}]/Neq$$

Where u is the unit stress function (stress/load) for the section/detail in question.

Damage at design life is given by:

$$D = L_D * 1/L$$

Material/Process/Loading	m
Steel/Welded, Bolts	3.0
Iron Casting	8.8
Steel / Forging	12.5
Steel / Shear Loading	5.0

Table 4 S/N curve parameters

5.3 Bearing Fatigue Loads

Table 5 gives the coordinated loads at the given rotor speed, for the number of hours shown.
Both yearly and 20 year lifetime hours are shown.
Load units are kN and kNm.
Abbreviations: abs, Absolute Value; rms, Root Mean Square; RPM, rotations per minute; fixed, fixed frame coordinates
File: 3MWBearingLoadsClassI_RevA.xls

Table 5 Bearing Fatigue Loads

Load Case	FxThrust (kN)	My (kNm)	abs(Mz) (kNm)	abs(Fy) (kN)	Fz,fixed (kN)	rms RPM	Hours/year	Hours/lifetime
1	75	-500	500	6.63	429.0	9.2	0.93	18.5
2	75	500	500	2.46	432.1	8.1	918.28	18365.5
3	75	500	1500	3.45	439.1	8.4	0.71	14.2
4	75	1500	500	3.71	433.0	8.4	351.32	7026.3
5	75	500	500	3.09	434.1	12.9	0.31	6.2
6	75	1500	500	1.75	432.4	9.7	0.54	10.8
7	75	-3500	500	69.31	437.2	15.2	0.06	1.3
8	75	-3500	1500	95.88	416.4	15.1	0.03	0.5
9	75	-3500	2500	43.00	390.2	15.2	0.02	0.4
10	75	-3500	3500	42.50	384.5	15.1	0.01	0.3
11	75	-2500	500	56.99	432.1	15.4	0.68	13.6
12	75	-2500	1500	60.37	417.4	15.4	0.65	12.9
13	75	-2500	2500	55.69	402.7	15.3	0.16	3.2
14	75	-2500	3500	48.90	389.3	15.3	0.04	0.8
15	75	-1500	500	39.18	433.3	15.3	10.11	202.2
16	75	-1500	1500	41.87	420.0	15.3	5.02	100.4
17	75	-1500	2500	43.89	403.5	15.3	1.38	27.6
18	75	-1500	3500	41.94	383.9	15.1	0.11	2.2
19	75	-500	500	24.70	430.8	15.4	44.03	880.7
20	75	-500	1500	25.75	417.0	15.3	22.76	455.1
21	75	-500	2500	27.96	402.6	15.3	5.10	102.0
22	75	-500	3500	24.70	384.5	15.3	0.38	7.6
23	75	500	500	12.32	430.1	15.3	76.63	1532.6
24	75	500	1500	13.33	417.3	15.3	35.08	701.6
25	75	500	2500	16.59	399.2	15.3	6.50	130.1
26	75	500	3500	14.27	382.0	15.3	1.05	21.1
27	75	1500	500	11.15	429.8	15.3	43.40	867.9
28	75	1500	1500	11.61	415.6	15.3	17.36	347.2
29	75	1500	2500	11.92	395.5	15.4	3.54	70.8
30	75	1500	3500	13.65	380.2	15.4	0.82	16.3
31	75	2500	500	20.05	430.1	15.4	7.46	149.2
32	75	2500	1500	21.65	417.7	15.4	3.39	67.7
33	75	2500	2500	22.51	397.1	15.4	0.68	13.6
34	75	2500	3500	22.74	370.7	15.4	0.21	4.1
35	75	3500	500	32.06	432.5	15.5	0.46	9.3
36	75	3500	1500	27.52	419.0	15.5	0.22	4.3
37	75	3500	2500	32.15	406.6	15.2	0.06	1.2
38	75	3500	3500	28.05	372.8	15.3	0.03	0.6
39	225	-500	500	9.03	432.2	10.8	5.18	103.6
40	225	-500	1500	11.25	440.0	11.6	1.23	24.5
41	225	500	500	3.28	432.7	10.6	1137.60	22752.0
42	225	500	1500	6.48	441.5	11.4	15.66	313.1
43	225	1500	500	3.76	435.1	11.0	1127.16	22543.1

44	225	1500	1500	3.33	443.9	11.7	23.87	477.3
45	225	2500	500	9.10	439.9	12.2	3.79	75.8
46	225	2500	1500	7.03	448.6	12.7	0.82	16.4
47	225	-1500	500	17.38	423.5	15.2	0.28	5.6
48	225	-500	500	13.18	429.3	15.4	10.48	209.6
49	225	-500	1500	13.42	438.6	15.2	1.17	23.5
50	225	500	500	5.09	432.4	14.6	200.19	4003.9
51	225	500	1500	7.10	442.6	14.8	14.84	296.8
52	225	500	2500	2.76	452.8	15.5	0.02	0.3
53	225	1500	500	5.34	435.7	13.3	281.71	5634.2
54	225	1500	1500	4.60	443.3	13.7	20.16	403.2
55	225	1500	2500	2.94	456.0	15.5	0.09	1.9
56	225	2500	500	12.75	437.8	14.0	8.49	169.7
57	225	2500	1500	9.70	446.3	13.5	0.76	15.1
58	225	3500	500	25.17	438.8	14.9	0.05	0.9
59	225	-2500	500	51.29	435.4	15.3	0.89	17.9
60	225	-2500	1500	53.83	425.2	15.2	0.59	11.8
61	225	-2500	2500	53.19	436.4	15.7	0.03	0.6
62	225	-1500	500	36.94	431.8	15.3	15.86	317.2
63	225	-1500	1500	39.60	426.1	15.3	6.08	121.6
64	225	-1500	2500	40.00	419.3	15.5	0.76	15.3
65	225	-1500	3500	35.76	462.1	15.5	0.03	0.6
66	225	-500	500	21.17	430.8	15.3	153.61	3072.3
67	225	-500	1500	22.28	427.8	15.4	41.18	823.7
68	225	-500	2500	25.43	418.4	15.4	3.83	76.7
69	225	-500	3500	19.49	401.7	15.5	0.14	2.7
70	225	500	500	9.65	431.2	15.3	561.88	11237.7
71	225	500	1500	10.50	429.7	15.3	109.80	2196.1
72	225	500	2500	11.92	421.0	15.4	7.71	154.3
73	225	500	3500	10.97	405.4	15.3	0.35	7.1
74	225	1500	500	9.48	432.3	15.3	374.71	7494.1
75	225	1500	1500	10.12	431.8	15.3	75.32	1506.4
76	225	1500	2500	11.11	421.4	15.4	5.69	113.9
77	225	1500	3500	16.52	405.7	15.6	0.29	5.9
78	225	2500	500	19.32	433.4	15.3	50.18	1003.5
79	225	2500	1500	19.57	432.6	15.3	12.66	253.2
80	225	2500	2500	22.12	422.0	15.4	1.17	23.5
81	225	2500	3500	31.89	394.6	15.4	0.05	1.0
82	225	3500	500	31.24	435.0	15.3	1.83	36.6
83	225	3500	1500	32.21	433.0	15.3	0.79	15.8
84	225	3500	2500	39.42	417.0	15.4	0.06	1.3
85	225	3500	3500	41.83	387.1	15.1	0.01	0.3
86	375	-500	500	8.25	426.7	13.0	0.55	10.9
87	375	500	500	4.35	433.6	13.1	50.73	1014.7
88	375	500	1500	5.40	443.1	13.2	0.76	15.3
89	375	1500	500	3.80	437.4	13.2	87.58	1751.7
90	375	1500	1500	3.51	446.0	12.9	3.16	63.3
91	375	2500	500	7.26	441.1	13.0	2.13	42.6

92	375	2500	1500	2.32	446.0	12.6	0.08	1.6
93	375	-500	500	14.26	427.8	15.3	13.12	262.5
94	375	-500	1500	16.34	439.2	15.3	3.22	64.3
95	375	500	500	5.87	433.1	14.8	460.99	9219.7
96	375	500	1500	9.19	441.6	15.0	64.80	1296.1
97	375	500	2500	13.25	452.3	15.4	0.49	9.9
98	375	1500	500	4.37	436.7	14.6	835.34	16706.8
99	375	1500	1500	4.70	444.2	14.7	136.53	2730.7
100	375	1500	2500	6.69	453.4	15.3	0.43	8.7
101	375	2500	500	9.22	440.0	14.7	40.13	802.6
102	375	2500	1500	5.84	447.5	14.5	5.92	118.4
103	375	2500	2500	2.35	457.6	14.8	0.08	1.5
104	375	3500	500	19.94	442.4	14.9	0.23	4.6
105	375	-1500	500	28.17	423.2	15.1	0.09	1.8
106	375	-1500	1500	30.32	443.8	15.4	0.05	1.0
107	375	-1500	2500	35.00	460.1	15.4	0.00	0.1
108	375	-500	500	18.47	429.5	15.3	4.46	89.1
109	375	-500	1500	19.45	442.2	15.3	1.40	27.9
110	375	-500	2500	23.66	455.6	15.3	0.20	4.0
111	375	500	500	7.85	431.8	15.2	45.34	906.9
112	375	500	1500	10.68	443.6	15.2	13.22	264.4
113	375	500	2500	14.87	459.0	15.3	0.72	14.4
114	375	500	3500	16.60	476.0	14.7	0.04	0.7
115	375	1500	500	7.07	434.2	15.2	64.73	1294.5
116	375	1500	1500	6.54	445.0	15.1	17.28	345.6
117	375	1500	2500	7.61	456.9	15.2	0.54	10.8
118	375	2500	500	14.47	437.2	15.1	11.25	224.9
119	375	2500	1500	10.54	448.6	15.1	4.15	83.0
120	375	2500	2500	6.61	462.2	15.6	0.12	2.5
121	375	3500	500	23.53	446.0	15.0	0.33	6.5
122	375	3500	1500	22.71	459.8	15.3	0.12	2.5
123	525	500	500	6.90	433.1	15.1	2.04	40.8
124	525	500	1500	10.79	443.3	15.2	0.68	13.6
125	525	1500	500	4.24	437.3	15.1	6.49	129.9
126	525	1500	1500	6.09	444.0	15.1	3.83	76.7
127	525	1500	2500	7.24	456.2	15.2	0.17	3.4
128	525	2500	500	7.69	439.3	15.0	0.88	17.6
129	525	2500	1500	3.34	447.0	15.1	0.40	8.0
130	525	500	500	6.37	432.7	15.0	0.15	2.9
131	525	500	1500	10.17	437.9	15.0	0.03	0.5
132	525	1500	500	5.67	435.6	14.9	0.42	8.4
133	525	1500	1500	5.86	443.6	15.0	0.81	16.2
134	525	2500	500	7.19	442.9	14.9	0.33	6.7
135	525	2500	1500	5.89	450.2	15.1	0.40	8.1
136	525	2500	2500	9.39	468.5	15.4	0.01	0.2

5.4 Torque Duration Curves

Rotor diameter 94.8 meters. Tables values are lifetime hours at the given torque and speed.
Units for Torque are kNm. File: 3MWToqrueDurationClassII_RevA.xls

Table 6 Torque Duration Curve

Shaft	RPM											
Torque	5.5	6.5	7.5	8.5	9.5	10.5	11.5	12.5	13.5	14.5	15.5	16.5
275	305	0	0	0	0	0	0	0	0	0	0	0
325	81	164	0	0	0	0	0	0	0	0	0	0
375	0	1278	0	0	0	0	0	0	0	0	0	0
425	0	1848	771	0	0	0	0	0	0	0	0	0
475	0	0	2231	0	0	0	0	0	0	0	0	0
525	0	0	3072	0	0	0	0	0	0	0	0	0
575	0	0	1130	2836	0	0	0	0	0	0	0	0
625	0	0	0	5447	0	0	0	0	0	0	0	0
675	0	0	0	6325	0	0	0	0	0	0	0	0
725	0	0	0	2027	4534	0	0	0	0	0	0	0
775	0	0	0	0	5646	0	0	0	0	0	0	0
825	0	0	0	0	4396	0	0	0	0	0	0	0
875	0	0	0	0	2470	1624	0	0	0	0	0	0
925	0	0	0	0	0	3727	0	0	0	0	0	0
975	0	0	0	0	0	5389	0	0	0	0	0	0
1025	0	0	0	0	0	4546	0	0	0	0	0	0
1075	0	0	0	0	0	1379	3244	0	0	0	0	0
1125	0	0	0	0	0	0	4476	0	0	0	0	0
1175	0	0	0	0	0	0	4132	0	0	0	0	0
1225	0	0	0	0	0	0	4113	0	0	0	0	0
1275	0	0	0	0	0	0	968	2011	0	0	0	0
1325	0	0	0	0	0	0	0	3165	0	0	0	0
1375	0	0	0	0	0	0	0	3217	0	0	0	0
1425	0	0	0	0	0	0	0	2937	0	0	0	0
1475	0	0	0	0	0	0	0	1697	453	0	0	0
1525	0	0	0	0	0	0	0	0	1707	0	0	0
1575	0	0	0	0	0	0	0	0	1510	0	0	0
1625	0	0	0	0	0	0	0	0	1491	0	0	0
1675	0	0	0	0	0	0	0	0	1374	0	0	0
1725	0	0	0	0	0	0	0	0	857	697	0	0
1775	0	0	0	0	0	0	0	0	0	1356	0	0
1825	0	0	0	0	0	0	0	0	0	1755	0	0
1875	0	0	0	0	0	0	0	0	0	2347	0	0
1925	0	0	0	0	0	0	0	0	0	3611	0	0
1975	0	0	0	0	0	0	0	0	0	3271	3178	0
2025	0	0	0	0	0	0	0	0	0	0	10768	0
2075	0	0	0	0	0	0	0	0	0	0	21180	290

REPORT DOCUMENTATION PAGE

Form Approved
OMB No. 0704-0188

The public reporting burden for this collection of information is estimated to average 1 hour per response, including the time for reviewing instructions, searching existing data sources, gathering and maintaining the data needed, and completing and reviewing the collection of information. Send comments regarding this burden estimate or any other aspect of this collection of information, including suggestions for reducing the burden, to Department of Defense, Executive Services and Communications Directorate (0704-0188). Respondents should be aware that notwithstanding any other provision of law, no person shall be subject to any penalty for failing to comply with a collection of information if it does not display a currently valid OMB control number.
PLEASE DO NOT RETURN YOUR FORM TO THE ABOVE ORGANIZATION.

1. REPORT DATE *(DD-MM-YYYY)*
October 2004

2. REPORT TYPE
Subcontractor Report

3. DATES COVERED *(From - To)*
April 12, 2001 – January 31, 2005

4. TITLE AND SUBTITLE
Northern Power Systems WindPACT Drive Train Alternative Design Study Report: April 12, 2001 to January 31, 2005

5a. CONTRACT NUMBER
DE-AC36-99-GO10337

5b. GRANT NUMBER

5c. PROGRAM ELEMENT NUMBER

6. AUTHOR(S)
G. Bywaters, V. John, J. Lynch, P. Mattila, G. Norton, J. Stowell, M. Salata, O. Labath, A. Chertok, and D. Hablanian

5d. PROJECT NUMBER
NREL/SR-500-35524

5e. TASK NUMBER
WER4.3507

5f. WORK UNIT NUMBER

7. PERFORMING ORGANIZATION NAME(S) AND ADDRESS(ES)
Northern Power Systems
182 Mad River Park
Waitsfield, VT 05673

8. PERFORMING ORGANIZATION REPORT NUMBER
YCX-1-30209-02

9. SPONSORING/MONITORING AGENCY NAME(S) AND ADDRESS(ES)
National Renewable Energy Laboratory
1617 Cole Blvd.
Golden, CO 80401-3393

10. SPONSOR/MONITOR'S ACRONYM(S)
NREL

11. SPONSORING/MONITORING AGENCY REPORT NUMBER
NREL/SR-500-35524

12. DISTRIBUTION AVAILABILITY STATEMENT
National Technical Information Service
U.S. Department of Commerce
5285 Port Royal Road
Springfield, VA 22161

13. SUPPLEMENTARY NOTES
NREL Technical Monitor: Alan Laxson

14. ABSTRACT *(Maximum 200 Words)*
The National Renewable Energy Laboratory (NREL) Wind Partnerships for Advanced Component Technologies (WindPACT) project seeks to advance wind turbine technology by exploring innovative concepts in drivetrain design. A team led by Northern Power Systems (Northern) of Waitsfield, Vermont, was chosen to perform this work. Conducted under subcontract YCX-1-30209-02, project objectives are to identify, design, and test a megawatt (MW)-scale drivetrain with the lowest overall life cycle cost. The project entails three phases: preliminary study of alternative drivetrain designs (Phase I), detailed design development (Phase II), and proof of concept fabrication and test (Phase III). This report summarizes the results of the preliminary design study (Phase I).

15. SUBJECT TERMS
wind turbine; wind energy; WindPACT; Northern Power Systems; wind turbine design

16. SECURITY CLASSIFICATION OF:

a. REPORT	b. ABSTRACT	c. THIS PAGE	17. LIMITATION OF ABSTRACT	18. NUMBER OF PAGES	19a. NAME OF RESPONSIBLE PERSON
Unclassified	Unclassified	Unclassified	UL		19b. TELEPONE NUMBER (*Include area code*)

Standard Form 298 (Rev. 8/98)
Prescribed by ANSI Std. Z39.18