A national laboratory of the U.S. Department of Energy
Office of Energy Efficiency & Renewable Energy

National Renewable Energy Laboratory

Innovation for Our Energy Future

Thermochemical Ethanol via Indirect Gasification and Mixed Alcohol Synthesis of Lignocellulosic Biomass

Technical Report
NREL/TP-510-41168
April 2007

S. Phillips, A. Aden, J. Jechura, and D. Dayton
National Renewable Energy Laboratory

T. Eggeman
Neoterics International, Inc.

NREL is operated by Midwest Research Institute • Battelle Contract No. DE-AC36-99-GO10337

Thermochemical Ethanol via Indirect Gasification and Mixed Alcohol Synthesis of Lignocellulosic Biomass

Technical Report
NREL/TP-510-41168
April 2007

S. Phillips, A. Aden, J. Jechura, and D. Dayton
National Renewable Energy Laboratory

T. Eggeman
Neoterics International, Inc.

Prepared under Task No. BB07.3710

National Renewable Energy Laboratory
1617 Cole Boulevard, Golden, Colorado 80401-3393
303-275-3000 • www.nrel.gov

Operated for the U.S. Department of Energy
Office of Energy Efficiency and Renewable Energy
by Midwest Research Institute • Battelle

Contract No. DE-AC36-99-GO10337

NOTICE

This report was prepared as an account of work sponsored by an agency of the United States government. Neither the United States government nor any agency thereof, nor any of their employees, makes any warranty, express or implied, or assumes any legal liability or responsibility for the accuracy, completeness, or usefulness of any information, apparatus, product, or process disclosed, or represents that its use would not infringe privately owned rights. Reference herein to any specific commercial product, process, or service by trade name, trademark, manufacturer, or otherwise does not necessarily constitute or imply its endorsement, recommendation, or favoring by the United States government or any agency thereof. The views and opinions of authors expressed herein do not necessarily state or reflect those of the United States government or any agency thereof.

Available electronically at http://www.osti.gov/bridge

Available for a processing fee to U.S. Department of Energy
and its contractors, in paper, from:
U.S. Department of Energy
Office of Scientific and Technical Information
P.O. Box 62
Oak Ridge, TN 37831-0062
phone: 865.576.8401
fax: 865.576.5728
email: mailto:reports@adonis.osti.gov

Available for sale to the public, in paper, from:
U.S. Department of Commerce
National Technical Information Service
5285 Port Royal Road
Springfield, VA 22161
phone: 800.553.6847
fax: 703.605.6900
email: orders@ntis.fedworld.gov
online ordering: http://www.ntis.gov/ordering.htm

Printed on paper containing at least 50% wastepaper, including 20% postconsumer waste

1. Executive Summary

This work addresses a policy initiative by the Federal Administration to apply United States Department of Energy (DOE) research to broadening the country's domestic production of economic, flexible, and secure sources of energy fuels. President Bush stated in his 2006 State of the Union Address: "America is addicted to oil." To reduce the Nation's future demand for oil, the President has proposed the Advanced Energy Initiative which outlines significant new investments and policies to change the way we fuel our vehicles and change the way we power our homes and businesses. The specific goal for biomass in the Advanced Energy Initiative is to foster the breakthrough technologies needed to make cellulosic ethanol cost-competitive with corn-based ethanol by 2012.

In previous biomass conversion design reports by the National Renewable Energy Laboratory (NREL), a benchmark for achieving production of ethanol from cellulosic feedstocks that would be "cost competitive with corn-ethanol" has been quantified as $1.07 per gallon ethanol minimum plant gate price.

This process design and technoeconomic evaluation addresses the conversion of biomass to ethanol via thermochemical pathways that are expected to be demonstrated at the pilot-unit level by 2012. This assessment is unique in its attempt to match up:

- Currently established and published technology.
- Technology currently under development or shortly to be under development from DOE Office of Biomass Program funding.
- Biomass resource availability in the 2012 time frame consistent with the Billion Ton Vision study.

Indirect steam gasification was chosen as the technology around which this process was developed based upon previous technoeconomic studies for the production of methanol and hydrogen from biomass. The operations for ethanol production are very similar to those for methanol production (although the specific process configuration will be different). The general process areas include: feed preparation, gasification, gas cleanup and conditioning, and alcohol synthesis & purification.

The cost of ethanol as determined in this assessment was derived using technology that has been developed and demonstrated or is currently being developed as part of the OBP research program. Combined, all process, market, and financial targets in the design represent what must be achieved to obtain the reported $1.01 per gallon, showing that ethanol from a thermochemical conversion process has the possibility of being produced in a manner that is "cost competitive with corn-ethanol" by 2012. This analysis has demonstrated that forest resources can be converted to ethanol in a cost competitive manner. This allows for greater flexibility in converting biomass resources to make stated volume targets by 2030.

Table of Contents

1. Executive Summary i
2. Introduction 1
   2.1. Analysis Approach 6
   2.2. Process Design Overview 10
   2.3. Feedstock and Plant Size 12
3. Process Design 14
   3.1. Process Design Basis 14
   3.2. Feed Handling and Drying – Area 100 14
   3.3. Gasification – Area 200 15
   3.4. Gas Cleanup and Conditioning – Area 300 17
   3.5. Alcohol Synthesis – Area 400 20
   3.6. Alcohol Separation – Area 500 25
   3.7. Steam System and Power Generation – Area 600 26
   3.8. Cooling Water and Other Utilities – Area 700 28
   3.9. Additional Design Information 29
   3.10. Pinch Analysis 29
   3.11. Energy Balance 30
   3.12. Water Issues 34
4. Process Economics 35
   4.1. Capital Costs 35
   4.2. Operating Costs 38
   4.3. Value of Higher Alcohol Co-Products 41
   4.4. Minimum Ethanol Plant Gate Price 42
5. Process Economics, Sensitivity Analyses, and Alternate Scenarios 43
   5.1. Financial Scenarios 45
   5.2. Feedstocks 46
   5.3. Thermal Conversion 50
   5.4. Clean-Up & Conditioning 50
   5.5. Fuels Synthesis 50
   5.6. Markets 50
6. Conclusions 51
7. Future Work 51
8. References 53

List of Figures

Figure 1. U.S. list prices for ethanol 2
Figure 2. Estimated capital intensities for biomass-to-methanol processes 5
Figure 3. Approach to process analysis 6
Figure 4. *Chemical Engineering* Magazine's plant cost indices 9
Figure 5. Block flow diagram 10
Figure 6. Expected availability of biomass 13
Figure 7. Pinch analysis composite curve 30
Figure 8. Cost contribution details from each process area 43
Figure 9. Effect of cost year on MESP 44
Figure 10. Results of sensitivity analyses 45
Figure 11. Sensitivity analysis of biomass ash content 47
Figure 12. Sensitivity analysis of biomass moisture content 48
Figure 13. Sensitivity analysis of raw syngas diverted for heat and power due to biomass moisture content 49

List of Tables

Table 1. *Chemical Engineering* Magazine's Plant Cost Indices 8
Table 2. Ultimate Analysis of Hybrid Poplar Feed 13
Table 3. Gasifier Operating Parameters, Gas Compositions, and Efficiencies 16
Table 4. Current and Target Design Performance of Tar Reformer 17
Table 5. Target Design Tar Reformer Conditions and Outlet Gas Composition 18
Table 6. Process Conditions for Mixed Alcohols Synthesis 21
Table 7. System of Reactions for Mixed Alcohol Synthesis 23
Table 8. Mixed Alcohol Reaction Performance Results 23
Table 9. Mixed Alcohol Product Distributions 24
Table 10. Plant Power Requirements 27
Table 11. Utility and Miscellaneous Design Information 29
Table 12. Overall Energy Analysis (LHV basis) 33
Table 13. Process Water Demands for Thermochemical Ethanol 34
Table 14. General Cost Factors in Determining Total Installed Equipment Costs 35
Table 15. Cost Factors for Indirect Costs 36
Table 16. Feed Handling & Drying and Gasifier & Gas Clean Up Costs from the Literature Scaled to 2,000 tonne/day plant 36
Table 17. System Design Information for Gasification References 37
Table 18. Variable Operating Costs 38
Table 19. Labor Costs 39
Table 20. Other Fixed Costs 40
Table 21. Salary Comparison 41
Table 22. Economic Parameters 42

2. Introduction

This work addresses a policy initiative by the Federal Administration to apply United States Department of Energy (DOE) research to broadening the country's domestic production of economic, flexible, and secure sources of energy fuels. President Bush stated in his 2006 State of the Union Address: "America is addicted to oil." [1] To reduce the Nation's future demand for oil, the President has proposed the Advanced Energy Initiative [2] which outlines significant new investments and policies to change the way we fuel our vehicles and change the way we power our homes and businesses. The specific goal for biomass in the Advanced Energy Initiative is to foster the breakthrough technologies needed to make cellulosic ethanol cost-competitive with corn-based ethanol by 2012.

In previous biomass conversion design reports by the National Renewable Energy Laboratory (NREL), a benchmark for achieving production of ethanol from cellulosic feedstocks that would be "cost competitive with corn-ethanol" has been quantified as $1.07 per gallon ethanol minimum plant gate price [3] (where none of these values have been adjusted to a common cost year). The value can be put in context with the historic ethanol price data as shown in Figure 1 [4]. The $1.07 per gallon value represents the low side of the historical fuel ethanol prices. Given this historical price data, it is viewed that cellulosic ethanol would be commercially viable if it was able to meet a minimum return on investment selling at this price.

This is a cost target for this technology; it does not reflect NREL's assessment of where the technology is today. Throughout this report, two types of data will be shown: results which have been achieved presently in a laboratory or pilot plant, and results that are being targeted for technology improvement several years into the future. Only those targeted for the 2012 timeframe are included in this economic evaluation. Other economic analyses that attempt to reflect the current "state of technology" are not presented here.

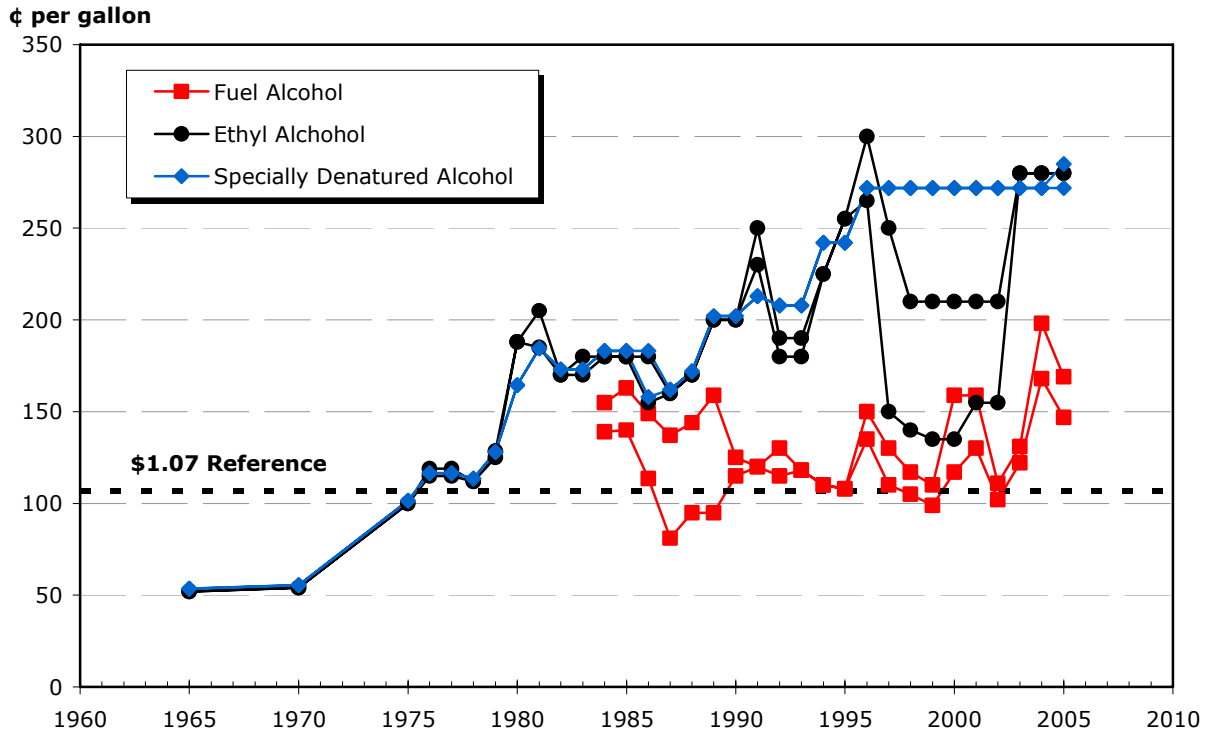

Figure 1. U.S. list prices for ethanol[a]

Conceptual process designs and associated design reports have previously been done by NREL for converting cellulosic biomass feedstock to ethanol via Biochemical pathways. Two types of biomass considered have been yellow poplar [5] and corn stover. [3] These design reports have been useful to NREL and DOE program management for two main reasons. First of all, they *enable comparison of research and development projects*. A conceptual process design helps to direct research by establishing a benchmark to which other process configurations can be compared. The anticipated results of proposed research can be translated into design changes; the economic impact of these changes can then be determined and this new design can be compared to the benchmark case. Following this procedure for several proposed research projects allows DOE to make competitive funding decisions based on which projects have the greatest potential to lower the cost of ethanol production. Complete process design and economics are required for such comparisons because changes in performance in one research area may have significant impacts in other process areas not part of that research program (e.g., impacts in product recovery or waste treatment). The impacts on the other areas may have significant and unexpected impacts on the overall economics.

Secondly, they enable c*omparison of ethanol production to other fuels.* A cost of production has also been useful to study the potential ethanol market penetration from technologies to convert lignocellulosic biomass to ethanol. The cost estimates developed must be consistent with

[a] The curve marked "Ethyl Alcohol" is for 190 proof, USP, tax-free, in tanks, delivered to the East Coast. That marked "Specially Denatured Alcohol" is for SDA 29, in tanks, delivered to the East Coast, and denatured with ethyl acetate. That marked "Fuel Alcohol" is for 200 proof, fob works, bulk, and denatured with gasoline.

applicable engineering, construction, and operating practices for facilities of this type. The complete process (including not only industry-standard process components but also the newly researched areas) must be designed and their costs determined.

Following the methodology of the biochemical design reports, this process design and techno-economic evaluation addresses the conversion of biomass to ethanol via thermochemical (TC) pathways that are expected to be demonstrated at the pilot-unit level by 2012. This assessment is unique in its attempt to match up:

- Currently established and published technology.
- Technology currently under development or shortly to be under development from DOE Office of Biomass Program (OBP) funding. (See Appendix B for these research targets and values.)
- Biomass resource availability in the 2012 time frame consistent with the Billion Ton Vision study [6].

This process design and associated report provides a benchmark for the Thermochemical Platform just as the Aden et al. report [3] has been used as a benchmark for the Biochemical Platform since 2002. It is also complementary to gasification-based conversion assessments done by NREL and others. This assessment directly builds upon an initial analysis for the TC production of ethanol and other alcohol co-products [7, 8], which, in turn, was based upon a detailed design and economic analysis for the production of hydrogen from biomass.[9] This design report is also complementary to other studies being funded by the DOE OBP, including the RBAEF (Role of Biomass in America's Energy Future) study [10]. However, the RBAEF study differs in many ways from this study. For example, RBAEF is designed for a further time horizon than 2012. It is based on a different feedstock, switchgrass, and it considers a variety of thermochemical product options, including ethanol, power and Fischer-Tropsch liquids [11]. Other notable gasification studies have been completed by Larsen at Princeton University, including a study examining the bioproduct potential of Kraft mill black liquor based upon gasification [12].

Indirect steam gasification was chosen as the technology around which this process was developed based upon previous technoeconomic studies for the production of methanol and hydrogen from biomass [13]. The sub-process operations for ethanol production are very similar to those for methanol production (although the specific process configuration will be different). The general process areas include: feed preparation, gasification, gas cleanup and conditioning, and alcohol synthesis & purification.

Gasification involves the devolatilization and conversion of biomass in an atmosphere of steam and/or oxygen to produce a medium-calorific value gas. There are two general classes of gasifiers. *Partial oxidation (POX)* gasifiers (directly-heated gasifiers) use the exothermic reaction between oxygen and organics to provide the heat necessary to devolatilize biomass and to convert residual carbon-rich chars. In POX gasifiers, the heat to drive the process is generated internally within the gasifier. A disadvantage of POX gasifiers is that oxygen production is expensive and typically requires large plant sizes to improve economics [14].

The second general class, *steam gasifiers* (indirectly-heated gasifiers), accomplish biomass heating and gasification through heat transfer from a hot solid or through a heat transfer surface. Either byproduct char and/or a portion of the product gas can be combusted with air (external to the gasifier itself) to provide the energy required for gasification. Steam gasifiers have the advantage of not requiring oxygen; but since most operate at low pressure they require product gas compression for downstream purification and synthesis unit operations. The erosion of refractory due to circulating hot solids in an indirect gasifier can also present some potential operational difficulties.

A number of POX and steam gasifiers are under development and have the potential to produce a synthesis gas suitable for liquid fuel synthesis. These gasifiers have been operated in the 4 to 350 ton per day scale. The decision as to which type of gasifier (POX or steam) will be the most economic depends upon the entire process, not just the cost for the gasifier itself. One indicator for comparing processes is "capital intensity," the capital cost required on a per unit product basis. Figure 2 shows the capital intensity of methanol processes [15, 16, 17, 18, 19, 20] based on indirect steam gasification and direct POX gasification. This figure shows that steam gasification capital intensity is comparable or lower than POX gasification. The estimates indicate that both steam gasification and POX gasification processes should be evaluated, but if the processes need to be evaluated sequentially, choosing steam gasification for the first evaluation is reasonable.

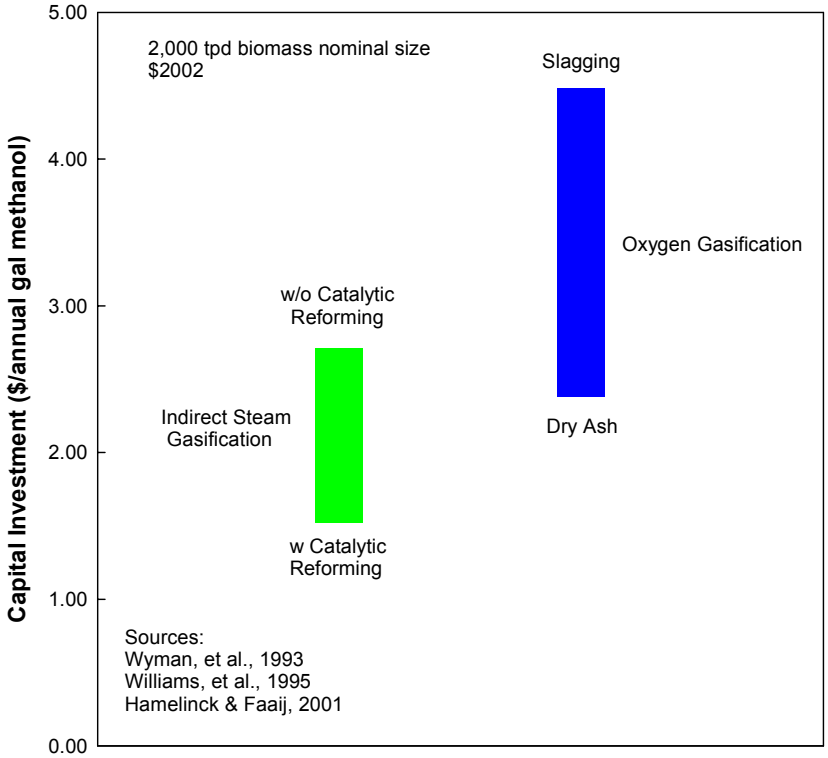

Figure 2. Estimated capital intensities for biomass-to-methanol processes

Another philosophy applied to the process development was the idea to make the process energy self-sufficient. It was recognized that the heat and power requirements of the process could not be met just with char combustion and would require additional fuel. Several options were considered. Additional biomass could be added as fuel directly to the heat and power system, however, this would increase the process beyond 2,000 tonne/day. Fossil fuels (coal or natural gas) could also be added directly to provide the additional fuel. Alternately syngas could be diverted from liquid fuel production to heat and power production. This option makes the design more energy self-sufficient, but also lowers the overall process yield of alcohols.

It was decided that (1) no additional fuel would be used for heat and power and (2) only enough syngas would be diverted so that the internal heat and power requirements would be exactly met. Thus, there would neither be electricity sales to the grid nor electricity purchases. The only exception to this would be if other operating specifications were such that syngas could no longer be backed out of the heat and power system but there is still excess electricity (that could then be sold to the grid for a co-product credit). This resulted in 28% of the unconditioned syngas being diverted to power the process. Model calculations show that if none of the syngas was diverted in this manner, and all of it was used for mixed alcohols production, the ethanol and higher alcohols yields would increase by 38%. Thus, the baseline ethanol yield of 80.1 gal/dry ton could rise as high as 110.9 gal/ton, with total production of all alcohols as high as 130.3

gal/dry ton. However, the minimum ethanol plant gate price increases in this scenario because of the cost of the natural gas required to meet the energy demands of the process.

2.1. Analysis Approach

The general approach used in the development of the process design, process model, and economic analysis is depicted in Figure 3. The first step was to assemble a general process flow schematic or more detailed process flow diagrams (PFDs). (See Appendix H for the associated PFDs for this design). From this, detailed mass and energy balance calculations were performed around the process. For this design, Aspen Plus software was used. Data from this model was then used to properly size all process equipment and fully develop an estimate of capital and operating costs. These costs could have potentially been used in several types of economic analysis. For this design however, a discounted cash flow rate of return (DCFROR) analysis was used to determine the ethanol minimum plant gate price necessary to meet an nth plant hurdle rate (IRR) of 10%.

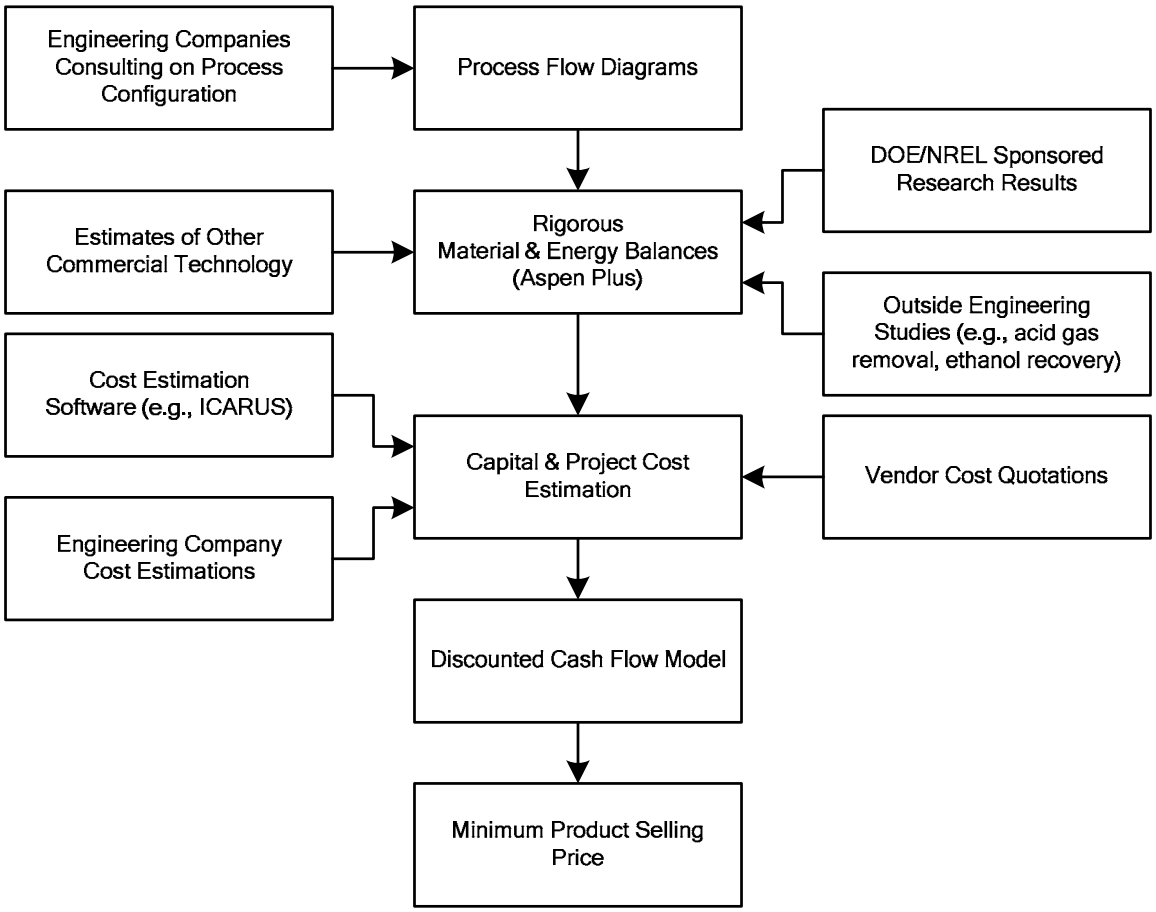

Figure 3. Approach to process analysis

This TC conversion process was developed based upon NREL experience performing conceptual designs for biomass conversion to ethanol via biochemical means [3], biopower applications, and biomass gasification for hydrogen production.[9] Specific information for potential sub-processes were obtained as a result of a subcontract with Nexant Inc. [21, 22, 23, 24]

Aspen Plus version 2004.1 was used to determine the mass and energy balances for the process. The operations were separated into seven major HIERARCHY areas:

- Feed Handling and Drying (Area 100)
- Gasification (Area 200)
- Cleanup and Conditioning (Area 300)
- Alcohol Synthesis (Area 400)
- Alcohol Separation (Area 500)
- Steam Cycle (Area 600)
- Cooling Water (Area 700)

Overall, the Aspen simulation consists of about 300 operation blocks (such as reactors, flash separators, etc.), 780 streams (mass, heat, and work), and 65 control blocks (design specs and calculator blocks). Many of the gaseous and liquid components were described as distinct molecular species using Aspen's own component properties database. The raw biomass feedstock, ash, and char components were modeled as non-conventional components. There was more detail and rigor in some blocks (e.g., distillation columns) than others (e.g., conversion extent in the alcohol synthesis reactor). Because this design processes three different phases of matter (solid phase, gas phase, and liquid phase), no single thermodynamics package was sufficient. Instead, four thermodynamics packages were used within the Aspen simulation to give more appropriate behavior. The "RKS-BM" option was used throughout much of the process for high temperature, high pressure phase behavior. The non-random two-liquid "NRTL" option with ideal gas properties was used for alcohol separation calculations. The 1987 Steam Table properties were used for the steam cycle calculations. Finally, the ELECNRTL package was used to model the electrolyte species potentially present within the quench water system.

The process economics are based on the assumption that this is the "nth" plant, meaning that several plants using this same technology will have already been built and are operating. This means that additional costs for risk financing, longer start-ups, and other costs associated with first-of-a-kind plants are not included.

The capital costs were developed from a variety of sources. For some sub-processes that are well known technology and can be purchased as modular packages (i.e. amine treatment, acid gas removal), an overall cost for the package unit was used. Many of the common equipment items (tanks, pumps, simple heat exchangers) were costed using the Aspen Icarus Questimate costing software. Other more specific unit operations (gasifier, molecular sieve, etc) used cost estimates from other studies and/or from vendor quotes. As documented in the hydrogen design report [9], the installed capital costs were developed using general plant-wide factors. The installation costs incorporated cost contributions for not only the actual installation of the purchased equipment but also instrumentation and controls, piping, electrical systems, buildings, yard improvements, etc. These are also described in more detail in Section 3.

The purchased component equipment costs reflect the base case for equipment size and cost year. The sizes needed in the process may actually be different than what was specifically designed. Instead of re-costing in detail, an exponential scaling expression was used to adjust the bare equipment costs:

$$\text{New Cost} = \left(\text{Base Cost}\right)\left(\frac{\text{New Size}}{\text{Base Size}}\right)^{n}$$

where n is a characteristic scaling exponent (typically in the range of 0.6 to 0.7). The sizing parameters are based upon some characteristic of the equipment related to production capacity, such as inlet flow or heat duty in a heat exchanger (appropriate if the log-mean temperature difference is known not to change greatly). Generally these related characteristics are easier to calculate and give nearly the same result as resizing the equipment for each scenario. The scaling exponent n can be inferred from vendor quotes (if multiple quotes are given for different sizes), multiple estimates from Questimate at different sizes, or a standard reference (such as Garrett, [25] Peters and Timmerhaus, [26] or Perry et al. [27]).

Since a variety of sources were used, the bare equipment costs were derived based upon different cost years. Therefore, all capital costs were adjusted with the *Chemical Engineering* (CE) magazine's Plant Cost Index [28] to a common basis year of 2005:

$$\text{New Cost} = \left(\text{Base Cost}\right)\left(\frac{\text{Cost Index in New Year}}{\text{Cost Index in Base Year}}\right).$$

The CE indices used in this study are listed in Table 1 and depicted in Figure 4. Notice that the indices were very nearly the same for 2000 to 2002 (essentially zero inflation) but take a very sharp increase after 2003 (primarily due a run-up in worldwide steel prices).

Table 1. *Chemical Engineering* Magazine's Plant Cost Indices

Year	Index	Year	Index
1990	357.6	1998	389.5
1991	361.3	1999	390.6
1992	358.2	2000	394.1
1993	359.2	2001	394.3
1994	368.1	2002	395.6
1995	381.1	2003	402.0
1996	381.7	2004	444.2
1997	386.5	2005	468.2

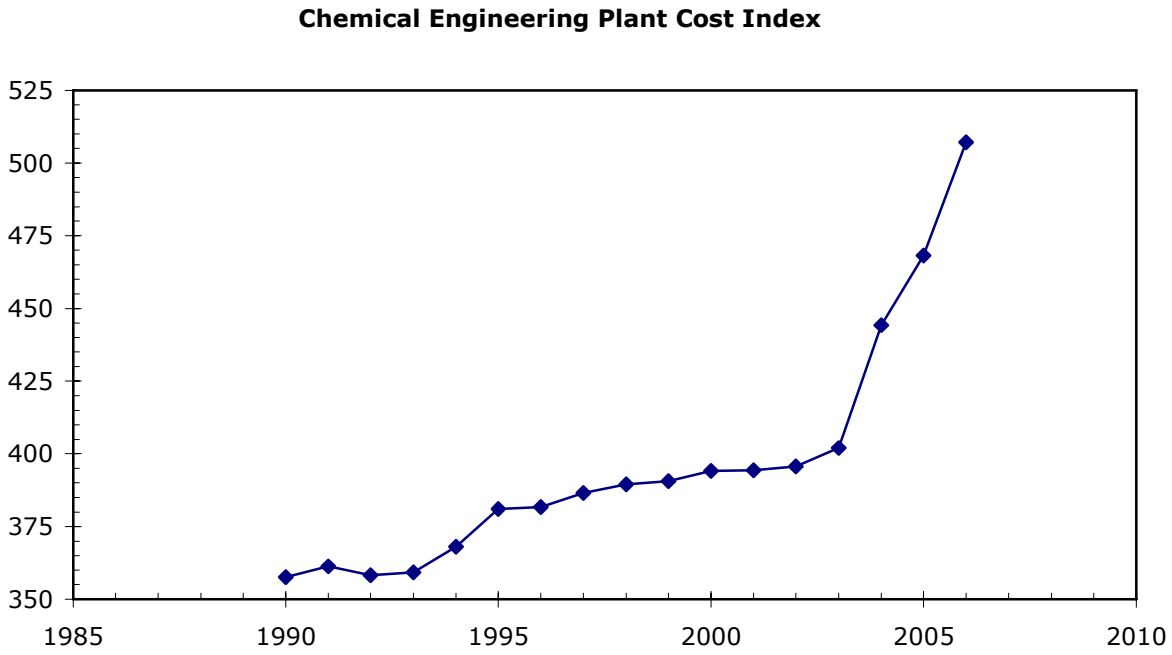

Figure 4. *Chemical Engineering* Magazine's plant cost indices

Once the scaled, installed equipment costs were determined, we applied overhead and contingency factors to determine a total plant investment cost. That cost, along with the plant operating expenses (generally developed from the ASPEN model's mass and energy balance results) was used in a discounted cash flow analysis to determine the ethanol plant gate price, using a specific discount rate. For the analysis done here, the ethanol minimum plant gate price is the primary value used to compare alternate designs.

2.2. Process Design Overview

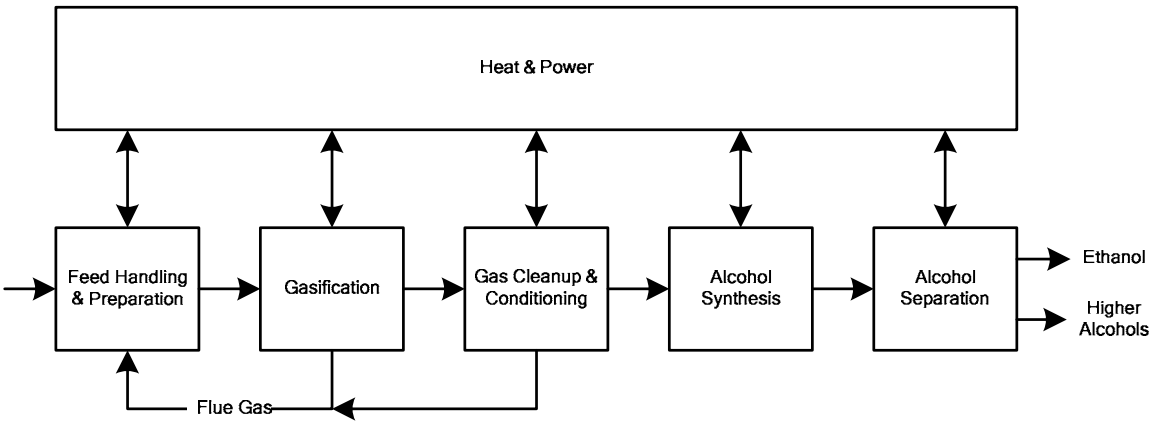

Figure 5. Block flow diagram

A simple block flow diagram of the current design is depicted in Figure 5. The detailed process flow diagrams (PFDs) are in Appendix H. The process has the following steps:

- *Feed Handling & Preparation.* The biomass feedstock is dried from the as-received moisture to that required for proper feeding into the gasifier using flue gases from the char combustor and tar reformer catalyst regenerator.

- *Gasification.* Indirect gasification is considered in this assessment. Heat for the endothermic gasification reactions is supplied by circulating hot synthetic olivine[a] "sand" between the gasifier and the char combustor. Conveyors and hoppers are used to feed the biomass to the low-pressure indirectly-heated entrained flow gasifier. Steam is injected into the gasifier to aid in stabilizing the entrained flow of biomass and sand through the gasifier. The biomass chemically converts to a mixture of syngas components (CO, H_2, CO_2, CH_4, etc.), tars, and a solid "char" that is mainly the fixed carbon residual from the biomass plus carbon (coke) deposited on the sand. Cyclones at the exit of the gasifier separate the char and sand from the syngas. These solids flow by gravity from the cyclones into the char combustor. Air is introduced to the bottom of the reactor and serves as a carrier gas for the fluidized bed plus the oxidant for burning the char and coke. The heat of combustion heats the sand to over 1800°F. The hot sand and residual ash from the char is carried out of the combustor by the combustion gases and separated from the hot gases using another pair of cyclones. The first cyclone is designed to capture mostly sand while the smaller ash particles remain entrained in the gas exiting the

[a] Calcined magnesium silicate, primarily Enstatite ($MgSiO_3$), Forsterite (Mg_2SiO_3), and Hematite (Fe_2O_3). This is used as a sand for various applications. A small amount of magnesium oxide (MgO) is added to the fresh olivine to prevent the formation of glass-like bed agglomerations that would result from biomass potassium interacting with the silicate compounds.

cyclone. The second cyclone is designed to capture the ash and any sand passing through the first cyclone. The hot sand captured by the first cyclone flows by gravity back into the gasifier to provide the heat for the gasification reaction. Ash and sand particles captured in the second cyclone are cooled, moistened to minimize dust and sent to a land fill for disposal.

- *Gas Cleanup & Conditioning.* This consists of multiple operations: reforming of tars and other hydrocarbons to CO and H_2; syngas cooling/quench; and acid gas (CO_2 and H_2S) removal with subsequent reduction of H_2S to sulfur. Tar reforming is envisioned to occur in an isothermal fluidized bed reactor; de-activated reforming catalyst is separated from the effluent syngas and regenerated on-line. The hot syngas is cooled through heat exchange with the steam cycle and additional cooling via water scrubbing. The scrubber also removes impurities such as particulates and ammonia along with any residual tars. The excess scrubber water is sent off-site to a waste-water treatment facility. The cooled syngas enters an amine unit to remove the CO_2 and H_2S. The H_2S is reduced to elemental sulfur and stockpiled for disposal. The CO_2 is vented to the atmosphere in this design.

- *Alcohol Synthesis.* The cleaned and conditioned syngas is converted to alcohols in a fixed bed reactor. The mixture of alcohol and unconverted syngas is cooled through heat exchange with the steam cycle and other process streams. The liquid alcohols are separated by condensing them away from the unconverted syngas. Though the unconverted syngas has the potential to be recycled back to the entrance of the alcohol synthesis reactor, this recycle is not done in this process design because CO_2 concentrations in the recycle loop would increase beyond acceptable limits of the catalyst. Added cost would be incurred if this CO_2 were separated. Instead the unconverted syngas is recycled to the Gas Cleanup & Conditioning section, mostly as feed to the tar reformer.

- *Alcohol Separation.* The alcohol stream from the Alcohol Synthesis section is depressurized in preparation of dehydration and separation. Another rough separation is performed in a flash separator; the evolved syngas is recycled to the Gas Cleanup & Conditioning section, mostly as feed to the tar reformer. The depressurized alcohol stream is dehydrated using vapor-phase molecular sieves. The dehydrated alcohol stream is introduced to the main alcohol separation column that splits methanol and ethanol from the higher molecular weight alcohols. The overheads are topped in a second column to remove the methanol to ASTM sales specifications. The methanol leaving in the overheads is used to flush the adsorbed water from the molecular sieves. This methanol/water mixture is recycled back to the entrance of the alcohol synthesis reactor in order to increase the yield of ethanol and higher alcohols.

- *Heat & Power.* A conventional steam cycle produces heat (as steam) for the gasifier and reformer operations and electricity for internal power requirements (with the possibility of exporting excess electricity as a co-product). The steam cycle is integrated with the biomass conversion process. Pre-heaters, steam generators, and super-heaters are integrated within the process design to create the steam. The steam will run through turbines to drive compressors, generate electricity or be withdrawn at various pressure

levels for injection into the process. The condensate will be sent back to the steam cycle, de-gassed, and combined with make-up water.

A cooling water system is also included in the Aspen Plus model to determine the requirements of each cooling water heat exchanger within the biomass conversion process as well as the requirements of the cooling tower.

Previous analyses of gasification processes have shown the importance of properly utilizing the heat from the high temperature streams. A pinch analysis was performed to analyze the energy network of this ethanol production process. The pinch concept offers a systematic approach to optimize the energy integration of the process. Details of the pinch analysis will be discussed in Section 3.10.

2.3. Feedstock and Plant Size

Based upon expected availability per the Billion Ton Vision [6] study, the forest resources were chosen for the primary feedstock. The Billion Ton Vision study addressed short and long term availability issues for biomass feedstocks without giving specific time frames. The amounts are depicted in Figure 6. The upper sets of numbers (labeled "High Yield Growth With Energy Crops" and "High Yield Growth Without Energy Crops") are projections of availability that will depend upon changes to agricultural practices and the creation of a new energy crop industry. In the target year of 2012 it is most probable that the amounts labeled "Existing & Unexploited Resources" will be the only ones that can be counted on to supply a thermochemical processing facility. Notice that the expected availability of forest resources is nearly the same as that of agricultural resources. Prior studies for biochemical processing have largely focused on using agricultural resources. It makes sense to base thermochemical processing on the forest resources. TC processing could fill an important need to provide a cost-effective technology to process this major portion of the expected biomass feedstock.

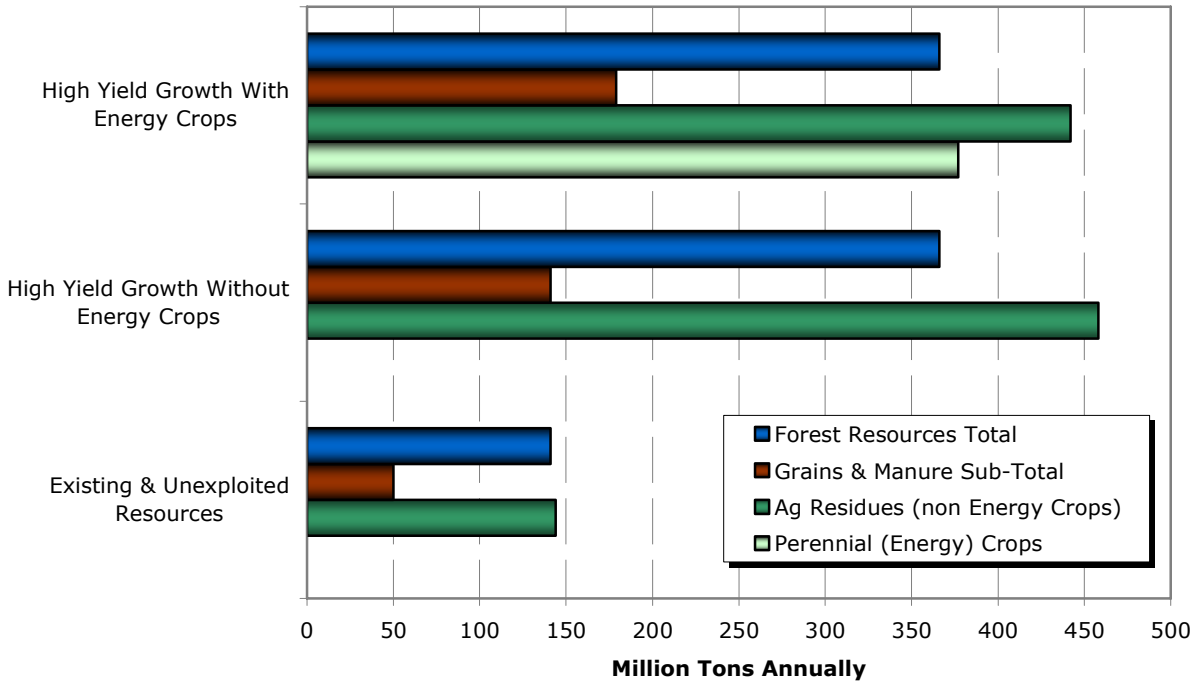

Figure 6. Expected availability of biomass

Past analyses have used hybrid poplar wood chips delivered at 50 wt% moisture to model forest resources [9]; the same will be done here. The ultimate analysis for the feed used in this study is given in Table 2. Performance and cost effects due to composition and moisture content were examined as part of the sensitivity analysis and alternate scenarios.

Table 2. Ultimate Analysis of Hybrid Poplar Feed

Component (wt%, dry basis29)	
Carbon	50.88
Hydrogen	6.04
Nitrogen	0.17
Sulfur	0.09
Oxygen	41.90
Ash	0.92
Heating value[c] (Btu/lb):	8,671 HHV[d] 8,060 LHV[e]

The design plant size for this study was chosen to match that of the Aden et al. biochemical process [3], 2,000 dry tonne/day (2,205 dry ton/day). With an expected 8,406 operating hours per year (96% operating factor) the annual feedstock requirement is 700,000 dry tonne/yr (772,000 dry ton/yr). As can be seen in Figure 6 this is a small portion of the 140 million dry ton/yr of

[c] Calculated using the Aspen Plus Boie correlation.
[d] Higher Heating Value
[e] Lower Heating Value

forest resources potentially available. Cost effects due to plant size were examined as part of the sensitivity analysis.

The delivered feedstock cost was chosen to match recent analyses done at Idaho National Laboratory (INL) [30] to target $35 per dry ton by 2012. Cost effects due to feedstock cost were also examined as part of the sensitivity analysis.

3. Process Design

3.1. Process Design Basis

The process design developed for this study is based upon the current operation and R&D performance goals for the catalytic tar destruction and heteroatom removal work at NREL and alcohol synthesis work at NREL and PNNL. This target design shows the effect of meeting these specific research and development (R&D) goals.

The process broadly consists of the following sections:

- Feed handling and drying
- Gasification
- Gas clean up and conditioning
- Alcohol synthesis
- Alcohol separation
- Integrated steam system and power generation cycle
- Cooling water and other utilities

3.2. Feed Handling and Drying – Area 100

This section of the process accommodates the delivery of biomass feedstock, short term storage on-site, and the preparation of the feedstock for processing in the gasifier. The design is based upon a woody feedstock. It is expected that a feed handling area for agricultural residues or energy crops would be very similar.

The feed handling and drying section are shown in PFD-P800-A101 and PFD-P800-A102. Wood chips are delivered to the plant primarily via trucks. However, it is envisioned that there could be some train transport. Assuming that each truck capacity is about 25 tons [31], this means that if the wood, at a moisture content of 50%, was delivered to the plant via truck transport only, then 176 truck deliveries per day would be required. As the trucks enter the plant they are weighed (M-101) and the wood chips are dumped into a storage pile. From the storage pile, the wood chips are conveyed (C-102) through a magnetic separator (S-101) and screened (S-102). Particles larger than 2 inches are sent through a hammer mill (T-102/M-102) for further size reduction. Front end loaders transfer the wood chips to the dryer feed bins (T-103).

Drying is accomplished by direct contact of the biomass feed with hot flue gas. Because of the large plant size there are two identical, parallel feed handling and drying trains. The wet wood

chips enter each rotary biomass dryer (M-104) through a dryer feed screw conveyor (C-104). The wood is dried to a moisture content of 5 wt% with flue gas from the char combustor (R-202) and tar reformer's fuel combustor (R-301). The exhaust gas exiting the dryer is sent through a cyclone (S-103) and baghouse filter (S-104) to remove particulates prior to being emitted to the atmosphere. The stack temperature of the flue gas is set at 62° above the dew point of the gas, 235°F (113°C). The stack temperature is controlled by cooling the hot flue gas from the char combustor and the tar reformer with two steam boilers (H-286B and H-311B) prior to entering the dryer. This generated steam is added to the common steam drum (T-604) (see section on Steam System and Power Generation – Area 600). The dried biomass is then conveyed to the gasifier train (T-104/C-105).

Equipment costs were derived from the biochemical design report that utilized poplar as a feedstock. [5]

3.3. Gasification – Area 200

This section of the process converts a mixture of dry feedstock and steam to syngas and char. Heat is provided in an indirect manner — by circulating olivine that is heated by the combustion of the char downstream of the gasifier. The steam primarily acts as a fluidizing medium in the gasifier and also participates in certain reactions when high gasifier temperatures are reached.

From the feed handling and drying section, the dried wood enters the gasifier section as shown in PFD-P800-A201. Because of the plant size, it is assumed that there are two parallel gasifier trains. The gasifier (R-201) used in this analysis is a low-pressure indirectly-heated circulating fluidized bed (CFB) gasifier. The gasifier was modeled using correlations based on run data from the Battelle Columbus Laboratory (BCL) 9 tonne/day test facility (see Appendix I).

Heat for the endothermic gasification reactions is supplied by circulating a hot medium between the gasifier vessel and the char combustor (R-202). In this case the medium is synthetic olivine, a calcined magnesium silicate, primarily Enstatite ($MgSiO_3$), Forsterite (Mg_2SiO_3), and Hematite (Fe_2O_3), used as a heat transfer solid for various applications. A small amount of MgO must be added to the fresh olivine to avoid the formation of glass-like bed agglomerations that would result from the biomass potassium interacting with the silicate compounds. The MgO titrates the potassium in the feed ash. Without MgO addition, the potassium will form glass, K_2SiO_4, with the silica in the system. K_2SiO_4 has a low melting point (~930°F, 500°C) and its formation will cause the bed media to become sticky, agglomerate, and eventually defluidize. Adding MgO makes the potassium form a high melting (~2,370°F, 1,300°C) ternary eutectic with the silica, thus sequestering it. Potassium carry-over in the gasifier/combustor cyclones is also significantly reduced. The ash content of the feed is assumed to contain 0.2 wt% potassium. The MgO flow rate is set at two times the molar flow rate of potassium.

The gasifier fluidization medium is steam that is supplied from the steam cycle (Steam System and Power Generation – Area 600). The steam-to-feed ratio is 0.4 lb of steam/lb of bone dry biomass. The gasifier pressure is 23 psia. The olivine circulating flow rate is 27 lb of olivine/lb of bone dry wood. Fresh olivine is added at a rate of 0.01% of the circulating rate to account for losses. The char combustor is operated with 20% excess air.

Both the gasifier and the char combustor temperatures are allowed to "float" and are dictated from the energy balances around the gasifier and combustor. In general, the more char created, the higher the char combustor temperature; but the higher the char combustor temperature, the higher the resulting gasifier temperature, resulting in less char. In this way the gasifier and char combustor temperatures tend to find an equilibrium position. For the design case the resulting gasifier temperature is 1,633°F (889°C) and the char combustor is 1,823°F (995°C). The composition of the outlet gas from the gasifier is shown in Table 3.

Particulate removal from the raw syngas exiting the gasifier is performed using two-stage cyclone separators. Nearly all of the olivine and char (99.9% of both) is separated in the primary gasifier cyclone (S-201) and gravity-fed to the char combustor. A secondary cyclone (S-202) removes 90% of any residual fines. The char that is formed in the gasifier is burned in the combustor to reheat the olivine. The primary combustor cyclone (S-203) separates the olivine (99.9%) from the combustion gases and the olivine is gravity-fed back to the gasifier. Ash and any sand particles that are carried over in the flue gas exiting the combustor are removed in the secondary combustor cyclone (99.9% separation in S-204) followed by an electrostatic precipitator (S-205) which removes the remaining residual amount of solid particles. The sand and ash mixture from the secondary flue gas cyclone and precipitator are land filled but prior to this the solids are cooled and water is added to the sand/ash stream for conditioning to prevent the mixture from being too dusty to handle. First the ash and sand mixture is cooled to 300°F (149°C) using the water cooled screw conveyor (M-201) then water is added directly to the mixture until the mixture water content is 10 wt%.

Table 3. Gasifier Operating Parameters, Gas Compositions, and Efficiencies

Gasifier Variable	Value	
Temperature	1,633ºF (890ºC)	
Pressure	23 psia (1.6 bar)	
Gasifier outlet gas composition	mol% (wet)	mol% (dry)
H_2	15.0	25.1
CO_2	7.4	12.4
CO	25.1	41.9
H_2O	40.2	--
CH_4	9.0	15.1
C_2H_2	0.3	0.4
C_2H_4	2.5	4.1
C_2H_6	0.1	0.2
C_6H_6	0.1	0.1
tar ($C_{10}H_8$)	0.1	0.2
NH_3	0.2	0.3
H_2S	0.04	0.07
H_2:CO molar ratio	0.60	
Gasifier Efficiency	76.6% HHV basis 76.1% LHV basis	

Capital costs for the equipment in this section are described in detail in Section 3 of this report. The operating costs for this section are listed in Appendix E and consist of makeup MgO and olivine, and sand/ash removal.

3.4. Gas Cleanup and Conditioning – Area 300

This section of the process cleans up and conditions the syngas so that the gas can be synthesized into alcohol. The type and the extent of cleanup are dictated by the requirements of the synthesis catalyst:

- The tars in the syngas are reformed to additional CO and H_2.
- Particulates are removed by quenching.
- Acid gases (CO_2 and H_2S) are removed.
- The syngas is compressed.

The gas from the secondary gasifier cyclone is sent to the catalytic tar reformer (R-303). In this bubbling fluidized bed reactor the hydrocarbons are converted to CO and H_2 while NH_3 is converted to N_2 and H_2. In the Aspen simulation, the conversion of each compound is set to match targets that are believed to be attainable through near-term research efforts. Table 4 gives the current experimental conversions (for deactivated catalyst) that have been achieved at NREL [32] and the conversions used in the simulation corresponding to the 2012 research targets.

Table 4. Current and Target Design Performance of Tar Reformer

Compound	Experimental Conversion to CO & H_2	Target Conversion to CO & H_2
Methane (CH_4)	20%	80%
Ethane (C_2H_6)	90%	99%
Ethylene (C_2H_4)	50%	90%
Tars (C_{10+})	95%	99.9%
Benzene (C_6H_6)	70%	99%
Ammonia (NH_3)[f]	70%	90%

In the Aspen simulation the tar reformer operates isothermally at 1,633ºF. An implicit assumption in this mode of operation is that the energy needed for the endothermic reforming reactions can be transferred into the catalyst bed. Although conceptual reactor designs are readily created for providing the heat of reaction from the fuel combustion area directly into the reformer catalyst bed, in practice this may be a difficult and prohibitively expensive design option requiring internal heat transfer tubes operating at high temperatures. An alternate approach, not used in this study, would be to preheat the process gas upstream of the reformer above the current reformer exit temperature, and operate the reformer adiabatically with a resulting temperature drop across the bed and a lower exit gas temperature. In this configuration, the required inlet and exit gas temperatures would be set by the extent of conversion, the kinetics of the reforming reactions, and the amount of catalyst in the reactor.

The composition of the gas from the tar reformer can be seen in Table 5.

[f] Converts to N_2 and H_2.

Table 5. Target Design Tar Reformer Conditions and Outlet Gas Composition

Tar Reformer Variable	Value	
Tar reformer inlet temperature	1,633ºF (890ºC)	
Tar reformer outlet temperature	1,633ºF (890ºC)	
Tar reformer outlet gas composition	mol% (wet)	mol% (dry)
H_2	37.4	43.0
CO_2	9.9	11.4
CO	37.4	43.0
H_2O	13.0	---
CH_4	1.2	1.4
C_2H_2	0.01	0.01
C_2H_4	0.11	0.13
C_2H_6	10.8 ppmv	12.4 ppmv
C_6H_6	2.7 ppmv	3.1 ppmv
tar ($C_{10}H_8$)	0.5 ppmv	0.6 ppmv
NH_3	0.01	0.01
H_2S	0.02	0.02
N_2	0.72	0.83
H_2:CO molar ratio	1.00	

Prior to the quench step, the hot syngas is cooled to 300°F (149°C) with heat exchangers (H-301A-C) that are integrated in the steam cycle (see section Steam System and Power Generation – Area 600). After this direct cooling of the syngas, additional cooling is carried out via water scrubbing (M-302 and M-301), shown in PFD-P800-A302. The scrubber also removes impurities such as particulates, residual ammonia, and any residual tars. The scrubbing system consists of a venturi scrubber (M-302) and quench chamber (M-301). The scrubbing system quench water is a closed recirculation loop with heat rejected to the cooling tower and a continuous blow down rate of approximately 2.3 gallons per minute (gpm) that is sent to a waste water treatment facility. The quench water flow rate is determined by adjusting its circulation rate until its exit temperature from the quench water recirculation cooler (H-301) is 110°F (43°C). Any solids that settle out in T-301 are sent off-site for treatment as well. For modeling purposes, the water content of the sludge stream was set at 50 wt%.

The quench step cools the syngas to a temperature of 140°F (60°C). The syngas is then compressed using a five-stage centrifugal compressor with interstage cooling as shown in PFD-P800-A303. The compressor was modeled such that each section has a polytropic efficiency of 78% and intercooler outlet temperatures of 140°F (60°C). The interstage coolers are forced air heat exchangers.

Depending on the specific catalysts being used downstream of the tar reformer, varying concentrations of acid gas compounds can be tolerated in the syngas. For example, sulfur concentrations as H_2S are required to be below 0.1 ppm for copper based synthesis catalysts. This design is based upon sulfided molybdenum catalysts which actually require up to 100 ppm of H_2S in the syngas to maintain catalyst activity. Because the syngas exiting the gasifier contains almost 400 ppmv of H_2S, some level of sulfur removal will be required by any of the synthesis catalysts currently of interest.

Carbon dioxide is the other acid gas that needs to be removed in the syngas conditioning process. Similar to the sulfur compounds, the acceptable level of CO_2 depends on the specific catalyst

being used in the synthesis reactor to make alcohols. Some synthesis catalysts require low levels of CO_2 while others, such as the sulfided molybdenum catalysts can tolerate relatively high CO_2 levels compared to the sulfur species. CO_2 is a major component of the gasification product, so significant amounts of CO_2 may need to be removed upstream of the synthesis reactor.

Since the catalyst selected for this study is a sulfided catalyst that is tolerant of sulfur up to 100 ppmv and CO_2 up to 7 mol% (see Appendix J for more detail), a design that can provide for the removal of both sulfur and carbon dioxide was chosen. An amine system capable of selectively removing CO_2 and H_2S from the main process syngas stream is used. The amine assumed for this study is monoethanol amine (MEA), based on the recommendation by Nexant [33].

The acid gas scrubber was simulated using a simplified model of SEP blocks and specifying the amount of CO_2 and H_2S needing to be removed to meet design specifications of 50 ppmv H_2S and 5 mol% CO_2 at the synthesis reactor inlet, including any recycle streams to that unit operation. The amine system heating and cooling duties were calculated using information taken from section 21 of the GPSA Data Handbook [34]. This method gave a heat duty of 2660 Btu per pound of CO_2 removed, with a similar magnitude cooling duty provided by forced-air cooling fans. Power requirements for pumping and fans were also calculated using GPSA recommended values. The acid gas scrubber operating values for the base case are given below.

Acid Gas Removal Parameter	Value
Amine Used	Monoethanol amine (MEA)
Amine Concentration	35 wt%
Amine Circ. Rate	1,945 gpm
Amine Temp. @ Absorber	110°F
Absorber Pressure	450 psia
Stripper Condenser Temperature	212°F
Stripper Reboiler Temperature	237°F
Stripper Pressure	65 psia
Stripper Reboiler Duty	140.1 MMBTU/hr
Stripper Condenser Duty	93.4 MMBTU/hr
Amine Cooler Duty	46.7 MMBTU/hr
Heat Duty per Pound CO_2 removed	2,660 Btu/lb

If a highly CO_2-tolerant alcohol synthesis catalyst is used, it may become possible to use other syngas conditioning processes or methods to selectively remove H_2S, with less energy and possibly at a significantly lower capital cost.

The acid gases removed in the amine scrubber are then stripped to regenerate the sorbent and sent through a sulfur removal operation using a liquid phase oxidation process as shown in PFD-P800-A305. The combined Amine/ LO-CAT process will remove the sulfur and CO_2 to the levels desired for the selected molysulfide catalyst [35]. Although, there are several liquid-phase oxidation processes for H_2S removal and conversion available today, the LO-CAT process was selected because of its progress in minimizing catalyst degradation and its environmentally-benign catalyst. LO-CAT is an iron chelate-based process that consists of a venturi precontactor (M-303), liquid-filled absorber (M-304), air-blown oxidizer (R-301), air blower (K-302), solution circulation pump (P-303) and solution cooler (H-305). Elemental sulfur is produced in

the oxidizer and, since there is such a small amount (1.3 ton/day), it is stockpiled either for eventual disposal or sold as an unconditioned product. The LO-CAT process was modeled to remove the H_2S to a concentration of 10 ppmv in the CO_2 vent effluent from the amine scrubber. The air flow rate for re-oxidizing the LO-CAT solution was included in the simulation and calculated based on the requirement of 2 moles of O_2 per mole of H_2S. Prior to entering the LO-CAT system the gas stream is superheated to 10°F (5.6°C) above its dew point in preheater (H-304), which in this process is equivalent to 120˚F. This degree of superheating is required for the LO-CAT system. The CO_2 from the LO-CAT unit is vented to the atmosphere.

The capital costs for the equipment in this section are described in further detail in the Appendices. The operating costs consist of makeup reforming catalyst, LO-CAT and amine chemical makeup, as well as reforming catalyst disposal cost and WWT. These are described in further detail in Section 3.

3.5. Alcohol Synthesis – Area 400

The alcohol synthesis reactor system is the heart of the entire process. Entering this process area, the syngas has been reformed, quenched, compressed and treated to have acid gas concentrations (H_2S, CO_2) reduced. After that, it is further compressed and heated to the synthesis reaction conditions of 1,000 psia and 570°F (300°C). The syngas is converted to the alcohol mixture across a fixed bed catalyst. The product gas is subsequently cooled, allowing the alcohols to condense and separate from the unconverted syngas. The liquid alcohols are then sent to alcohol separation and purification (Area 500). The residual gas stream is recycled back to the tar reformer with a small purge to fuel combustion (5%).

Research on alcohol synthesis catalysts has waxed and waned over many decades for a variety of reasons. In order to review the status of mixed alcohol technology and how it has developed over the past 20 years, two activities were initiated. First, a literature search was conducted. This search and its findings are described in more detail in Appendix J, along with a discussion on specific terminology, such as “yield”, “selectivity”, and “conversion”. These terms will be used throughout the remainder of this document. Second, an engineering consulting company (Nexant) was hired to document the current state of technology with regards to mixed alcohols production and higher alcohol synthesis. Their results are published in an NREL subcontract [36] report.

Based on the results of this background technology evaluation, a modified Fischer-Tropsch catalyst was used for this process design, specifically a molybdenum-disulfide-based (MoS_2) catalyst. The former Dow/UCC catalyst was chosen as the basis because of its relatively high ethanol selectivity and because its product slate is a mixture of linear alcohols (as opposed to the branched alcohols that result from modified methanol catalysts). This particular catalyst uses high surface area MoS_2 promoted with alkali metal salts (e.g. potassium carbonate) and cobalt (CoS). These promoters shift the product slate from hydrocarbons to alcohols, and can either be supported on alumina or activated carbon, or be used unsupported.

Table 6 lists several process and syngas conditioning requirements for this synthesis reaction. These include both experimentally verified conditions typical of those found in literature, as well as targeted conditions from the OBP-funded research plan used in the model.

Table 6. Process Conditions for Mixed Alcohols Synthesis

Parameter	**"State of Technology" Conditions** [41]	**Target Conditions Used in Process Design & Aspen Model**
Temperature (°C)	~ 300	300
Pressure (psia)	1500 - 2000	1000
H_2/CO ratio	1.0 – 1.2	1.0
CO_2 concentration (mol%)	0% - 7%	5.0%
Sulfur concentration (ppmv)	50 - 100	50

Though the synthesis reactor is modeled as operating isothermally, it is recognized that maintaining a constant temperature in a fixed bed reactor system would be difficult, especially since these reactions are highly exothermic. Temperature has a significant impact on the alcohol selectivity and product distribution. High pressures are typically required to ensure the production of alcohols. MoS_2 catalysts are efficient Fischer-Tropsch (FT) catalysts at ambient or low pressures. However, significantly raising the pressure (in addition to promoting with alkali) helps to shift the pathways from hydrocarbon production towards alcohol production. However, compression requirements for achieving these pressures can be quite substantial. Thus, targeting a catalyst that achieves optimal performance at lower pressures can potentially provide significant cost savings.

The CO_2 concentration requirements for the syngas are less well-known. Herman [37] states that in the first Dow patent application, the presence of larger amounts of CO_2 in the synthesis gas retarded the catalyst activity. Further study showed that increasing the CO_2 concentration to 30 vol% decreased the CO conversion but did not significantly alter the alcohol:hydrocarbon ratio of the product. With CO_2 concentrations up to 6.7 vol%, the extent of CO conversion is not affected; however, higher chain alcohol yield relative to methanol does tend to decrease. This is why CO_2 concentrations were reduced to 5 mol% in the model using the amine system as part of syngas conditioning. The effect of CO_2 concentration on alcohol production will be studied in future laboratory experiments.

One of the benefits of this catalyst is its sulfur tolerance. It must be continuously sulfided to maintain its activity; thus an inlet gas concentration of 50 ppmv H_2S is maintained. Concentrations above 100 ppmv inhibit the reaction rate and higher alcohol selectivity.

The overall stoichiometric reaction for alcohol synthesis can be summarized as:

$$n\ CO + 2n\ H_2 \rightarrow C_nH_{2n+1}OH + (n\text{-}1)\ H_2O$$

Stoichiometry suggests an optimum H_2:CO ratio of 2.0. However this catalyst maintains significant water-gas shift activity and will generate its own H_2 from CO and H_2O:

$$CO + H_2O \rightarrow H_2 + CO_2.$$

This shifts the optimal ratio closer to 1.0 and also shifts the primary byproduct from water to CO_2. Experiments [38] have been typically conducted using ratios in the range of 1.0 to 1.2.

The compressor (K-410) in this area is a 3-stage steam-driven compressor that takes the syngas from 415 psia to 1000 psia, requiring 9,420 HP (assuming a polytropic efficiency of 78%). The outlet syngas from the compressor is then mixed with recycled methanol from Alcohol Purification (Area 500), heated to 570°F (300°C), and sent to the reactor. The capital cost for the compressor was developed using Questimate.

The mixed alcohol synthesis reactor is a fixed-bed reactor system that contains the MoS_2 catalyst. Because this is a net exothermic reaction system, water is cross exchanged with the reactor to produce steam for the process while helping to maintain a constant reactor temperature. Questimate was used to develop the reactor capital cost.

The purchase price of the catalyst itself was estimated at $5.25/lb based on conversations NREL researchers had with CRITERION [39], a petroleum/hydrocarbon catalyst provider. This represents a generalized cost of Molybdenum-based catalyst at around $5/lb being sulfided for an additional $0.25/lb. In addition, NREL was able to speak with Dow catalyst experts [40] who said that in today's market the raw material costs for producing such a catalyst system would run about $20/lb. Adding more cost for the catalyst preparation would bring that cost between $22-40/lb. However, these costs could go down as demand goes up, and quite substantially if it gets to large enough scale.

In reality, each company developing a process like this will have their own proprietary catalyst and associated formulation. The costs for these catalysts are difficult to predict at the present time since so few providers of mixed alcohols catalyst currently exist (and will likely be negotiated). Nexant also provided information on general catalyst metals price ranges in their report. They reported Molybdenum ranging from $2 – 40/lb.

The lifetime of the catalyst was assumed to be 5 years. While existing mixed alcohols catalysts have not been tested for this long, they have operated for over 8,000 hours (roughly 1 year of continuous operating time) with little or no loss in performance.

The reactor was modeled as a simple conversion-specified reactor using a series of alcohol and hydrocarbon production reactions as shown in Table 7. The propane, butane, and pentane+ reactions are set to zero because the catalyst will likely not favor these reactions. The specific conversions of each of the other reactions were set in order to reach catalyst performance targets, see Table 9. Those targets are shown in Table 8 along with values for those parameters typically found in literature.

Table 7. System of Reactions for Mixed Alcohol Synthesis

Water-Gas Shift	$CO + H_2O \leftrightarrow H_2 + CO_2$
Methanol	$CO + 2H_2 \rightarrow CH_3OH$
Methane	$CH_3OH + H_2 \rightarrow CH_4 + H_2O$
Ethanol	$CO + 2H_2 + CH_3OH \rightarrow C_2H_5OH + H_2O$
Ethane	$C_2H_5OH + H_2 \rightarrow C_2H_6 + H_2O$
Propanol	$CO + 2H_2 + C_2H_5OH \rightarrow C_3H_7OH + H_2O$
Propane	$C_3H_7OH + H_2 \rightarrow C_3H_8 + H_2O$
n-Butanol	$CO + 2H_2 + C_3H_7OH \rightarrow C_4H_9OH + H_2O$
Butane	$C_4H_9OH + H_2 \rightarrow C_4H_{10} + H_2O$
Pentanol+	$CO + 2H_2 + C_4H_9OH \rightarrow C_5H_{11}OH + H_2O$
Pentane+	$C_5H_{11}OH + H_2 \rightarrow C_5H_{12} + H_2O$

Table 8. Mixed Alcohol Reaction Performance Results

Result	**"State of Technology" Value Ranges** [37, 41]	**Target Results Used in Process Design & Aspen Model**
Total CO Conversion (per-pass)	10% - 40%	60%
Total Alcohol Selectivity (CO_2-free basis)	70% - 80%	90%
Gas Hourly Space Velocity (hr^{-1})	1600 – 12,000	4000
Catalyst Alcohol Productivity (g/kg-catalyst/hr)[g]	150 – 350	600

The individual target values are less important than the net result of the entire collection. For example, a catalyst system can have a high CO conversion well above 40%, but if most of that CO is converted to methane or CO_2, then the alcohol selectivities would be very low and the entire process economics would suffer. Likewise, if the catalyst had a high CO conversion and selectivity, but had very low productivity, a much larger reactor would have to be built to accommodate the volume of catalyst required. The set of targets shown above are improvements over current literature values, but were chosen as targets believed to be achievable through catalyst research and development. There is precedent for these results from other catalyst systems. For example, FT catalysts are currently capable of CO conversions above 70% [42]. Also commercial methanol catalysts have productivities over 1000 g/kg-catalyst/hr [37].

The reaction conversions were also set to achieve a certain product distribution of alcohols. The mixed alcohol products described in literature are often high in methanol, but contain a wide distribution of several different alcohols. The product distributions described by Dow and SRI are shown in Table 9 along with the relative product concentrations calculated by the model.

[g] Based on assumed catalyst density of 64 lb/ft^3, 600 g/kg-catalyst/hr = 615 g/L-catalyst/hr.

Table 9. Mixed Alcohol Product Distributions

Alcohol	**Dow** [43] (wt %)	**SRI** [44] (wt%)	**NREL Model** (wt%)*
Methanol	30-70%	30.77%	5.01%
Ethanol	34.5%	46.12%	70.66%
Propanol	7.7%	13.3%	10.07%
Butanol	1.4%	4.14%	1.25%
Pentanol +	1.5%	2.04%	0.17%
Acetates (C1 & C2)	2.5%	3.63%	
Others			10.98%
Water	2.4%		1.86%
Total	100%	100%	100%

* Prior to alcohol purification and methanol recycle

The most significant differences between the NREL model product distribution and those shown in literature are with regards to the methanol and ethanol distributions. This is primarily due to the almost complete recycle of methanol within this process. In the alcohol purification section downstream, virtually all methanol is recovered via distillation and recycled back to mix with the compressed syngas. This is done in order to increase the production of ethanol and higher alcohols. This concept has been proposed in literature, but data from testing in an integrated setting has not been seen. In literature, experiments are often conducted on closed or batch systems and do not examine the potential impacts of recycled compounds or other integration issues. However, this catalyst is known to have methanol decomposition functionality which indicates that methanol in the feed will not be detrimental to the reaction. The effects of recycled methanol will be examined experimentally as research progresses.

A kinetic model was used to guide these conversion assumptions to help predict how the catalyst may perform as a result of significant methanol recycle. Very few kinetic models have been developed for this catalyst system [45, 46, 47]. Of these, only Gunturu examined the possibility of methanol recycle. Therefore NREL reproduced this kinetic model using Polymath software. This kinetic model predicted that methanol entering the reactor would largely be converted to ethanol and methane. This model also predicts that maintaining high partial pressures of methanol in the reactor would further reduce the production of alcohols higher than ethanol. More detailed discussion on the kinetic model can be found in Appendix K.

After the reactor, the effluent is cooled to 110°F (43°C) through a series of heat exchangers while maintaining high pressure. First, the reacted syngas is cross exchanged with cooler process streams, lowering the temperature to 200°F (93°C). Air-cooled exchangers then bring the temperature down to 140°F (60°C). The final 30°F (17°C) drop is provided by cooling water. A knock-out drum (S-501) is then used to separate the liquids (primarily alcohols) from the remaining gas, which is comprised of unconverted syngas, CO_2, and methane. Aspen Plus contains other physical property packages that model non-ideal liquid systems much better than the Redlich-Kwong-Soave (RKS) equation of state used throughout the model. Therefore, the Non-Random Two-Liquid (NRTL) package was used to model the alcohol condensation.

From here, the liquid crude alcohols are sent to product purification while the residual syngas is superheated to 1500°F (816°C) and sent through an expander to generate additional power for

the process. The pressure is dropped from 970 to 35 psia prior to being recycled to the tar reformer. A 5% purge stream is sent to fuel combustion.

Alternate configurations will be discussed later in this report as will the economic sensitivity of certain synthesis parameters. One particular variation would be to recycle the unconverted syngas to the throat of the synthesis reactor instead of to the tar reformer. This would save money on upstream equipment costs because of lower process throughput, but would also lower yields because the CO_2 would build up in the recycle loop. The limit to the amount of unconverted syngas that could be recycled to the reactor is less than 50% because this would cause the H_2:CO ratio to grow well above 1.2.

Future experiments and analysis will examine the impacts of methanol recycle, and of variations in concentration of CO_2, CH_4, and other compounds. Alternate reactor designs will also be examined. For example, FT technology largely has switched to slurry reactors instead of fixed-bed reactors because the slurry fluidization achieves better heat and mass transfer properties that allow, in turn, for higher conversions. Such improvements could help to achieve the conversion targets outlined above and reduce the costs of major equipment items.

3.6. Alcohol Separation – Area 500

The mixed alcohol stream from Area 400 is sent to Area 500 where it is de-gassed, dried, and separated into three streams: methanol, ethanol, and mixed higher-molecular weight alcohols. The methanol stream is used to back-flush the molecular sieve drying column and then recycled, along with the water removed during back flushing, to the inlet of the alcohol synthesis reactor in Area 400. The ethanol and mixed alcohol streams are cooled and sent to product storage tanks.

Carbon dioxide is readily absorbed in alcohol. Although the majority of the non-condensable gases leaving the synthesis reactor are removed in the separator vessel, S-501, a significant quantity of these gases remains in the alcohol stream, especially at the high system pressure. These gases are removed by depressurizing from 970 to 60 psia. Most of the dissolved gasses separate from the alcohols in the knock-out vessel S-502. This gas stream is made up primarily of carbon dioxide with some small amounts of hydrocarbons and alcohols; it is recycled to the Tar Reformer in Area 300. After being vaporized by cross exchanging with steam to a 20°F (11°C) superheated temperature, the alcohol stream goes to the molecular sieve dehydrator unit operation.

The molecular sieve dehydrator design was based upon previous biochemical ethanol studies [5, 3]and assumed to have similar performance with mixed alcohols. In the biochemical ethanol cases, the molecular sieve is used to dry ethanol after it is distilled to the azeotropic concentration of ethanol and water (92.5 wt% ethanol). The adsorbed water is flushed from the molecular sieves with a portion of the dried ethanol and recycled to the rectification column. The water ultimately leaves out the bottom of the distillation column. In this thermochemical process, however, it was determined that drying the entire mixed alcohol stream before any other separation would be preferable. The adsorbed water is desorbed from the molecular sieves with a combination of depressurization and flushing with methanol. This methanol/water mixture is then recycled back to the Alcohol Synthesis section (A400).

The molecular sieve units require a superheated vapor. The liquid mixed alcohol stream is vaporized, superheated, and then fed to one of two parallel adsorption columns. The adsorption column preferentially removes water and a small amount of the alcohols. While one adsorption bed is adsorbing water, the other is regenerating. The water is desorbed from the bed during regeneration by applying a vacuum and flushing with dry methanol from D-505. This methanol/water mixture is recycled back to the Alcohol Synthesis section (A400). This methanol/water mixture is cooled to 140°F (60°C) using a forced air heat exchanger, and separated from any uncondensed vapor. The gaseous stream is recycled to the Tar Reformer and the condensate is pumped to 1,000 psia in P-514, and mixed with high-pressure syngas from compressor K-410 in Area 400 upstream of the synthesis reactor pre-heater.

The dry mixed alcohol stream leaving the mol sieve dehydrator enters into the first of two distillation columns, D-504. D-504 is a typical distillation column using trays, overhead condenser, and a reboiler. The methanol and ethanol are separated from the incoming stream with 99% of the incoming ethanol being recovered in the overhead stream along with essentially all incoming methanol. The D-504 bottom stream consists of 99% of the incoming propanol, 1% of the incoming ethanol, and all of the butanol and pentanol. The mixed alcohol bottoms is considered a co-product of the plant and is cooled and sent to storage. The methanol/ethanol overhead stream from D-504 goes to a second distillation column, D-505, for further processing.

D-505 separates the methanol from the binary methyl/ethyl alcohol mixture. The ethanol recovery in D-505 is 99% of the incoming ethanol and has a maximum methanol concentration of 0.5 mole percent to meet product specifications for fuel ethanol. The ethanol, which exits from the bottom of D-505 is cooled before being sent to product storage. The methanol and small quantity of ethanol exiting the overhead of column D-505 is used to flush the mol sieve column during its regeneration step as explained above. Currently, all of the methanol from D-505 is recycled through the mol sieve dehydrator and then to the synthesis reactor in Area 400.

3.7. Steam System and Power Generation – Area 600

This process design includes a steam cycle that produces steam by recovering heat from the hot process streams throughout the plant. Steam demands for the process include the gasifier, amine system reboiler, alcohol purification reboilers, and LO-CAT preheater. Of these, only the steam to the gasifier is directly injected into the process; the rest of the plant heat demands are provided by indirect heat exchange of process streams with the steam and have condensate return loops. Power for internal plant loads is produced from the steam cycle using an extraction steam turbine/generator (M-602). Power is also produced from the process expander (K-412), which takes the unconverted syngas from 965 psia to 35 psia before being recycled to the tar reformer. Steam is supplied to the gasifier from the low pressure turbine exhaust stage. The plant energy balance is managed to generate only the amount of electricity required by the plant. The steam system and power generation area is shown in PFD-P800-A601, -A602, and -A603 in Appendix H.

A condensate collection tank (T-601) gathers condensate from the syngas compressors and from the process reboilers along with the steam turbine condensate and make-up water. The total

condensate stream is heated to the saturation temperature and sent to the deaerator (T-603) to de-gas any dissolved gases out of the water. The water from the deaerator is first pumped to a pressure of 930 psia and then pre-heated to its saturation (bubble point) temperature using a series of exchangers. The saturated steam is collected in the steam drum (T-604). To prevent solids build up, water must be periodically discharged from the steam drum. The blowdown rate is equal to 2% of water circulation rate. The saturated steam from the steam drum is superheated with another series of exchangers. The superheated steam temperature and pressure were set as a result of pinch analysis. Superheated steam enters the turbine at 900ºF and 850 psia and is expanded to a pressure of 175 psia. The remaining steam then enters the low pressure turbine and is expanded to a pressure of 65 psia. Here a slipstream of steam is removed and sent to the gasifier and other exchangers. Finally, the steam enters a condensing turbine and is expanded to a pressure of 1.5 psia. The steam is condensed in the steam turbine condenser (H-601) and the condensate re-circulated back to the condensate collection tank.

The integration of the individual heat exchangers can only be seen in the PFDs included in the Appendices. To close the heat balance of the system, the Aspen Plus model increases or decreases the water flowrate through the steam cycle until the heat balance of the system is met.

This process design assumes that the two compressors in this process (K301, K410) are steam-driven. All other drives for pumps, fans, etc are electric motors. Additionally, an allowance of 0.7 MW of excess power is made to total power requirement to account for miscellaneous usage and general electric needs (lights, computers, etc). Table 10 contains the power requirement of the plant broken out into the different plant sections. Because syngas compression is steam driven, it is not a demand on the power system, which makes the total power requirement much less than it would be if compression demands were included. The plant power demands and power production were designed specifically to be nearly equal. Therefore, no excess power is being sold to or purchased from the grid. This plant was designed to be as energy self-sufficient as possible. This was accomplished by burning a portion of the “dirty” unreformed syngas in the fuel combustor (Section 300). While this does have a negative impact on the overall alcohol yields of the process, it does negate the purchase of natural gas or grid power.

Table 10. Plant Power Requirements

Plant Section	Power Requirement (kW)
Feed Handling & Drying	742
Gasification	3,392
Tar Reforming, Cleanup, & Conditioning	1,798
Mixed Alcohol Synthesis	119
Alcohol Separation and Purification	256
Steam System & Power Generation	431 required 7,994 generated
Cooling Water & Other Utilities	529
Miscellaneous	727
Total plant power requirement	7,994

3.8. Cooling Water and Other Utilities – Area 700

The cooling water system is shown on PFD-P800-A701. A mechanical draft cooling tower (M-701) provides cooling water to several heat exchangers in the plant. The tower utilizes large fans to force air through circulated water. Heat is transferred from the water to the surrounding air by the transfer of sensible and latent heat. Cooling water is used in the following pieces of equipment:

- the sand/ash cooler (M-201) which cools the sand/ash mixture from the gasifier/combustor
- the quench water recirculation cooler (M-301) which cools the water used in the syngas quench step
- the water-cooled aftercooler (H-303) which follows the syngas compressor and cools the syngas after the last stage of compression
- the LO-CAT absorbent solution cooler (H-305) which cools the regenerated solution that circulates between the oxidizer and absorber vessels
- the reacted syngas cooler (H-414) which cools the gas in order to condense out the liquid alcohols
- the end product finishing coolers (H-591, H-593) for both the higher alcohols co-product and the primary ethanol product
- the blowdown water-cooled cooler (H-603) which cools the blowdown from the steam drum
- the steam turbine condenser (H-601) which condenses the steam exiting the steam turbine

Make-up water for the cooling tower is supplied at 14.7 psia and 60°F (16°C). Water losses include evaporation, drift (water entrained in the cooling tower exhaust air), and tower basin blowdown. Drift losses were estimated to be 0.2% of the water supply. Evaporation losses and blowdown were calculated based on information and equations in Perry, et al. [27]. The cooling water returns to the process at a supply pressure of 65 psia and temperature is 90°F (32°C). The cooling water return temperature is 110°F (43°C).

An instrument air system is included to provide compressed air for both service and instruments. The instrument air system is shown on PFD-P800-A701. The system consists of an air compressor (K-701), dryer (S-701) and receiver (T-701). The instrument air is delivered at a pressure of 115 psia, a moisture dew point of -40°F (-40°C), and is oil free.

Other miscellaneous items that are taken into account in the design include:

- a firewater storage tank (T-702) and pump (P-702)
- a diesel tank (T-703) and pump (P-703) to fuel the front loaders
- an olivine truck scale with dump (M-702) and an olivine lock hopper (T-705) as well as an MgO lock hopper (T-706)
- a hydrazine storage tank (T-707) and pump (P-705) for oxygen scavenging in the cooling water

This equipment is shown on PFD-P800-A702.

3.9. Additional Design Information

Table 11 contains some additional information used in the Aspen Plus model and production design.

Table 11. Utility and Miscellaneous Design Information

Item	Design Information
Ambient air conditions (1,2, and 3)	Pressure: 14.7 psia $T_{Dry\ Bulb}$: 90°F $T_{Wet\ Bulb}$: 80°F Composition (mol%): N_2: 75.7% O_2: 20.3% Ar: 0.9% CO_2: 0.03% H_2O: 3.1%
Pressure drop allowance	Syngas compressor intercoolers = 2 psi Heat exchangers and packed beds = 5 psi

(1) In the GPSA *Engineering Data Book* [48], see Table 11.4 for typical design values for dry bulb and wet bulb temperature by geography. Selected values would cover summertime conditions for most of lower 48 states.
(2) In Weast [49], see F-172 for composition of dry air. Nitrogen value adjusted slightly to force mole fraction closure using only N_2, O_2, Ar, and CO_2 as air components.
(3) In Perry, et al. [27], see psychrometric chart, Figure 12-2, for moisture content of air.

3.10. Pinch Analysis

A pinch analysis was performed to analyze the energy network of the biomass gasification to ethanol production process. The pinch technology concept offers a systematic approach to optimum energy integration of the process. First temperature and enthalpy data were gathered for the "hot" process streams (i.e., those that must be cooled), "cold" process streams (i.e., those that must be heated), and utility streams (such as steam, flue gas, and cooling water). The minimum approach temperature was set at 42.6°F. A temperature versus enthalpy graph (the "composite curve") was constructed for the hot and cold process streams. These two curves are shifted so that they touch at the pinch point. From this shifted graph, a grand composite curve is constructed which plots the enthalpy differences between the hot and cold composite curves as a function of temperature. The composite curve is shown in Figure 7. From this figure the heat exchanger network of the system was determined.

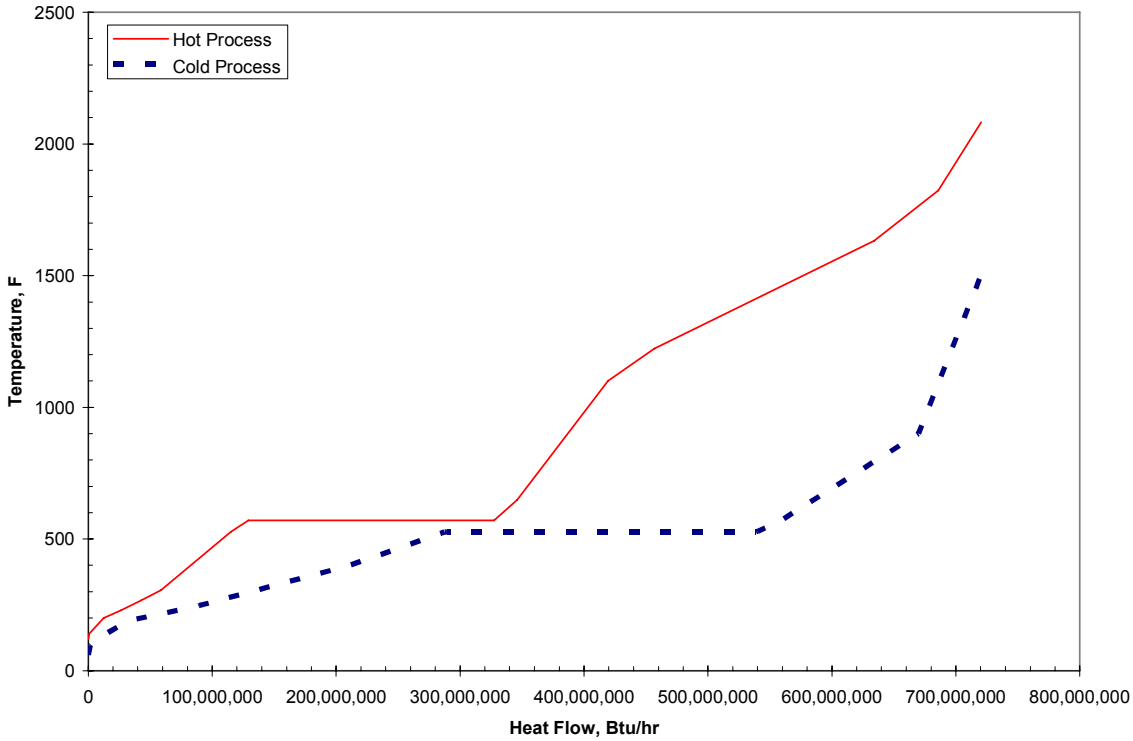

Figure 7. Pinch analysis composite curve

The total heating enthalpy equals the total cooling enthalpy because the Aspen model is designed to adjust the water flowrate through the steam cycle until the heat balance in the system is met. Because no outside utilities were used in this process, all heating and cooling duties are satisfied through process-process interchanges or process-steam interchanges. The minimum vertical distance between the curves is ΔT_{min}, which is theoretically the smallest approach needed in the exchange network. For this design, the pinch occurs at ~ H = 280,000,000 BTU/hr, and the upper and lower pinch temperatures are 570.0ºF and 527.4ºF, respectively, giving a ΔT_{min} of 42.6ºF.

Design of the heat exchange network for the above the pinch and below pinch regions are done separately. While pinch theory teaches that multiple solutions are possible, this particular solution has the advantage that heat released by the alcohol synthesis reactor is dissipated by raising steam. This is a standard design practice for removing heat from methanol synthesis and other similar reactors. The left-hand side of the composite curve shows the below pinch curves are constrained at the pinch and are also nearly pinched at the very left-hand side in the ~ 100ºF range. This makes heat exchanger network design below the pinch more difficult.

3.11. Energy Balance

Energy integration is extremely important to the overall economics and efficiency of this process. Therefore a detailed understanding of how and where the energy is utilized and

recovered is required. Detailed energy balances around the major process areas were derived using data from the Aspen Plus simulation. Comparing the process energy inputs and outputs enables the energy efficiency of the process to be quantified. Also, tracing energy transfer between process areas makes it possible to identify areas of potential improvement to the energy efficiency.

The philosophy of defining the "energy potential" of a stream is somewhat different from what was done for the biochemical ethanol process design report [50]. For that analysis the definition of the energy potential was based upon the higher heating values (HHVs) of each component. This HHV basis is convenient when a process is primarily made up of aqueous streams in the liquid phase. Since liquid water at the standard temperature has a zero HHV, the contribution for any liquid water is very small, especially as compared to any other combustible material also present in the stream. However, the thermochemical ethanol production process differs significantly in that most of the process streams are in the gas phase. To remove the background contributions of the water, the energy potential is based instead upon the lower heating values (LHVs) of each component.

The total energy potential for a stream has other contributions beyond that of the heating value. Other energy contributions are:

- Sensible heat effect – the stream is at a temperature (and pressure) different from that of the standard conditions at which the heating values are defined.
- Latent heat effect – one or more components in the stream are in a different phase from that at which their heating values are defined.
- Non-ideal mixing effect – any heating or cooling due to blending dissimilar components in a mixture.

The procedure for actually calculating the energy potential of a stream is also different from what was done prior. When the biochemical ethanol process was analyzed, the contributions for the HHVs, the sensible heating effects, and the latent heat effects were directly computed and combined. The calculations of the sensible and latent heat effects were done in an approximate manner. For example, the sensible heat effect was estimated from the heat capacity at the stream's temperature, pressure, and composition; it was assumed that this heat capacity remained constant over the temperature range between the stream's temperature and the standard temperature. For the relatively low temperatures of the biochemical ethanol process systems, this assumption makes sense. However, for this thermochemical process design, this assumption is not accurate because of the much larger differences between the process stream temperatures and the standard temperature

The enthalpy values reported by Aspen Plus can actually be adjusted in a fairly simple manner to reflect either an HHV or LHV basis for the energy potential. The enthalpies calculated and reported by Aspen Plus are actually based upon a heat of formation for the energy potential of a stream. So, the reported enthalpies already include the sensible, latent, and non-ideal mixing effects. If certain constants in Aspen's enthalpy expressions could be modified to be based on either the components' HHVs or LHVs instead of the heats of formation then Aspen Plus would report the desired energy potential values. However, since the constants cannot be easily changed, the reported enthalpy values were adjusted instead as part of a spreadsheet calculation.

The factors used to adjust the reported enthalpies were calculated from the difference between each component's heat of combustion (LHV) and the reported pure component enthalpy at combustion conditions.

This process for thermochemical conversion of cellulosic biomass was designed with the goal of being as energy self-sufficient. Natural gas inputs that could be used to fire the char combustor and fuel combustor have been eliminated. Instead, a slipstream of "dirty" unreformed syngas is used to meet the fuel demand. The downside to this is a decrease in ethanol yield. In addition, the process was designed to require no electricity be purchased from the grid. Instead, the integrated combined heat and power system supplies all steam and electricity needed by the plant. Consequently no electricity is sold as a co-product either. The only saleable products are the fuel ethanol and a higher molecular weight mixed alcohol co-product.

The major process energy inputs and outlets are listed in Table 12, along with their energy flowrates. Each input and output is also ratioed to the biomass energy entering the system. The biomass is of course the primary energy input, however other energy inputs are required. Air is required for both the fuel combustor as well as the char combustor; however it remains a minor energy input. Some water is used to wet the ash leaving the gasification system, however, the majority of process water is used for boiler feed water makeup and cooling water makeup. A large negative energy flow value is associated with this because it enters the process as a liquid.

Table 12. Overall Energy Analysis (LHV basis)

	Energy Flow (MMBTU/hr, LHV basis)	Ratio to Feedstock Energy Flow
Energy Inlets		
Wood Chip Feedstock (wet)	1269.7	1.000
Natural Gas	0.0	0.000
Air	2.3	0.002
Olivine	0.0	0.000
MgO	0.0	0.000
Water	-133.4	-0.105
Tar Reforming Catalyst	0.0	0.000
Other	0.0	0.000
Total	**1138.6**	**0.897**
Energy Outlets		
Ethanol	619.1	0.488
Higher Alcohols Co-product	122.1	0.096
Cooling Tower Evaporation	17.0	0.013
Flue Gas	46.2	0.036
Sulfur	0.4	0.000
Compressor Heat	178.3	0.140
Heat from Air-cooled Exchangers	222.0	0.175
Vents to Atmosphere (including excess CO_2)	0.8	0.001
Sand and Ash	16.4	0.013
Catalyst Purge	0.0	0.000
Wastewater	-1.2	-0.001
Other	-82.5	-0.064
Total	**1138.6**	**0.897**

Besides the saleable alcohol products, other important process energy outlets also exist. There are two sources of flue gas: the char combustor and the reformer fuel combustor. Together, they total about 4% of the energy in the raw biomass. Cooling tower evaporative losses, excess CO_2 vent to the atmosphere, wastewater, and ash streams are also minor process energy outlets. However, two of the larger energy outlets come from air-cooled interstage cooling of the compressors, and from several other air-cooled heat exchangers. Together, these two loss categories represent over 30% of the energy that is not recovered within the process. The "other" category consists primarily of other losses from the cooling tower system (drift and blowdown), but also accounts for energy losses due to ambient heating effects and mechanical work (pump, compressor) efficiency losses.

Some of this lost heat could potentially be recovered by using cooling water instead of air-cooled exchangers. However, this would require additional makeup water, and limiting water usage throughout the process was a primary design consideration. Additional heat integration with process streams could also be examined, however, there comes a point where this becomes too complex and costly for a cost-effective design and practical operation.

Overall, the TC process is approximately 46% efficient on an LHV basis for moisture-free biomass, as shown in the Appendices. Table 12 shows that approximately 58% of the energy in the wet raw biomass is recovered in the two alcohol products. Improvements in these energy efficiencies could potentially result in additional cost savings to the process.

3.12. Water Issues

Water is required as a reactant, a fluidizing agent, and a cooling medium in this process. As a reactant, it participates in reforming and water gas shift reactions. Using the BCL gasifier, it also acts as the fluidizing agent in the form of steam. Its cooling uses are outlined in Section 3.8.

Water usage is becoming an increasingly important aspect of plant design, specifically with regards to today's ethanol plants. Most ethanol plants reside in the Midwest where many places are experiencing significant water supply concerns51. For several years, significant areas of water stress have been reported during the growing season, while livestock and irrigation operations compete for the available resources.

Today's dry mill ethanol plants have a high degree of water recycle. In fact many plants use what is known as a "zero discharge" design where no process water is discharged to wastewater treatment. The use of centrifuges and evaporators enables this recycle of process water. Therefore, much of the consumptive water demand of an ethanol plant comes from the evaporative losses from the cooling tower and utility systems. Oftentimes well water is used to supply the water demands of the ethanol plants, which draws from the local aquifers that are not readily recharged. This is driven by the need for high quality water in the boiler system. Studies have shown that water usage by today's corn ethanol plants range from 3-7 gallons per gallon of ethanol produced. This means that a 50 MM gal/yr dry mill will use between 150-350 MM gallons/yr of water that is essentially a non-renewable resource. This ratio however has decreased over time from an average of 5.8 gal/gal in 1998 to 4.2 gal/gal in 2005.

Therefore, a primary design consideration for this process was the minimization of fresh water requirements, which therefore meant minimizing the cooling water demands and recycling process water as much as possible. Air-cooling was used in several areas of the process in place of cooling water (e.g. distillation condensers, compressor interstage cooling, etc). However there are some instances where cooling water is required to reach a sufficiently low temperature that air-cooling can not reach.

Table 13 quantifies the particular water demands of this design. Roughly 71% of the fresh water demand is from cooling tower makeup, with most of the remainder needed as makeup boiler feed water. Some of this water is directly injected into the gasifier, but other system losses (blowdown) also exist. The overall water demand is considerably less than today's ethanol plants. This design requires less than 2 gallons of fresh water for each gallon of ethanol produced. It may be worthwhile for the entire ethanol industry to more thoroughly investigate efficiency gains that are possible within these utility systems.

Table 13. Process Water Demands for Thermochemical Ethanol

Fresh Water Demands	lb per hour
Cooling Tower Makeup	84,672
Boiler Feed Makeup	34,176
Sand/ash Wetting	243
Total	**119,091**
Overall Water Demand (gal water / gal ethanol)	**1.94**

4. Process Economics

The total project investment (based on total equipment cost) as well as variable and fixed operating costs is developed first. With these costs, a discounted cash flow analysis was used to determine the production cost of ethanol when the net present value of the project is zero. This section describes the cost areas and the assumptions made to complete the discounted cash flow analysis.

4.1. Capital Costs

The following sections discuss the methods and sources for determining the capital cost of each piece of equipment within the plant. A summary of the individual equipment costs can be found in Appendix D.

The capital cost estimates are based as much as possible on the design work done by Spath et al . for the hydrogen design report [9] and Aden et al. for the biochemical conversion design report [3]. The majority of the Spath et al. costs came from literature and Questimate (an equipment capital cost estimating software tool by Aspen Tech), not from vendor quotes. For these estimated costs, the purchased cost of the equipment was calculated and then cost factors were used to determine the installed equipment cost. This method of cost estimation has an expected accuracy of roughly +30% to -10%. The factors used in determining the total installed cost (TIC) of each piece of equipment are shown in Table 14 [52]. The Aden et al. cost estimates came from a variety of sources (including vendor quotes); the installation factors for these estimates may be significantly different from what is in Table 14.

Table 14. General Cost Factors in Determining Total Installed Equipment Costs

	% of TPEC
Total Purchased Equipment Cost (TPEC)	100
Purchased equipment installation	39
Instrumentation and controls	26
Piping	31
Electrical systems	10
Buildings (including services)	29
Yard improvements	12
Total Installed Cost (TIC)	247

The indirect costs (non-manufacturing fixed-capital investment costs) were also estimated as per Spath et al. using cost factors. The factors are shown in Table 15 [52] and have been put as percentages in terms of total purchased equipment cost, total installed cost (TIC), and total project investment (TPI, the sum of the TIC and the total indirect costs).

Table 15. Cost Factors for Indirect Costs

Indirect Costs	% of TPEC	% of TIC	% of TPI
Engineering	32	13	9
Construction	34	14	10
Legal and contractors fees	23	9	7
Project contingency	7.4	3	2
Total Indirect Costs	96.4	39	28

The biomass handling and drying costs as well as the gasification and gas clean up costs were estimated by Spath et al. using several reports by others that documented detailed design and cost estimates. Some of the reports gave costs for individual pieces of equipment while others lumped the equipment costs into areas. The costs from the reports were amalgamated into:

- feedstock handling and drying.
- gasification and clean up.

Costs from those reports scaled to a 2,000 bone dry tonne/day plant are given in Table 16. Table 17 gives the basic dryer and gasifier design basis for the references. Spath et al. used an average feed handling and drying cost from all of the literature sources and an average gasifier and gas clean up cost for the references using the BCL gasifier.

Table 16. Feed Handling & Drying and Gasifier & Gas Clean Up Costs from the Literature Scaled to 2,000 tonne/day plant

Reference	Scaled Feed Handling and Drying Cost $K (2002)	BCL - Scaled Gasifier and Gas Clean Up Cost $K (2002)
Breault and Morgan [53] [(a)]	$15,048	$15,801
Dravo Engineering Companies [54] [(a)]	$14,848	$15,774
Weyerhaeuser, et al., [55] [(a)]	$21,241	$24,063
Stone & Webster, et al. [56] [(a)]	$25,067	---
Wan and Malcolm [57] [(a)]	$18,947 [(b)] $14,098 [(c)]	$11,289 [(b)] $11,109 [(c)]
Weyerhaeuser [58] [(a)]	$13,468	$10,224
Wright and Feinberg [59] [(a)]	$26,048 – BCL design $21,942 – GTI design	$12,318 - quench [(d)] $26,562 - HGCU [(d)]
Craig [60]	$13,680	---
AVERAGE	**$18,840**	**$16,392**

(a) From detailed design and cost estimates
(b) Estimated from a 200 dry ton/day plant design.
(c) Estimated from a 1,000 dry ton/day plant design.
(d) Two separate gas clean up configurations were examined for the BCL gasifier. HGCU = hot gas clean up.

Table 17. System Design Information for Gasification References

Reference	Feed Handling and Drying	BCL Gasifier and Gas Clean Up
Breault and Morgan [53]	Rotary dryer	Cyclones, heat exchange & scrubber
Dravo Engineering Companies [54]	Rotary drum dryer	Cyclones, heat exchange & scrubber
Weyerhaeuser, et al. [55]	Steam dryer	Cyclones, heat exchange, tar reformer, & scrubber
Stone & Webster, et al. [56]	Flue gas dryer	---
Wan and Malcolm [57]	Flue gas dryer	Cyclones, heat exchange & scrubber
Weyerhaeuser [58]	Flue gas dryer	Cyclones, heat exchange & scrubber
Wright and Feinberg [59]	Unclear	Quench system – details are not clear Tar reformer system – details are not clear
Craig [60]	Rotary drum dryer	---

In this report, we have further broken apart the gasification and clean up costs into their respective areas. Based upon the Utrecht report [19] these were split 50/50 between the two areas.

The cost of reactors, heat exchangers, compressors, blowers and pumps were estimated for a "base" size using Questimate and then scaled using material and energy balance results from the Aspen Plus simulation. The reactors were sized based on a gas hourly space velocity (GHSV), where GHSV is measured at standard temperature and pressure, 60°F and 1 atm [61], and a height to diameter ratio of 2. The GHSV for the mixed alcohol reactor and tar reformer were set at 4,000/hr and 2475/hr, respectively. These are in agreement with typical values given by Kohl and Nielsen [62]. The heat exchanger costs were mostly developed based on the required surface area as calculated from the heat transfer equation appropriate for a 1-1 shell and tube heat exchanger:

$$Q = UA(\Delta T)_{lm} \quad \Rightarrow \quad A = \frac{Q}{U(\Delta T)_{lm}}$$

where Q is the heat duty, U is the heat transfer coefficient, A is the exchanger surface area, and $(\Delta T)_{lm}$ is the log mean temperature difference. The heat transfer coefficients were estimated from literature sources, primarily Perry, et al [27]. However, many of the exchangers used in the pinch analysis are subsequently scaled from their calculated duties. At present, these duties will not change as the process changes, unless the pinch calculations are specifically updated. This is acceptable as long as the total cost of the heat exchange network remains a small fraction of the overall minimum ethanol plant gate price, and as long as plant scale does not change significantly.

For the various pieces of equipment, the design temperature is determined to be the operating temperature plus 50°F (28°C) [63]. The design pressure is the higher of the operating pressure plus 25 psi or the operating pressure times 1.1 [63].

The following costs were estimated based on the Aden, et al. design report: [3]

- cooling tower.
- plant and instrument air.
- steam turbine/generator/condenser package.
- Deaerator.
- alcohol separation equipment (e.g., the distillation columns and molecular sieve unit).

Appendix G contains the design parameters and cost references for the various pieces of equipment in the plant.

4.2. Operating Costs

There are two kinds of operating costs: variable and fixed costs. The following sections discuss the operating costs including the assumptions and values for these costs.

There are many variable operating costs accounted for in this analysis. The variables, information about them, and costs associated with each variable are shown in Table 18.

Table 18. Variable Operating Costs

Variable	Information and Operating Cost
Tar reformer catalyst	To determine the amount of catalyst inventory, the tar reformer was sized for a gas hourly space velocity (GHSV) of 2,476/hr based on the operation of the tar reformer at NREL's TCPDU where GHSV is measured at standard temperature and pressure [61]. Initial fill then a replacement of 1% per day of the total catalyst volume. Price: $4.67/lb [64]
Alcohol Synthesis Catalyst	Initial fill then replaced every 5 years based on typical catalyst lifetime. Catalyst inventory based on GHSV of 6,000/hr. Price: $5.25/lb [7]
Gasifier bed material	Synthetic olivine and MgO. Delivered to site by truck equipped with self-contained pneumatic unloading equipment. Disposal by landfill. Olivine price: $172.90/ton [65] MgO price: $365/ton [66]
Solids disposal cost	Price: $18/ton [67]
Diesel fuel	Usage: 10 gallon/hr plant wide use Price: $1.00/gallon [68]
Chemicals	Boiler chemicals – Price: $2.80/lb [3] Cooling tower chemicals – Price: $2.00/lb [3] LO-CAT chemicals – Price: $150/tonne of sulfur produced [69]
Waste Water	The waste water is sent off-site for treatment. Price: $2.07/100ft^3 [70]

Previous biomass gasification studies have not looked at fixed operating costs (i.e. salaries, overhead, maintenance, etc) in detail, therefore little data were available. As a result, the fixed operating costs for a biochemical ethanol facility given in Aden, et al., 2002 [3] were used as a starting point to develop fixed costs for this thermochemical design.

The fixed operating costs used in this analysis are shown in Table 19 (labor costs) and Table 20 (other fixed costs). They are shown in 2002 U.S. dollars. The following changes in base salaries and number of employees were made compared to those used in the ethanol plant design in Aden, et al., 2002 [3].

- Plant manager salary raised from $80,000 to $110,000
- Shift supervisor salary raised from $37,000 to $45,000
- Lab technician salary raised from $25,000 to $35,000
- Maintenance technician salary raised from $28,000 to $40,000
- Shift operators salaries raised from $25,000 to $40,000
- Yard employees salaries raised from $20,000 to $25,000 and number reduced from 32 to 12.
- General manager position eliminated
- Clerks and secretaries salaries raised from $20,000 to $25,000 and number reduced from 5 to 3.

The number of yard employees was changed to reflect a different feedstock and feed handling system compared to Aden, et al., 2002 [3]. Handling baled stover requires more hands-on processing when compared to a wood chip feedstock. Based on a 4-shift system, 3 yard employees were estimated to be needed, mostly to run the front end loaders. The general manager position was eliminated because a plant manager would likely be sufficient for this type of facility. Biomass gasification plants are more likely to be operated by larger companies instead of operating like the dry mill ethanol model of farmer co-ops. Finally, the number of clerks and secretaries was reduced from 5 to 3. The estimate of three comes from needing 1 to handle the trucks and scales entering and leaving the facility, 1 to handle accounting matters, and 1 to answer phones, do administrative work, etc.

Table 19. Labor Costs

Position	Salary	Number	Total Cost
Plant manager	$110,000	1	$110,000
Plant engineer	$65,000	1	$65,000
Maintenance supervisor	$60,000	1	$60,000
Lab manager	$50,000	1	$50,000
Shift supervisor	$45,000	5	$225,000
Lab technician	$35,000	2	$70,000
Maintenance technician	$40,000	8	$320,000
Shift operators	$40,000	20	$800,000
Yard employees	$25,000	12	$300,000
Clerks & secretaries	$25,000	3	$75,000
Total salaries (2002 $)			$2,080,000
(2005 $)			$2,270,000

Since the salaries listed above are not fully loaded (i.e. do not include benefits), a general overhead factor was used. This also covers general plant maintenance, plant security, janitorial services, communications, etc. The 2003 PEP yearbook [71] lists the national average loaded labor rate at $37.66 per hr. Using the salaries in Table 19 above along with the 60% general overhead factor from Aden, et al. [3] gave an average loaded labor rate of $30 per hr. To more closely match the PEP yearbook average, the overhead factor was raised to 95%. The resulting average loaded labor rate was $36 per hr.

Table 20. Other Fixed Costs

Cost Item	Factor	Cost
General overhead	95% of total salaries	$2,155,000
Maintenance [52]	2% of total project investment	$3,817,000
Insurance & taxes [52]	2% of total project investment	$3,817,000

The updated salaries in Table 19 above were examined against salaries from a free salary estimation tool [72] which uses Bureau of Labor Statistics data and several other sources. Because the biomass analysis does not reflect a specific site in the United States, National Average Salaries for 2003 were used. With such an extensive listing of job titles in the salary estimation tool, a general position such as “clerks and secretaries” could be reflected by multiple job titles. In these instances, care was taken to examine several of the possible job titles that were applicable. A list of the job positions at the production plant and the corresponding job titles in the salary estimation tool [72] is shown in Table 21. Overall, the salaries used in the biomass-to-hydrogen production plant design are close to the U.S. national average values given in column 4.

Table 21. Salary Comparison

Job Title in Biomass Plant	Corresponding Job Title in Salary Estimating Tool [72]	Salary Range (17th to 67th percentile)	Average Salary (U.S. national average)	Salary used in Biomass Plant Design (see Table 19)
Plant manager	Plant manager (experience)	$81,042-$220,409	$106,900	$110,000
Plant engineer	Plant engineer	$36,213-$66,542	$58,324	$65,000
Maintenance supervisor	Maintenance crew supervisor	$35,036-$53,099	$45,191	$60,000
	Supervisor maintenance	$34,701-$56,097	$47,046	
	Supervisor maintenance & custodians	$23,087-$45,374	$39,924	
Lab manager	Laboratory manager	$38,697-$70,985	$51,487	$50,000
Shift supervisor	Supervisor production	$32,008-$51,745	$43,395	$45,000
Lab technician	Laboratory technician	$25,543-$41,005	$34,644	$35,000
Maintenance technician	Maintenance worker	$27,967-$46,754	$39,595	$40,000
Shift operators	Operator control room	$33,983-$61,362	$49,243	$40,000
Yard employees	Operator front end loader	$24,805-$39,368	$31,123	$25,000
Clerks & secretaries	Administrative clerk	$19,876-$25,610	$26,157	$25,000
	Secretary	$20,643-$31,454	$26,534	
	Clerk general	$15,984-$25,610	$22,768	

Overall, Aden, et al. [3] lists fixed operating costs totaling $7.54MM in $2000. Using the labor indices, this equates to $7.85MM in $2002. On the other hand, the mixed alcohols design report has fixed operating costs totaling $12.06MM in $2005.

4.3. Value of Higher Alcohol Co-Products

The alcohol synthesis process will create higher molecular weight alcohols. How this co-product is valued will depend upon its end market. There were two extreme cases envisioned. At the high end, these might be sold into the chemical market. This could command a high value for this co-product, upwards to $3.70 to $4.20 per gallon [7]. However, it is unlikely that the market would support more than one or two biomass plants to support these prices. Because of this, the biomass process did not include any detailed separation or clean-up of the separate alcohols. It is envisioned that if this co-product was sold for this purpose, it would be transferred "over the fence" as is and the buyer would take on the costs of separation and clean-up. So, even at the high end, the highest value would be some fraction of the chemical market value.

At the low end, the co-product could command a value for a fuel with minimal ASTM standards on its specifications. This would be priced similar to a residual fuel oil. Historically, this is about 80% of gasoline price [73]. Using the ethanol minimum plant gate price as a scaled reference gasoline price (adjusted for ethanol's lower heating value), this translates to $0.85 per gallon.

For the baseline case, a middle ground was chosen. It is anticipated that the higher alcohols would make an excellent gasoline additive or gasoline replacement in its own right – engine testing and certification would be required. If this is done, then it should command a price similar to that of gasoline. Again using the ethanol minimum plant gate price as a scaled reference gasoline price and adjusting to n-propanol's heating value (the major constituent of the higher alcohol stream), then its value should be $1.25 per gallon. However, since no special efforts were taken in the process design to clean up this stream to meet anticipated specs, its value is discounted to $1.15 per gallon.

4.4. Minimum Ethanol Plant Gate Price

Once the capital and operating costs were determined, a minimum ethanol selling price (MESP) was determined using a discounted cash flow rate of return analysis. The methodology used is identical to that used in Aden, et al., (2002) [3]. The MESP is the selling price of ethanol that makes the net present value of the process equal to zero with a 10% discounted cash flow rate of return over a 20 year plant life. The base case economic parameters used in this analysis are given in Table 22. A sensitivity analysis was performed to examine the MESP for different financial scenarios. These are discussed in Section 4.

Table 22. Economic Parameters

Assumption	Value
Internal rate of return (after-tax)	10%
Debt/equity	0%/100%
Plant life	20 years
General plant depreciation	200% DDB
General plant recovery period	7 years
Steam plant depreciation	150% DDB
Steam plant recovery period	20 years
Construction period 1st 6 months expenditures Next 12 months expenditures Last 12 months expenditures	2.5 years 8% 60% 32%
Start-up time Revenues Variable costs Fixed costs	6 months 50% 75% 100%
Working capital	5% of Total Capital Investment
Land	6% of Total Purchased Equipment Cost (Cost taken as an expense in the 1st construction year)

Note: The depreciation amount was determined using the same method as that documented in Aden, et al. [3] using the IRS Modified Accelerated Cost Recovery System (MACRS).

5. Process Economics, Sensitivity Analyses, and Alternate Scenarios

The cost of ethanol as determined in the previous section was derived using technology that has been developed and demonstrated or is currently being developed as part of the OBP research program. Combined, all process, market, and financial targets in the design represent what must be achieved to obtain the reported $1.01 per gallon. A summary of the breakdown of costs are depicted in Figure 8 and further tabulated in Appendix F.

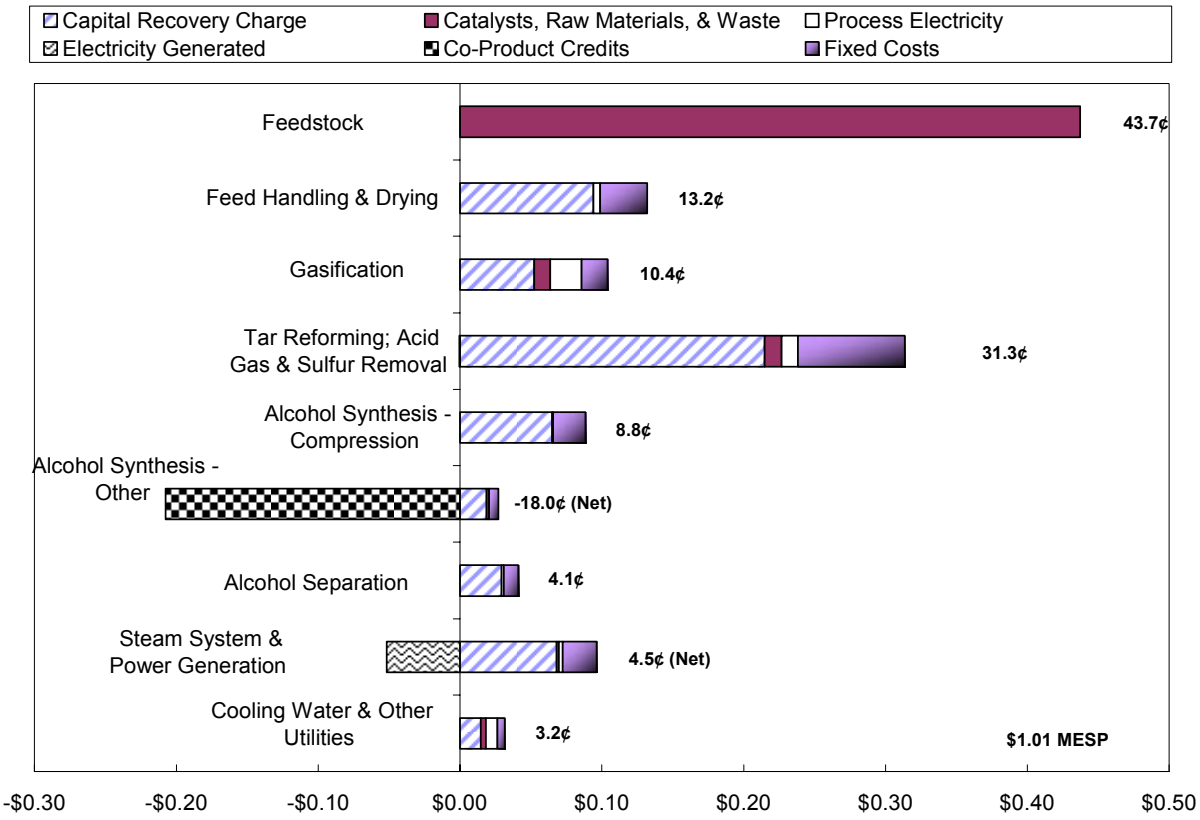

Figure 8. Cost contribution details from each process area

This cost contribution chart appears to show two different co-product credits: alcohols from the Alcohol Synthesis area and electricity from the Steam System & Power Generation area. However, the process was adjusted so the electricity generated is balanced by the electricity required by all other areas, so there is no net credit for electricity generation.

The cost year chosen for the analysis had a significant effect on the results. As discussed in Section 1.1, capital costs increased significantly after 2003 primarily because of the large increase in steel costs worldwide. Figure 9 depicts how the MESP for this process would change depending on the cost year chosen for the analysis. Notice that between the years 2000 to 2003 the MESP would be much lower, $0.89 to $0.91 per gallon ethanol, instead of the $1.01 determined for 2005. The values for 2006 are tentative, since all factors necessary for the MESP calculation have not yet been published.

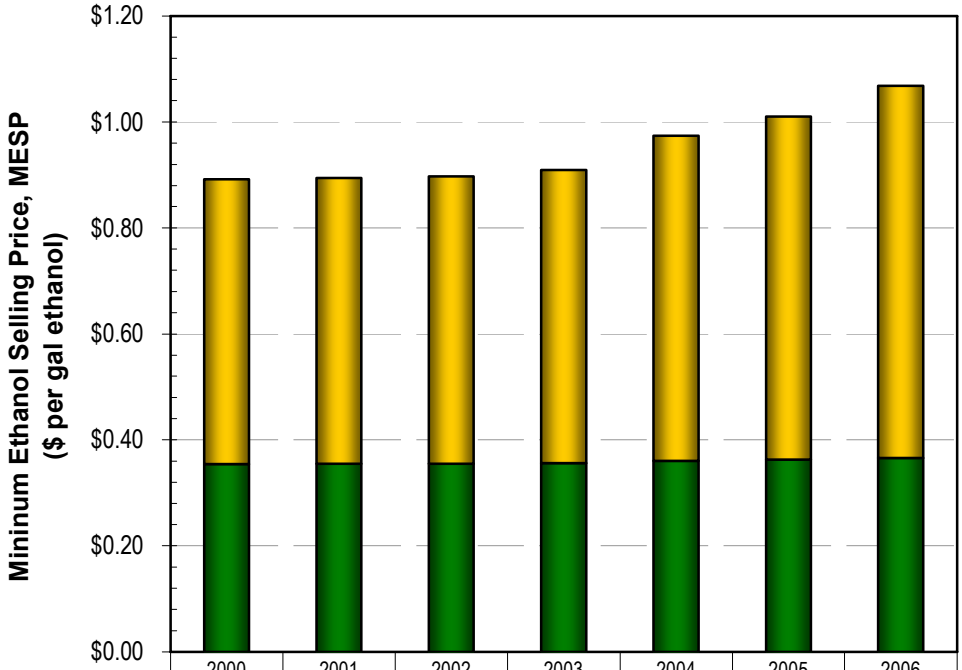

	2000	2001	2002	2003	2004	2005	2006
Conversion Costs	$0.54	$0.54	$0.54	$0.55	$0.61	$0.65	$0.70
Feedstock Contribution	$0.35	$0.35	$0.36	$0.36	$0.36	$0.36	$0.37
Minimum Ethanol Selling Price ($/gal)	$0.89	$0.89	$0.90	$0.91	$0.97	$1.01	$1.07

Figure 9. Effect of cost year on MESP[h]

The process costs (as indicated by the MESP) are determined from various assumptions on technology (based upon 2012 research targets), markets (such as the value of the higher alcohol co-products), and various financial assumptions (such as required Return on Investment, ROI). When any research target cannot be obtained, or a market or financial assumption does not hold, then the MESP is affected to varying degrees. In addition, uncertainty about equipment design and installation and construction costs will impact the economics. The key is to understand the impact of those types of parameters that are likely to vary, and how they might be controlled to a definable range. Discussed here are process targets that had been identified *a priori* as key ones to understand and achieve. (As can be seen from the sensitivity results, many items examined had much less affect on the MESP than had been thought.) In most cases, values used for the sensitivities are picked from current experimental data, to demonstrate the effect of technology advancement (or lack of) on the economic viability of the process.

[h] Note that the relative splits between feedstock and conversion costs have been scaled to attribute some of the costs to the mixed alcohol co-products. So, the feedstock contribution appears to be different than what is depicted in the cost contribution chart for the different areas.

The results for the sensitivity analysis discussed in the following sections are depicted in Figure 10; those sensitivities directly impacted by research programs are shown first. Nearly all of these ranges represent variations of a single variable at a time (e.g., ash content while holding the ratio of the non-ash elements constant). There are a couple exceptions to this:

- The feedstock comparison of corn stover to lignin necessitated varying the ultimate elemental analysis, ash content, and moisture content simultaneously.
- The Combined Tar Reformer Conversions incorporated all of the ranges listed for the methane, benzene, and tar simultaneously.

Note that all items in the chart have values associated with them. If a bar is not readily seen, then the MESP effect over the range listed is insignificant.

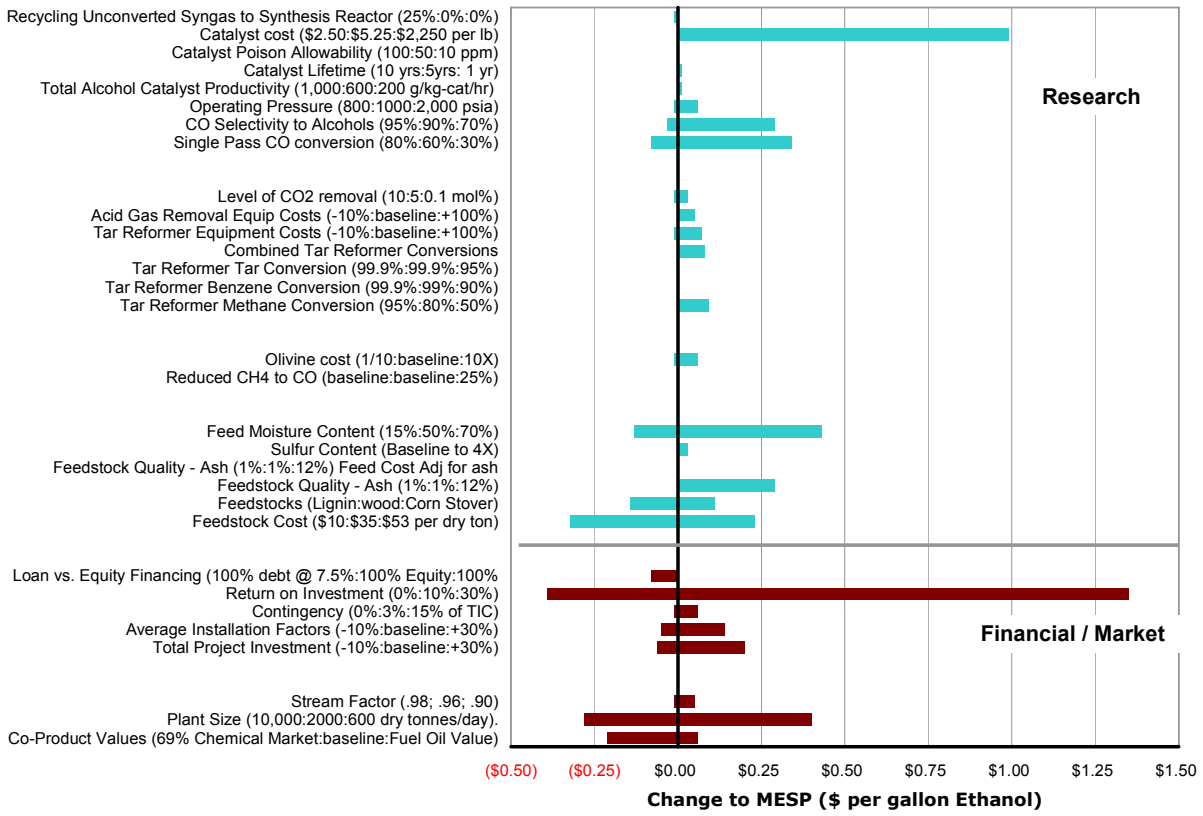

Figure 10. Results of sensitivity analyses

All analyses are discussed further in the following sections.

5.1. Financial Scenarios

These parameters have the greatest effect on the MESP but R&D has the smallest direct effect on them. In particular, the required ROI for the project could more than double the calculated MESP. Successful R&D and demonstration projects would, at best, ease the ROI requirements of corporations and/or lending institutions and reduce the required MESP toward the baseline case

in this report. Also, the baseline of 0% debt financing is not a very realistic scenario, but does represent the conservative endpoint. Many projects of this nature are often financed by some mixture of debt and equity financing. However, the magnitude of this parameter's effect on MESP is quite small in comparison to many of the other financial and market parameters.

A conceptual design like this is normally thought to give accuracy in the capital requirements of -10% to +30%. Using this range for the TPI (Total Project Investment) gives an MESP range of -6% to +20%.

5.2. Feedstocks

Because this process has been designed for utilization of forest resources there may be little control over the feedstock quality coming to the plant[i]. The two most important feedstock quality parameters that can most impact the process economics are moisture and ash content.

The high range of the ash content examined here are more indicative of agricultural residues (from fertilizer) or lignin-rich biochemical process residues; forest resources should have ash contents near that of this baseline case (about 1%). It was originally thought that the cost effects of high ash content could be damped by basing feedstock payments on a dry and ***ash-free*** basis, not just a dry basis. However, Figure 11 shows that this is not the case. Increased ash in the feedstock results in larger ash handling equipment and power requirements, especially in the electrostatic precipitator (ESP) used to remove ash fines from the flue gas. These higher power requirements are met by diverting more syngas to the fuel system to generate electricity. Keeping the feedstock cost constant on a moisture and ash free ("maf") basis decreases the MESP for high-ash feeds by reducing the cost per pound of biomass. However, at a constant mass feedrate to the process, there is inherently less carbon available for conversion to alcohols and therefore smaller revenues. The reduced revenues together with increased capital and operating costs result in an overall increase in MESP despite the lower feedstock cost.

The operating costs due to ash disposal may be reduced by finding an alternate use for the ash. One potential use may be as a soil amendment to replace minerals lost from the soil. The ash collected from gasification in this case should be comparable to the minerals removed from the soil during the plant growth. More study would be needed to determine the best and most economic method for using the ash as a soil amendment.

[i] At least less so than using agricultural residues or energy crops that can be bred for specific properties in these lignocellulosic materials.

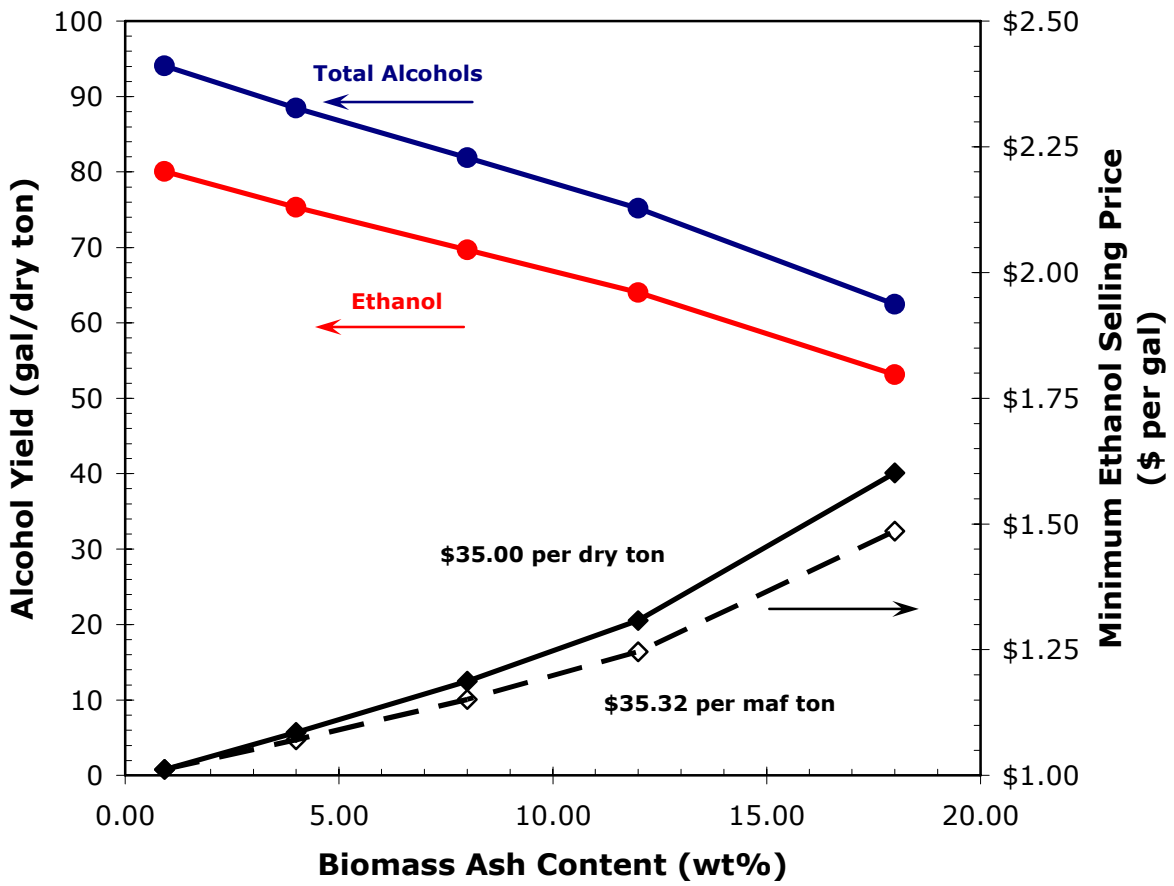

Figure 11. Sensitivity analysis of biomass ash content

The biomass feed's moisture content is a problem if it is higher than the baseline 50%. This is not envisioned as being very likely except in the case of processing wet ensiled agricultural residues or energy crops; however, these feedstocks are more envisioned to be processed by biochemical means, not thermochemical means. Drier feedstocks will have lower MESPs because of decreased heat requirements to dry the incoming feedstock directly relate to lower raw syngas diversion to heat and power and higher alcohol yields. This is depicted in Figure 12 and Figure 13. As the moisture content increases, the alcohol yield will decrease because more raw syngas must be diverted for heat. Note that very low moisture contents do not give corresponding increased alcohol yields; this is because flue gas is used for the drying and other operating specifications dictate the amount of raw syngas diverted for heat and power, not the feedstock drying.

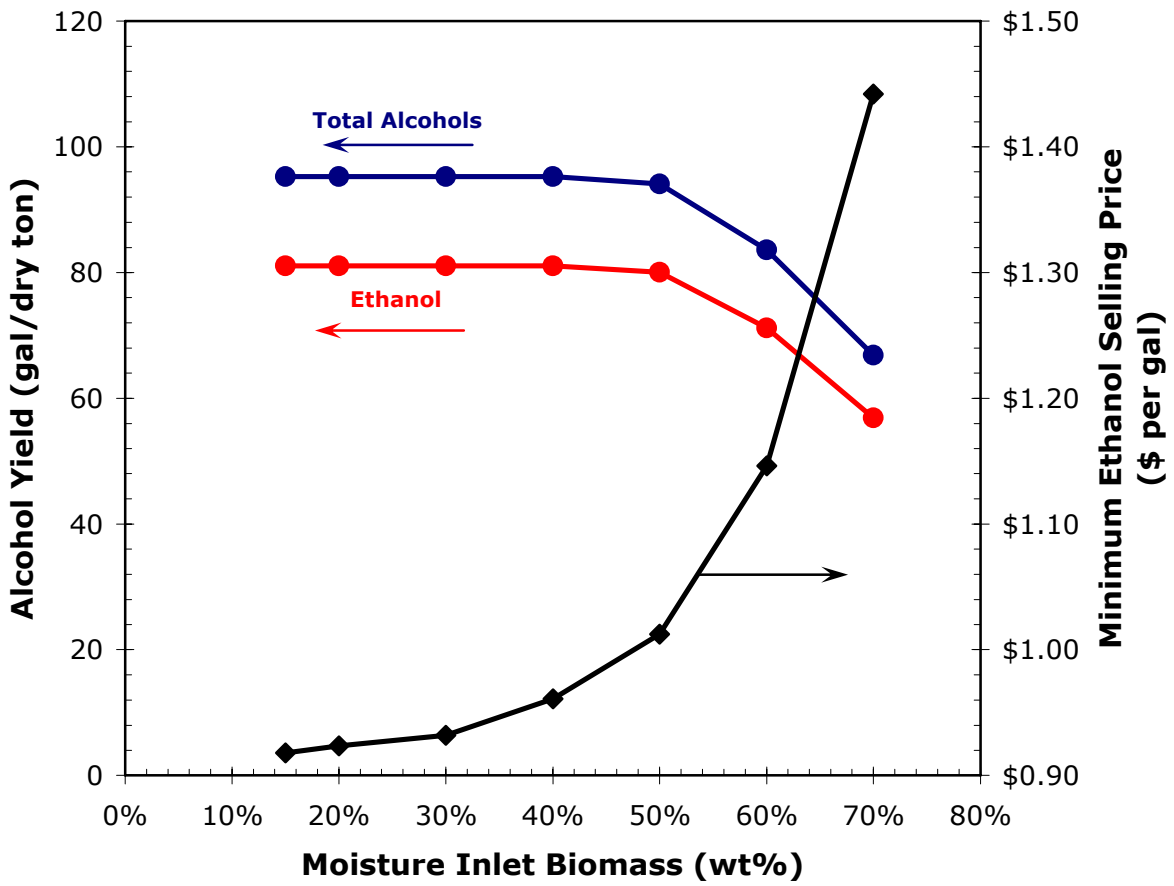

Figure 12. Sensitivity analysis of biomass moisture content

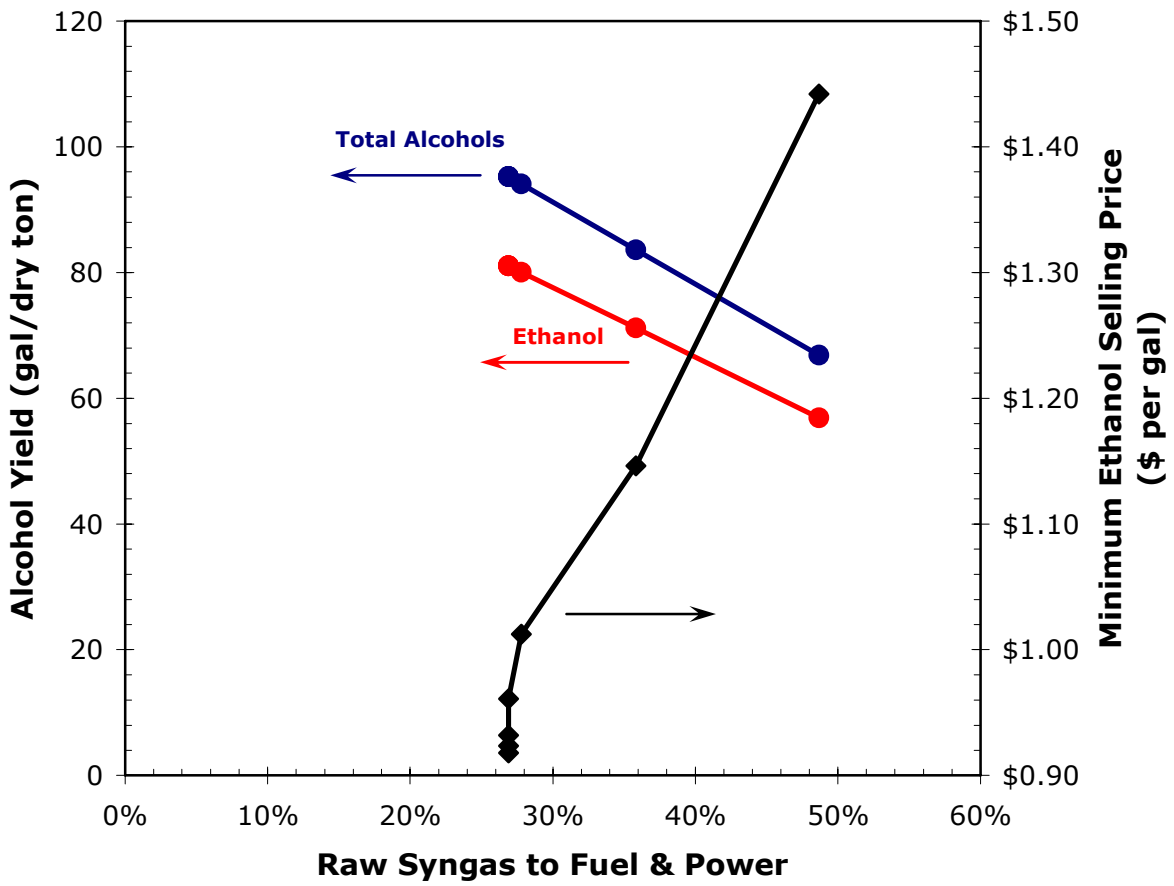

Figure 13. Sensitivity analysis of raw syngas diverted for heat and power due to biomass moisture content

Two combined scenarios were analyzed for two different kinds of feedstocks: corn stover and lignin-rich residues from a biochemical process. The compositions of both are consistent with the Aden et al. design report [3]. Corn stover gives rise to a higher MESP even though its elemental analysis is very similar to wood and its moisture content is very low. The overwhelming effect is due to its higher ash content. Lignin-rich residues have a much lower MESP. Lignin-rich residues also have the virtue of making more electricity than the process needs, so it is exported, even if the raw syngas to the fuel system is minimized while still achieving all other operating specifications. This is a very positive sign that incorporating a thermochemical conversion unit with a biochemical conversion unit and make the heat and power for the entire complex will be cost effective. The feed handling system may have to be different, however, since lignin tends to get very powdery when dried; direct contact with the flue gas for drying would very likely lead to high losses of the feedstock. Drying with indirect contact of the heating medium must be investigated.

5.3. Thermal Conversion

Two gasification scenarios were examined. The first was to explore the impact of increasing the olivine cost which could come about from catalytic modification. Increasing the olivine cost by an order of magnitude could increase the MESP by 6%. This is not significant. The second scenario examined the effect of reducing methane production in the gasifier to reflect a case where the gasifier does not operate within the given correlations. This gave an unexpected result. It was expected that the MESP would decrease when it actually increased a nearly insignificant amount (0.1%). There are two reasons for this. One is an artifact of the way in which the decrease was modeled – more CO was formed and the hydrogen that would have gone to the methane instead went to the char (and was lost for further processing). This required modifications to the operations to keep the H_2:CO ratio to the alcohol synthesis reactor above 1.0 and, in doing so, increased the MESP.

5.4. Clean-Up & Conditioning

These scenarios appeared to have an imperceptible effect on the MESP. However, this is misleading. The scenarios show primarily cost effects due to the material and energy balances. Since the amount of tar is small compared to the amount of CO and H2, these effects are small. In reality, Clean-Up and Conditioning is absolutely required for acceptable performance of gas compressors, waste water treatment, and alcohol synthesis catalysts. Excessive tars in the syngas would significantly impact compressors and waste water treatment with severe consequences to equipment and increased operating costs that are not rigorously modeled here. So, not meeting these targets would give poor performance, leading to greater cost effects than reflected by the sensitivity analysis for this area.

5.5. Fuels Synthesis

These scenarios show the importance of the R&D for the synthesis catalysts. Poor performance could increase MESP by 25% or more. Whether this is due to actual non-target catalyst formulations or due to poor performance in Clean-Up and Conditioning that leads to poor alcohol synthesis catalyst performance, the cost effects are major. The catalyst cost sensitivity range was extremely large, from $2.50/lb to over $2,250/lb. This was done to bracket a variety of potential catalyst systems, not just cobalt moly-sulfide. Exotic metals such as rhodium (Rh) or ruthenium (Ru) can add considerable cost to a catalyst system even at relatively low concentrations. At low catalyst costs, total CO conversion and alcohol selectivity (CO_2-free basis) have the largest impact on the overall MESP. The catalyst productivity (g/kg/hr) did not show much impact over the sensitivity range chosen. In reality, all of these catalyst performance indicators are tightly linked. It is unlikely that research could change one without affecting the others.

5.6. Markets

Crediting the co-product higher alcohols with the lower fuel oil value increases the MESP by about 6%; this is still reasonable to meet the qualitative “cost competitive” target. Of even more significance is that selling these higher alcohols for even 69% of their chemical market value will lead to a significant reduction of MESP (about 20%). This shows that the first couple thermochemical conversion plants could get a significant economic advantage in their early life by being able to do this.

6. Conclusions

This analysis shows that biomass-derived ethanol from a thermochemical conversion process has the possibility of being produced in a manner that is "cost competitive with corn-ethanol" by 2012. This thermochemical conversion process would make use of many sub-processes that are currently used commercially (such as acid gas removal) but also requires the successful demonstration of R&D targets being funded by the DOE's OBP.

This analysis has demonstrated that forest resources can be converted to ethanol in a cost competitive manner allowing greater flexibility in converting biomass resources to achieve stated volume targets by 2030.

7. Future Work

Future R&D work to develop and demonstrate reforming and synthesis catalysts is inherent in this study. There many other areas of demonstration and process development also required:

- Demonstrate gasifier performance on other feedstocks (agricultural residues such as corn stover, energy crops such as switchgrass, and lignin-rich residues that would be available from a co-located biochemical conversion process). Of particular importance for the lignin-rich residues is the impact on process performance of trace amounts of chemicals used in the biochemical processing that might negatively impact the thermochemical conversion process.

- Compare the relative merits of direct oxygen blown gasifiers to the indirect steam gasifier upon which this study is based.

- Examine the trade-offs of the greater use of water cooling (greater water losses in the cooling tower) vs. air cooling (greater power usage) vs. organic Rankine cycle for cooling and power production.

- Better understand the trade offs between operating conditions in the alcohol synthesis reactor to operating conditions (pressure, temperature, extent of reaction, extent of methanol recycle). A "tuned" kinetics based model would be required for this.

- Explore alternate synthesis reactor configurations (slurry phase vs. fixed bed).

- Understand trade offs between an energy neutral, alcohol production facility to one that could also supply heat and electricity to a co-located biochemical conversion facility.

- Further explore the potential benefits of integrating biochemical and thermochemical technologies.

- Examine potential for decreased heat integration complexity and increased overall energy efficiency.

- Better understand the kinetics of catalytic tar reforming and deactivation, and the necessary regeneration kinetics to achieve a sustainable tar reforming process.

- Examine the emissions profile from the plant and explore alternate emissions control equipment.

8. References

1 2006 State of the Union address, January 31, 2006. http://www.whitehouse.gov/stateoftheunion/2006/

2 http://www.whitehouse.gov/news/releases/2006/01/20060131-6.html

3 Aden, A.; Ruth, M.; Ibsen, K.; Jechura, J.; Neeves, K.; Sheehan, J.; Wallace, B.; Montague, L.; Slayton, A.; Lukas, J. *Lignocellulosic Biomass to Ethanol Process Design and Economics Utilizing Co-Current Dilute Acid Prehydrolysis and Enzymatic Hydrolysis for Corn Stover*. NREL Report No. TP-510-32438. June 2002. http://www.nrel.gov/docs/fy02osti/32438.pdf

4 CEH Marketing Research Report - Ethyl Alcohol, *Chemical Economics Handbook — SRI International*, pp 50-51. 2002

5 Wooley, R.; Ruth, M.; Sheehan, J.; Ibsen, K. *Lignocellulosic Biomass to Ethanol Process Design and Economics Utilizing Co-Current Dilute Acid Prehydrolysis and Enzymatic Hydrolysis Current and Futuristic Scenarios*, NREL report TP-580-26157, July 1999. http://devafdc.nrel.gov/pdfs/3957.pdf

6Perlack, R.D.; Wright, L.L.; Turhollow, A.F.; Graham, R.L.; Stokes, B.J.; Erbach, D.C. *Biomass as Feedstock for a Bioenergy and Bioproducts Industry: the Technical Feasibility of a Billion-Ton Annual Supply*. A joint U.S. Department of Energy and U.S. Department of Agriculture report. DOE/GO-102995-2135 & ORNL/TM-2005/66. April 2005. http://www1.eere.energy.gov/biomass/pdfs/final_billionton_vision_report2.pdf

7 Aden, A.; Spath, P.; Atherton, B. *The Potential of Thermochemical Ethanol Via Mixed Alcohols Production*. NREL Milestone Report. September 30, 2005. http://devafdc.nrel.gov/bcfcdoc/9432.pdf

8 Bain, R.L. *The Role of Thermochemical Processing in an Integrated Sugars/Thermochemical Biorefinery: Conceptual Process Technoeconomic Analysis*. NREL Technical Memo, February 9, 2005. http://devafdc.nrel.gov/bcfcdoc/8967.pdf

9 Spath, P.; Aden, A.; Eggeman, T.; Ringer, M.; Wallace, B.; Jechura, J. *Biomass to Hydrogen Production Detailed Design and Economics Utilizing the Battelle Columbus Laboratory Indirectly-Heated Gasifier*. NREL Report No. Number NREL/TP-510-37408. May 30, 2005. http://www.nrel.gov/docs/fy05osti/37408.pdf

10 http://engineering.dartmouth.edu/rbaef/ Final report under development.

11 Larson, E.D.; Jin, H.; Celika, F.E. "Large-Scale Gasification-Based Co-Production of Fuels and Electricity from Switchgrass." Draft manuscript for *Biomass & Bioenergy*. March 2006.

12 E.D. Larson, G.W. McDonald, W. Yang, W.J. Frederick, K. Iisa, T.G. Kreutz, E.W. Malcom, and C.A. Brown, "A Cost-Benefit Assessment of Black Liquor Gasifier/Combined Cycle Technology Integrated into a Kraft Pulp Mill," Tappi Journal, 83(6): 57-, June 2000.

13 Bain, R. L., K. R. Craig and R. P. Overend (2000). "Gasification for Heat and Power, Methanol, and Hydrogen," Chapter 9.2 of Industrial Uses of Biomass Energy, ed. F. Rosillo-Calle, et al., Taylor and France, London, UK, ISBN-0-7484-0884-3.

14 Wyman, C.E., R. L. Bain, N.D. Hinman, and D.J. Stevens, (1993) "Ethanol and Methanol from Cellulosic Materials, "Chapter 21 of Renewable Energy: Sources for Fuels and Electricity, ed T.B. Johansson, et al, Island Press.

15 Chem Systems "Assessment of Costs and Benefits of Flexible and Alternative Fuel Use in the U.S. Transportation Sector", by Chem Systems, Tarrytown, NY, for the U.S. Department of Energy, Washington, D.C., Report No. DOE/PE--0093, 46 pp, November 1989.

16 Feldmann, H.F., Paisley, M.A., Appelbaum, H.R., and D.R. Taylor, "Conversion of Forest Residues to a Methane-Rich Gas in a High- Throughput Gasifier", prepared by Battelle Columbus Division, Columbus, Ohio, for the Pacific Northwest Laboratory, Richland, WA, PNL Report no. PNL-6570, May 1988.

17 Wan, E. I. and M. D. Fraser, "Economic Assessment of Advanced Biomass Gasification Systems", by Science Applications International Corporation, McLean, VA, IGT Biomass Conference, New Orleans, LA, Feb 1989.

18 Wyman, C.E., R. L. Bain, N.D. Hinman, and D.J. Stevens, (1993) "Ethanol and Methanol from Cellulosic Materials, "Chapter 21 of Renewable Energy: Sources for Fuels and Electricity, ed T.B. Johansson, et al, Island Press.

19 Hamelinck, C. N. and A. P. C. Faaij (2001). "Future Prospects for Production of Methanol and Hydrogen from Biomass," Utrecht University, Utrecht, the Netherlands, Report No. NWS-E-2001-49, ISBN-90-73958-84-9

20 Williams, R. H., E. D. Larson, R. E. Katofsky, and J. Chen (1995). "Methanol and Hydrogen from Biomass for Transportation, with Comparisons to Methanol and Hydrogen from Natural Gas and Coal," PU/CEES Report No. 292, Princeton University, Princeton, NJ, July.

21 Nexant Inc. *Equipment Design and Cost Estimation for Small Modular Biomass Systems, Synthesis Gas Cleanup, and Oxygen Separation Equipment, Task 1: Cost Estimates of Small Modular Systems*. Subcontract Report NREL/SR-510-39943. May 2006. http://www.nrel.gov/docs/fy06osti/39943.pdf

22 Nexant Inc. *Equipment Design and Cost Estimation for Small Modular Biomass Systems, Synthesis Gas Cleanup, and Oxygen Separation Equipment ,Task 2: Gas Cleanup Design and Cost Estimates – Wood Feedstock*. Subcontract Report NREL/SR-510-39945. May 2006. http://www.nrel.gov/docs/fy06osti/39945.pdf

23 Nexant Inc. *Equipment Design and Cost Estimation for Small Modular Biomass Systems, Synthesis Gas Cleanup, and Oxygen Separation Equipment, Task 2.3: Sulfur Primer*. Subcontract Report NREL/SR-510-39946 May 2006. http://www.nrel.gov/docs/fy06osti/39946.pdf

24 Nexant Inc. *Equipment Design and Cost Estimation for Small Modular Biomass Systems, Synthesis Gas Cleanup, and Oxygen Separation Equipment, Task 9: Mixed Alcohols From Syngas — State of Technology*. Subcontract Report NREL/SR-510-39947 May 2006. http://www.nrel.gov/docs/fy06osti/39947.pdf

25 Garrett, D.E., *Chemical Engineering Economics*, Van Nostrand Reinhold, New York, 1989.

26 Peters, M.S.; K.D. Timmerhaus. *Plant Design and Economics for Chemical Engineers*, 5th Edition, McGraw-Hill, Inc., New York. 2003.

27 Perry, R.H., Green, D.W., Maloney, J.O. *Perry's Chemical Engineers' Handbook*, 7th ed., McGraw-Hill. 1997

28 October 2006 values used from http://www.che.com/inc/CEeconomicIndicators.php.

29 Craig, K.R.; Mann, M.K. *Cost and Performance Analysis of Biomass-Based Integrated Gasification Combined-Cycle (BIGCC) Power Systems*, NREL Report No. NREL/TP-430-21657. October 1996. http://www.nrel.gov/docs/legosti/fy97/21657.pdf

30 Foust, T.; et al., *A National Laboratory Market and Technology Assessment of the 30x30 Scenario*. Draft in progress, 2007, DOE Report.

31 Mann, M.K.; Spath, P.L. *Life Cycle Assessment of a Biomass Gasification Combined-Cycle Power System*. National Renewable Energy Laboratory, Golden, CO, TP-430-23076. 1997. http://www.nrel.gov/docs/legosti/fy98/23076.pdf

32 Phillips, S.; Carpenter, D.; Dayton, D.; Feik, C.; French, R.; Ratcliff, M.; Hansen, R.; Deutch, S.; and Michener, B. (2004). *Preliminary Report on the Performance of Full Stream Tar Reformer*. Internal NREL Milestone report.

33 Nexant Inc. *Equipment Design and Cost Estimation for Small Modular Biomass Systems, Synthesis Gas Cleanup, and Oxygen Separation Equipment ,Task 2: Gas Cleanup Design and Cost Estimates – Wood Feedstock*. Subcontract Report NREL/SR-510-39945. May 2006. http://www.nrel.gov/docs/fy06osti/39945.pdf

34 Gas Processors Suppliers Association. *Engineering Data Book*, FPS Version, 12th ed., Tulsa, OK. 2004

35 A Claus unit for reducing sulfur was briefly considered as an alternative to LO-CAT, however the size of the stream and H_2S concentration made this a fairly impractical choice.

36 Nexant, Inc. *Equipment Design and Cost Estimation for Small Modular Biomass Systems, Synthesis Gas Cleanup, and Oxygen Separation Equipment. Task 9: Mixed Alcohols from Syngas – State of Technology.* NREL/SR-510-39947. Performed by Nexant Inc., San Fransisco, CA. Golden, CO: National Renewable Energy Laboratory, May 2006. http://www.nrel.gov/docs/fy06osti/39947.pdf

37 Herman, R.G. (1991). "Chapter 7 – Classical and Non-classical Routes for Alcohol Synthesis." New Trends in CO Activation, L. Guczi, ed., Elsevier, New York, pp 265-349.

38 Consult Appendix J for specific literature experiment.

39 Personal communication between Yves Parent at NREL and CRITERION (Houston, TX) on Friday, April 13, 2006.

40 Email correspondence between David Dayton, NREL, and Mark Jones, Dow Chemical. January 19, 2007.

41 Forzatti, P., Tronconi, E., and Pasquon, I. (1991). "Higher Alcohol Synthesis." *Catalysis Reviews – Science and Engineering,* 33(1-2), pp109-168.

42 Hamelinck, C.; et al. *Production of FT Transportation Fuels from Biomass; Technical Options, Process Analysis, and Optimisation, and Development Potential.* Utrecht University, Copernicus Institute. March 2003. ISBN 90-393-3342-4.

43 Quarderer, G.J. "Mixed Alcohols from Synthesis Gas." *Proceedings from the 78th Spring National AIChE Meeting.* April 6-10, 1986, New Orleans, LA.

44 Nirula, S. "Dow / Union Carbide Process for Mixed Alcohols from Syngas" SRI International. March 1986. PEP Review No 85-1-4. Menlo Park, CA.

45 Park, T.; et al.; "Kinetic Analysis of Mixed Alcohol Synthesis from Syngas over K/MoS_2 Catalyst." *Ind. Eng. Chem. Res.* Vol 36, 1997. pp 5246 – 5257.

46 Gunturu, A.; et al. "A Kinetic Model for the Synthesis of High-Molecular-Weight Alcohols over a Sulfided Co-K-Mo/C Catalyst." *Ind. Eng. Chem. Res.* Vol. 37, 1998. pp. 2107 – 2115.

47 Smith, K.; et al. "Kinetic Modeling of Higher Alcohol Synthesis over Alkali-Promoted Cu/ZnO and MoS2 Catalysts." *Chemical Engineering Science*, Vol. 45. 1990. pp. 2639 – 2646.

48 Gas Processors Suppliers Association. *Engineering Data Book*, FPS Version, 12th ed., Tulsa, OK. 2004

49 Weast, R.C., ed. *CRC Handbook of Chemistry and Physics*, 62nd ed., CRC Press, Boca Raton, FL. 1981

50 Aden, et .al. "Lignocellulosic Biomass to Ethanol Process Design and Economics Utilizing Co-Current Dilute Acid Prehydrolysis and Enzymatic Hydrolysis for Corn Stover", NREL/TP-510-32438, June 2002.

51 Keeney, D.; et al. "Water Use by Ethanol Plants Potential Challenges". Institute for Agriculture and Trade Policy, Minneapolis, MN. October 2006. http://www.iatp.org/iatp/publications.cfm?accountID=258&refID=89449

52 Peters, M.S.; K.D. Timmerhaus. *Plant Design and Economics for Chemical Engineers*, 5th Edition, McGraw-Hill, Inc., New York. 2003.

53 Breault, R.; Morgan, D. *Design and Economics of Electricity Production Form An Indirectly-heated Biomass Gasifier.* Report TR4533-049-92. Columbus, Ohio: Battelle Columbus Laboratory. 1992.

54 Dravo Engineering Companies. Gasification Capital Cost Estimation. Obtained from Mark Paisley, August, 1994. Battelle Columbus Laboratory. 1987.

55 Weyerhaeuser, Nexant, and Stone & Webster. *Biomass Gasification Combined Cycle*. Weyerhaeuser Company, Tacoma, WA . DOE DE-FC36-96GO10173. 2000.

56 Stone & Webster; Weyerhaeuser; Amoco; and Carolina Power & Light. *New Bern Biomass to Energy Project Phase 1 Feasibility Study*. Response to NREL Contract No. LOI No. RCA-3-13326. NREL Report No. TP-421-7942. June 1995.

57 Wan, E. I. and Malcolm D. F. "Economic Assessment of Advanced Biomass Gasification Systems," in *Energy from Biomass and Wastes XIII*, Donald L. Klass, ed. Chicago: Institute of Gas Technology, pp.791-827. 1990.

58 Weyerhaeuser. Gasification Capital Cost Estimation. Obtained from Mark Paisley, August, 1994. Battelle Columbus Laboratory. 1992.

59 Wright, J.; Feinberg, D. *A Comparison of the Production of Methanol and Ethanol from Biomass*. For the International Energy Agency. Contract no. 23218-1-9201/01-SQ. 1993.

60 Craig, K. Electric Power Generation Cost - Version 1.11 spreadsheet from Kevin Craig. July 6, 1994.

61 Fogler, H.S. *Elements of Chemical Reaction Engineering*. Second Edition. Prentice Hall. Englewood Cliffs, New Jersey. 1992.

62 Kohl, A.L.; Nielsen, R.B. *Gas Purification*, 5th Edition. Gulf Publishing Company. 1997

63 Walas, S.M. *Chemical Process Equipment Selection and Design*. Butterworth-Heinemann. 1988.

64 Leiby, S.M. (1994) *Operations for Refinery Hydrogen.* SRI Report No. 212. Menlo Park, CA.

65 Jeakel, D. (2004). Price quote from AGSCO for super sacks or bulk.

66 *Chemical Marketing Reporter*. (2004). August 23-30 issues.

67 Chem Systems. (1994). Biomass *to Ethanol Process Evaluation*. Prepared for NREL. Tarrytown, New York.

68 Energy Information Agency (EIA). 2003. http://www.eia.doe.gov/pub/oil_gas/petroleum/data_publications/petroleum_marketing_monthly/current/pdf/pmmtab16.pdf.

69 Graubard, D. Personal correspondence. Gas Technology Products LLC. Schaumburg, IL. 2004

70 East Bay municipal utility district. 2004. http://www.ebmud.com/wastewater/industrial_&_commercial_permits_&_fees/wastewater_rates/default.htm#non-residential%20rates

71 SRI International. (2003). *PEP Yearbook International*. Volume 1E. United States. Menlo Park, CA.

72 Baker, Thomsen Associates Insurance Services Inc. (BTA), *Salary Expert ePro©, www.salaryexpert.com, 2004.*

73 Based on historical wholesale prices found on the Energy Information Agency web site, http://www.eia.doe.gov/oil_gas/petroleum/info_glance/petroleum.html

Appendix A

List of Acronyms

ASME	American Society of Mechanical Engineers
BCL	Battelle Columbus Laboratory
BFW	Boiler Feed Water
bpd	Barrels per Day
BTU	British Thermal Unit
CFM	Cubic Feet per Minute
CH_4	Methane
CIP	Clean-in-place
CO	Carbon Monoxide
Co	Cobalt
CO_2	Carbon Dioxide
DCFROR	Discounted Cash Flow Rate of Return
DOE	US. Department of Energy
EIA	Energy Information Administration
EtOH	Ethanol
FT	Fischer-Tropsch
FY	Fiscal Year
GHSV	Gas Hourly Space Velocity
GJ	GigaJoule
gpm	Gallons per minute
H_2	Hydrogen
HAS	Higher Alcohol Synthesis
HHV	Higher Heating Value
IFP	Institut Francais du Petrole
IRR	Internal Rate of Return
kWh	Kilowatt-hour
LHV	Lower Heating Value
MA	Mixed Alcohols
MASP	Minimum alcohols selling price
MeOH	Methanol
MESP	Minimum ethanol selling price
MoS_2	Molybdenum disulfide
MTBE	Methyl-tertiary-butyl Ether
MW	Megawatts
NREL	National Renewable Energy Laboratory
NRTL	Non-Random Two Liquid activity coefficient method
OBP	Office of the Biomass Program
PFD	Process flow diagram
PEFI	Power Energy Fuels, Inc.
PNNL	Pacific Northwest National Laboratory
PPMV	Parts per million by volume
psia	Pounds per square inch (absolute)
RKS-BM	Redlich-Kwong-Soave equation of state with Boston-Mathius modifications
SEHT	Snamprogetti, Enichem and Haldor Topsoe
SMR	Steam Methane Reformer
TC EtOH	Thermochemical Ethanol
tpd	Short Tons per Day
TPI	Total Project Investment
UCC	Union Carbide Corp.
WGS	Water Gas Shift
WRI	Western Research Institute
WWT	Wastewater Treatment

Appendix B

OBP Thermochemical Platform Research Targets

Background/Introduction

Thermochemical conversion technology options include both gasification and pyrolysis. Thermochemical conversion is envisioned to be important in enabling lignocellulosic biorefineries and to maximize biomass resource utilization for the production of biofuels. Moving forward, the role of thermochemical conversion is to provide a technology option for improving the economic viability of the developing bioenergy industry by converting the fraction of the biomass resources that are not amenable to biochemical conversion technologies into liquid transportation fuels. The thermochemical route to ethanol is synergistic with the biochemical conversion route. A thermochemical process can more easily convert low-carbohydrate or "non-fermentable" biomass materials such as forest and wood residues to alcohol fuels, which adds technology robustness to efforts to achieve the 30 x 30 goal (Foust, et al., 2006). This Appendix describes the R&D needed to achieve the market target production price in 2012 for a stand-alone biomass gasification/mixed alcohol process. Future advanced technology scenarios rely on considerable biofuel yield enhancements achieved by combining biochemical and thermochemical conversion technologies into an integrated biorefinery that implements mixed alcohol production from gasification of lignin-rich bioconversion residues to maximize the liquid fuel yield per delivered ton of biomass.

Biomass gasification can convert a heterogeneous supply of biomass feedstock into a consistent gaseous intermediate that can then be reliably converted to liquid fuels. The biomass gasification product gas ("synthesis gas" or simply "syngas") has a low to medium energy content (depending on the gasifying agent) and consists mainly of CO, H_2, CO_2, H_2O, N_2, and hydrocarbons. Minor components of the syngas include tars, sulfur and nitrogen oxides, alkali metals, and particulates. These minor components of the syngas potentially threaten the successful application of downstream syngas conversion steps.

Commercially available and near-commercial syngas conversion processes were evaluated on technological, environmental, and economic bases (Spath and Dayton, 2003). This design report provides the basis for identifying promising, cost-effective fuel synthesis technologies that maximize the impact of biomass gasification for transforming biomass resources into clean, affordable, and domestically produced biofuels. For the purpose of this report the pre-commercial mixed alcohols synthesis process implementing an alkali promoted MoS_2 catalyst, a variant of Fischer-Tropsch synthesis, was selected as the conversion technology of choice because high yields of ethanol are possible with targeted R&D technology advancements. The MoS_2 catalyst is also tolerant of low levels of sulfur gases that are common catalyst poisons. The proposed mixed alcohol process does not produce ethanol with 100% selectivity. Production of higher normal alcohols (e.g., n-propanol, n-butanol, and n-pentanol) is unavoidable. Fortunately, these by-product higher alcohols have value as commodity chemicals, fuel additives, or potentially fuels in their own right.

The schedule for meeting specific research goals for improved tar reforming and mixed alcohol synthesis catalyst performance was accelerated by the President's Advanced Energy Initiative to achieve cost-competitive cellulosic ethanol by 2012. This design report provides a rigorous engineering analysis to provide a baseline technology scenario for doing this. The conceptual process design and ethanol production cost estimate quantify the benefits of meeting the R&D

goals for tar reforming and improved mixed alcohol catalyst performance helps establish technical R&D targets that need to be overcome by a concerted and directed core research effort.

Process Description

Figure 1 shows a block process flow diagram of the cost-competitive target process and the major technical barriers that need to be addressed to accomplish this target case. The feedstock interface addresses the main biomass fuel properties that impact the long-term technical and economic success of a thermochemical conversion process: moisture content, fixed carbon and volatiles content, impurity (sulfur, nitrogen, chlorine) concentrations, and ash content. High moisture and ash contents reduce the usable fraction of delivered biomass fuels proportionally. Therefore, maximum system efficiencies should be possible with dry, low ash biomass fuels.

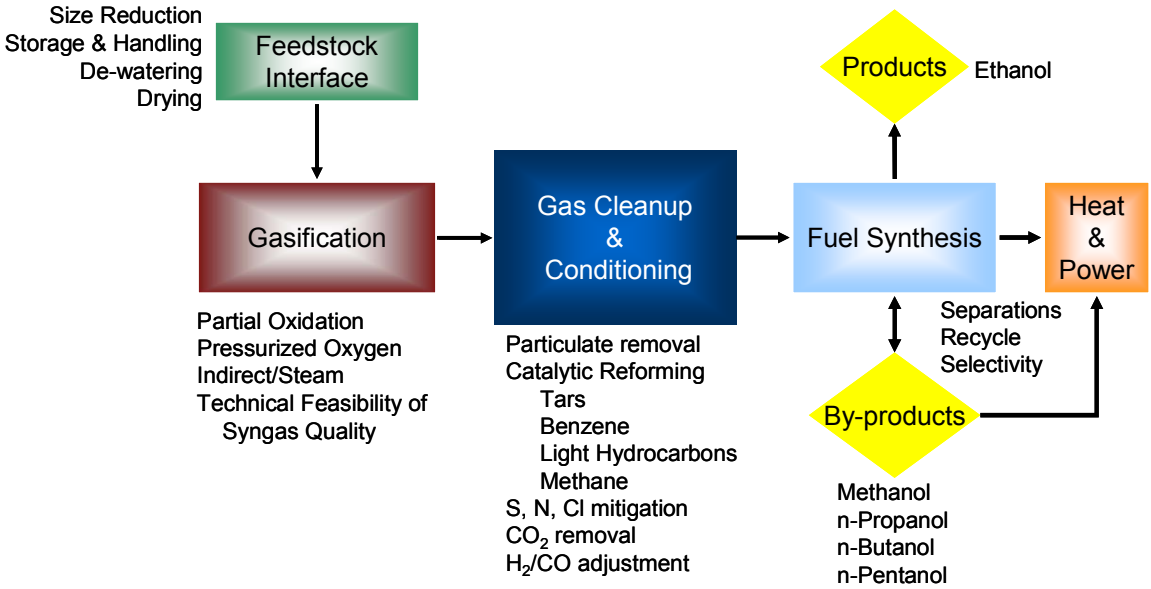

Figure 1. Process flow diagram with research barriers for cost-competitive thermochemical ethanol production

Biomass gasification is a complex thermochemical process that begins with the thermal decomposition of a lignocellulosic fuel followed by partial oxidation of the fuel with a gasifying agent, usually air, oxygen, or steam to yield a raw syngas. The raw gas composition and quality are dependent on a wide range of factors including feedstock composition, type of gasification reactor, gasification agents, stoichiometry, temperature, pressure, and the presence or lack of catalysts.

Gas cleanup is a general term for removing the unwanted impurities from biomass gasification product gas and generally involves an integrated, multi-step approach that depends on the end use of the product gas. This entails removing or eliminating tars, acid gas removal, ammonia scrubbing, alkali metal capture, and particulate removal. Gas conditioning refers to final modifications to the gas composition that makes it suitable for use in a fuel synthesis process. Typical gas conditioning steps include sulfur polishing to remove trace levels of remaining H_2S and water-gas shift to adjust the final H_2:CO ratio for optimized fuel synthesis.

Comprehensive cleanup and conditioning of the raw biomass gasification product gas yields a "clean" syngas comprised of essentially CO and H_2, in a given ratio that can converted to a mixed alcohol product. Separation of ethanol from this product yields a methanol-rich stream that can be recycled with unconverted syngas to improve process yield. The higher alcohol-rich stream yields by-product chemical alcohols. The fuel synthesis step is exothermic so heat recovery is essential to maximize process efficiency.

R&D Needs To Achieve the 2012 Technical Target for Thermochemical Ethanol

Essential R&D activities from 2007 through 2011 to overcome identified technical barrier areas to meet the established 2012 technical target for thermochemical ethanol production are outlined in Table 1. The rigorous engineering analysis of the thermochemical ethanol process conducted in this study will help to validate the feasibility of these technical targets and provide focus for the technical barriers that provide the largest economic benefit. These R&D activities include fundamental kinetic measurements, micro-activity catalyst testing, bench-scale thermochemical conversion studies, pilot-scale validation of tar reforming catalyst performance, mixed alcohol catalyst development, and pilot-scale demonstration of integrated biomass gasification mixed alcohol synthesis. Process data collected in the integrated pilot-scale testing will provide the basis for process optimization and cost estimates that will guide deployment of the technology.

Table 1. Thermochemical Ethanol (Gasification/Mixed Alcohols) R&D Targets to meet the 2012 Cost-Competitive Thermochemical Ethanol Cost Target

R&D Area	Current	2007	2008	2009	2010	2011	2012
Feedstock Interface	$30/dry ton wood chips 50% moisture dried to 12% - 2000 tpd plant					$30/dry ton biorefinery residues based on $45/dry ton corn stover. 50% moisture dried to 12% - 2000 tpd plant	
Thermochemical Conversion - Gasification	Wood chips (model) - Indirect (atm) gasification – 78% syngas efficiency: H_2/CO = 1.0-1.5 $CH_4 \leq 15$vol% Tars ≤ 30 g/Nm^3 benzene ≤ 1vol% H_2S = 50-600 ppm NH_3 and HCl to be determined	Biorefinery residues - Indirect (atm) gasification : corn stover; switchgrass; wheat straw; lignin - 78% syngas efficiency: H_2/CO = 1.0-1.5 $CH_4 \leq 15$vol% Tars ≤ 30 g/Nm^3; benzene ≤ 1vol% H_2S = 50-600 ppm NH_3 and HCl to be determined	Demonstrate biomass gasification for $6.88/MMBtu syngas cost based on 2007	Indirect (atm) gasification – 78% syngas efficiency: H_2/CO = 1.0-1.5 $CH_4 \leq 8$vol% Tars ≤ 10 g/Nm^3; benzene ≤ 0.1vol%; $H_2S \leq 20$ ppm; NH_3 and HCl to be determined	Demonstrate biomass gasification for $5.25/MMBtu syngas cost	Indirect (atm) catalytic gasification – 78% syngas efficiency: H_2/CO = 1.0 $CH_4 \leq 5$vol% Tars ≤ 1 g/Nm^3; benzene ≤ 0.04 vol%; $H_2S \leq 20$ ppm; NH_3 and HCl to be determined	
Cleanup and Conditioning	Cyclone particulate removal $H_2S \geq 50$ ppm (based on feedstock) with no S removal Tar Reformer Efficiency $CH_4 \geq 20\%$ Benzene ≥70% heavy tars ≥95% (79% CH_4 conversion in separate SMR)	Sorbent injection to maintain H_2S levels ≤ 50 ppm for syngas from biomass to reduce sulfur deactivation of tar reforming catalysts.	Tar Reformer Efficiency $CH_4 \geq 50\%$ Benzene ≥90% heavy tars ≥97% (79% CH_4 conversion in separate SMR)	Improve tar reforming catalyst performance - Regen/TOS ratio ≤ 600	Tar Reformer Efficiency $CH_4 \geq 80\%$ Benzene ≥99% heavy tars ≥99.9% Eliminate SMR; highest activity re-gained by regenerating deactivated catalyst	Improve tar reforming catalyst performance - Regen/TOS ratio ≤ 250	Integrated operations for syngas cleanup and conditioning target composition for fuel; synthesis: $CH_4 \leq 3$vol% Benzene ≤10 ppm Heavy tars ≤0.1 g/Nm^3 $H_2S \leq 1$ ppm $NH_3 \leq 10$ ppm HCl ≤ 10 ppb
Catalytic Fuels Synthesis (Mixed Alcohols)	H_2/CO = 1.2 Pressure ≤ 2000 psia Productivity = 100-400 gMA/kg(cat)/hr EtOH Selectivity ≥70% (CO_2-free)	$H_2/CO \leq 1.2$ Pressure ≤ 2000 psia Productivity ≥ 150 gMA/kg(cat)/hr EtOH Selectivity ≥70% (CO_2-free)	Demonstrate 500 hours catalyst lifetime at 2007 performance with bottled syngas for mixed alcohol catalyst cost of ≤ $0.50/gal EtOH	$H_2/CO \leq 1.0$ Pressure ≤ 1500 psia Productivity ≥ 300 gMA/kg(cat)/hr EtOH Selectivity ≥75% (CO_2-free)	Demonstrate 500 hours catalyst lifetime at 2009 performance. with biomass syngas for mixed alcohol catalyst cost of ≤ $0.22/gal EtOH	$H_2/CO \leq 1.0$ Pressure ≤ 1000 psia Productivity ≥ 600 gMA/kg(cat)/hr EtOH Selectivity ≥80% (CO_2-free)	Demonstrate 1000 hours catalyst lifetime at 2009 performance. with biomass syngas
Integration and Modeling	Research state-of-technology - 56 gal/dry ton EtOH $2.02/gal minimum EtOH selling price (higher alcohols sold at 85% of market value) at $2.71/gal installed capital costs.	Biomass Gasification/Mixed Alcohol Design Report - Establishes a cost and quality baseline for technology improvements for $1.07/gal thermochemical ethanol by 2012 from indirect biomass gasification through a clean syngas intermediate.	Improved hydrocarbon conversion efficiency yields- 56 gal/dry ton EtOH $1.73/gal minimum EtOH selling price (higher alcohols priced as gasoline on an energy adjusted basis - $1.15/gal) at $2.69/gal installed capital costs.	Validated $1.73/gal EtOH for integrated Cleanup & Conditioning + Mixed Alcohol synthesis	Demonstrate feasibility of system (8000 hr on stream with ≤10% catalyst losses per year) based on regenerating fluidizable tar reforming catalyst to eliminate SMR	Validated $1.35/gal EtOH for integrated Cleanup & Condtioning + Mixed Alcohol synthesis	Demonstrate mixed alcohol yields of 89 gal/ton (76 gal/dry ton EtOH) via indirect biomass gasification at pilot-scale for "$1.07" minimum ETOH selling price (higher alcohols priced as gasoline on an energy adjusted basis - $1.15/gal). Total installed capital costs are $2.31/annual gallon of ethanol.

Feedstock Interface

Feedstock handling, processing, and feeding specifically related to the thermochemical conversion process will need to be addressed. Because the 30 x 30 scenario envisions mixed alcohol conversion for low-grade or "non-fermentable" feedstocks, refinements in dry biomass feeder systems for use with gasification will be required to meet cost targets. These refinements should reduce upfront feed processing requirements to yield biomass feedstocks at $35 per ton delivered to the thermochemical process. Additional challenges will be associated with feeding the delivered biomass into developing pressurized biomass gasification systems. In all cases, demonstrating biomass feed systems beyond the pilot-scale will be necessary but this is not a significant component of the proposed research portfolio.

Fundamental Gasification Studies R&D Needs

The thermochemical mixed alcohol synthesis conversion route is envisioned initially for forest thinnings and other predominately woody feedstocks and residues. Hence, gasification studies will need to be performed to determine how feedstock composition affects syngas composition and quality and syngas efficiency. The gasifier technology chosen for the basis of this analysis is the Battelle Columbus Laboratory indirectly heated gasifier. Other gasifier technologies are under development that could prove more promising. These technologies will need to be tracked to ascertain their applicability to the mixed alcohol synthesis process.

Tar Cleanup and Conditioning R&D Needs

Previous techno-economic analyses (Aden and Spath, 2005) have shown that achieving the research goals for cleanup and conditioning of biomass-derived syngas to remove chemical contaminants such as tar, ammonia, chlorine, sulfur, alkali metals, and particulates has the greatest impact on reducing the cost of mixed alcohol synthesis. To date, gas cleanup and conditioning technologies and systems are unproven in integrated biorefinery applications. The goal of this research is to eliminate the tar removal and disposal via water quench, which is problematic both from efficiency and waste disposal perspectives, and develop a consolidated tar and light hydrocarbon reforming case.

The current lab-scale demonstration results and target conversions for various impurities measured in biomass-derived syngas are listed in Table 2 for the year 2005 "current" state of technology case and the year 2012 "goal" case. The goal case conversions were selected to yield an economically viable clean syngas that is suitable for use in a catalytic fuel synthesis process without further hydrocarbon conversion steps.

Table 2. Tar Reformer Performance – % Conversion

Compound	Current (2005)	Goal (2012)
Methane (CH_4)	20%	80%
Ethane (C_2H_6)	90%	99%
Ethylene (C_2H_4)	50%	90%
Tars (C_{10}+)	95%	99.9%
Benzene (C_6H_6)	70%	99%
Ammonia (NH_3)	70%	90%

The research target will be met when tar and light hydrocarbons are sufficiently converted to additional syngas, technically validating the elimination of a downstream steam methane reforming unit operation to separately reform methane from the other light hydrocarbons. Specific research to generate the required chemical and engineering data to design and successfully demonstrate a regenerating tar reforming reactor for long-term, reliable gas cleanup and conditioning includes:

- Performing tar deactivation/regeneration cycle tests to determine activity profiles to maintain the required long-term tar reforming catalyst activity
- Performing fundamental catalyst studies to determine deactivation kinetics and mechanisms by probing catalyst surfaces to uncover molecular-level details
- Determining optimized catalyst formulations and materials at the pilot scale to demonstrate catalyst performance and lifetimes as a function of process conditions and feedstock

Although consolidated tar and light hydrocarbon reforming tests performed with Ni-based catalysts have demonstrated the technical feasibility of this gas cleanup and conditioning strategy, alternative catalyst formulations can be developed to optimize reforming catalyst activity and lifetime in addition to expanded functionality. Specific further improvements that could be realized in catalyst functionality are:

- Further process intensification is possible by designing catalysts with higher tolerances for sulfur and chlorine poisons.
- Further reductions in gas cleanup costs could be realized by lowering or eliminating the sulfur and chlorine removal cost prior to reforming.
- Optimizing the water gas shift activity of reforming catalysts could reduce or eliminate the need for an additional downstream shift reactor.

Mixed Alcohol Synthesis R&D Needs

The ability to produce mixed alcohols from syngas has been known since the beginning of the last century; however, the commercial success of mixed alcohol synthesis has been limited by poor selectivity and low product yields. Single-pass yields are on the order of 10% syngas conversion (38.5% CO conversion) to alcohols, with methanol typically being the most abundant alcohol produced (Wender 1996; Herman 2000). For mixed alcohol synthesis to become an

economical commercial process, there is a need for improved catalysts that increase the productivity and selectivity to higher alcohols (Fierro 1993).

Improvements in mixed alcohol synthesis catalysts could potentially increase alcohol yields and selectivity of ethanol production from clean syngas and improve the overall economics of the process through better heat integration and control and fewer syngas recycling loops. Specific research targets to achieve the cost-competitive 2012 target case are:

- Develop improved mixed alcohol catalysts that will increase the single-pass CO conversion from 38.5% to 50% and potentially higher and improve the CO selectivity to alcohols from 80% to 90%.
- Develop improved mixed alcohol catalysts with higher activity that will require a lower operating pressure (1,000 psia compared with 2,000 psia) to significantly lower process operating costs. This combination of lower syngas pressure for alcohol synthesis and less unconverted syngas to recompress and recycle has the added benefit of lowering the energy requirement for the improved synthesis loop.
- Alternative mixed alcohol synthesis reactors and catalysts should be explored. Greatly improved temperature control of the exothermic synthesis reaction has been demonstrated to significantly improve yields and product selectivity. Precise temperature control reactor designs need to be developed for the mixed alcohol synthesis reaction to improve the yields and the economics of the process.

Integration/Demonstration

As is the case for any sophisticated conversion process, combining the individual unit operations into a complete, integrated systematic process is a significant challenge. Individual pilot-scale operations to demonstrate the required performance of the unit operations as well as complete integrated pilot development runs will be required to demonstrate the cost-competitive technology. A specific challenge will be to continue to demonstrate process intensification and higher yields at pilot scale to reduce capital costs.

Achieving the technical target for the accelerated path to thermochemical ethanol requires meeting the specific research targets as outlined above. Missing or delaying any of these targets forfeits the 2012 target and jeopardizes the deployment of technologies in time to meet the 30x30 goal. The cost implications of missing, hitting or exceeding a target or set of targets are easily determined with process uncertainty analysis that will be performed and detailed in the upcoming Mixed Alcohol Design Report due in January 2007. Combinations of sensitivity analysis can provide several ways to achieve the same cost-competitive target, which reduces the overall risk of the process. Quantifying the relative cost savings for process improvements allows work to be directed to the most cost effective R&D to achieve the 2012 technical target for thermochemical ethanol production.

References

Aden, A., Spath,. P.L. (2005) Milestone Completion Report "The Potential of Thermochemical Ethanol Via Mixed Alcohols Production." September 2005. http://devafdc.nrel.gov/bcfcdoc/9432.doc

Bizzari, S.N.; Gubler, R.; Kishi, A. (2002). "Oxo Chemicals." Chemical Economics Handbook, SRI International, Menlo Park, CA. Report number 682.7000

Foust, T.D.; Wooley, R.; Sheehan, J.; Wallace, R.; Ibsen, K.; Dayton, D.; Himmel, M.; Ashworth, J.; McCormick, R.; Melendez, M.; Hess, J.R.; Kenney, K.; Wang, M.; Snyder, S.; Werpy, T. *A National Laboratory Market and Technology Assessment of the 30X30 Scenario*. Draft NREL Report. December 2006.

Fierro, J. L. G. (1993). "Catalysis in C1 chemistry: future and prospect." Catalysis Letters 22(1-2): 67-91.

Herman, R. G. (2000). "Advances in catalytic synthesis and utilization of higher alcohols." Catalysis Today 55(3): 233-245.

Wender, I. (1996). "Reactions of synthesis gas." Fuel Processing Technology 48(3): 189-297.

Spath, P.L. and Dayton, D. C. "Preliminary Screening -- Technical and Economic Assessment of Synthesis Gas to Fuels and Chemicals with Emphasis on the Potential for Biomass-Derived Syngas." 160 pp.; NREL Report No. TP-510-34929. 2003

Appendix C

NREL Biorefinery Design Database Description and Summary

NREL's Process Engineering Team has developed a database of primary information on all of the equipment in the benchmark model. This database contains information about the cost, reference year, scaling factor, scaling characteristic, design information and back-up cost referencing. The information is stored in a secure database and can be directly linked to the economic portion of the model. In addition to having all of the cost information used by the model, it has the ability to store documents pertaining to the piece of equipment. These include sizing and costing calculations and vendor information when available.

The following summarizes the important fields of information contained in the database. A partial listing of the information is attached for each piece of equipment. Additional information from the database is contained in the equipment cost listing in Appendix D.

Equipment Number:[AB]	Unique identifier, the first letter indicates the equipment type and the first number represents the process area, e.g., P-301 is a pump in Area 300
Equipment Name:[AB]	Descriptive name of the piece of equipment
Associated PFD:	PFD number on which the piece of equipment appears, e.g., PFD-P800-A101
Equipment Category:[A]	Code indicating the general type of equipment, e.g., PUMP
Equipment Type:[A]	Code indicating the specific type of equipment, e.g., CENTRIFUGAL for a pump
Equipment Description:[A]	Short description of the size or characteristics of the piece of equipment, e.g., 20 gpm, 82 ft head for a pump
Number Required:[B]	Number of duplicate pieces of equipment needed
Number Spares:[B]	Number of on-line spares
Scaling Stream:[B]	Stream number or other characteristic variable from the ASPEN model by which the equipment cost will be scaled
Base Cost:[B]	Equipment cost
Cost Basis:[A]	Source of the equipment cost, e.g., ICARUS or VENDOR
Cost Year:[B]	Year for which the cost estimate is based
Base for Scaling:[B]	Value of the scaling stream or variable used to obtain the base cost of the equipment
Base Type:	Type of variable used for scaling, e.g., FLOW, DUTY, etc.
Base Units:	Units of the scaling stream or variable, e.g., KG/HR, CAL/S
Installation Factor:[B]	Value of the installation factor. Installed Cost = Base Cost x Installation Factor
Installation Factor Basis:	Source of the installation factor value, e.g., ICARUS, VENDOR
Scale Factor Exponent:[B]	Value of the exponential scaling equation
Scale Factor Basis:	Source of the scaling exponent value, e.g., GARRETT, VENDOR
Material of Construction:[A]	Material of Construction
Notes:	Any other important information about the design or cost
Document:	Complete, multi-page document containing design calculations, vendor literature and quotations and any other important information. This is stored as an electronic document and can be pages from a spreadsheet other electronic sources or scanned information from vendors.
Design Date:	Original date for the design of this piece of equipment
Modified Date:	The system automatically marks the date in this field whenever any field is changed

[A] These fields are listed for all pieces of equipment in this Appendix.
[B] These fields are part of the equipment cost listing in Appendix D.

EQUIPMENT_NU	EQUIPMENT_NAME	EQUIPMENT_CATEGO	EQUIPMENT_TYPE	EQUIPMENT_DESCRIPTION	MATERIAL_CONS	COST_BASIS
PFD-P800-A101-2						
C-101	Hopper Feeder	CONVEYOR	VIBRATING-FEEDER	Included in overall cost for feed handling & drying taken from several literature sources	CS	LITERATURE
C-102	Screener Feeder Conveyor	CONVEYOR	BELT	Included in overall cost for feed handling & drying taken from several literature sources	CS	LITERATURE
C-103	Radial Stacker Conveyor	CONVEYOR	BELT	Included in overall cost for feed handling & drying taken from several literature sources	CS	LITERATURE
C-104	Dryer Feed Screw Conveyor	CONVEYOR	SCREW	Included in overall cost for feed handling & drying taken from several literature sources	CS	LITERATURE
C-105	Gasifier Feed Screw Conveyor	CONVEYOR	SCREW	Included in overall cost for feed handling & drying taken from several literature sources	316SS	LITERATURE
H-286B	Flue Gas Cooler/Steam Generator #1	HEATX	SHELL-TUBE	duty = 155 MMBtu/hr; LMTD = 733 F; U = 150 Btu/hr-ft^2-F; area = 1,410 ft^2; fixed tube sheet	CS/INCL	QUESTIMATE
H-286C	Flue Gas Cooler /Boiler Water Preheater #1	HEATX	SHELL-TUBE	duty = 20 MMBtu/hr; LMTD = 244 F; U = 100 Btu/hr-ft^2-F; area = 823 ft^2; fixed TS	CS/A214	QUESTIMATE
H-311B	Flue Gas Cooler / Steam Generator #3	HEATX	SHELL-TUBE	duty = 47.9 MMBtu/hr; LMTD = 457; area = 698 sq ft; U = 150 Btu/hr-ft^2-F; fixed TS	CS/316S	ICARUS
K-101	Flue Gas Blower	FAN	CENTRIFUGAL	Included in overall cost for feed handling & drying taken from several literature sources	SS304	LITERATURE
M-101	Hydraulic Truck Dump with Scale	SCALE	TRUCK-SCALE	Included in overall cost for feed handling & drying taken from several literature sources		LITERATURE
M-102	Hammermill	SIZE-REDUCTION		Included in overall cost for feed handling & drying taken from several literature sources	CS	LITERATURE
M-103	Front End Loaders	VEHICLE	LOADER	Included in overall cost for feed handling & drying taken from several literature sources	CS	LITERATURE
M-104	Rotary Biomass Dryer	DRYER	ROTARY-DRUM	Included in overall cost for feed handling & drying taken from several literature sources	CS	LITERATURE
S-101	Magnetic Head Pulley	SEPARATOR	MAGNET	Included in overall cost for feed handling & drying taken from several literature sources	CS	LITERATURE
S-102	Screener	SEPARATOR	SCREEN	Included in overall cost for feed handling & drying taken from several literature sources	CS	LITERATURE
S-103	Dryer Air Cyclone	SEPARATOR	GAS CYCLONE	Included in overall cost for feed handling & drying taken from several literature sources	CS	LITERATURE
S-104	Dryer Air Baghouse Filter	SEPARATOR	FABRIC-FILTER	Included in overall cost for feed handling & drying taken from several literature sources		LITERATURE
T-101	Dump Hopper	TANK	LIVE-BTM-BIN	Included in overall cost for feed handling & drying taken from several literature sources	CS	LITERATURE
T-102	Hammermill Surge Bin	TANK	LIVE-BTM-BIN	Included in overall cost for feed handling & drying taken from several literature sources	CS	LITERATURE
T-103	Dryer Feed Bin	TANK	LIVE-BTM-BIN	Included in overall cost for feed handling & drying taken from several literature sources	CS	LITERATURE
T-104	Dried Biomass Hopper	TANK	VERTICAL-VESSEL	Included in overall cost for feed handling & drying taken from several literature sources	CS	LITERATURE
PFD-P800-A201						
C-201	Sand/ash Conditioner/Conveyor	CONVEYOR	SCREW	Included in overall cost for gasification & gas clean up taken from several literature sources	CS	LITERATURE
K-202	Combustion Air Blower	FAN	CENTRIFUGAL	Included in overall cost for gasification & gas clean up taken from several literature sources	CS	LITERATURE
M-201	Sand/ash Cooler	MISCELLANEOUS	MISCELLANEOUS	Included in overall cost for gasification & gas clean up taken from several literature sources		LITERATURE
R-201	Indirectly-heated Biomass Gasifier	REACTOR	VERTICAL-VESSEL	Included in overall cost for gasification & gas clean up taken from several literature sources	CS w/refractory	LITERATURE
R-202	Char Combustor	REACTOR	VERTICAL-VESSEL	Included in overall cost for gasification & gas clean up taken from several literature sources	CS w/refractory	LITERATURE
S-201	Primary Gasifier Cyclone	SEPARATOR	GAS CYCLONE	Included in overall cost for gasification & gas clean up taken from several literature sources	CS w/refractory	LITERATURE
S-202	Secondary Gasifier Cyclone	SEPARATOR	GAS CYCLONE	Included in overall cost for gasification & gas clean up taken from several literature sources	CS w/refractory	LITERATURE
S-203	Primary Combustor Cyclone	SEPARATOR	GAS CYCLONE	Included in overall cost for gasification & gas clean up taken from several literature sources	CS w/refractory	LITERATURE
S-204	Secondary Combustor Cyclone	SEPARATOR	GAS CYCLONE	Included in overall cost for gasification & gas clean up taken from several literature sources	CS w/refractory	LITERATURE
S-205	Electrostatic Precipitator	SEPARATOR	MISCELLANEOUS	Included in overall cost for gasification & gas clean up taken from several literature sources	CS	LITERATURE
T-201	Sand/ash Bin	TANK	FLAT-BTM-STORAGE	Included in overall cost for gasification & gas clean up taken from several literature sources	CS	LITERATURE

EQUIPMENT_NU	EQUIPMENT_NAME	EQUIPMENT_CATEGO	EQUIPMENT_TYPE	EQUIPMENT_DESCRIPTION	MATERIAL_CONS	COST_BASIS
PFD-P800-A301-5						
H-301	Quench Water Recirculation Cooler	HEATX	SHELL-TUBE	Included in overall cost for gasification & gas clean up taken from several literature sources	CS	LITERATURE
H-301A	Post-tar Reformer Cooler / Steam Generator #2	HEATX	SHELL-TUBE	duty = 47.9 MMBtu/hr; LMTD = 457; area = 698 sq ft; U = 150 Btu/hr-ft^2-F; fixed TS	CS/316S	ICARUS
H-301B	Reformer Flue Gas Cooler/Steam superheater	HEATX	SHELL-TUBE	duty = 94 MMBtu/hr; LMTD = 217 F; U = 150 Btu/hr-ft^2-F; area = 2,900 ft^2; fixed TS	CS/INCL	QUESTIMATE
H-301C	Reformed Syngas cooler / Synthesis Reactor Preheat #1	HEATX	SHELL-TUBE	duty =40.0 MMBtu/hr; LMTD = ?? F; U = 90 Btu/hr-ft^2-F; surface area = 1,552 ft^2	A214	QUESTIMATE
H-302	Syngas Compressor Intercoolers	HEATX	AIR-COOLED EXCHANGER	Cost of intercoolers included in cost for syngas compressor, K-301	CS	ICARUS
H-303	Water-cooled Aftercooler	HEATX	SHELL-TUBE	duty = 2.9 MMBtu/hr; LMTD = 25F; U = 150 Btu/hr-ft^2-F; surface area = 794 ft^2; fixed TS	SS304CS/A214	QUESTIMATE
H-304	LO-CAT Preheater	HEATX	SHELL-TUBE	duty = 0.8 MMBtu/hr;LMTD = 87 F; U = 90 Btu/hr-ft^2-F; surface area = 98 ft^2; fixed TS	A285C/CA443	QUESTIMATE
H-305	LO-CAT Absorbent Solution Cooler	HEATX	SHELL-TUBE	Included in LO-CAT system cost	304SS	VENDOR
H-315D1	Recycle Syngas Cooler / Steam Generator #4	HEATX	SHELL-TUBE	duty = 1.37 MMBtu/hr; LMTD = 1,220 F; U = 150 Btu/hr-ft^2-F; area = 7 ft^2; fixed TS	CS/INCL	QUESTIMATE
H-315D2	Recycle Syngas cooler #2 / Air preheat #1	HEATX	SHELL-TUBE	duty = 0.8 MMBtu/hr;LMTD = 87 F; U = 90 Btu/hr-ft^2-F; surface area = 98 ft^2; fixed TS	A285C/CA443	QUESTIMATE
K-301	Syngas Compressor	COMPRESSOR	CENTRIFUGAL	gas flow rate = 70,000 CFM; 6 impellers; design outlet pressure = 465 psi; 30,000 HP; intercoolers, aftercooler, & K.O.s included	A285C	QUESTIMATE
K-302	LO-CAT Feed Air Blower	FAN	CENTRIFUGAL	Included in LO-CAT system cost	CS	VENDOR
K-305	Regenerator Combustion Air Blower	FAN	CENTRIFUGAL	gas flow rate (actual) = 70133 CFM;	SS304	QUESTIMATE
M-301	Syngas Quench Chamber	MISCELLANEOUS		Included in overall cost for gasification & gas clean up taken from several literature sources	CS	LITERATURE
M-302	Syngas Venturi Scrubber	MISCELLANEOUS		Included in overall cost for gasification & gas clean up taken from several literature sources	CS	LITERATURE
M-303	LO-CAT Venturi Precontactor	MISCELLANEOUS		Included in LO-CAT system cost	304SS	VENDOR
M-304	LO-CAT Liquid-filled Absorber	COLUMN	ABSORBER	Included in LO-CAT system cost	304SS	VENDOR
P-301	Sludge Pump	PUMP	CENTRIFUGAL	1.4 GPM; 0.053 brake HP; design pressure = 60 psia	CS	QUESTIMATE
P-302	Quench Water Recirculation Pump	PUMP	CENTRIFUGAL	Included in the cost of the gasification & gas clean up system	CS	LITERATURE
P-303	LO-CAT Absorbent Solution Circulating Pump	PUMP	CENTRIFUGAL	Included in LO-CAT system cost	304SS	VENDOR
R-301A	Tar Reformer Catalyst Regenerator	REACTOR	VERTICAL-VESSEL	Taken from literature source	CS w/refractory	LITERATURE
R-303	Tar Reformer	REACTOR	VERTICAL-VESSEL	Included in overall cost for gasification & gas clean up taken from several literature sources	CS w/refractory	LITERATURE
R-304	LO-CAT Oxidizer Vessel	REACTOR	VERTICAL-VESSEL	Included in LO-CAT system cost	304SS	VENDOR
S-301	Pre-compressor Knock-out	SEPARATOR	KNOCK-OUT DRUM	18 ft diameter; 36 ft height; design pres = 40 psia; design temp = 197 F	CS	QUESTIMATE
S-302	Syngas Compressor Interstage Knock-outs	SEPARATOR	KNOCK-OUT DRUM	Cost of intercoolers K.O.s included in cost for syngas compressor, K-301	CS	ICARUS
S-303	Post-compressor Knock-out	SEPARATOR	KNOCK-OUT DRUM	7 ft. diameter; 14 ft height; design pres = 506 psia; design temp = 160 F	CS	QUESTIMATE
S-306	Tar Reformer Cyclone	SEPARATOR	GAS CYCLONE	Included in the cost of the tar reformer catalyst renegerator, R-204	CS	LITERATURE
S-307	Catalyst Regenerator Cyclone	SEPARATOR	GAS CYCLONE	Included in the cost of the tar reformer catalyst renegerator, R-204	CS	LITERATURE
S-310	L.P. Amine System	COLUMN	ABSORBER			OTHER
T-301	Sludge Settling Tank	SEPARATOR	CLARIFIER	3 ft diameter; 7 ft height; 431 gal volume;	SS304	QUESTIMATE
T-302	Quench Water Recirculation Tank	TANK	HORIZONTAL-VESSEL	Included in overall cost for gasification & gas clean up taken from several literature sources	CS	LITERATURE

EQUIPMENT_NU	EQUIPMENT_NAME	EQUIPMENT_CATEGO	EQUIPMENT_TYPE	EQUIPMENT_DESCRIPTION	MATERIAL_CONS	COST_BASIS
PFD-P800-A401-2						
H-410B	Flue Gas Cool / syngas rxn preheat	HEATX	SHELL-TUBE	duty = 0.8 MMBtu/hr;LMTD = 87 F; U = 90 Btu/hr-ft^2-F; surface area = 98 ft^2; fixed TS	A285C/CA443	QUESTIMATE
H-411A	Air preheat #3 / post Reactor Syngas cooling #1	HEATX	SHELL-TUBE	duty = 0.8 MMBtu/hr;LMTD = 87 F; U = 90 Btu/hr-ft^2-F; surface area = 98 ft^2; fixed TS	A285C/CA443	QUESTIMATE
H-411B	Post Synthesis cooler #2/Deaerator Water Preheater #1	HEATX	SHELL-TUBE	duty = 20 MMBtu/hr; LMTD = 244 F; U = 100 Btu/hr-ft^2-F; area = 823 ft^2; fixed TS	CS/A214	QUESTIMATE
H-411C	Post Synthesis cooler #3/Makeup Water heater	HEATX	SHELL-TUBE	duty = 20 MMBtu/hr; LMTD = 244 F; U = 100 Btu/hr-ft^2-F; area = 823 ft^2; fixed TS	CS/A214	QUESTIMATE
H-411D	Post Synthesis cooler #4 / syngas recycle heat #1	HEATX	SHELL-TUBE	duty = 0.8 MMBtu/hr;LMTD = 87 F; U = 90 Btu/hr-ft^2-F; surface area = 98 ft^2; fixed TS	A285C/CA443	QUESTIMATE
H-411E	Post Synthesis Cooler #5/Mol Sieve preheater #2	HEATX	SHELL-TUBE	duty = 20 MMBtu/hr; LMTD = 244 F; U = 100 Btu/hr-ft^2-F; area = 823 ft^2; fixed TS	CS/A214	QUESTIMATE
H-412	Post Mixed Alcohol Cooler	HEATX	SHELL-TUBE	duty = 76.5 MMBtu/hr; LMTD = ?? F; U = 100 Btu/hr-ft^2-F; surface area = 4,763 ft^2	A214	QUESTIMATE
H-413	Mixed Alcohol first Condenser (air cooled)	HEATX	AIR-COOLED EXCHANGER			
H-414	Mixed Alcohol Condenser	HEATX	SHELL-TUBE	duty = 78 MMBtu/hr; LMTD = 41 F; U = 150 Btu/hr-ft^2-F; surface area = 12,462 ft^2	A214	QUESTIMATE
H-416B	Recycle Syngas Heat #2 / Flue gas Cool	HEATX	SHELL-TUBE	duty =40.0 MMBtu/hr; LMTD = ?? F; U = 90 Btu/hr-ft^2-F; surface area = 1,552 ft^2	A214	QUESTIMATE
K-410	Mixed Alcohol Gas Compressor	COMPRESSOR	CENTRIFUGAL	gas flow rate = 2,481 CFM; 4 impellers; design outlet pressure = 700 psi; 10,617 HP; intercoolers, aftercooler, & K.O.s included	A285C	QUESTIMATE
K-412	Purge Gas Expander	COMPRESSOR	CENTRIFUGAL	gas flow rate = 144 CFM; design outlet pressure =25 psi; 2740 HP	A285C	QUESTIMATE
R-410	Mixed Alcohol Reactor	REACTOR	VERTICAL-VESSEL	Fixed Bed Synthesis Reactor with MoS2-based catalyst. Sized from hourly space velocity of 3000	CS w/refractory	QUESTIMATE
S-501	Mixed Alcohols Condensation Knock-out	SEPARATOR	KNOCK-OUT DRUM	H/D = 2; 5 ft diam; 9 ft height; operating pressure = 1993 psia; operating temperature = 110 F	A-515	QUESTIMATE
PFD-P800-A501-2						
D-504	Ethanol/Propanol Splitter	COLUMN	DISTILLATION			
D-505	Methanol/Ethanol Splitter	COLUMN	DISTILLATION			
H-503A	Syngas Cooler #4 / Mol Sieve preheater #1	HEATX	SHELL-TUBE	duty = 20 MMBtu/hr; LMTD = 244 F; U = 100 Btu/hr-ft^2-F; area = 823 ft^2; fixed TS	CS/A214	QUESTIMATE
H-503B	Mol Sieve Superheater / reformed syngas cool #5	HEATX	SHELL-TUBE	duty = 0.8 MMBtu/hr;LMTD = 87 F; U = 90 Btu/hr-ft^2-F; surface area = 98 ft^2; fixed TS	A285C/CA443	QUESTIMATE
H-504C	D-504 condenser (air cooled)	HEATX	AIR-COOLED EXCHANGER			
H-504R	Ethanol/Propanol Splitter Reboiler	HEATX	SHELL-TUBE			
H-505C	D-505 condenser (air cooled)	HEATX	AIR-COOLED EXCHANGER			
H-505R	Methanol/Ethanol Splitter Reboiler	HEATX	SHELL-TUBE			
H-513	Mol Sieve Flush Condenser (air cooled)	HEATX	AIR-COOLED EXCHANGER			
H-590	MA Product Cooler / Mol Sieve preheater #3	HEATX	SHELL-TUBE	duty = 3 MMBtu/hr; LMTD = 236 F; U = 600 Btu/hr-ft^2-F; area = 20 ft^2; pre-engineered U-tube	A285C/CA443	QUESTIMATE
H-591	Higher Alcohol Product Finishing cooler	HEATX	SHELL-TUBE	Included in overall cost for gasification & gas clean up taken from several literature sources	CS	LITERATURE
H-592	ETHANOL Product Cooler / Mol Sieve preheater #4	HEATX	SHELL-TUBE	duty = 3 MMBtu/hr; LMTD = 236 F; U = 600 Btu/hr-ft^2-F; area = 20 ft^2; pre-engineered U-tube	A285C/CA443	QUESTIMATE
H-593	ETHANOL Product Finishing cooler	HEATX	SHELL-TUBE	Included in overall cost for gasification & gas clean up taken from several literature sources	CS	LITERATURE
P-504B	Ethanol/Propanol Splitter Bottoms Pump	PUMP	CENTRIFUGAL			
P-504R	Ethanol/Propanol Splitter Reflux Pump	PUMP	CENTRIFUGAL			
P-505B	Methanol/Ethanol Splitter Bottoms Pump	PUMP	CENTRIFUGAL			
P-505R	Methanol/Ethanol Splitter Reflux Pump	PUMP	CENTRIFUGAL			
S-502	Methanol Separation Column	COLUMN	DISTILLATION	13.5' dia, 32 Actual Trays, Nutter V-Grid Trays	SS304	ICARUS
S-503	Molecular Sieve (9 pieces)	MISCELLANEOUS	PACKAGE	Superheater, twin mole sieve columns, product cooler, condenser, pumps, vacuum source.	SS	VENDOR
T-504	Ethanol/Propanol Splitter Reflux Drum	TANK	KNOCK-OUT DRUM			
T-505	Methanol/Ethanol Splitter Reflux Drum	TANK	KNOCK-OUT DRUM			
T-590	Mixed Alcohol Product Storage Tank	TANK	FLAT-BTM-STORAGE			
T-592	Ethanol Product Storage Tank	TANK	FLAT-BTM-STORAGE			

EQUIPMENT_NU	EQUIPMENT_NAME	EQUIPMENT_CATEGO	EQUIPMENT_TYPE	EQUIPMENT_DESCRIPTION	MATERIAL_CONS	COST_BASIS
PFD-P800-A601-3						
H-601	Steam Turbine Condenser	HEATX	SHELL-TUBE	Included in the cost of the steam trubine/generator (M-602); condenser steam flow rate = 342,283 lb/hr		ADEN, ET. AL. 2002
H-602	Blowdown Cooler / Deaerator Water Preheater	HEATX	SHELL-TUBE	duty = 3 MMBtu/hr; LMTD = 236 F; U = 600 Btu/hr-ft^2-F; area = 20 ft^2; pre-engineered U-tube	A285C/CA443	QUESTIMATE
H-603	Blowdown Water-cooled Cooler	HEATX	SHELL-TUBE	duty = 0.6 MMBtu/hr; LMTD = 47 F; U = 225 Btu/hr-ft^2-F; area = 60 ft^2; fixed TS	A214	QUESTIMATE
M-601	Hot Process Water Softener System	MISCELLANEOUS	PACKAGE	scaled cost to 700 gpm flow, 24" dia softener. Includes filters, chemical feeders, piping, valves		RICHARDSON
M-602	Extraction Steam Turbine/Generator	GENERATOR	STEAM-TURBINE	25.6 MW generated; 34,308 HP		VENDOR
M-603	Startup Boiler	MISCELLANEOUS	PACKAGE	Assume need steam requirement equal to 1/2 of steam requirement for gasifier at full rate steam rate = 36,560 lb/hr	CS	QUESTIMATE
P-601	Collection Pump	PUMP	CENTRIFUGAL	513 GPM; 4 brake HP; outlet pressure = 25 psia	CS	QUESTIMATE
P-602	Condensate Pump	PUMP	CENTRIFUGAL	190 GPM; 4 brake HP; outlet pressure = 25 psia	SS304	QUESTIMATE
P-603	Deaerator Feed Pump	PUMP	CENTRIFUGAL	702 GPM; 14 brake HP; outlet pressure = 40 psia	CS	QUESTIMATE
P-604	Boiler Feed Water Pump	PUMP	CENTRIFUGAL	730 GPM; 759 brake HP; outlet pressure = 1,345 psia	CS	QUESTIMATE
S-601	Blowdown Flash Drum	TANK	HORIZONTAL-VESSEL	H/D = 2; residence time = 5 min; 2 ft diameter; 4 ft height; op press = 1,280 psi; op temp = 575 F	CS	QUESTIMATE
T-601	Condensate Collection Tank	TANK	HORIZONTAL-VESSEL	residence time = 10 minutes; H/D = 2; 8 ft diameter; 17 ft height	CS	QUESTIMATE
T-602	Condensate Surge Drum	TANK	HORIZONTAL-VESSEL	residence time = 10 minutes; H/D = 2; 9 ft diameter; 17 ft height	CS	QUESTIMATE
T-603	Deaerator	TANK	HORIZONTAL-VESSEL	liquid flow rate = 348,266 lb/hr; 150 psig design pressure; 10 min residence time	CS;SS316	VENDOR
T-604	Steam Drum	TANK	HORIZONTAL-VESSEL	424 gal, 4.5' x 4'dia, 15 psig	CS	ICARUS
PFD-P800-A701-2						
K-701	Plant Air Compressor	COMPRESSOR	RECIPROCATING	450 cfm, 125 psig outlet	CS	ICARUS
M-701	Cooling Tower System	COOLING-TOWER	INDUCED-DRAFT	approx 16,500 gpm, 140 MMBtu/hr	FIBERGLASS	DELTA-T98
M-702	Hydraulic Truck Dump with Scale	SCALE	TRUCK-SCALE	Hydraulic Truck Dumper with Scale	CS	VENDOR
M-703	Flue Gas Stack	MISCELLANEOUS	MISCELLANEOUS	42 inch diameter; 250 deg F	A515	QUESTIMATE
P-701	Cooling Water Pump	PUMP	CENTRIFUGAL	16,188 GPM; 659 brake HP; outlet pressure 75 psi	CS	QUESTIMATE
P-702	Firewater Pump	PUMP	CENTRIFUGAL	2,500 gpm, 50 ft head	CS	ICARUS
P-703	Diesel Pump	PUMP	CENTRIFUGAL	30 gpm, 150 ft head	CS	ICARUS
P-704	Ammonia Pump	PUMP	CENTRIFUGAL	8.5 gpm, 22 ft head	CS	ICARUS
P-705	Hydrazine Pump	PUMP	CENTRIFUGAL	5 gpm, 75 ft head	CS	DELTA-T98
S-701	Instrument Air Dryer	DRYER	PACKAGE	400 SCFM Air Dryer, -40 F Dewpoint	CS	RICHARDSON
T-701	Plant Air Receiver	TANK	HORIZONTAL-VESSEL	900 gal., 200 psig	CS	ICARUS
T-702	Firewater Storage Tank	TANK	FLAT-BTM-STORAGE	600,000 gal, 4 hr res time, 51' dia x 40' high, atmospheric	A285C	ICARUS
T-703	Diesel Storage Tank	TANK	FLAT-BTM-STORAGE	10,667 gal, 120 hr res time, 90% wv, 10' dia x 18.2' high, atmospheric	A285C	ICARUS
T-704	Ammonia Storage Tank	TANK	HORIZONTAL-STORAGE	Included in the cost of the feed handling step.	A515	ICARUS
T-705	Olivine Lock Hopper	TANK	VERTICAL-VESSEL	Included in the cost of the feed handling step.	CS	DELTA-T98
T-706	MgO Lock Hopper	TANK	VERTICAL-VESSEL	20' x 20' Bin, Tapering to 3' x 3' at Bottom. Capacity 6,345 cf, two truck loads.	CS	DELTA-T98
T-707	Hydrazine Storage Tank	TANK	VERTICAL-VESSEL	260 gal, 4.9' x 3'dia., 10psig	SS316	ICARUS

Appendix D

Individual Equipment Cost Summary

Equipment Number	Number Required	Number Spares	Equipment Name	Size Ratio	Original Equip Cost (per unit)	Base Year	Total Original Equip Cost (Req'd & Spare) in Base Year	Scaling Exponent	Scaled Cost in Base Year	Installation Factor	Installed Cost in Base Year	Installed Cost in 2005$
C-101	4		Hopper Feeder	1.00	$0	2002	$0	0.75	$0	2.47	$0	$0
C-102	2		Screener Feeder Conveyor	1.00	$0	2002	$0	0.75	$0	2.47	$0	$0
C-103	2		Radial Stacker Conveyor	1.00	$0	2002	$0	0.75	$0	2.47	$0	$0
C-104	2		Dryer Feed Screw Conveyor	1.00	$0	2002	$0	0.75	$0	2.47	$0	$0
C-105	2		Gasifier Feed Screw Conveyor	0.93	$0	2002	$0	0.75	$0	2.47	$0	$0
H-286B	1		Flue Gas Cooler/Steam Generator #1	0.60	$347,989	2002	$347,989	0.6	$256,890	2.47	$634,519	$750,965
H-286C	1		Flue Gas Cooler /Boiler Water Preheater #1	0.03	$20,989	2002	$20,989	0.6	$2,637	2.47	$6,512	$7,708
H-311B	1		Flue Gas Cooler / Steam Generator #3	0.69	$69,089	2002	$69,089	0.65	$54,035	2.47	$133,465	$157,959
K-101	2		Flue Gas Blower	1.56	$0	2002	$0	0.75	$0	2.47	$0	$0
M-101	4		Hydraulic Truck Dump with Scale	1.00	$0	2002	$0	0.75	$0	2.47	$0	$0
M-102	2		Hammermill	1.00	$0	2002	$0	0.75	$0	2.47	$0	$0
M-103	3		Front End Loaders	1.00	$0	2002	$0	0.75	$0	2.47	$0	$0
M-104	2		Rotary Biomass Dryer	1.00	$3,813,728	2002	$7,627,455	0.75	$7,627,450	2.47	$18,839,801	$22,297,257
S-101	2		Magnetic Head Pulley	1.00	$0	2002	$0	0.75	$0	2.47	$0	$0
S-102	2		Screener	1.00	$0	2002	$0	0.75	$0	2.47	$0	$0
S-103	2		Dryer Air Cyclone	1.56	$0	2002	$0	0.75	$0	2.47	$0	$0
S-104	2		Dryer Air Baghouse Filter	0.93	$0	2002	$0	0.75	$0	2.47	$0	$0
T-101	4		Dump Hopper	1.00	$0	2002	$0	0.75	$0	2.47	$0	$0
T-102	1		Hammermill Surge Bin	1.00	$0	2002	$0	0.75	$0	2.47	$0	$0
T-103	2		Dryer Feed Bin	1.00	$0	2002	$0	0.75	$0	2.47	$0	$0
T-104	2		Dried Biomass Hopper	0.93	$0	2002	$0	0.75	$0	2.47	$0	$0
A100						**Subtotal**	**$8,065,522**		**$7,941,011**	2.47	**$19,614,298**	**$23,213,888**
C-201	1		Sand/ash Conditioner/Conveyor	0.33	$0	2002	$0	0.65	$0	2.47	$0	$0
K-202	2		Combustion Air Blower	0.97	$0	2002	$0	0.65	$0	2.47	$0	$0
M-201	2		Sand/ash Cooler	0.33	$0	2002	$0	0.65	$0	2.47	$0	$0
R-201	2		Indirectly-heated Biomass Gasifier	1.00	$2,212,201	2002	$4,424,402	0.65	$4,418,389	2.47	$10,913,421	$12,916,238
R-202	2		Char Combustor	1.00	$0	2002	$0	0.65	$0	2.47	$0	$0
S-201	2		Primary Gasifier Cyclone	1.00	$0	2002	$0	0.65	$0	2.47	$0	$0
S-202	2		Secondary Gasifier Cyclone	0.97	$0	2002	$0	0.65	$0	2.47	$0	$0
S-203	2		Primary Combustor Cyclone	1.00	$0	2002	$0	0.65	$0	2.47	$0	$0
S-204	2		Secondary Combustor Cyclone	0.95	$0	2002	$0	0.65	$0	2.47	$0	$0
S-205	2		Electrostatic Precipitator	0.96	$0	2002	$0	0.65	$0	2.47	$0	$0
T-201	1		Sand/ash Bin	0.33	$0	2002	$0	0.65	$0	2.47	$0	$0
A200						**Subtotal**	**$4,424,402**		**$4,418,389**	2.47	**$10,913,421**	**$12,916,238**

H-301	1		Quench Water Recirculation Cooler	1.57	$0	2002	$0	0.44	$0	2.47	$0	$0
H-301A	1		Post-tar Reformer Cooler / Steam Generator #2	1.66	$69,089	2002	$69,089	0.65	$96,054	2.47	$237,253	$280,793
H-301B	1		Reformer Flue Gas Cooler/Steam superheater	1.00	$196,589	2002	$196,589	0.6	$196,056	2.47	$484,259	$573,129
H-301C	1		Reformed Syngas cooler / Synthesis Reactor Preheat #1	0.32	$144,006	2002	$144,006	0.44	$87,219	2.47	$215,431	$254,966
H-302	5		Syngas Compressor Intercoolers	1.57	$0	2002	$0	0.65	$0	2.47	$0	$0
H-303	1		Water-cooled Aftercooler	1.81	$20,889	2002	$20,889	0.44	$27,111	2.47	$66,965	$79,254
H-304	1		LO-CAT Preheater	0.15	$4,743	2002	$4,743	0.6	$1,539	2.47	$3,800	$4,498
H-305	1		LO-CAT Absorbent Solution Cooler	0.29	$0	2002	$0	0.44	$0	2.47	$0	$0
H-315D1	1		Recycle Syngas Cooler / Steam Generator #4	4.20	$26,143	2002	$26,143	0.6	$61,841	2.47	$152,746	$180,778
H-315D2	1		Recycle Syngas cooler #2 / Air preheat #1	4.08	$4,743	2002	$4,743	0.6	$11,020	2.47	$27,219	$32,214
K-301	1		Syngas Compressor	1.73	$3,896,834	2002	$3,896,834	0.8	$6,036,915	2.47	$14,911,181	$17,647,662
K-302	1		LO-CAT Feed Air Blower	0.73	$0	2002	$0	0.65	$0	2.47	$0	$0
K-305	1		Regenerator Combustion Air Blower	0.94	$35,020	2002	$35,020	0.59	$33,806	2.47	$83,500	$98,824
M-301	1		Syngas Quench Chamber	1.57	$0	2002	$0	0.65	$0	2.47	$0	$0
M-302	1		Syngas Venturi Scrubber	1.57	$0	2002	$0	0.65	$0	2.47	$0	$0
M-303	1		LO-CAT Venturi Precontactor	0.73	$0	2002	$0	0.65	$0	2.47	$0	$0
M-304	1		LO-CAT Liquid-filled Absorber	0.29	$0	2002	$0	0.65	$0	2.47	$0	$0
P-301	1	1	Sludge Pump	0.08	$3,911	2002	$7,822	0.33	$3,351	2.47	$8,277	$9,795
P-302	1	1	Quench Water Recirculation Pump	0.99	$0	2002	$0	0.65	$0	2.47	$0	$0
P-303	1	1	LO-CAT Absorbent Solution Circulating Pump	1.57	$0	2002	$0	0.65	$0	2.47	$0	$0
R-301A	1		Tar Reformer Catalyst Regenerator	1.62	$2,429,379	2002	$2,429,379	0.65	$3,324,994	2.47	$8,212,736	$9,719,926
R-303	1		Tar Reformer	1.57	$2,212,201	2002	$2,212,201	0.65	$2,965,912	2.47	$7,325,802	$8,670,224
R-304	1		LO-CAT Oxidizer Vessel	0.73	$1,000,000	2002	$1,000,000	0.65	$813,486	2.47	$2,009,311	$2,378,057
S-301	1		Pre-compressor Knock-out	1.73	$157,277	2002	$157,277	0.6	$218,395	2.47	$539,436	$638,432
S-302	4		Syngas Compressor Interstage Knock-outs	1.73	$0	2002	$0	0.6	$0	2.47	$0	$0
S-303	1		Post-compressor Knock-out	1.86	$40,244	2002	$40,244	0.6	$58,421	2.47	$144,300	$170,781
S-306	1		Tar Reformer Cyclone	1.57	$0	2002	$0	0.65	$0	2.47	$0	$0
S-307	1		Catalyst Regenerator Cyclone	1.62	$0	2002	$0	0.65	$0	2.47	$0	$0
S-310	1		L.P. Amine System	1.26	$3,485,685	2002	$3,485,685	0.75	$4,155,524	2.47	$10,264,143	$12,147,805
T-301	1		Sludge Settling Tank	0.00	$11,677	2002	$11,677	0.6	$260	2.47	$641	$759
T-302	1		Quench Water Recirculation Tank	1.57	$0	2002	$0	0.65	$0	2.47	$0	$0
A300						**Subtotal**	**$13,742,341**		**$18,091,903**	2.47	**$44,687,000**	**$52,887,900**

H-410B	1		Flue Gas Cool / syngas rxn preheat	6.78	$4,743	2002	$4,743	0.6	$14,951	2.47	$36,928	$43,705
H-411A	1		Air preheat #3 / post Reactor Syngas cooling #1	2.65	$4,743	2002	$4,743	0.6	$8,505	2.47	$21,007	$24,862
H-411B	1		Post synthesis cooler #2/Deaerator Water Preheater #1	0.77	$20,989	2002	$20,989	0.6	$17,979	2.47	$44,409	$52,558
H-411C	1		Post Synthesis cooler #3/Makeup Water heater	0.33	$20,989	2002	$20,989	0.6	$10,757	2.47	$26,569	$31,445
H-411D	1		Post Synthesis cooler #4 / syngas recycle heat #1	5.20	$4,743	2002	$4,743	0.6	$12,758	2.47	$31,512	$37,295
H-411E	1		Post Synthesis Cooler #5/Mol Sieve preheater #2	0.04	$20,989	2002	$20,989	0.6	$2,991	2.47	$7,389	$8,745
H-412	1		Post Mixed Alcohol Cooler	0.61	$90,820	2002	$90,820	0.44	$73,284	2.47	$181,011	$214,230
H-413	1		Mixed Alcohol first Condenser (air cooled)	0.76	$42,255	1990	$42,255	1	$42,255	2.47	$104,369	$136,649
H-414	1		Mixed Alcohol Condenser	0.06	$338,016	2002	$338,016	0.44	$96,403	2.47	$238,116	$281,814
H-416B	1		Recycle Syngas Heat #2 / Flue gas Cool	0.63	$144,006	2002	$144,006	0.44	$117,700	2.47	$290,718	$344,070
K-410	1		Mixed Alcohol Gas Compressor	0.89	$851,523	2002	$851,523	0.8	$773,871	2.47	$1,911,462	$2,262,251
K-412	1		Purge Gas Expander	12.01	$642,014	2002	$642,014	0.8	$4,689,955	2.47	$11,584,188	$13,710,103
R-410	1		Mixed Alcohol Reactor	0.34	$2,026,515	2002	$2,026,515	0.56	$1,101,031	2.47	$2,719,545	$3,218,633
S-501	1		Mixed Alcohols Condensation Knock-out	2.01	$55,447	2002	$55,447	0.6	$84,229	2.47	$208,045	$246,225
A400						**Subtotal**	**$4,267,792**		**$7,046,667**	2.47	**$17,405,267**	**$20,612,585**
D-504	1		Ethanol/Propanol Splitter	0.50	$478,100	1998	$478,100	1.32	$189,541	2.1	$398,035	$478,460
D-505	1		Methanol/Ethanol Splitter	0.54	$478,100	1998	$478,100	1.32	$210,444	2.1	$441,933	$531,228
H-503A	1		Syngas Cooler #4 / Mol Sieve preheater #1	1.08	$20,989	2002	$20,989	0.6	$21,965	2.47	$54,255	$64,211
H-503B	1		Mol Sieve Superheater / reformed syngas cool #5	0.66	$4,743	2002	$4,743	0.6	$3,709	2.47	$9,161	$10,842
H-504C	1		D-504 condenser (air cooled)	0.68	$39,408	1990	$39,408	1	$39,408	2.47	$97,338	$127,442
H-504R	1		Ethanol/Propanol Splitter Reboiler	0.18	$158,374	1996	$158,374	0.68	$49,237	2.1	$103,398	$126,830
H-505C	1		D-505 condenser (air cooled)	0.64	$62,938	1990	$62,938	1	$62,938	2.47	$155,458	$203,538
H-505R	1		Methanol/Ethanol Splitter Reboiler	0.26	$158,374	1996	$158,374	0.68	$63,019	2.1	$132,340	$162,330
H-513	1		Mol Sieve Flush Condenser (air cooled)	0.19	$21,181	1990	$21,181	1	$21,181	2.47	$52,318	$68,499
H-590	1		MA Product Cooler / Mol Sieve preheater #3	0.34	$3,043	2002	$3,043	0.6	$1,590	2.47	$3,928	$4,649
H-591	2		Ethanol Product Pump	0.21	$7,501	1998	$15,002	1.79	$957	3.47	$3,321	$3,992
H-592	1		ETHANOL Product Cooler / Mol Sieve preheater #4	1.51	$3,043	2002	$3,043	0.6	$3,903	2.47	$9,639	$11,408
H-593	3		Ethanol Product Pump	1.19	$7,502	1999	$22,506	2.79	$36,692	4.47	$164,012	$196,596
P-504B	1	1	Ethanol/Propanol Splitter Bottoms Pump	0.04	$42,300	1997	$84,600	0.79	$7,120	2.8	$19,937	$24,151
P-504R	1	1	Ethanol/Propanol Splitter Reflux Pump	0.37	$1,357	1998	$2,714	0.79	$1,240	2.8	$3,471	$4,172
P-505B	1	1	Methanol/Ethanol Splitter Bottoms Pump	0.08	$42,300	1997	$84,600	0.79	$11,343	2.8	$31,761	$38,475
P-505R	1	1	Methanol/Ethanol Splitter Reflux Pump	0.37	$1,357	1998	$2,714	0.79	$1,240	2.8	$3,471	$4,172
P-590	1		Mixed Alcohol Product Pump	0.21	$7,500	1997	$7,500	0.79	$2,226	2.47	$5,499	$6,661
P-592	1		Ethanol Product Pump	1.19	$7,500	1997	$7,500	0.79	$8,614	2.47	$21,276	$25,773
S-502	1		LP Syngas Separator	0.49	$55,447	2002	$55,447	0.6	$36,305	2.47	$89,673	$106,130
S-503	1		Molecular Sieve (9 pieces)	1.43	$904,695	1998	$904,695	0.7	$1,160,495	2.47	$2,866,422	$3,445,594
T-504	1		Ethanol/Propanol Splitter Reflux Drum	0.37	$11,900	1997	$11,900	0.93	$4,731	2.1	$9,934	$12,034
T-505	1		Methanol/Ethanol Splitter Reflux Drum	0.37	$11,900	1997	$11,900	0.93	$4,731	2.1	$9,934	$12,034
T-590	2		Mixed Alcohol Product Storage Tank	0.21	$165,800	1997	$331,600	0.51	$151,390	2.47	$373,933	$452,976
T-592	2		Ethanol Product Storage Tank	1.19	$165,800	1997	$331,600	0.51	$362,599	2.47	$895,620	$1,084,940
A500						**Subtotal**	**$3,302,572**		**$2,456,617**	2.424499069	**$5,956,067**	**$7,207,140**

H-601	1		Steam Turbine Condenser	0.87	$0	2002	$0	0.71	$0	2.47	$0	$0
H-602	1		Blowdown Cooler / Deaerator Water Preheater	0.00	$3,043	2002	$3,043	0.6	$0	2.47	$0	$0
H-603	1		Blowdown Water-cooled Cooler	4.90	$16,143	2002	$16,143	0.44	$32,485	2.47	$80,237	$94,962
M-601	1		Hot Process Water Softener System	1.00	$1,031,023	1999	$1,031,023	0.82	$1,028,430	2.47	$2,540,222	$3,044,885
M-602	1		Extraction Steam Turbine/Generator	1.00	$4,045,870	2002	$4,045,870	0.71	$4,037,059	2.47	$9,971,535	$11,801,498
M-603	1		Startup Boiler	1.00	$198,351	2002	$198,351	0.6	$198,351	2.47	$489,927	$579,837
P-601	1	1	Collection Pump	0.13	$7,015	2002	$14,030	0.33	$7,226	2.47	$17,847	$21,122
P-602	1	1	Condensate Pump	0.87	$5,437	2002	$10,874	0.33	$10,366	2.47	$25,605	$30,304
P-603	1	1	Deaerator Feed Pump	1.00	$8,679	2002	$17,358	0.33	$17,340	2.47	$42,831	$50,691
P-604	1	1	Boiler Feed Water Pump	1.00	$95,660	2002	$191,320	0.33	$191,126	2.47	$472,082	$558,718
S-601	1		Blowdown Flash Drum	1.00	$14,977	2002	$14,977	0.6	$14,950	2.47	$36,926	$43,703
T-601	1		Condensate Collection Tank	1.00	$24,493	2002	$24,493	0.6	$24,448	2.47	$60,386	$71,468
T-602	1		Condensate Surge Drum	1.00	$28,572	2002	$28,572	0.6	$28,519	2.47	$70,443	$83,371
T-603	1		Deaerator	1.00	$130,721	2002	$130,721	0.72	$130,432	2.47	$322,168	$381,292
T-604	1		Steam Drum	1.00	$9,200	1997	$9,200	0.72	$9,180	2.47	$22,674	$27,467
A600						**Subtotal**	**$5,735,975**		**$5,729,912**	2.47	**$14,152,883**	**$16,789,318**
K-701	2	1	Plant Air Compressor	1.00	$32,376	2002	$97,129	0.34	$97,129	2.47	$239,908	$283,936
M-701	1		Cooling Tower System	0.66	$267,316	2002	$267,316	0.78	$193,008	2.47	$476,730	$564,218
M-702	1		Hydraulic Truck Dump with Scale	1.00	$80,000	1998	$80,000	0.6	$80,000	2.47	$197,600	$237,526
M-703	1		Flue Gas Stack	0.31	$51,581	2002	$51,581	1	$15,917	2.47	$39,315	$46,530
P-701	1	1	Cooling Water Pump	0.66	$158,540	2002	$317,080	0.33	$276,264	2.47	$682,373	$807,601
P-702	1	1	Firewater Pump	1.00	$18,400	1997	$36,800	0.79	$36,800	2.47	$90,896	$110,110
P-703	1	1	Diesel Pump	1.00	$6,100	1997	$12,200	0.79	$12,200	2.47	$30,134	$36,504
P-704	1	1	Ammonia Pump	1.00	$5,000	1997	$10,000	0.79	$10,000	2.47	$24,700	$29,921
P-705	1		Hydrazine Pump	1.00	$5,500	1997	$5,500	0.79	$5,500	2.47	$13,585	$16,457
S-701	1	1	Instrument Air Dryer	1.00	$8,349	2002	$16,698	0.6	$16,698	2.47	$41,244	$48,813
T-701	1		Plant Air Receiver	1.00	$7,003	2002	$7,003	0.72	$7,003	2.47	$17,297	$20,472
T-702	1		Firewater Storage Tank	1.00	$166,100	1997	$166,100	0.51	$166,100	2.47	$410,267	$496,991
T-703	1		Diesel Storage Tank	1.00	$14,400	1997	$14,400	0.51	$14,400	2.47	$35,568	$43,086
T-704	1		Ammonia Storage Tank	1.00	$287,300	1997	$287,300	0.72	$287,300	2.47	$709,631	$859,635
T-705	1		Olivine Lock Hopper	1.00	$0	1998	$0	0.71	$0	2.47	$0	$0
T-706	1		MgO Lock Hopper	1.00	$0	1998	$0	0.71	$0	2.47	$0	$0
T-707	1		Hydrazine Storage Tank	1.00	$12,400	1997	$12,400	0.93	$12,400	2.47	$30,628	$37,102
A700						**Subtotal**	**$1,381,507**		**$1,230,719**	2.47	**$3,039,875**	**$3,601,800**
					Equipment Cost		**$40,920,110**		**$46,915,218**	2.467617439	**$115,768,810**	**$137,228,869**

Appendix F

Discounted Cash Flow Rate of Return Summary

DCFROR Worksheet													
Year		-2	-1	0	1	2	3	4	5	6	7	8	9
Fixed Capital Investment		$18,603,984	$114,503,967	$61,068,782									
Working Capital				$9,541,997									
Loan Payment					$0	$0	$0	$0	$0	$0	$0	$0	$0
Loan Interest Payment		$0	$0	$0	$0	$0	$0	$0	$0	$0	$0	$0	$0
Loan Principal		$0	$0	$0	$0	$0	$0	$0	$0	$0	$0	$0	$0
Ethanol Sales					$46,938,097	$62,584,129	$62,584,129	$62,584,129	$62,584,129	$62,584,129	$62,584,129	$62,584,129	$62,584,129
By-Product Credit					$9,633,280	$12,844,373	$12,844,373	$12,844,373	$12,844,373	$12,844,373	$12,844,373	$12,844,373	$12,844,373
Total Annual Sales					$56,571,377	$75,428,503	$75,428,503	$75,428,503	$75,428,503	$75,428,503	$75,428,503	$75,428,503	$75,428,503
Annual Manufacturing Cost													
Raw Materials					$23,647,650	$27,025,885	$27,025,885	$27,025,885	$27,025,885	$27,025,885	$27,025,885	$27,025,885	$27,025,885
Tar reforming catalysts					$808,613								
Steam reforming catalysts					$0					$0			
ZnO					$0					$0			
Mixed Alcohol catalysts					$542,966	$0	$0	$0	$0	$542,966	$0	$0	$0
Baghouse Bags					$415,430					$415,430			
Other Variable Costs					$1,531,320	$1,732,166	$1,732,166	$1,732,166	$1,732,166	$1,732,166	$1,732,166	$1,732,166	$1,732,166
Fixed Operating Costs					$12,059,682	$12,059,682	$12,059,682	$12,059,682	$12,059,682	$12,059,682	$12,059,682	$12,059,682	$12,059,682
Total Product Cost					$39,005,661	$40,817,733	$40,817,733	$40,817,733	$40,817,733	$41,776,129	$40,817,733	$40,817,733	$40,817,733
Annual Depreciation													
General Plant													
B					$38,064,676	$27,189,054	$19,420,753	$13,871,967	$9,908,548	$7,077,534	$5,055,381		
DD L					$19,032,338	$15,860,282	$13,594,527	$12,137,971	$11,559,972	$11,559,972	$11,559,972		
S e					$95,161,690	$67,972,636	$48,551,883	$34,679,916	$24,771,369	$17,693,835	$12,638,453		
Remaining Valu					$38,064,676	$27,189,054	$19,420,753	$13,871,967	$11,559,972	$11,559,972	$11,559,972		
Actual													
Steam Plant													
B					$4,321,018	$3,996,942	$3,697,171	$3,419,883	$3,163,392	$2,926,138	$2,706,677	$2,503,677	$2,315,901
DDL					$2,880,679	$2,804,872	$2,738,645	$2,682,262	$2,636,160	$2,601,011	$2,577,788	$2,567,873	$2,567,873
S e					$53,292,560	$49,295,618	$45,598,446	$42,178,563	$39,015,171	$36,089,033	$33,382,355	$30,878,679	$28,562,778
Remaining Valu					$4,321,018	$3,996,942	$3,697,171	$3,419,883	$3,163,392	$2,926,138	$2,706,677	$2,567,873	$2,567,873
Net Revenue					($24,819,978)	$3,424,773	$11,492,845	$17,318,919	$19,887,405	$19,166,264	$20,344,120	$32,042,896	$32,042,896
Losses Forward						($24,819,978)	($21,395,205)	($9,902,360)	$0	$0	$0	$0	$0
Taxable Income					($24,819,978)	($21,395,205)	($9,902,360)	$7,416,559	$19,887,405	$19,166,264	$20,344,120	$32,042,896	$32,042,896
Income Tax					$0	$0	$0	$2,892,458	$7,756,088	$7,474,843	$7,934,207	$12,496,729	$12,496,729
Annual Cash Income					$17,565,716	$34,610,769	$34,610,769	$31,718,311	$26,854,681	$26,177,531	$26,676,563	$22,114,040	$22,114,040
Discount Factor		1.21	1.1	1	0.909090909	0.826446281	0.751314801	0.683013455	0.620921323	0.56447393	0.513158118	0.46650738	0.424097618
Annual Present Value	$217,657,607				$15,968,833	$28,603,942	$26,003,583	$21,664,033	$16,674,644	$14,776,534	$13,689,295	$10,316,363	$9,378,512
Total Capital Investment + Interest		$22,510,821.23	$125,954,363.41	$70,610,779.49									
Net Present Worth				$0									

DCFROR Worksheet											
Year	10	11	12	13	14	15	16	17	18	19	20
Fixed Capital Investment											
Working Capital											($9,541,997)
Loan Payment	$0	$0	$0	$0	$0	$0	$0	$0	$0	$0	$0
	$0	$0	$0	$0	$0	$0	$0	$0	$0	$0	$0
Loan Interest Payment	$0	$0	$0	$0	$0	$0	$0	$0	$0	$0	$0
Loan Principal	$62,584,129	$62,584,129	$62,584,129	$62,584,129	$62,584,129	$62,584,129	$62,584,129	$62,584,129	$62,584,129	$62,584,129	$62,584,129
Ethanol Sales	$12,844,373	$12,844,373	$12,844,373	$12,844,373	$12,844,373	$12,844,373	$12,844,373	$12,844,373	$12,844,373	$12,844,373	$12,844,373
By-Product Credit	$75,428,503	$75,428,503	$75,428,503	$75,428,503	$75,428,503	$75,428,503	$75,428,503	$75,428,503	$75,428,503	$75,428,503	$75,428,503
Total Annual Sales											
Annual Manufacturing Cost											
	$27,025,885	$27,025,885	$27,025,885	$27,025,885	$27,025,885	$27,025,885	$27,025,885	$27,025,885	$27,025,885	$27,025,885	$27,025,885
Raw Materials											
Tar reforming catalysts		$0					$0				
Steam reforming catalysts		$0					$0				
ZnO	$0	$542,966	$0	$0	$0	$0	$542,966	$0	$0	$0	$0
Mixed Alcohol catalysts		$415,430					$415,430				
Baghouse Bags	$1,732,166	$1,732,166	$1,732,166	$1,732,166	$1,732,166	$1,732,166	$1,732,166	$1,732,166	$1,732,166	$1,732,166	$1,732,166
Other Variable Costs	$12,059,682	$12,059,682	$12,059,682	$12,059,682	$12,059,682	$12,059,682	$12,059,682	$12,059,682	$12,059,682	$12,059,682	$12,059,682
Fixed Operating Costs	$40,817,733	$41,776,129	$40,817,733	$40,817,733	$40,817,733	$40,817,733	$41,776,129	$40,817,733	$40,817,733	$40,817,733	$40,817,733
Total Product Cost											
Annual Depreciation											
General Plant											
DD L											
S e											
Remaining Valu											
Actual											
Steam Plant	$2,142,208	$1,981,543	$1,832,927	$1,695,457	$1,568,298	$1,450,676	$1,341,875	$1,241,234	$1,148,142	$1,062,031	$982,379
DDL	$2,567,873	$2,567,873	$2,567,873	$2,567,873	$2,567,873	$2,567,873	$2,567,873	$2,567,873	$2,567,873	$2,567,873	$2,567,873
S e	$26,420,570	$24,439,027	$22,606,100	$20,910,642	$19,342,344	$17,891,668	$16,549,793	$15,308,559	$14,160,417	$13,098,386	$12,116,007
Remaining Valu	$2,567,873	$2,567,873	$2,567,873	$2,567,873	$2,567,873	$2,567,873	$2,567,873	$2,567,873	$2,567,873	$2,567,873	$2,567,873
Net Revenue	$32,042,896	$31,084,500	$32,042,896	$32,042,896	$32,042,896	$32,042,896	$31,084,500	$32,042,896	$32,042,896	$32,042,896	$32,042,896
Losses Forward	$0	$0	$0	$0	$0	$0	$0	$0	$0	$0	$0
Taxable Income	$32,042,896	$31,084,500	$32,042,896	$32,042,896	$32,042,896	$32,042,896	$31,084,500	$32,042,896	$32,042,896	$32,042,896	$32,042,896
Income Tax	$12,496,729	$12,122,955	$12,496,729	$12,496,729	$12,496,729	$12,496,729	$12,122,955	$12,496,729	$12,496,729	$12,496,729	$12,496,729
Annual Cash Income	$22,114,040	$21,529,419	$22,114,040	$22,114,040	$22,114,040	$22,114,040	$21,529,419	$22,114,040	$22,114,040	$22,114,040	$22,114,040
Discount Factor	0.385543289	0.350493899	0.318630818	0.28966438	0.263331254	0.239392049	0.217629136	0.197844669	0.17985879	0.163507991	0.148643628
Annual Present Value	$8,525,920	$7,545,930	$7,046,215	$6,405,650	$5,823,318	$5,293,925	$4,685,429	$4,375,145	$3,977,404	$3,615,822	$3,287,111
Total Capital Investment + Interest											($1,418,357.09)
Net Present Worth											

Ethanol from Mixed Alcohols Production Process Engineering Analysis

2012 Market Target Case
2,000 Dry Metric Tonnes Biomass per Day
BCL Gasifier, Tar Reformer, Sulfur Removal, MoS2 Catalyst, Fuel Purification, Steam-Power Cycle
All Values in 2005$

Minimum Ethanol Selling Price ($/gal) **$1.01**

EtOH Production at Operating Capacity (MM Gal / year)	61.8
EtOH Product Yield (gal / Dry US Ton Feedstock)	80.1
Mixed Alcohols Production at Operating Capacity (MM Gal / year)	72.6
Mixed Alcohols Product Yield (gal / Dry US Ton Feedstock)	94.1
Delivered Feedstock Cost $/Dry US Ton	$35
Internal Rate of Return (After-Tax)	10%
Equity Percent of Total Investment	100%

Capital Costs	
Feed Handling & Drying	$23,200,000
Gasification	$12,900,000
Tar Reforming & Quench	$38,400,000
Acid Gas & Sulfur Removal	$14,500,000
Alcohol Synthesis - Compression	$16,000,000
Alcohol Synthesis - Other	$4,600,000
Alcohol Separation	$7,200,000
Steam System & Power Generation	$16,800,000
Cooling Water & Other Utilities	$3,600,000
Total Installed Equipment Cost	$137,200,000
Indirect Costs	53,600,000
(% of TPI)	28.1%
Project Contingency	4,100,000
Total Project Investment (TPI)	$190,800,000
Installed Equipment Cost per Annual Gallon	$2.22
Total Project Investment per Annual Gallon	$3.09
Loan Rate	N/A
Term (years)	N/A
Capital Charge Factor	0.180
Maximum Yields based on carbon content	
Theoretical Ethanol Production (MM gal/yr)	158.9
Theoretical Ethanol Yield (gal/dry ton)	205.8
Current Ethanol Yield (Actual/Theoretical)	39%
Gasifier Efficiency - HHV %	76.6
Gasifier Efficiency - LHV %	76.1
Overall Plant Efficiency - HHV %	47.4
Overall Plant Efficiency - LHV %	45.8
Plant Hours per year	8406
%	96.0%

Operating Costs (cents/gal product)	
Feedstock	43.7
Natural Gas	0.0
Catalysts	0.3
Olivine	0.7
Other Raw Materials	1.6
Waste Disposal	0.4
Electricity	0.0
Fixed Costs	19.5
Co-product credits	-20.7
Capital Depreciation	15.4
Average Income Tax	11.8
Average Return on Investment	28.5

Operating Costs ($/yr)	
Feedstock	$27,000,000
Natural Gas	$0
Catalysts	$200,000
Olivine	$400,000
Other Raw Matl. Costs	$300,000
Waste Disposal	$300,000
Electricity	$0
Fixed Costs	$12,100,000
Co-product credits @ $1.15 per gal	-$12,800,000
Capital Depreciation	$9,500,000
Average Income Tax	$7,300,000
Average Return on Investment	$17,600,000
Total Plant Electricity Usage (KW)	7,994
Electricity Produced Onsite (KW)	7,998
Electricity Purchased from Grid (KW)	0
Electricity Sold to Grid (KW)	4
Steam Plant + Turboexpander Power Generated (hp)	66,451
Used for Main Compressors (hp)	55,168
Used for Electricity Generation (hp)	11,283
Plant Electricity Use (KWh/gal product)	1.5
Gasification & Reforming Steam Use (lb/gal)	9.9

Appendix G

Process Parameters & Operation Summary

Energy Efficiencies	
Gasifier Efficiency - HHV %	76.6
Gasifier Efficiency - LHV %	76.1
Overall Plant Efficiency - HHV %	47.4
Overall Plant Efficiency - LHV %	45.8
Dryer	
Inlet:	
Temperature (°F)	60.0
Moisture Content (wt%)	50.0%
Outlet:	
Temperature (°F)	219.7
Moisture Content (wt%)	5.0%
Inlet Flue Gas (°F)	1,206
Outlet Flue Gas (°F)	235.9
Dew Point Flue Gas (°F)	173.9
Difference	62.0
Gasifier	
Temperature (°F)	1,633
Pressure (psia)	23.0
H2:CO Molar Ratio After Gasifier	0.60
Methane (vol%)	9.0%
Benzene (vol%)	0.07%
Tar (wt%)	0.91%
Tar (g/Nm³)	9.5
Char (wt%)	12.7%
H2S (ppm)	413
Residual Heat (MBtu/hr)	0
Char Combustor	
Temperature (°F)	1,823
Pressure (psia)	21.4
Ratio Actual:Minimum air for combustion	1.20
Residual Heat (MBtu/hr)	0.0
Syngas Usage	
To Reformer (lb/hr)	168,120
To Char Combustor (lb/hr)	0
To Fuel System (lb/hr)	64,703
Fuel System	
Additional fuel (lb/hr)	0
Raw Syngas (lb/hr)	64,703
Unconverted Syngas (lb/hr)	10,739
Into Reformer (°F)	3,680
Out of Reformer (°F)	1,780

Tar Reformer	
Inlet Molar Flow (MMscf/hr)	6.70
Space Velocity (hr^{-1})	2,476
Reactor Volume (ft³)	2,705
Inlet:	
Temperature (°F)	1,086
Carbon as CO (mol%)	49.0%
Carbon as tar (ppmv)	5,758
H2:CO Ratio (mole)	0.87
Reformer Conversions:	
CO2 --> CO	32.5%
Methane --> CO	80.0%
Ethane --> CO	99.0%
Ethylene --> CO	90.0%
Benzene --> CO	99.0%
Tar --> CO	99.9%
Ammonia --> CO	90.0%
Outlet:	
Temperature (°F)	1,633
Carbon as CO (mol%)	75.7%
Carbon as tar (ppmv)	43
H2:CO Ratio (mole)	**1.00**
Methane (vol%)	1.2%
Benzene (ppmv)	2.7
Tars (ppmv)	3
Tars (g/Nm³)	0.01
H2S (ppm)	205
NH3 (ppm)	80
Quench	
Benzene (ppmv)	3.1
Tars (ppmv)	4
Tars (g/Nm³)	0.01
H2S (ppm)	235
NH3 (ppm)	83
Acid Gas Removal	
Inlet:	
CO2 (mol/hr)	2,041
CO2 (mol%)	11.4%
H2S (mol/hr)	4
H2S (ppmv)	235
Outlet:	
CO2 (mol/hr)	846
CO2 (mol%)	5.1%
Fraction CO2 removed	58.6%
H2S (mol/hr)	1
H2S (ppmv)	49
Fraction H2S removed	99.6%

Alcohol Synthesis	
Syngas from Conditioning	279,888
Recycled from initial flash tank	215
Recycled from MolSieve Flush	5,026
Total	285,128
Conditioned Syngas H2:CO Ratio	1.00
Recycled Gas H2:CO Ratio	1.06
At Reactor Inlet	
Temperature (°F)	570
Pressure (psia)	991
H2:CO Molar Ratio	1.00
CO2 (mol %)	5.0%
Methane (mol%)	1.5%
H2O (wt%)	0.64%
Inlet Molar Flow (MMscf/hr)	6.5
Space Velocity (hr^{-1})	4,000
Reactor Volume (ft³)	1,616
CO Conversion - Overall	59.5%
CO Conversion - Singlepass	59.4%
Conversion To:	
CO2	21.9%
Methane	3.4%
Ethane	0.3%
Methanol	0.3%
Ethanol	28.2%
Propanol	4.6%
Butanol	0.6%
Pentanol +	0.1%
Total	59.4%
Selectivity (CO2 Free)	
Alcohols	90.1%
Hydrocarbons	9.9%
At Reactor Outlet	
Temperature (°F)	570
Pressure (psia)	986
CO2 (mol%)	22.7%
Methane (mol%)	4.6%
H2O (wt%)	0.47%
Total Alcohol Productivity (kg/kg/hr)	0.602
Total Ethanol Productivity (kg/kg/hr)	0.488

Alcohol Synthesis	
Relative Alcohol Distribution After Reactor	
Methanol	8.5%
Ethanol	81.7%
Propanol	8.8%
Butanol	0.9%
Pentanol +	0.1%
Flash Separator	
Temperature (°F)	110
Pressure (psia)	970
Relative Alcohol Distribution After Flash Tank	
Methanol	8.3%
Ethanol	81.7%
Propanol	8.9%
Butanol	0.9%
Pentanol +	0.1%
Vapor Losses From Flash Tank	
Methanol	3.5%
Ethanol	1.8%
Propanol	0.8%
Butanol	0.3%
Pentanol +	0.1%
Cleaned Gas Recycled to Reactor	0.1%
Residual Syngas	
Recycled to synthesis reactors (lb/hr)	215
To Tar Reformers (lb/hr)	214,787
To Fuel System (lb/hr)	10,739
To Reformer for Process (lb/hr)	204,048
Overall Water Demand	
gal/gal etoh	1.94
gal/gal total alcohols	1.65

Appendix H

Process Flow Diagrams (PFDs)

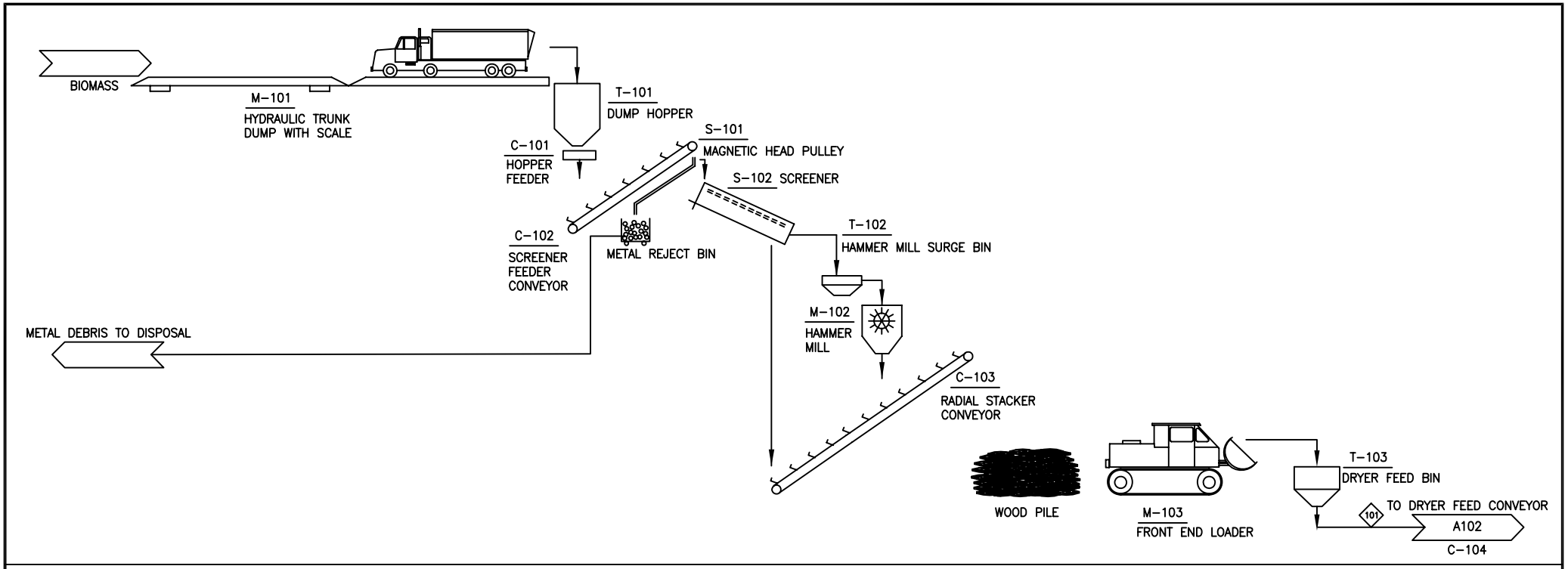

COMPONENT	UNITS	101
Total Flow	lb/hr	367,437
Temperature	F	60
Pressure	Psia	14.7
Vapor Fraction		0.00
Hydrogen	lb/hr	
Water	lb/hr	183,718
Carbon Monoxide	lb/hr	
Nitrogen	lb/hr	
Oxygen	lb/hr	
Argon	lb/hr	
Carbon Dioxide	lb/hr	
Hydrogen Sulfide (H2S)	lb/hr	
SO2	lb/hr	
Ammonia (NH3)	lb/hr	
NO2	lb/hr	
Methane	lb/hr	
isobutane	lb/hr	
n-butane	lb/hr	
ethane (C2H6)	lb/hr	
ethylene (C2H4)	lb/hr	
acetylene (C2H2)	lb/hr	
C3H8	lb/hr	
Pentane +	lb/hr	
Benzene (C6H6)	lb/hr	
Tar (C10H8)	lb/hr	
Carbon (Solid)	lb/hr	
Sulfur (Solid)	lb/hr	
Olivine (Solid)	lb/hr	
MgO (Solid)	lb/hr	
Methanol	lb/hr	
Ethanol	lb/hr	
Propanol	lb/hr	
n-Butanol	lb/hr	
Pentanol+	lb/hr	
Ash	lb/hr	0
Char	lb/hr	0
Wood	lb/hr	183,718
Enthalpy Flow	MMBTU/	-1,699
Average Density	lb/ft^3	

Heat Stream No.	MM BTU/hr	Work Stream No.	HP

Eq. No.	Equipment Name	Req.	Spar	Equipment Type
C-101	Hopper Feeder	4		VIBRATING-FEEDER
C-102	Screener Feeder Conveyor	2		BELT
C-103	Radial Stacker Conveyor	2		BELT
M-101	Hydraulic Truck Dump with Scale	4		TRUCK-SCALE
M-102	Hammermill	2		
M-103	Front End Loaders	3		LOADER
S-101	Magnetic Head Pulley	2		MAGNET
S-102	Screener	2		SCREEN
T-101	Dump Hopper	4		LIVE-BTM-BIN
T-102	Hammermill Surge Bin	1		LIVE-BTM-BIN
T-103	Dryer Feed Bin	2		LIVE-BTM-BIN

VER	DESCRIPTION	DATE
A	Thermochemical Design Report	3-10-04
B		8-25-04
C		9-15-04
D		11-17-04
E	TC Ethanol Design Report	12-17-06
		AA 12-17-06

NREL NATIONAL RENEWABLE ENERGY LABORATORY
National Bioenergy Center

SECTION A100
FEED HANDLING & DRYING

sp0612L | PFD-P800-A101 | E

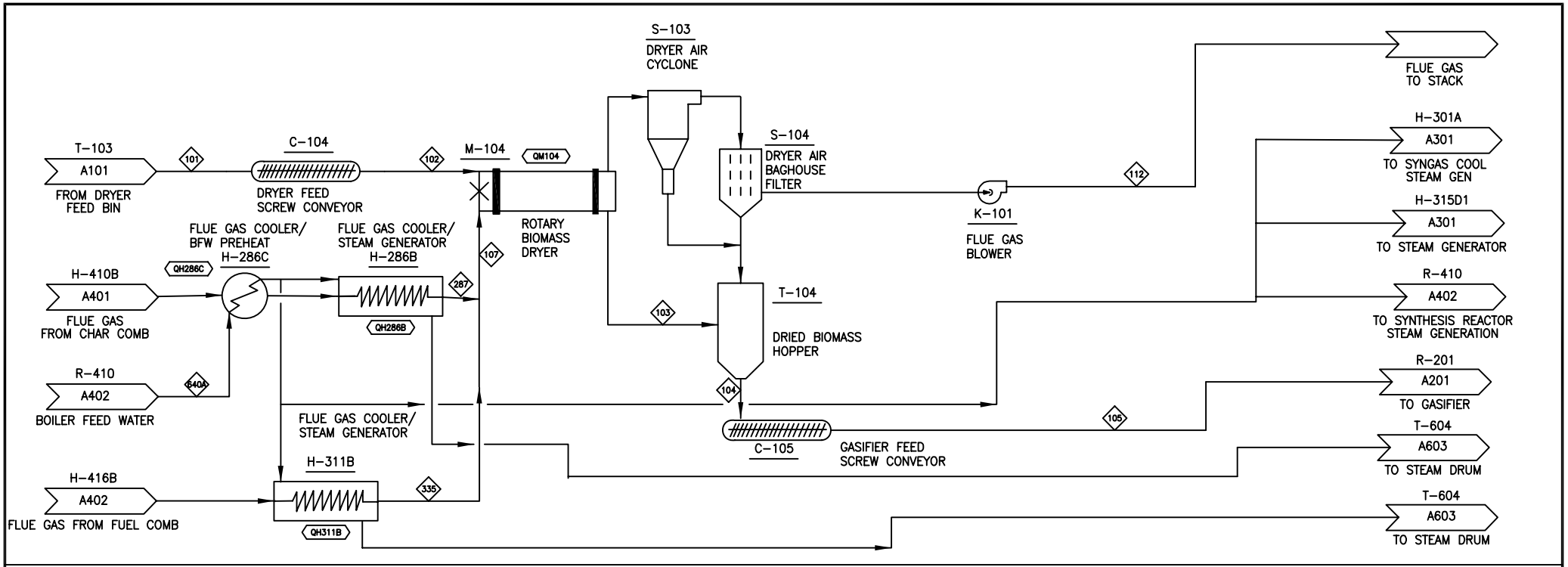

COMPONENT	UNITS	101	102	103	104	105	107	112	287	335	640A
Total Flow	lb/hr	367,437	367,437	193,388	193,388	193,388	824,795	998,844	462,457	362,339	348,198
Temperature	F	60	60	220	220	220	1,206	236	1,100	1,329	527
Pressure	Psia	14.7	15.7	15.7	15.7	25.0	16.5	15.5	21.9	16.5	875.0
Vapor Fraction		0.00	0.00	0.00	0.00	0.00	1.00	1.00	1.00	1.00	0.00
Hydrogen	lb/hr										
Water	lb/hr	183,718	183,718	9,669	9,669	9,669	81,151	255,200	25,664	55,487	348,198
Carbon Monoxide	lb/hr										
Nitrogen	lb/hr						531,383	531,383	318,734	212,649	
Oxygen	lb/hr						24,215	24,215	16,278	7,936	
Argon	lb/hr						9,059	9,059	5,436	3,623	
Carbon Dioxide	lb/hr						178,591	178,591	96,318	82,273	
Hydrogen Sulfide (H2S)	lb/hr										
SO2	lb/hr						114	114	27	86	
Ammonia (NH3)	lb/hr										
NO2	lb/hr						269	269	0	269	
Methane	lb/hr										
isobutane	lb/hr										
n-butane	lb/hr										
ethane (C2H6)	lb/hr										
ethylene (C2H4)	lb/hr										
acetylene (C2H2)	lb/hr										
C3H8	lb/hr										
Pentane +	lb/hr										
Benzene (C6H6)	lb/hr										
Tar (C10H8)	lb/hr										
Carbon (Solid)	lb/hr										
Sulfur (Solid)	lb/hr										
Olivine (Solid)	lb/hr						14	14		14	
MgO (Solid)	lb/hr										
Methanol	lb/hr										0
Ethanol	lb/hr										
Propanol	lb/hr										
n-Butanol	lb/hr										
Pentanol+	lb/hr										
Ash	lb/hr	0	0	0	0	0	0	0		0	
Char	lb/hr	0	0	0	0	0	1	1		1	
Wood	lb/hr	183,718	183,718	183,718	183,718	183,718	0	0		0	
Enthalpy Flow	MMBTU/	-1,699	-1,699	-481	-481	-481	-897	-2,115	-393	-504	-2,211
Average Density	lb/ft^3										

Heat Stream No.	MM BTU/hr	Work Stream No.	HP
QM104	-224.09		
QH286B	93.47		
QH286C	0.63		
QH311B	32.83		

Eq. No.	Equipment Name	Req.	Spar	Equipment Type
C-104	Dryer Feed Screw Conveyor	2		SCREW
C-105	Gasifier Feed Screw Conveyor	2		SCREW
H-286B	Flue Gas Cooler/Steam Generator #1	1		SHELL-TUBE
H-286C	Flue Gas Cooler /Boiler Water Preheater #1	1		SHELL-TUBE
H-311B	Flue Gas Cooler / Steam Generator #3	1		SHELL-TUBE
K-101	Flue Gas Blower	2		CENTRIFUGAL
M-104	Rotary Biomass Dryer	2		ROTARY-DRUM
S-103	Dryer Air Cyclone	2		GAS CYCLONE
S-104	Dryer Air Baghouse Filter	2		FABRIC-FILTER
T-104	Dried Biomass Hopper	2		VERTICAL-VESSEL

VER	DESCRIPTION	DATE
A	Thermochemical Design Report	3-10-04
B		8-25-04
C		9-16-04
D		11-17-04
E	TC Ethanol Design Report	12-17-06
		NA 12-17-06

NREL NATIONAL RENEWABLE ENERGY LABORATORY
National Bioenergy Center

SECTION A100
FEED HANDLING & DRYING

sp0612L | PFD-P800-A102 | E

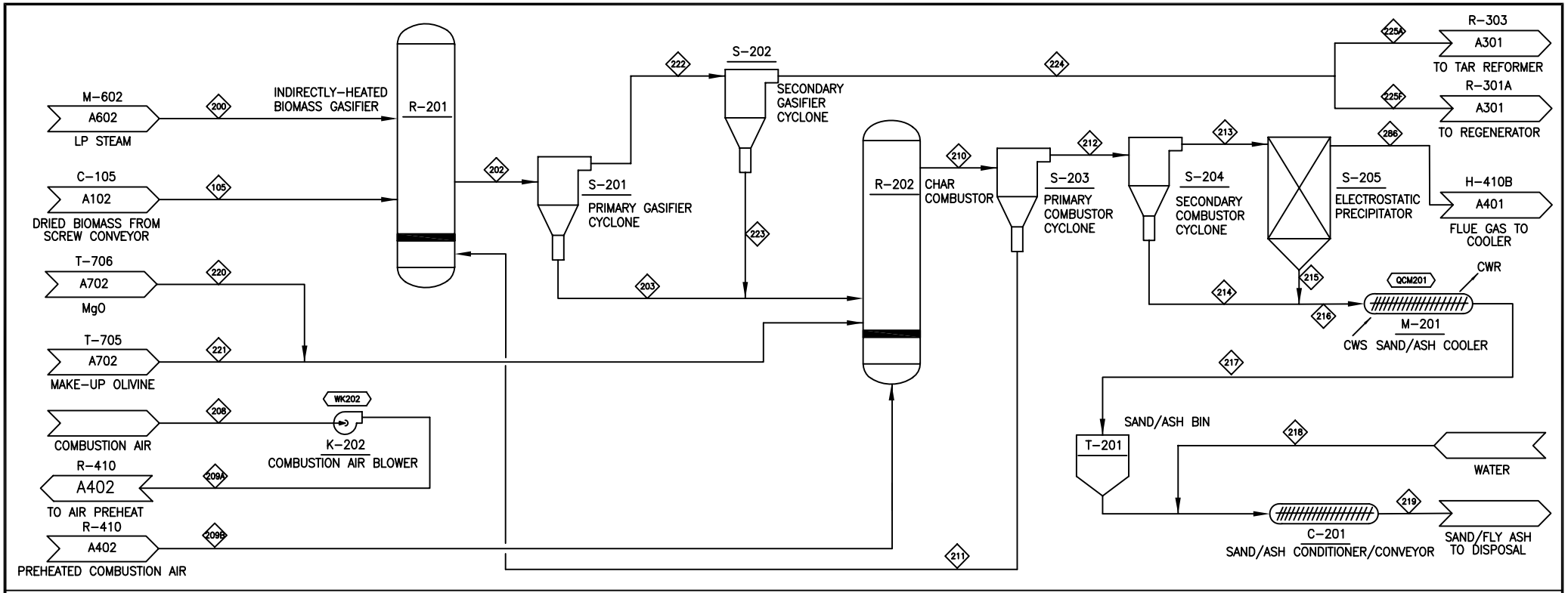

COMPONENT	UNITS	200	202	203	209A	209B	210	211	212	213	214	215	216	217	218	219	220	221	222	223	225A	225F	286
Total Flow	lb/hr	73,120	5,217,951	4,979,891	430,413	430,413	5,416,086	4,951,444	464,642	462,459	2,183	2	2,185	2,185	243	2,428	7	538	238,060	5,237	168,120	64,703	462,457
Temperature	F	383	1,633	1,633	185	400	1,823	1,823	1,823	1,823	1,823	1,823	1,823	300	60	206	60	60	1,633	1,633	1,633	1,633	1,823
Pressure	Psia	25.0	23.0	21.8	22.0	21.9	21.4	25.0	22.0	22.0	21.7	21.7	21.7	14.7	14.7	14.7	25.0	22.0	21.8	21.4	21.4	21.4	22.0
Vapor Fraction		1.00	1.00	0.00	1.00	1.00	1.00	0.00	1.00	1.00	0.00	0.00	0.00	0.00	0.00	0.00	1.00	1.00	1.00	0.00	1.00	1.00	1.00
Hydrogen	lb/hr		3,465																3,465		2,502	963	
Water	lb/hr	73,120	82,789		8,398	8,398	25,664		25,664	25,664					243	243			82,789		59,782	23,008	25,664
Carbon Monoxide	lb/hr		80,309																80,309		57,991	22,318	
Nitrogen	lb/hr				318,713	318,713	318,734		318,734	318,734													318,734
Oxygen	lb/hr				97,654	97,654	16,278		16,278	16,278													16,278
Argon	lb/hr				5,436	5,436	5,436		5,436	5,436													5,436
Carbon Dioxide	lb/hr		37,488		212	212	96,318		96,318	96,318									37,488		27,070	10,418	96,318
Hydrogen Sulfide (H2S)	lb/hr		161														0	0	161		116	45	
SO2	lb/hr						27		27	27													27
Ammonia (NH3)	lb/hr		355																355		256	99	
NO2	lb/hr						0		0	0													0
Methane	lb/hr		16,577																16,577		11,970	4,607	
isobutane	lb/hr																						
n-butane	lb/hr																						
ethane (C2H6)	lb/hr		474																474		342	132	
ethylene (C2H4)	lb/hr		7,971																7,971		5,756	2,215	
acetylene (C2H2)	lb/hr		753																753		544	209	
C3H8	lb/hr																						
Pentane +	lb/hr																						
Benzene (C6H6)	lb/hr		607																607		438	169	
Tar (C10H8)	lb/hr		1,822																1,822		1,315	506	
Carbon (Solid)	lb/hr																						
Sulfur (Solid)	lb/hr																						
Olivine (Solid)	lb/hr		4,951,355	4,946,403			4,951,850	4,951,355	495	0	495	0	495	495		495	7	538	4,951	4,902	36	14	
MgO (Solid)	lb/hr																						
Methanol	lb/hr																						
Ethanol	lb/hr																						
Propanol	lb/hr																						
n-Butanol	lb/hr																						
Pentanol+	lb/hr																						
Ash	lb/hr		0	0			1,779	89	1,690	2	1,688	2	1,690	1,690		1,690			0	0	0	0	
Char	lb/hr		33,826	33,488			0	0	0	0	0		0	0		0			338	335	2	1	
Wood	lb/hr		0	0															0	0	0	0	
Enthalpy Flow	MMBTU/	-412	1,337	1,950	-38	-15	1,937	2,230	-293	-293	0	0	0	0	-2	-2	0	0	-613	2	-444	-171	-293
Average Density	lb/ft^3																						

Heat Stream No.	MM BTU/hr	Work Stream No.	HP
QCM201	0.87	WK202	3916.8

Eq. No.	Equipment Name	Req.	Spar	Equipment Type
C-201	Sand/ash Conditioner/Conveyor	1		SCREW
K-202	Combustion Air Blower	2		CENTRIFUGAL
M-201	Sand/ash Cooler	2		MISCELLANEOUS
R-201	Indirectly-heated Biomass Gasifier	2		VERTICAL-VESSEL
R-202	Char Combustor	2		VERTICAL-VESSEL
S-201	Primary Gasifier Cyclone	2		GAS CYCLONE
S-202	Secondary Gasifier Cyclone	2		GAS CYCLONE
S-203	Primary Combustor Cyclone	2		GAS CYCLONE
S-204	Secondary Combustor Cyclone	2		GAS CYCLONE
S-205	Electrostatic Precipitator	2		MISCELLANEOUS
T-201	Sand/ash Bin	1		FLAT-BTM-STORAGE

VER	DESCRIPTION	DATE
A	Thermochemical Design Report	3-10-04
B		8-25-04
C		9-17-04
D		11-17-04
E	TC Ethanol Design Report	12-17-06
		AA 12-17-06

NREL NATIONAL RENEWABLE ENERGY LABORATORY
National Bioenergy Center

SECTION A200
GASIFICATION

sp0612L | PFD-P800-A201 | E

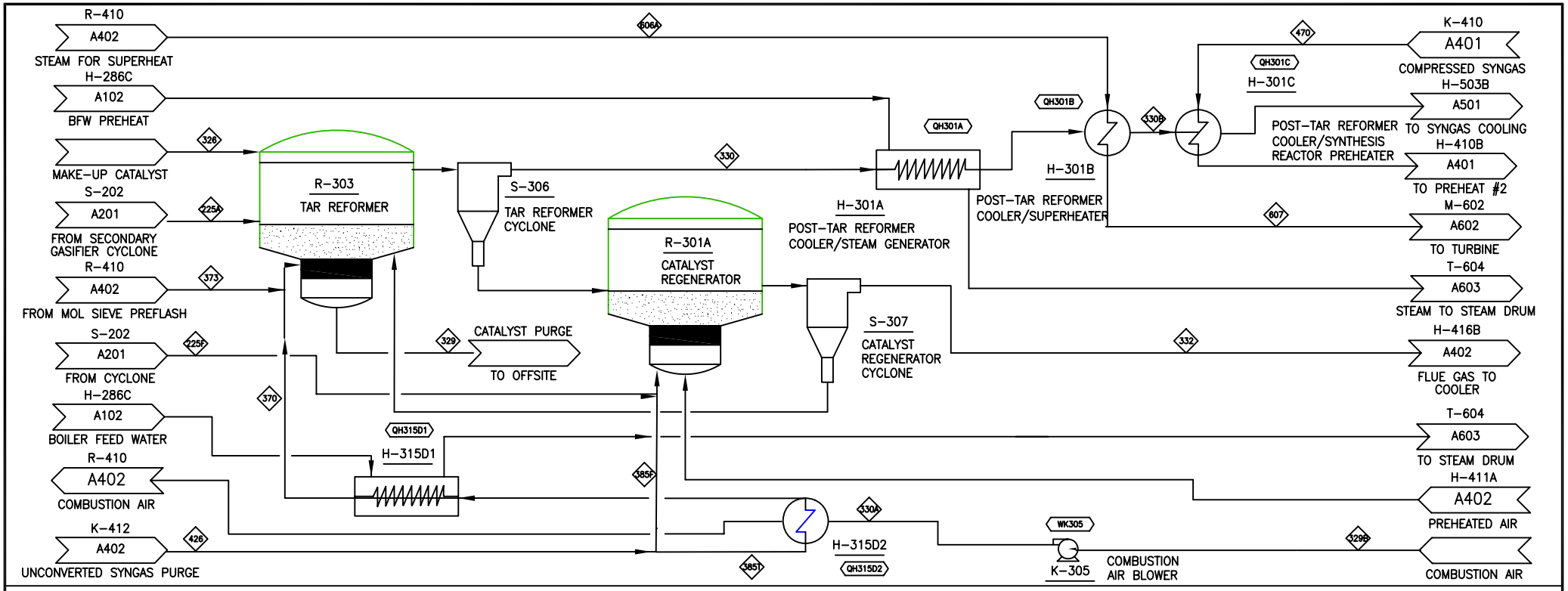

COMPONENT	UNITS	225A	225F	326	329	329B	330	330A	330B	332	370	373	385F	385T	426	470	606A	607
Total Flow	lb/hr	168,120	64,703	1	1	286,896	379,930	286,896	379,930	362,339	204,046	7,585	10,739	204,046	214,787	285,128	341,234	341,234
Temperature	F	1,633	1,633	60	1,633	90	1,633	131	570	1,780	527	527	648	648	648	186	527	900
Pressure	Psia	21.4	21.4	22.0	16.5	14.7	16.5	17.6	14.5	17.5	33.2	39.5	33.7	33.7	33.7	993.0	850.0	850.0
Vapor Fraction		1.00	1.00	0.00	0.00	1.00	1.00	1.00	1.00	1.00	1.00	1.00	1.00	1.00	1.00	1.00	1.00	1.00
Hydrogen	lb/hr	2,502	963				15,501		15,501		6,323	16	333	6,323	6,656	15,508		
Water	lb/hr	59,782	23,008			5,598	48,123	5,598	48,123	55,487	11	21	1	11	12	1,820	341,234	341,234
Carbon Monoxide	lb/hr	57,991	22,318				215,478		215,478		82,591	409	4,347	82,591	86,938	215,565		
Nitrogen	lb/hr					212,441	4,168	212,441	4,168	212,649	3,946	15	208	3,946	4,153	4,173		
Oxygen	lb/hr					65,092		65,092		7,936								
Argon	lb/hr					3,623		3,623		3,623								
Carbon Dioxide	lb/hr	27,070	10,418			141	89,839	141	89,839	82,273	100,288	5,598	5,278	100,288	105,567	37,360		
Hydrogen Sulfide (H2S)	lb/hr	116	45				143		143		20	7	1	20	21	29		
SO2	lb/hr									86								
Ammonia (NH3)	lb/hr	256	99				28		28		17	8	1	17	18	32		
NO2	lb/hr									269								
Methane	lb/hr	11,970	4,607				3,954		3,954		7,709	93	406	7,709	8,115	3,963		
isobutane	lb/hr																	
n-butane	lb/hr						293		293		132	161	7	132	139	503		
ethane (C2H6)	lb/hr	342	132				7		7		307	16	16	307	324	7		
ethylene (C2H4)	lb/hr	5,756	2,215				636		636		571	35	30	571	601	637		
acetylene (C2H2)	lb/hr	544	209				60		60		54	3	3	54	57	60		
C3H8	lb/hr						1,598		1,598		1,003	595	53	1,003	1,055	1,796		
Pentane +	lb/hr						55		55		18	37	1	18	19	209		
Benzene (C6H6)	lb/hr	438	169				4		4		0	0	0	0	0	4		
Tar (C10H8)	lb/hr	1,315	506				1		1		0	0	0	0	0	1		
Carbon (Solid)	lb/hr																	
Sulfur (Solid)	lb/hr																	
Olivine (Solid)	lb/hr	36	14	1	1		36		36	14								
MgO (Solid)	lb/hr																	
Methanol	lb/hr						0		0		123	273	6	123	129	2,994		
Ethanol	lb/hr						0		0		879	189	46	879	925	468		
Propanol	lb/hr										51	10	3	51	54	0		
n-Butanol	lb/hr										2	0	0	2	2	0		
Pentanol+	lb/hr										0	0	0	0	0	0		
Ash	lb/hr	0	0				0		0	0								
Char	lb/hr	2	1				2		2	1								
Wood	lb/hr	0	0				0		0	0								
Enthalpy Flow	MMBTU/	-444	-171	0	0	-32	-739	-29	-922	-450	-512	-24	-26	-503	-529	-527	-1,935	-1,848
Average Density	lb/ft^3																	

Heat Stream No.	MM BTU/hr	Work Stream No.	HP
QH301A	79.55	WK305	1128.6
QH301B	93.79		
QH301C	41.33		
QH315D1	5.75		
QH315D2	3.14		

Eq. No.	Equipment Name	Req.	Spar	Equipment Type
H-301A	Post-tar Reformer Cooler / Steam Generator #2	1		SHELL-TUBE
H-301B	Reformer Flue Gas Cooler/Steam superheater	1		SHELL-TUBE
H-301C	Reformed Syngas cooler / Synthesis Reactor Preheat #1	1		SHELL-TUBE
K-305	Regenerator Combustion Air Blow er	1		CENTRIFUGAL
H-315D1	Recycle Syngas Cooler / Steam Generator #4	1		SHELL-TUBE
H-315D2	Recycle Syngas cooler #2 / Air preheat #1	1		SHELL-TUBE
R-301A	Tar Reformer Catalyst Regenerator	1		VERTICAL-VESSEL
R-303	Tar Reformer	1		VERTICAL-VESSEL
S-306	Tar Reformer Cyclone	1		GAS CYCLONE
S-307	Catalyst Regenerator Cyclone	1		GAS CYCLONE

VER	DESCRIPTION	DATE
A	Thermochemical Design Report	8-19-04
B		8-25-04
C		9-17-04
D		11-17-04
E	TC Ethanol Design Report	12-17-06
		NA 12-17-06

NREL NATIONAL RENEWABLE ENERGY LABORATORY
National Bioenergy Center

SECTION A300
TAR REFORMING,CLEANUP,&COMPRESSION

sp0612L | PFD-P800-A301 | E

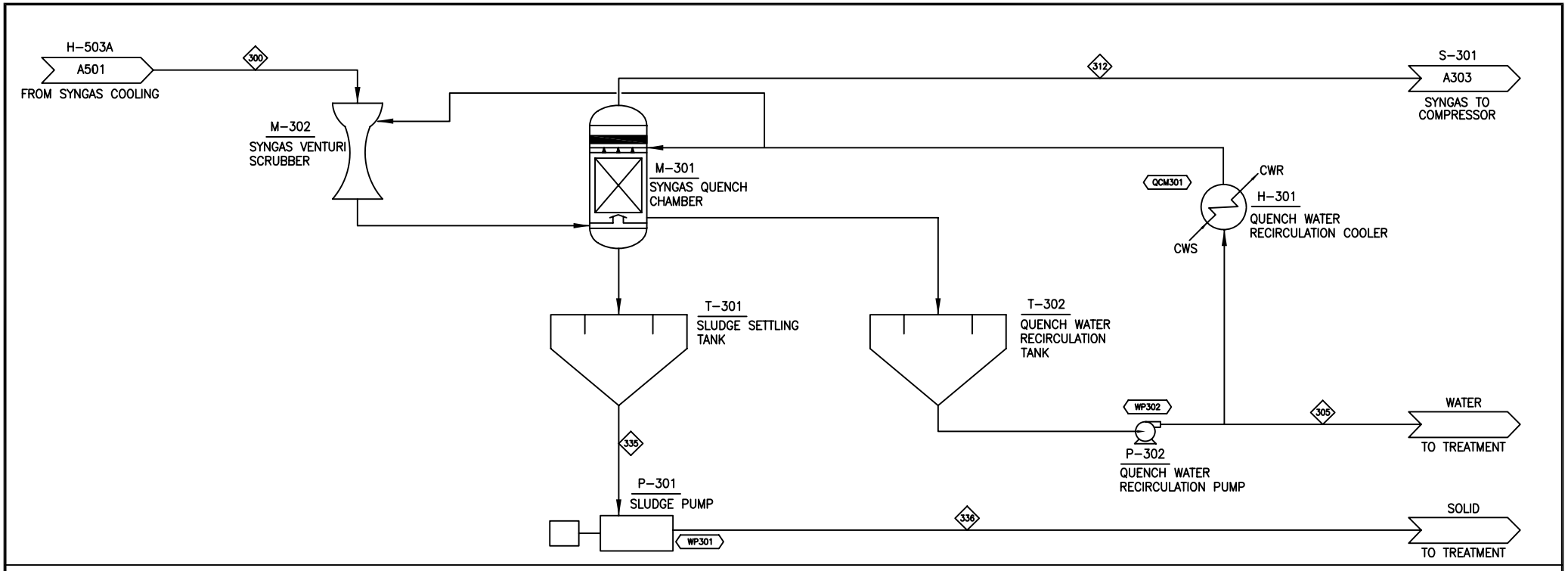

COMPONENT	UNITS	300	305	312	335	336
Total Flow	lb/hr	379,930	1,164	379,891	76	76
Temperature	F	140	111	130	111	111
Pressure	Psia	14.5	15.0	15.0	15.0	34.7
Vapor Fraction		1.00	0.00	1.00	0.00	0.00
Hydrogen	lb/hr	15,501	0	15,501		
Water	lb/hr	48,123	1,162	48,123	38	38
Carbon Monoxide	lb/hr	215,478	0	215,478		
Nitrogen	lb/hr	4,168	0	4,168		
Oxygen	lb/hr					
Argon	lb/hr					
Carbon Dioxide	lb/hr	89,839	0	89,839		
Hydrogen Sulfide (H2S)	lb/hr	143	0	143		
SO2	lb/hr					
Ammonia (NH3)	lb/hr	28	1	28		
NO2	lb/hr					
Methane	lb/hr	3,954	0	3,954		
isobutane	lb/hr					
n-butane	lb/hr	293	0	293		
ethane (C2H6)	lb/hr	7	0	7		
ethylene (C2H4)	lb/hr	636	0	636		
acetylene (C2H2)	lb/hr	60	0	60		
C3H6	lb/hr	1,598	0	1,598		
Pentane +	lb/hr	55	0	55		
Benzene (C6H6)	lb/hr	4	0	4		
Tar (C10H8)	lb/hr	1	0	1		
Carbon (Solid)	lb/hr					
Sulfur (Solid)	lb/hr					
Olivine (Solid)	lb/hr	36			36	36
MgO (Solid)	lb/hr					
Methanol	lb/hr	0	0	0		
Ethanol	lb/hr	0		0		
Propanol	lb/hr					
n-Butanol	lb/hr					
Pentanol+	lb/hr					
Ash	lb/hr	0			0	0
Char	lb/hr	2			2	2
Wood	lb/hr	0			0	0
Enthalpy Flow	MMBTU/	-989	-8	-991	0	0
Average Density	lb/ft^3					

Heat Stream No.	MM BTU/hr	Work Stream No.	HP
QCM301	1.51	WP301	0.0
		WP302	35.8

Eq. No.	Equipment Name	Req.	Spar	Equipment Type
H-301	Quench Water Recirculation Cooler	1		SHELL-TUBE
M-301	Syngas Quench Chamber	1		
M-302	Syngas Venturi Scrubber	1		
P-301	Sludge Pump	1	1	CENTRIFUGAL
P-302	Quench Water Recirculation Pump	1	1	CENTRIFUGAL
T-301	Sludge Settling Tank	1		CLARIFIER
T-302	Quench Water Recirculation Tank	1		HORIZONTAL-VESSEL

VER	DESCRIPTION	DATE
A	Thermochemical Design Report	3-20-04
B		8-25-04
C		9-17-04
D		11-17-04
E	TC Ethanol Design Report	12-17-06
		AA 12-17-06

NREL NATIONAL RENEWABLE ENERGY LABORATORY
National Bioenergy Center

SECTION A300
TAR REFORMING,CLEANUP,&COMPRESSION

sp0612L | PFD-P800-A302 | E

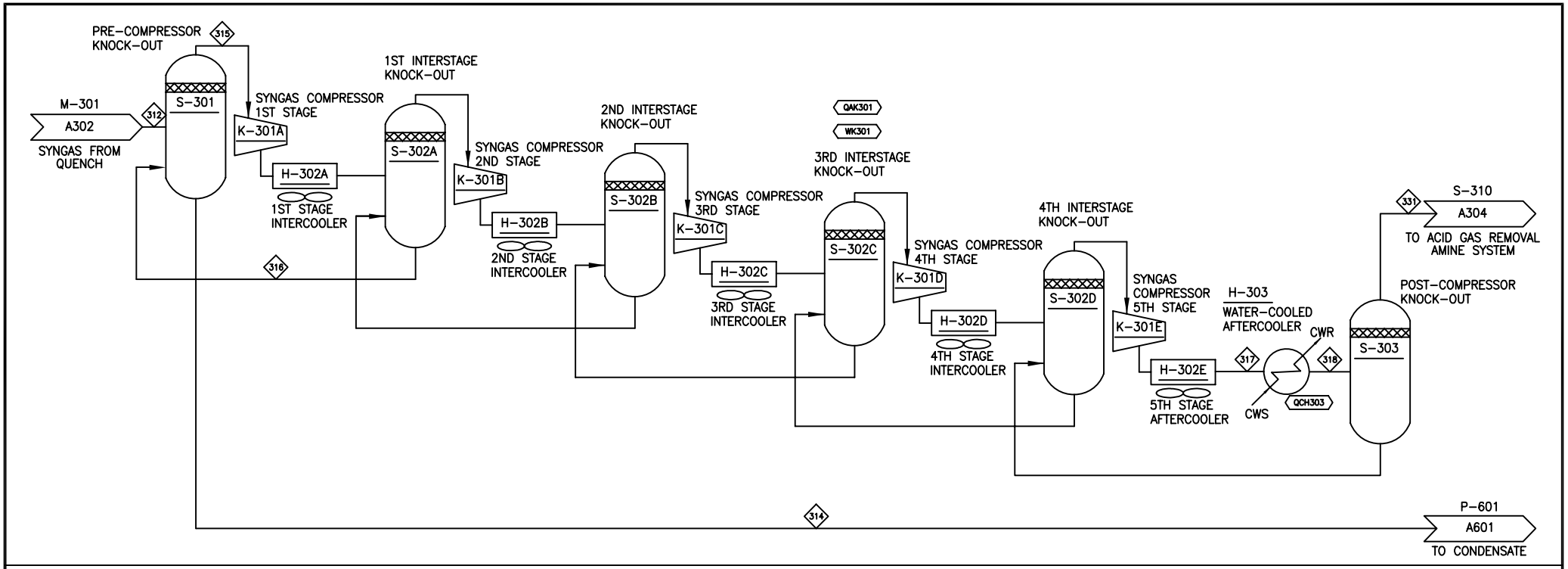

COMPONENT	UNITS	312	314	315	316	317	318	331
Total Flow	lb/hr	379,891	46,015	380,250	46,373	333,877	333,877	332,675
Temperature	F	130	69	132	140	140	110	110
Pressure	Psia	15.0	35.0	15.0	15.0	425.0	420.0	420.0
Vapor Fraction		1.00	0.00	1.00	0.00	1.00	1.00	1.00
Hydrogen	lb/hr	15,501	0	15,501	0	15,501	15,501	15,501
Water	lb/hr	48,123	46,013	48,475	46,365	2,111	2,111	910
Carbon Monoxide	lb/hr	215,478	0	215,478	0	215,478	215,478	215,478
Nitrogen	lb/hr	4,168	0	4,168	0	4,168	4,168	4,168
Oxygen	lb/hr							
Argon	lb/hr							
Carbon Dioxide	lb/hr	89,839	0	89,841	2	89,839	89,839	89,839
Hydrogen Sulfide (H2S)	lb/hr	143	0	143	0	143	143	143
SO2	lb/hr							
Ammonia (NH3)	lb/hr	28	1	33	6	27	27	25
NO2	lb/hr							
Methane	lb/hr	3,954	0	3,954	0	3,954	3,954	3,954
isobutane	lb/hr							
n-butane	lb/hr	293	0	293	0	293	293	293
ethane (C2H6)	lb/hr	7	0	7	0	7	7	7
ethylene (C2H4)	lb/hr	636	0	636	0	636	636	636
acetylene (C2H2)	lb/hr	60	0	60	0	60	60	60
C3H8	lb/hr	1,598	0	1,598	0	1,598	1,598	1,598
Pentane +	lb/hr	55	0	55	0	55	55	55
Benzene (C6H6)	lb/hr	4	0	4	0	4	4	4
Tar (C10H8)	lb/hr	1	0	1	0	1	1	1
Carbon (Solid)	lb/hr							
Sulfur (Solid)	lb/hr							
Olivine (Solid)	lb/hr							
MgO (Solid)	lb/hr							
Methanol	lb/hr	0	0	0	0	0	0	0
Ethanol	lb/hr	0		0		0	0	0
Propanol	lb/hr							
n-Butanol	lb/hr							
Pentanol+	lb/hr							
Ash	lb/hr							
Char	lb/hr							
Wood	lb/hr							
Enthalpy Flow	MMBTU/	-991	-314	-992	-316	-725	-731	-723
Average Density	lb/ft^3							

Heat Stream No.	MM BTU/hr	Work Stream No.	HP
QAK301	165.91	WK301	45746.9
QAK301A	40.57	WK301A	9202.1
QAK301B	43.23	WK301B	9963.1
QAK301C	30.85	WK301C	9007.0
QAK301D	27.07	WK301D	8976.4
QAK301E	24.19	WK301E	8598.3
QCH303	5.32		

Eq. No.	Equipment Name	Req.	Spar	Equipment Type
H-302	Syngas Compressor Intercoolers	5		AIR-COOLED EXCHANGER
H-303	Water-cooled Aftercooler	1		SHELL-TUBE
K-301	Syngas Compressor	1		CENTRIFUGAL
S-301	Pre-compressor Knock-out	1		KNOCK-OUT DRUM
S-302	Syngas Compressor Interstage Knock-outs	4		KNOCK-OUT DRUM
S-303	Post-compressor Knock-out	1		KNOCK-OUT DRUM

VER	DESCRIPTION	DATE
A	Thermochemical Design Report	3-20-04
B		8-25-04
C		9-17-04
D		11-17-04
E	TC Ethanol Design Report	12-17-06
		AA 12-17-06

NREL NATIONAL RENEWABLE ENERGY LABORATORY
National Bioenergy Center

SECTION A300
TAR REFORMING,CLEANUP,& COMPRESSION

sp0612L | PFD-P800-A303 | E

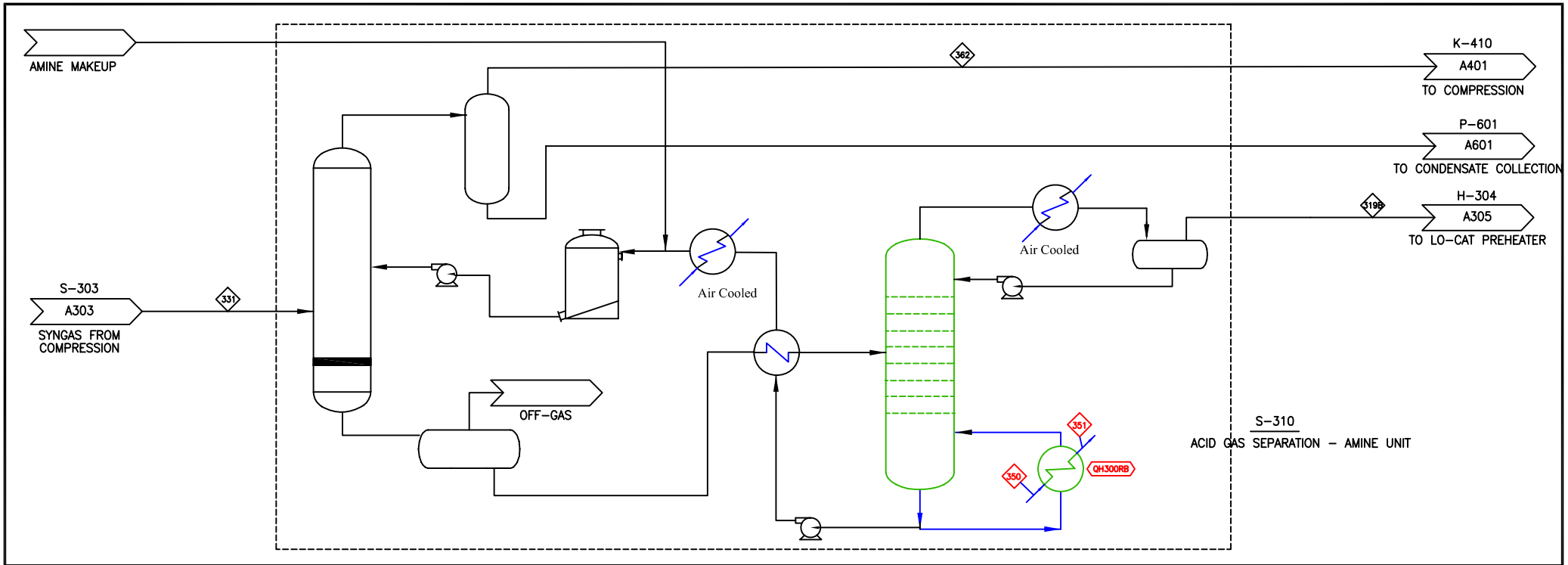

COMPONENT	UNITS	319B	331	350	351	362
Total Flow	lb/hr	52,720	332,675	135,784	135,784	279,888
Temperature	F	140	110	395	230	110
Pressure	Psia	35.0	420.0	64.7	59.7	415.0
Vapor Fraction		1.00	1.00	1.00	0.00	1.00
Hydrogen	lb/hr		15,501			15,501
Water	lb/hr		910	135,784	135,784	843
Carbon Monoxide	lb/hr		215,478			215,478
Nitrogen	lb/hr		4,168			4,168
Oxygen	lb/hr					
Argon	lb/hr					
Carbon Dioxide	lb/hr	52,605	89,839			37,234
Hydrogen Sulfide (H2S)	lb/hr	115	143			28
SO2	lb/hr					
Ammonia (NH3)	lb/hr		25			25
NO2	lb/hr					
Methane	lb/hr		3,954			3,954
isobutane	lb/hr					
n-butane	lb/hr		293			293
ethane (C2H6)	lb/hr		7			7
ethylene (C2H4)	lb/hr		636			636
acetylene (C2H2)	lb/hr		60			60
C3H8	lb/hr		1,598			1,598
Pentane +	lb/hr		55			55
Benzene (C6H6)	lb/hr		4			4
Tar (C10H8)	lb/hr		1			1
Carbon (Solid)	lb/hr					
Sulfur (Solid)	lb/hr					
Olivine (Solid)	lb/hr					
MgO (Solid)	lb/hr					
Methanol	lb/hr		0			0
Ethanol	lb/hr		0			0
Propanol	lb/hr					
n-Butanol	lb/hr					
Pentanol+	lb/hr					
Ash	lb/hr					
Char	lb/hr					
Wood	lb/hr					
Enthalpy Flow	MMBTU/	-202	-723	-766	-906	-520
Average Density	lb/ft^3					

Heat Stream No.	MM BTU/hr	Work Stream No.	HP
QH300RB	140.08		

Eq. No.	Equipment Name	Req.	Spar	Equipment Type
S-310	L.P. Amine System	1		ABSORBER

VER	DESCRIPTION	DATE
A	Thermochemical Design Report	3-20-04
B		8-25-04
C		9-17-04
D		11-17-04
E	TC Ethanol Design Report	12-17-06
		AA 12-17-06

NREL NATIONAL RENEWABLE ENERGY LABORATORY
National Bioenergy Center

SECTION A300
TAR REFORMING,CLEANUP,& COMPRESSION

sp0612L | PFD-P800-A304 | E

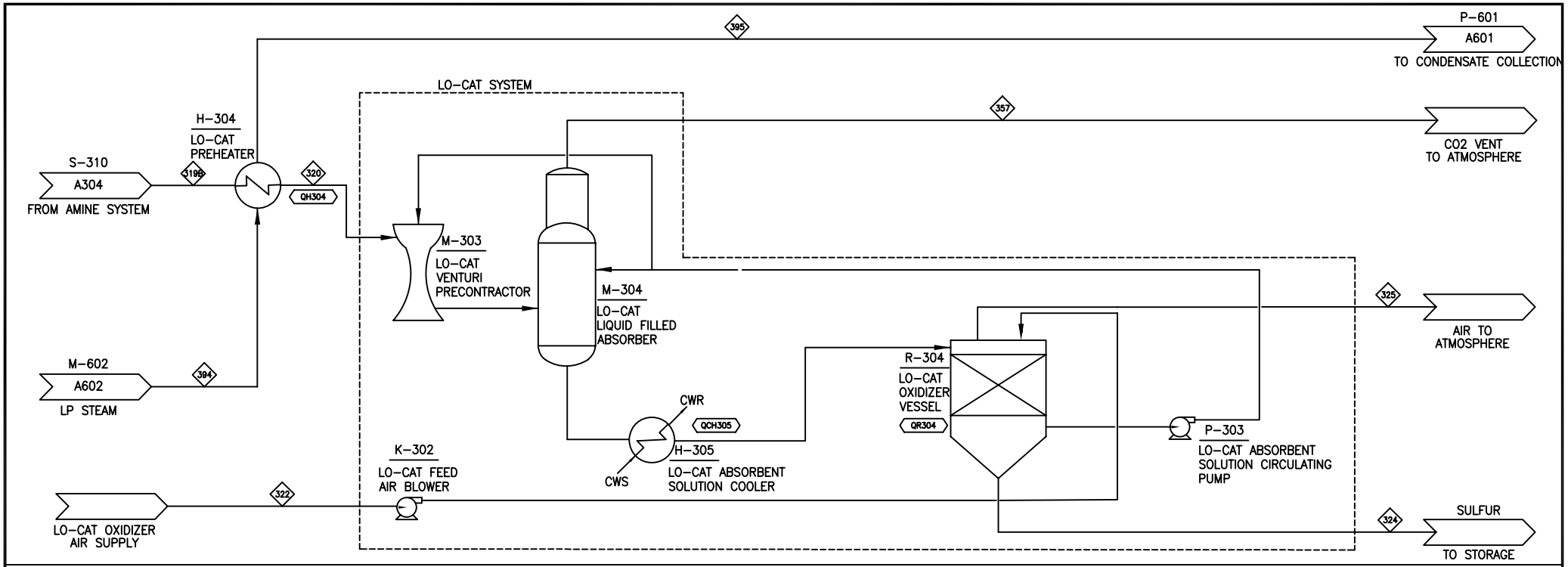

COMPONENT	UNITS	319B	320	322	324	325	357	394	395
Total Flow	lb/hr	52,720	52,720	261	108	268	52,605	114	114
Temperature	F	140	150	90	110	110	149	395	230
Pressure	Psia	35.0	30.0	14.7	14.7	14.7	25.0	64.7	59.7
Vapor Fraction		1.00	1.00	1.00	0.00	0.71	1.00	1.00	0.00
Hydrogen	lb/hr								
Water	lb/hr			5		66		114	114
Carbon Monoxide	lb/hr								
Nitrogen	lb/hr			194		194			
Oxygen	lb/hr			59		5			
Argon	lb/hr			3		3			
Carbon Dioxide	lb/hr	52,605	52,605	0		0	52,605		
Hydrogen Sulfide (H2S)	lb/hr	115	115				0		
SO2	lb/hr								
Ammonia (NH3)	lb/hr								
NO2	lb/hr								
Methane	lb/hr								
isobutane	lb/hr								
n-butane	lb/hr								
ethane (C2H6)	lb/hr								
ethylene (C2H4)	lb/hr								
acetylene (C2H2)	lb/hr								
C3H8	lb/hr								
Pentane +	lb/hr								
Benzene (C6H6)	lb/hr								
Tar (C10H8)	lb/hr								
Carbon (Solid)	lb/hr								
Sulfur (Solid)	lb/hr				108				
Olivine (Solid)	lb/hr								
MgO (Solid)	lb/hr								
Methanol	lb/hr								
Ethanol	lb/hr								
Propanol	lb/hr								
n-Butanol	lb/hr								
Pentanol+	lb/hr								
Ash	lb/hr								
Char	lb/hr								
Wood	lb/hr								
Enthalpy Flow	MMBTU/	-202	-202	0	0	0	-202	-1	-1
Average Density	lb/ft^3								

Heat Stream No.	MM BTU/hr	Work Stream No.	HP
QCH305	0.03		
QH304	-0.12		
QR304	0.38		

Eq. No.	Equipment Name	Req.	Spar	Equipment Type
H-304	LO-CAT Preheater	1		SHELL-TUBE
H-305	LO-CAT Absorbent Solution Cooler	1		SHELL-TUBE
K-302	LO-CAT Feed Air Blower	1		CENTRIFUGAL
M-303	LO-CAT Venturi Precontactor	1		
M-304	LO-CAT Liquid-filled Absorber	1		ABSORBER
P-303	LO-CAT Absorbent Solution Circulating Pump	1	1	CENTRIFUGAL
R-304	LO-CAT Oxidizer Vessel	1		VERTICAL-VESSEL

VER	DESCRIPTION	DATE
A	Thermochemical Design Report	8-23-04
B		8-25-04
C		9-17-04
D		11-17-04
E	TC Ethanol Design Report	12-17-06
		AA 12-17-06

NREL NATIONAL RENEWABLE ENERGY LABORATORY
National Bioenergy Center

SECTION A300
TAR REFORMING,CLEANUP,& COMPRESSION

sp0612L PFD-P800-A305 E

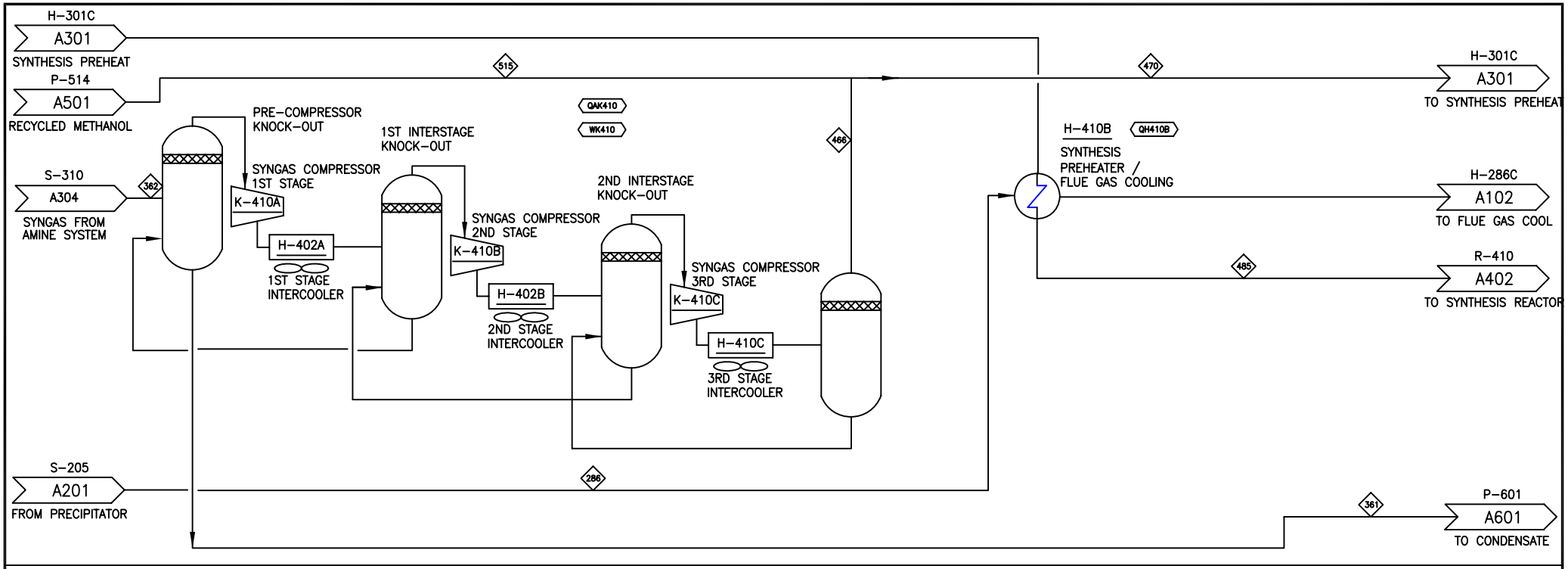

COMPONENT	UNITS	361	362	426	466	470	485	515
Total Flow	lb/hr	67	279,888	214,787	279,888	285,128	285,128	5,026
Temperature	F	110	110	648	207	186	570	154
Pressure	Psia	415.0	415.0	33.7	1,000.0	993.0	991.0	1,000.0
Vapor Fraction		0.00	1.00	1.00	1.00	1.00	1.00	0.00
Hydrogen	lb/hr	0	15,501	6,656	15,501	15,508	15,508	0
Water	lb/hr	67	843	12	843	1,820	1,820	977
Carbon Monoxide	lb/hr	0	215,478	86,938	215,478	215,565	215,565	0
Nitrogen	lb/hr	0	4,168	4,153	4,168	4,173	4,173	0
Oxygen	lb/hr							
Argon	lb/hr							
Carbon Dioxide	lb/hr	0	37,234	105,567	37,234	37,360	37,360	20
Hydrogen Sulfide (H2S)	lb/hr	0	28	21	28	29	29	1
SO2	lb/hr							
Ammonia (NH3)	lb/hr	0	25	18	25	32	32	7
NO2	lb/hr							
Methane	lb/hr	0	3,954	8,115	3,954	3,963	3,963	0
isobutane	lb/hr							
n-butane	lb/hr	0	293	139	293	503	503	209
ethane (C2H6)	lb/hr	0	7	324	7	7	7	0
ethylene (C2H4)	lb/hr	0	636	601	636	637	637	0
acetylene (C2H2)	lb/hr	0	60	57	60	60	60	0
C3H8	lb/hr	0	1,598	1,055	1,598	1,796	1,796	197
Pentane +	lb/hr	0	55	19	55	209	209	153
Benzene (C6H6)	lb/hr	0	4	0	4	4	4	0
Tar (C10H8)	lb/hr	0	1	0	1	1	1	
Carbon (Solid)	lb/hr							
Sulfur (Solid)	lb/hr							
Olivine (Solid)	lb/hr							
MgO (Solid)	lb/hr							
Methanol	lb/hr	0	0	129	0	2,994	2,994	2,994
Ethanol	lb/hr		0	925	0	468	468	467
Propanol	lb/hr			54		0	0	0
n-Butanol	lb/hr			2		0	0	
Pentanol+	lb/hr			0		0	0	
Ash	lb/hr							
Char	lb/hr							
Wood	lb/hr							
Enthalpy Flow	MMBTU/	0	-520	-529	-508	-527	-477	-18
Average Density	lb/ft^3							

Heat Stream No.	MM BTU/hr	Work Stream No.	HP
QAK410	12.41	WK410	9420.9
QAK410A	8.33	WK410A	3221.8
QAK410B	4.08	WK410B	3208.6
QAK410C	0.00	WK410C	2990.5
QH410B	5.22		

Eq. No.	Equipment Name	Req.	Spar	Equipment Type
H-410B	Flue Gas Cool / syngas rxn preheat	1		SHELL-TUBE
K-410	Mixed Alcohol Gas Compressor	1		CENTRIFUGAL

VER	DESCRIPTION	DATE
A	Thermochemical Design Report	8-24-04
B		8-25-04
C		9-17-04
D		11-17-04
E	TC Ethanol Design Report	12-17-06
		AA 12-17-04

NREL NATIONAL RENEWABLE ENERGY LABORATORY
National Bioenergy Center

SECTION A400
MIXED ALCOHOL SYNTHESIS

sp0612L PFD-P800-A401 E

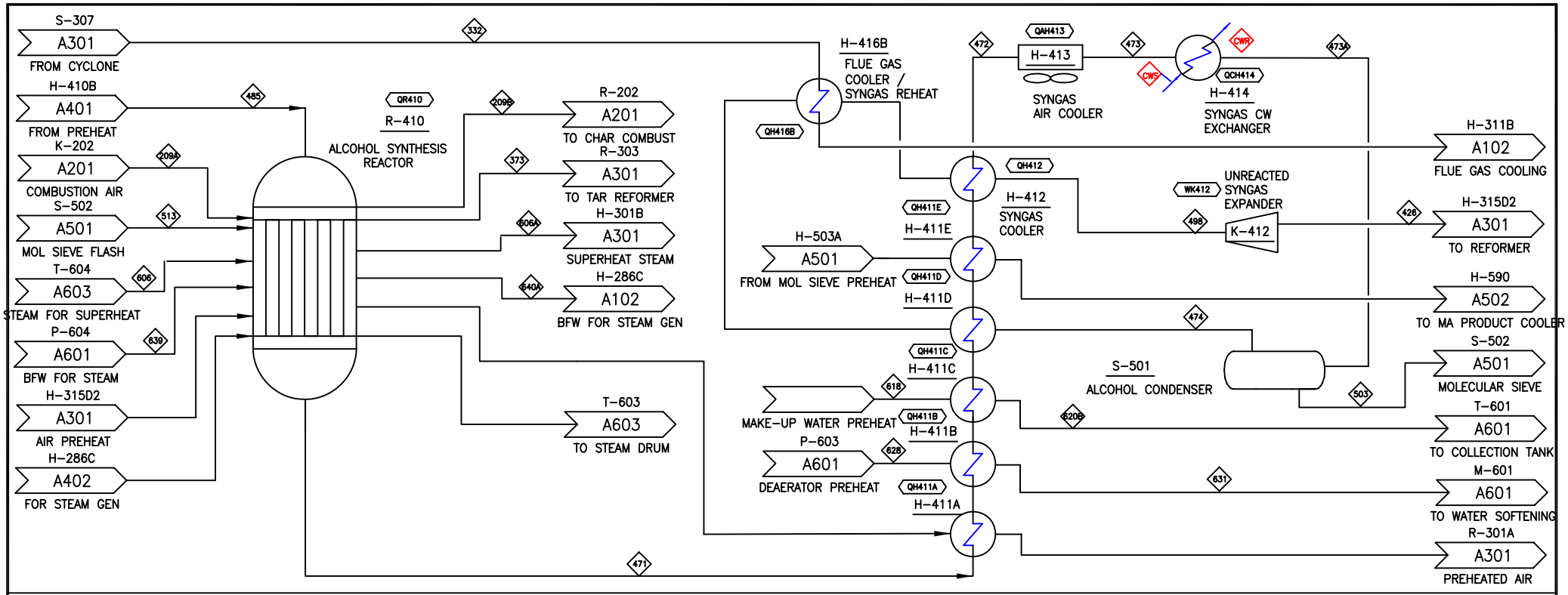

COMPONENT	UNITS	209A	209B	332	373	426	471	472	473	473A	474	485	498	503	513	606	618	620B	628	631	639	640A
Total Flow	lb/hr	430,413	430,413	362,339	7,585	214,787	285,128	285,128	285,128	285,128	215,002	285,128	214,787	70,126	7,585	341,234	34,178	34,178	348,195	348,195	348,198	348,198
Temperature	F	185	400	1,780	527	648	570	200	140	110	110	570	1,500	110	114	526	60	237	201	232	234	527
Pressure	Psia	22	22	18	40	34	986	979	977	972	970	991	965	970	40	855	15	24	40	22	930	875
Vapor Fraction		1	1	1	1	1	1	1	1	1	1	1	1		1	1						
Hydrogen	lb/hr				16	6,656	6,678	6,678	6,678	6,678	6,663	15,508	6,656	16	16							
Water	lb/hr	8,398	8,398	55,487	21	12	1,328	1,328	1,328	1,328	12	1,820	12	1,316	21	341,234	34,178	34,178	348,195	348,195	348,198	348,198
Carbon Monoxide	lb/hr				409	86,938	87,434	87,434	87,434	87,434	87,025	215,585	86,938	409	409							
Nitrogen	lb/hr	318,713	318,713	212,649	15	4,153	4,173	4,173	4,173	4,173	4,157	4,173	4,153	15	15							
Oxygen	lb/hr	97,654	97,654	7,936																		
Argon	lb/hr	5,436	5,436	3,623																		
Carbon Dioxide	lb/hr	212	212	82,273	5,698	105,567	111,390	111,390	111,390	111,390	105,672	37,360	105,567	5,718	5,698							
Hydrogen Sulfide (H2S)	lb/hr				7	21	29	29	29	29	21	29	21	8	7							
SO2	lb/hr			86																		
Ammonia (NH3)	lb/hr				8	18	32	32	32	32	18	32	18	14	8							
NO2	lb/hr			269																		
Methane	lb/hr				93	8,115	8,216	8,216	8,216	8,216	8,123	3,963	8,115	93	93							
isobutane	lb/hr																					
n-butane	lb/hr				161	139	510	510	510	510	139	503	139	370	161							
ethane (C2H6)	lb/hr				16	324	340	340	340	340	324	7	324	16	16							
ethylene (C2H4)	lb/hr				35	601	637	637	637	637	602	637	601	35	35							
acetylene (C2H2)	lb/hr				3	57	60	60	60	60	57	60	57	3	3							
C3H8	lb/hr				595	1,055	1,848	1,848	1,848	1,848	1,057	1,796	1,055	792	595							
Pentane +	lb/hr				37	19	210	210	210	210	19	209	19	190	37							
Benzene (C6H6)	lb/hr				0	0	4	4	4	4	0	4	0	4	0							
Tar (C10H8)	lb/hr				0	0	1	1	1	1	0	1	0	1	0							
Carbon (Solid)	lb/hr																					
Sulfur (Solid)	lb/hr																					
Olivine (Solid)	lb/hr			14																		
MgO (Solid)	lb/hr																					
Methanol	lb/hr				273	129	3,641	3,641	3,641	3,641	129	2,994	129	3,512	273				0	0	0	0
Ethanol	lb/hr				189	925	50,484	50,484	50,484	50,484	926	468	925	49,558	189							
Propanol	lb/hr				10	54	7,119	7,119	7,119	7,119	54	0	54	7,065	10							
n-Butanol	lb/hr				0	2	878	878	878	878	2	0	2	876	0							
Pentanol+	lb/hr				0	0	116	116	116	116	0	0	0	116	0							
Ash	lb/hr			0																		
Char	lb/hr			1																		
Wood	lb/hr			0																		
Enthalpy Flow	MMBTU/	0	0	-5	0	-5	-7	-7	-8	-8	-6	-5	-5	-2	0	-19	-2	-2	-23	-23	-23	-22
Average Density	lb/ft^3																					

Heat Stream No.	MM BTU/hr	Work Stream No.	HP
QAH413	10.78	WK412	-30024.1
QCH414	4.48		
QH411A	2.04		
QH411B	15.53		
QH411C	6.60		
QH411D	4.01		
QH411E	0.78		
QH412	28.13		
QH416B	81.67		
QR410	209.42		

Eq. No.	Equipment Name	Req.	Spar	Equipment Type
H-411A	Air preheat #3 / post Reactor Syngas cooling #1	1		SHELL-TUBE
H-411B	Post synthesis cooler #2/Deaerator Water Preheater #1	1		SHELL-TUBE
H-411C	Post Synthesis cooler #3/Makeup Water heater	1		SHELL-TUBE
H-411D	Post Synthesis cooler #4 / syngas recycle heat #1	1		SHELL-TUBE
H-411E	Post Synthesis Cooler #5/Mol Sieve preheater #2	1		SHELL-TUBE
H-412	Post Mixed Alcohol Cooler	1		SHELL-TUBE
H-413	Mixed Alcohol first Condenser (air cooled)	1		AIR-COOLED EXCHANGER
H-416B	Recycle Syngas Heat #2 / Flue gas Cool	1		SHELL-TUBE
K-412	Purge Gas Expander	1		CENTRIFUGAL
R-410	Mixed Alcohol Reactor	1		VERTICAL-VESSEL
S-501	Mixed Alcohols Condensation Knock-out	1		KNOCK-OUT DRUM

VER	DESCRIPTION	DATE
A	Thermochemical Design Report	8-24-04
B		8-25-04
C		9-17-04
D		11-17-04
E	TC Ethanol Design Report	12-17-06
		AA 12-17-06

NREL National Bioenergy Center

NATIONAL RENEWABLE ENERGY LABORATORY

SECTION A400
MIXED ALCOHOL SYNTHESIS

sp0612L PFD-P800-A402 E

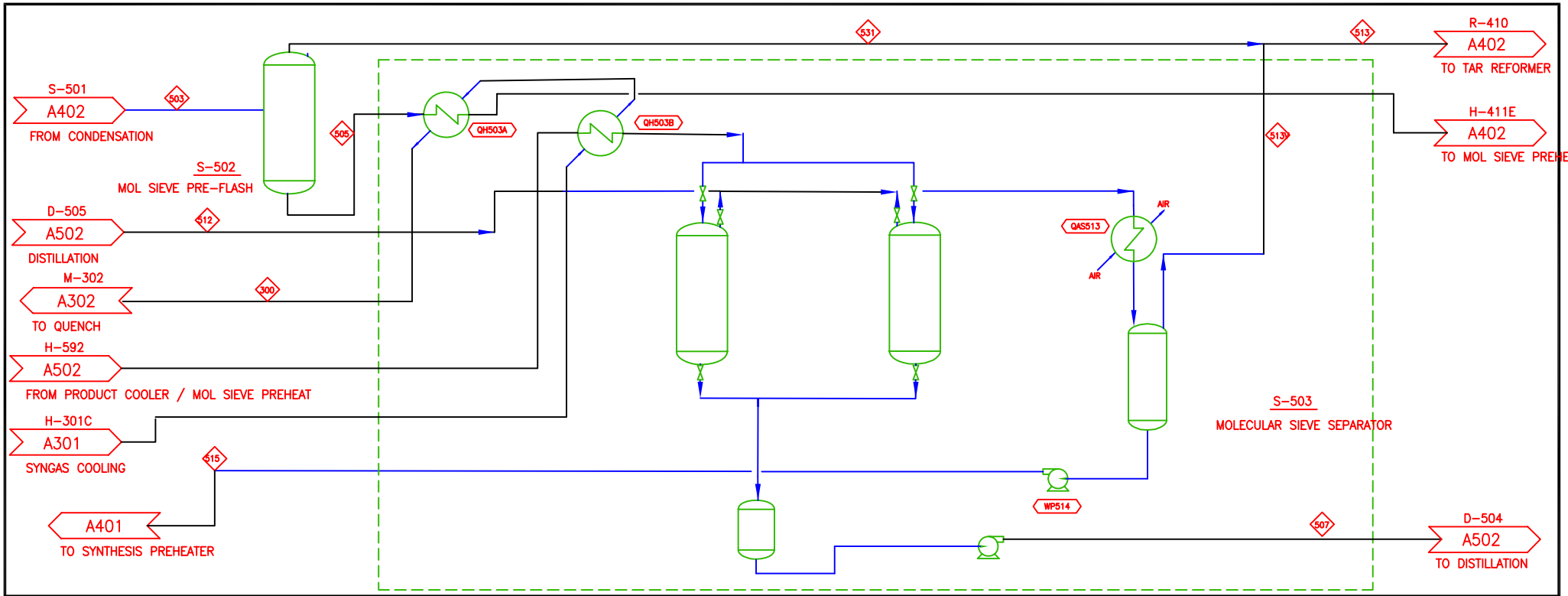

COMPONENT	UNITS	300	503	505	506	507	512	513	513V	515	531
Total Flow	lb/hr	379,930	70,126	64,474	64,474	63,478	5,962	7,585	1,933	5,026	5,652
Temperature	F	140	110	96	267	245	190	114	140	154	96
Pressure	Psia	14.5	970.0	60.0	55.0	55.0	45.0	40.0	40.0	1,000.0	60.0
Vapor Fraction		1.00	0.00	0.00	1.00	1.00	1.00	1.00	1.00	0.00	1.00
Hydrogen	lb/hr	15,501	16	0	0	0	0	16	0	0	15
Water	lb/hr	48,123	1,316	1,314	1,314	317	0	21	19	977	2
Carbon Monoxide	lb/hr	215,478	409	7	7	7	7	409	7	0	402
Nitrogen	lb/hr	4,168	15	0	0	0	0	15	0	0	15
Oxygen	lb/hr										
Argon	lb/hr										
Carbon Dioxide	lb/hr	89,839	5,718	1,057	1,057	1,057	1,057	5,698	1,037	20	4,661
Hydrogen Sulfide (H2S)	lb/hr	143	8	5	5	5	5	7	4	1	3
SO2	lb/hr										
Ammonia (NH3)	lb/hr	28	14	11	11	11	11	8	5	7	3
NO2	lb/hr										
Methane	lb/hr	3,954	93	4	4	4	4	93	4	0	89
isobutane	lb/hr										
n-butane	lb/hr	293	370	342	342	342	342	161	133	209	28
ethane (C2H6)	lb/hr	7	16	3	3	3	3	16	3	0	13
ethylene (C2H4)	lb/hr	636	35	6	6	6	6	35	6	0	29
acetylene (C2H2)	lb/hr	60	3	1	1	1	1	3	1	0	2
C3H8	lb/hr	1,598	792	608	608	608	608	595	412	197	184
Pentane +	lb/hr	55	190	186	186	186	186	37	33	153	4
Benzene (C6H6)	lb/hr	4	4	4	4	4	0	0	0	0	0
Tar (C10H8)	lb/hr	1	1	1	1	1		0			0
Carbon (Solid)	lb/hr										
Sulfur (Solid)	lb/hr										
Olivine (Solid)	lb/hr	36									
MgO (Solid)	lb/hr										
Methanol	lb/hr	0	3,512	3,488	3,488	3,488	3,243	273	250	2,994	24
Ethanol	lb/hr	0	49,558	49,391	49,391	49,391	489	189	22	467	167
Propanol	lb/hr		7,065	7,055	7,055	7,055	0	10	0	0	10
n-Butanol	lb/hr		876	875	875	875		0			0
Pentanol+	lb/hr		116	116	116	116		0			0
Ash	lb/hr	0									
Char	lb/hr	2									
Wood	lb/hr	0									
Enthalpy Flow	MMBTU/	-989	-190	-170	-140	-135	-15	-25	-5	-18	-19
Average Density	lb/ft^3										

Heat Stream No.	MM BTU/hr	Work Stream No.	HP
QAS513	2.85	WP514	25.3
QH503A	21.68		
QH503B	0.51		

Eq. No.	Equipment Name	Req.	Spar	Equipment Type
H-503A	Syngas Cooler #4 / Mol Sieve preheater #1	1		SHELL-TUBE
H-503B	Mol Sieve Superheater / reformed syngas cool #5	1		SHELL-TUBE
S-502	Methanol Separation Column	1		DISTILLATION
S-503	Molecular Sieve (9 pieces)	1		PACKAGE

VER	DESCRIPTION	DATE
A	Thermochemical Design Report	3-20-04
B		8-25-04
C		9-17-04
D		11-17-04
E	TC Ethanol Design Report	12-17-06
		AA 12-17-06

NREL NATIONAL RENEWABLE ENERGY LABORATORY
National Bioenergy Center

SECTION A500
ALCOHOL PURIFICATION

sp0612L | PFD-P800-A501 | E

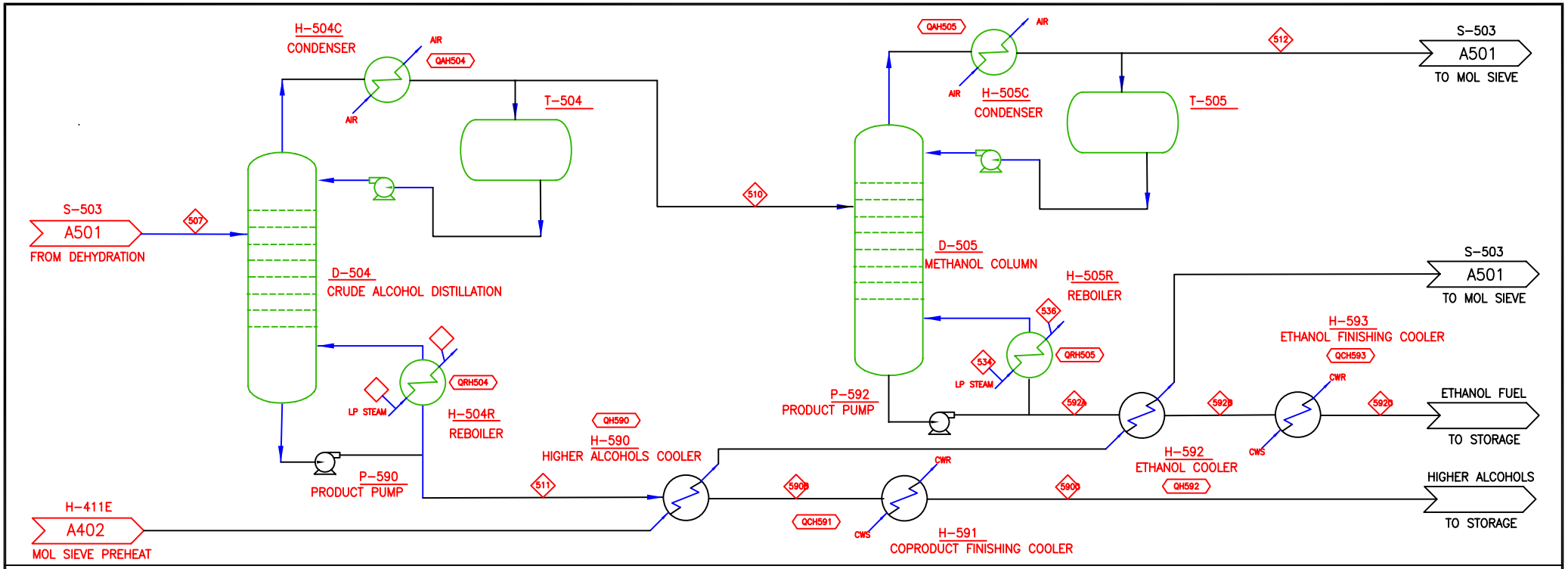

COMPONENT	UNITS	507	510	511	512	534	536	590B	590C	592A	592B	592C
Total Flow	lb/hr	63,478	54,688	8,790	5,962	50,741	50,741	8,790	8,790	48,726	48,726	48,726
Temperature	F	245	226	267	190	395	292	120	110	229	120	110
Pressure	Psia	55	45	45	45	65	60	40	35	45	40	35
Vapor Fraction		1	1	0	1	1						
Hydrogen	lb/hr	0	0		0							
Water	lb/hr	317	0	317	0	50,741	50,741	317	317	0	0	0
Carbon Monoxide	lb/hr	7	7		7							
Nitrogen	lb/hr	0	0		0							
Oxygen	lb/hr											
Argon	lb/hr											
Carbon Dioxide	lb/hr	1,057	1,057	0	1,057			0	0			
Hydrogen Sulfide (H2S)	lb/hr	5	5	0	5			0	0			
SO2	lb/hr											
Ammonia (NH3)	lb/hr	11	11	0	11			0	0			
NO2	lb/hr											
Methane	lb/hr	4	4	0	4			0	0			
isobutane	lb/hr											
n-butane	lb/hr	342	342	0	342			0	0	0	0	0
ethane (C2H6)	lb/hr	3	3	0	3			0	0			
ethylene (C2H4)	lb/hr	6	6	0	6			0	0			
acetylene (C2H2)	lb/hr	1	1		1							
C3H8	lb/hr	608	608	0	608			0	0			
Pentane +	lb/hr	186	186	0	186			0	0	0	0	0
Benzene (C6H6)	lb/hr	4	3	1	0			1	1	3	3	3
Tar (C10H8)	lb/hr	1		1				1	1			
Carbon (Solid)	lb/hr											
Sulfur (Solid)	lb/hr											
Olivine (Solid)	lb/hr											
MgO (Solid)	lb/hr											
Methanol	lb/hr	3,488	3,488	0	3,243			0	0	244	244	244
Ethanol	lb/hr	49,391	48,897	494	489			494	494	48,408	48,408	48,408
Propanol	lb/hr	7,055	71	6,985	0			6,985	6,985	71	71	71
n-Butanol	lb/hr	875	0	875				875	875			
Pentanol+	lb/hr	116	0	116				116	116			
Ash	lb/hr											
Char	lb/hr											
Wood	lb/hr											
Enthalpy Flow	MMBTU/	-1	-1	0	0	-3	-3	0	0	-1	-1	-1
Average Density	lb/ft^3											

Heat Stream No.	MM BTU/hr	Work Stream No.	HP
QAH504	23.10		
QAH505	45.24		
QCH591	0.06		
QCH593	0.38		
QH590	1.03		
QH592	4.60		
QRH504	-20.15		
QRH505	-28.97		

Eq. No.	Equipment Name	Req.	Spar	Equipment Type
D-504	Ethanol/Propanol Splitter	1		
D-505	Methanol/Ethanol Splitter	1		
H-590	MA Product Cooler / Mol Sieve preheater #3	1		SHELL-TUBE
H-591	Higher Alcohol Product Finishing cooler	1		SHELL-TUBE
H-592	ETHANOL Product Cooler / Mol Sieve preheater #4	1		SHELL-TUBE
H-593	ETHANOL Product Finishing cooler	1		SHELL-TUBE
H-504C	D-504 condenser (air cooled)	1		AIR-COOLED EXCHANGER
H-504R	Ethanol/Propanol Splitter Reboiler	1		
H-505C	D-505 condenser (air cooled)	1		AIR-COOLED EXCHANGER
H-505R	Methanol/Ethanol Splitter Reboiler	1		
P-590	Mixed Alcohol Product Pump	1		CENTRIFUGAL
P-592	Ethanol Product Pump	1		CENTRIFUGAL

VER	DESCRIPTION	DATE
A	Thermochemical Design Report	3-20-04
B		8-25-04
C		9-17-04
D		11-17-04
E	TC Ethanol Design Report	12-17-06
		AA 12-17-06

NREL NATIONAL RENEWABLE ENERGY LABORATORY
National Bioenergy Center

SECTION A500
ALCOHOL PURIFICATION

sp0612L | PFD-P800-A502 | E

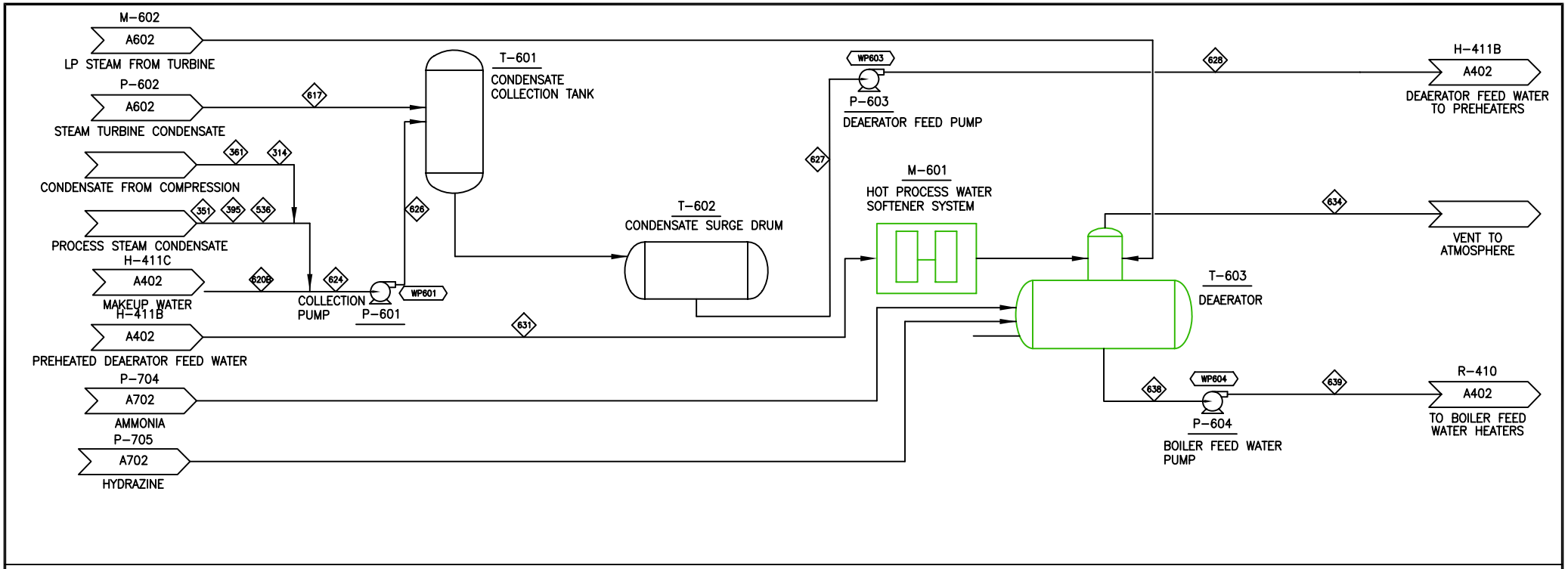

COMPONENT	UNITS	314	351	361	395	536	617	620B	624	626	627	628	631	634	638	639
Total Flow	lb/hr	46,015	135,784	67	114	50,741	81,297	34,178	266,898	266,898	348,195	348,195	348,195	2	348,198	348,198
Temperature	F	69	230	110	230	292	116	237	226	212	201	201	232	132	232	234
Pressure	Psia	35	60	415	60	60	15	24	24	15	15	40	22	35	22	930
Vapor Fraction										0				1		
Hydrogen	lb/hr	0		0										0		
Water	lb/hr	46,013	135,784	67	114	50,741	81,297	34,178	266,898	266,898	348,195	348,195	348,195		348,198	348,198
Carbon Monoxide	lb/hr	0		0										0		
Nitrogen	lb/hr	0		0										0		
Oxygen	lb/hr															
Argon	lb/hr															
Carbon Dioxide	lb/hr	0		0										0		
Hydrogen Sulfide (H2S)	lb/hr	0		0										0		
SO2	lb/hr															
Ammonia (NH3)	lb/hr	1		0										1		
NO2	lb/hr															
Methane	lb/hr	0		0										0		
isobutane	lb/hr															
n-butane	lb/hr	0		0										0		
ethane (C2H6)	lb/hr	0		0										0		
ethylene (C2H4)	lb/hr	0		0										0		
acetylene (C2H2)	lb/hr	0		0										0		
C3H8	lb/hr	0		0										0		
Pentane +	lb/hr	0		0										0		
Benzene (C6H6)	lb/hr	0		0										0		
Tar (C10H8)	lb/hr	0		0										0		
Carbon (Solid)	lb/hr															
Sulfur (Solid)	lb/hr															
Olivine (Solid)	lb/hr															
MgO (Solid)	lb/hr															
Methanol	lb/hr			0					0	0	0	0	0		0	0
Ethanol	lb/hr															
Propanol	lb/hr															
n-Butanol	lb/hr															
Pentanol+	lb/hr															
Ash	lb/hr															
Char	lb/hr															
Wood	lb/hr															
Enthalpy Flow	MMBTU/	-3	-9	0	0	-3	-6	-2	-18	-18	-23	-23	-23	0	-23	-23
Average Density	lb/ft^3															

Heat Stream No.	MM BTU/hr	Work Stream No.	HP
		WP601	0.8
		WP603	14.1
		WP604	519.9

Eq. No.	Equipment Name	Req.	Spar	Equipment Type
M-601	Hot Process Water Softener System	1		PACKAGE
P-601	Collection Pump	1	1	CENTRIFUGAL
P-603	Deaerator Feed Pump	1	1	CENTRIFUGAL
P-604	Boiler Feed Water Pump	1	1	CENTRIFUGAL
T-601	Condensate Collection Tank	1		HORIZONTAL-VESSEL
T-602	Condensate Surge Drum	1		HORIZONTAL-VESSEL
T-603	Deaerator	1		HORIZONTAL-VESSEL

VER	DESCRIPTION	DATE
A	Thermochemical Design Report	8-24-04
B		8-26-04
C		9-17-04
D		11-17-04
E	TC Ethanol Design Report	12-17-06
		AA 12-17-06

NREL NATIONAL RENEWABLE ENERGY LABORATORY
National Bioenergy Center

SECTION 600
STEAM SYSTEM & PWR GENERATION

sp0612L | PFD-P800-A601 | E

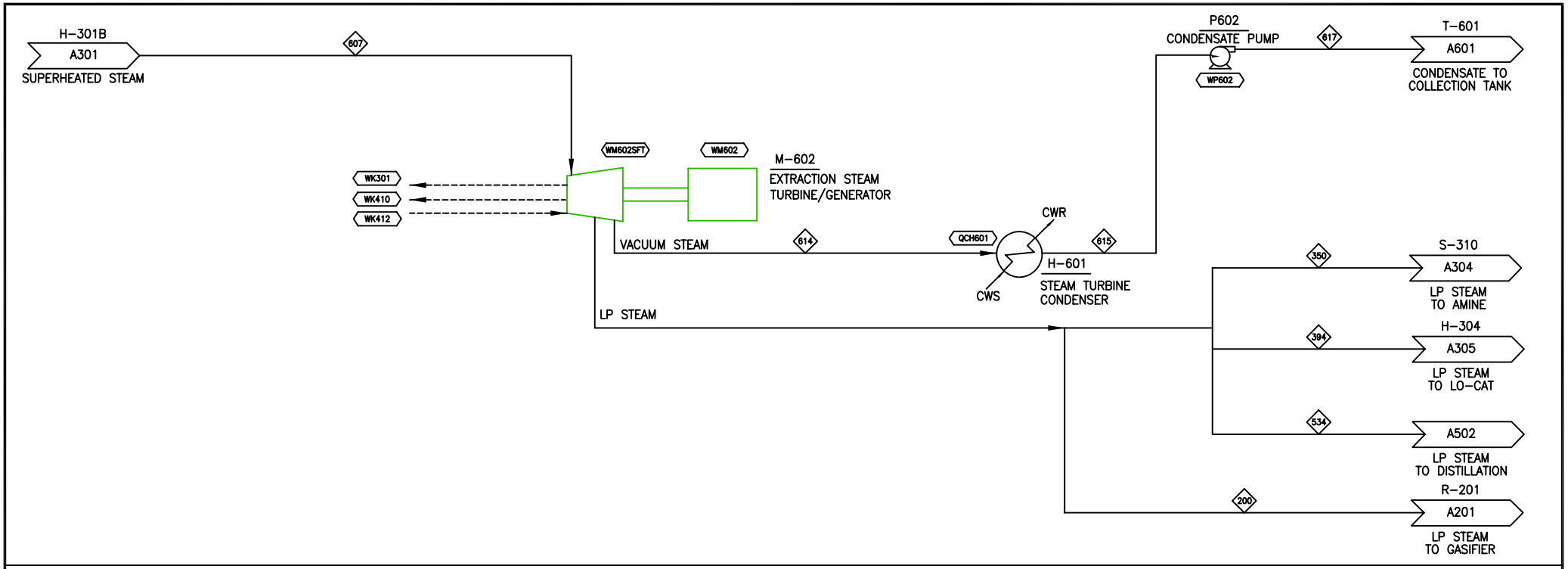

COMPONENT	UNITS	200	350	394	534	607	614	615	617
Total Flow	lb/hr	73,120	135,784	114	50,741	341,234	81,297	81,297	81,297
Temperature	F	383	395	395	395	900	116	116	116
Pressure	Psia	25	65	65	65	850	2	2	15
Vapor Fraction		1	1	1	1	1	1		
Hydrogen	lb/hr								
Water	lb/hr	73,120	135,784	114	50,741	341,234	81,297	81,297	81,297
Carbon Monoxide	lb/hr								
Nitrogen	lb/hr								
Oxygen	lb/hr								
Argon	lb/hr								
Carbon Dioxide	lb/hr								
Hydrogen Sulfide (H2S)	lb/hr								
SO2	lb/hr								
Ammonia (NH3)	lb/hr								
NO2	lb/hr								
Methane	lb/hr								
isobutane	lb/hr								
n-butane	lb/hr								
ethane (C2H6)	lb/hr								
ethylene (C2H4)	lb/hr								
acetylene (C2H2)	lb/hr								
C3H8	lb/hr								
Pentane +	lb/hr								
Benzene (C6H6)	lb/hr								
Tar (C10H8)	lb/hr								
Carbon (Solid)	lb/hr								
Sulfur (Solid)	lb/hr								
Olivine (Solid)	lb/hr								
MgO (Solid)	lb/hr								
Methanol	lb/hr								
Ethanol	lb/hr								
Propanol	lb/hr								
n-Butanol	lb/hr								
Pentanol+	lb/hr								
Ash	lb/hr								
Char	lb/hr								
Wood	lb/hr								
Enthalpy Flow	MMBTU/	-4	-8	0	-3	-18	-5	-6	-6
Average Density	lb/ft^3								

Heat Stream No.	MM BTU/hr
QCH601	76.84

Work Stream No.	HP
WK301	45746.9
WK410	9420.9
WK412	-30024.1
WM602A	-11289.4
WM602B	8466.6
WM602C	18714.0
WM602SFT	-11289.4
WP602	3.7

Eq. No.	Equipment Name	Req.	Spar	Equipment Type
H-601	Steam Turbine Condenser	1		SHELL-TUBE
M-602	Extraction Steam Turbine/Generator	1		STEAM-TURBINE
P-602	Condensate Pump	1	1	CENTRIFUGAL

VER	DESCRIPTION	DATE
A	Thermochemical Design Report	8-24-04
B		8-26-04
C		9-17-04
D		11-17-04
E	TC Ethanol Design Report	12-17-06

NREL NATIONAL RENEWABLE ENERGY LABORATORY
National Bioenergy Center

SECTION A600
STEAM SYSTEM & PWR GENERATION

sp0612L | PFD-P800-A602 | E

AA 12-17-06

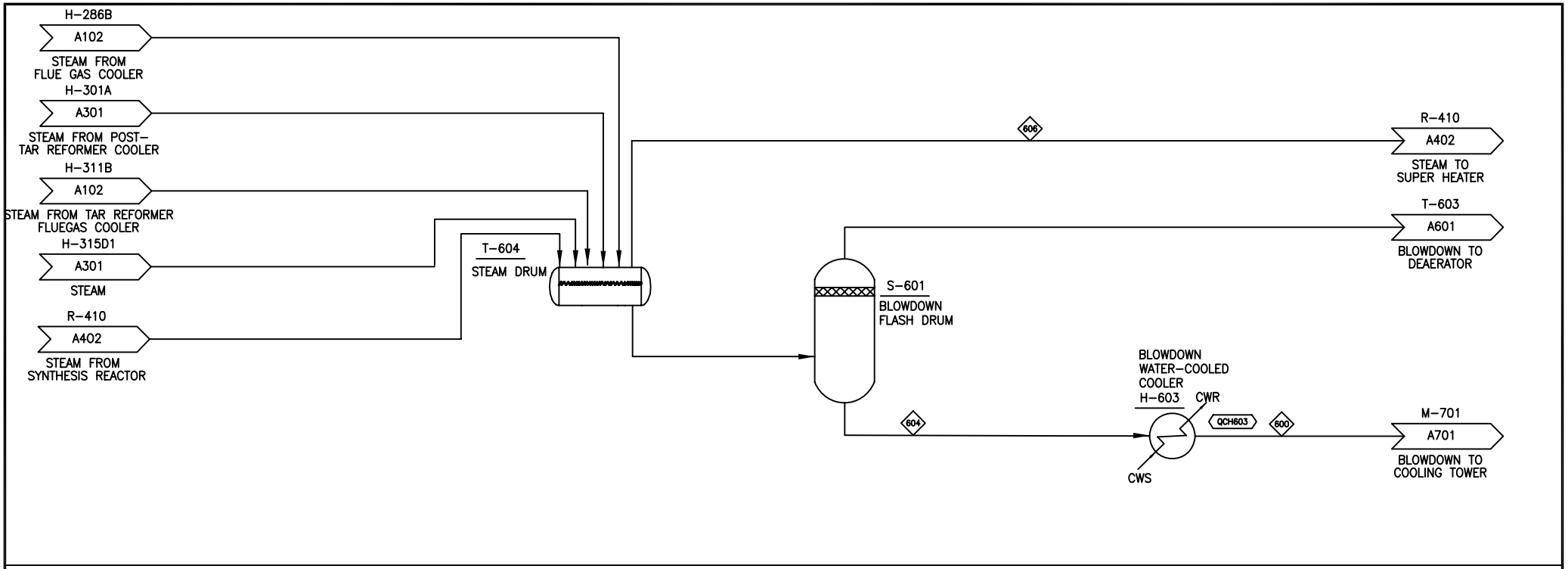

COMPONENT	UNITS	600	604	605	606
Total Flow	lb/hr	6,964	6,964	341,234	341,234
Temperature	F	112	527	527	526
Pressure	Psia	15	865	865	855
Vapor Fraction				1	1
Hydrogen	lb/hr				
Water	lb/hr	6,964	6,964	341,234	341,234
Carbon Monoxide	lb/hr				
Nitrogen	lb/hr				
Oxygen	lb/hr				
Argon	lb/hr				
Carbon Dioxide	lb/hr				
Hydrogen Sulfide (H2S)	lb/hr				
SO2	lb/hr				
Ammonia (NH3)	lb/hr				
NO2	lb/hr				
Methane	lb/hr				
isobutane	lb/hr				
n-butane	lb/hr				
ethane (C2H6)	lb/hr				
ethylene (C2H4)	lb/hr				
acetylene (C2H2)	lb/hr				
C3H8	lb/hr				
Pentane +	lb/hr				
Benzene (C6H6)	lb/hr				
Tar (C10H8)	lb/hr				
Carbon (Solid)	lb/hr				
Sulfur (Solid)	lb/hr				
Olivine (Solid)	lb/hr				
MgO (Solid)	lb/hr				
Methanol	lb/hr				
Ethanol	lb/hr				
Propanol	lb/hr				
n-Butanol	lb/hr				
Pentanol+	lb/hr				
Ash	lb/hr				
Char	lb/hr				
Wood	lb/hr				
Enthalpy Flow	MMBTU/	0	0	-19	-19
Average Density	lb/ft^3				

Heat Stream No.	MM BTU/hr	Work Stream No.	HP
QCH603	3.07		

Eq. No.	Equipment Name	Req.	Spar	Equipment Type
H-603	Blow dow n Water-cooled Cooler	1		SHELL-TUBE
S-601	Blow dow n Flash Drum	1		HORIZONTAL-VESSEL
T-604	Steam Drum	1		HORIZONTAL-VESSEL

VER	DESCRIPTION	DATE
A	Thermochemical Design Report	8-26-04
C		9-17-04
D		11-17-04
E	TC Ethanol Design Report	12-17-06
		AA 12-17-06

NREL NATIONAL RENEWABLE ENERGY LABORATORY
National Bioenergy Center

SECTION A600
STEAM SYSTEM & PWR GENERATION

sp0612L PFD-P800-A603 E

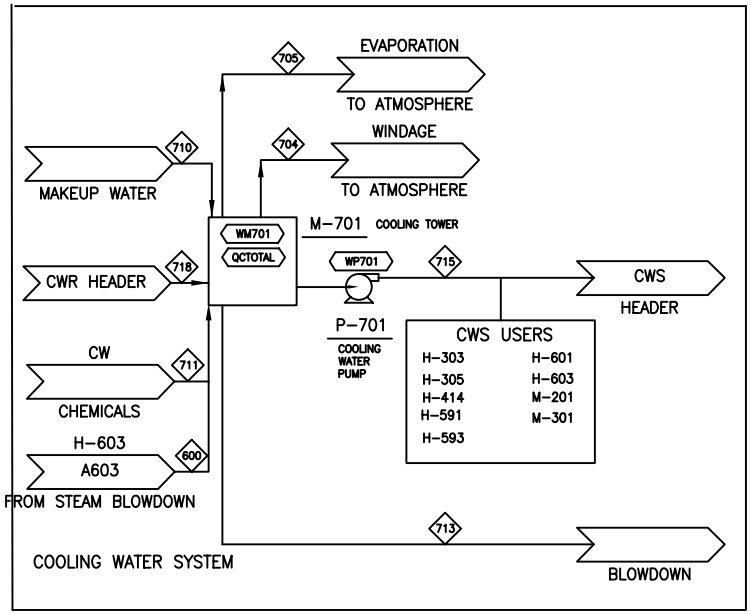

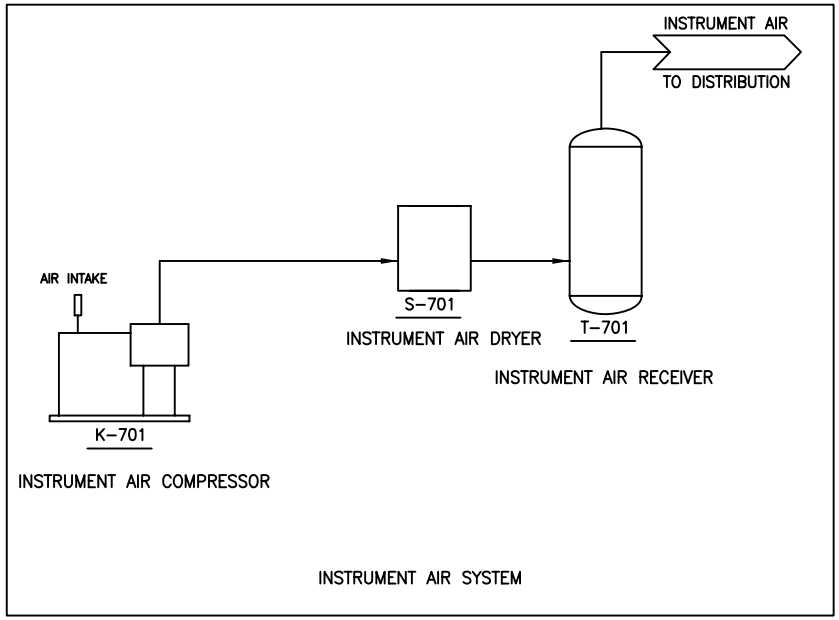

COMPONENT	UNITS	600	704	705	710	711	713	715	718
Total Flow	lb/hr	6,964	8,020	4,156,743	84,649	1	16,719	4,010,067	4,010,067
Temperature	F	112	97	106	60	60	90	90	110
Pressure	Psia	15	15	15	15	15	15	75	60
Vapor Fraction				1					
Hydrogen	lb/hr								
Water	lb/hr	6,964	8,020	146,676	84,649	1	16,719	4,010,067	4,010,067
Carbon Monoxide	lb/hr								
Nitrogen	lb/hr			3,028,475					
Oxygen	lb/hr			927,925					
Argon	lb/hr			51,656					
Carbon Dioxide	lb/hr			2,011					
Hydrogen Sulfide (H2S)	lb/hr								
SO2	lb/hr								
Ammonia (NH3)	lb/hr								
NO2	lb/hr								
Methane	lb/hr								
isobutane	lb/hr								
n-butane	lb/hr								
ethane (C2H6)	lb/hr								
ethylene (C2H4)	lb/hr								
acetylene (C2H2)	lb/hr								
C3H8	lb/hr								
Pentane +	lb/hr								
Benzene (C6H6)	lb/hr								
Tar (C10H8)	lb/hr								
Carbon (Solid)	lb/hr								
Sulfur (Solid)	lb/hr								
Olivine (Solid)	lb/hr								
MgO (Solid)	lb/hr								
Methanol	lb/hr								
Ethanol	lb/hr								
Propanol	lb/hr								
n-Butanol	lb/hr								
Pentanol+	lb/hr								
Ash	lb/hr								
Char	lb/hr								
Wood	lb/hr								
Enthalpy Flow	MMBTU/	0	-1	-8	-6	0	-1	-276	-275
Average Density	lb/ft^3								

Heat Stream No.	MM BTU/hr	Work Stream No.	HP
QCTOTAL	92.11	WM701	225.9
		WP701	434.2

Eq. No.	Equipment Name	Req.	Spar	Equipment Type
K-701	Plant Air Compressor	2	1	RECIPROCATING
M-701	Cooling Tower System	1		INDUCED-DRAFT
P-701	Cooling Water Pump	1	1	CENTRIFUGAL
S-701	Instrument Air Dryer	1	1	PACKAGE
T-701	Plant Air Receiver	1		HORIZONTAL-VESSEL

VER	DESCRIPTION	DATE
C	Thermochemical Design Report	9-20-04
D		11-22-04
E	TC Ethanol Design Report	12-17-06

NREL NATIONAL RENEWABLE ENERGY LABORATORY
National Bioenergy Center

SECTION A700
COOLING WATER & OTHER UTILITIES

sp0612L PFD-P800-A701 E

AA 12-17-0

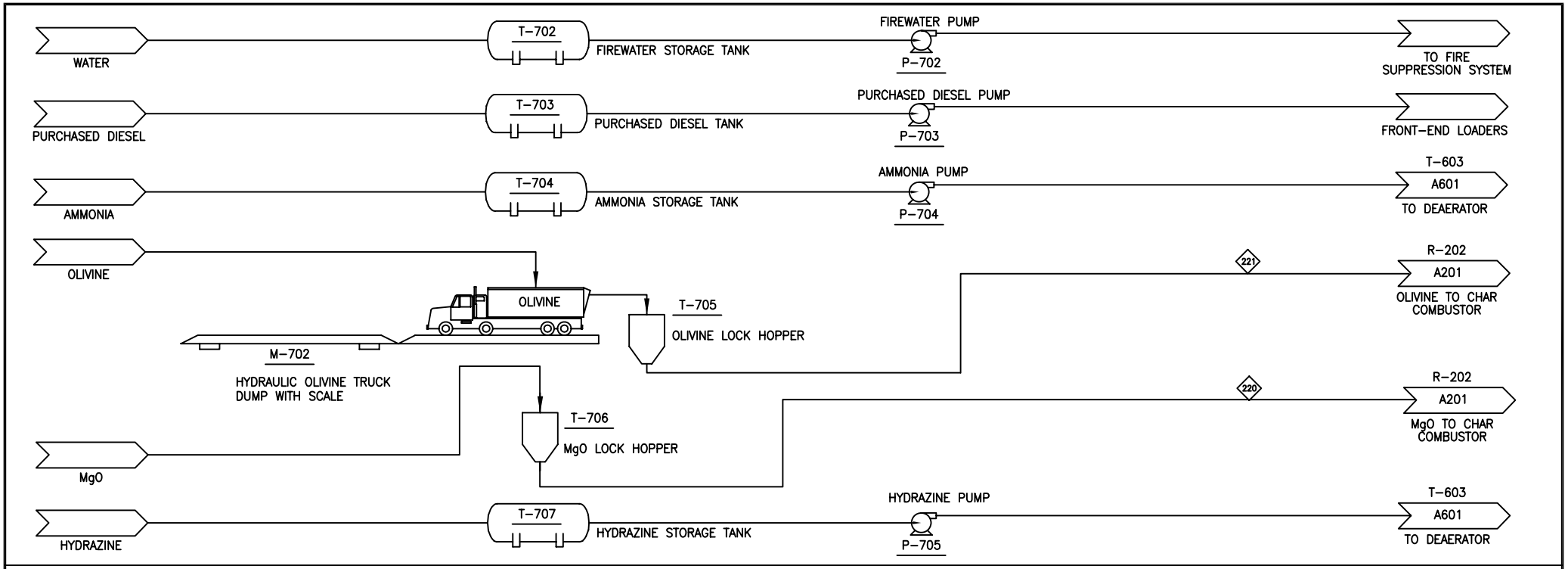

COMPONENT	UNITS	220	221
Total Flow	lb/hr	7	538
Temperature	F	60	60
Pressure	Psia	25	22
Vapor Fraction		1	1
Hydrogen	lb/hr		
Water	lb/hr		
Carbon Monoxide	lb/hr		
Nitrogen	lb/hr		
Oxygen	lb/hr		
Argon	lb/hr		
Carbon Dioxide	lb/hr		
Hydrogen Sulfide (H2S)	lb/hr	0	0
SO2	lb/hr		
Ammonia (NH3)	lb/hr		
NO2	lb/hr		
Methane	lb/hr		
isobutane	lb/hr		
n-butane	lb/hr		
ethane (C2H6)	lb/hr		
ethylene (C2H4)	lb/hr		
acetylene (C2H2)	lb/hr		
C3H8	lb/hr		
Pentane +	lb/hr		
Benzene (C6H6)	lb/hr		
Tar (C10H8)	lb/hr		
Carbon (Solid)	lb/hr		
Sulfur (Solid)	lb/hr		
Olivine (Solid)	lb/hr	7	538
MgO (Solid)	lb/hr		
Methanol	lb/hr		
Ethanol	lb/hr		
Propanol	lb/hr		
n-Butanol	lb/hr		
Pentanol+	lb/hr		
Ash	lb/hr		
Char	lb/hr		
Wood	lb/hr		
Enthalpy Flow	MMBTU/	0	0
Average Density	lb/ft^3		

Heat Stream No.	MM BTU/hr	Work Stream No.	HP

Eq. No.	Equipment Name	Req.	Spar	Equipment Type
M-702	Hydraulic Truck Dump with Scale	1		TRUCK-SCALE
P-702	Firewater Pump	1	1	CENTRIFUGAL
P-703	Diesel Pump	1	1	CENTRIFUGAL
P-704	Ammonia Pump	1	1	CENTRIFUGAL
P-705	Hydrazine Pump	1		CENTRIFUGAL
T-702	Firewater Storage Tank	1		FLAT-BTM-STORAGE
T-703	Diesel Storage Tank	1		FLAT-BTM-STORAGE
T-704	Ammonia Storage Tank	1		HORIZONTAL-STORAGE
T-705	Olivine Lock Hopper	1		VERTICAL-VESSEL
T-706	MgO Lock Hopper	1		VERTICAL-VESSEL
T-707	Hydrazine Storage Tank	1		VERTICAL-VESSEL

VER	DESCRIPTION	DATE
A	Thermochemical Design Report	3-23-04
B		8-26-04
C		9-17-04
D		11-17-04
E	TC Ethanol Design Report	12-17-06
		AA 12-17-06

NREL NATIONAL RENEWABLE ENERGY LABORATORY
National Bioenergy Center

SECTION A700
COOLING WATER & OTHER UTILITIES

sp0612L PFD-P800-A702 E

Appendix I

Syngas and Char Correlations

The gasifier was modeled using correlations based on data from the Battelle Columbus Laboratory (BCL) 9 tonne/day test facility. The data and original correlations for the gasifier can be found in Bain (1992). The experimental runs were performed for several different wood types including Red Oak, Birch, Maple, and Pine chips, sawdust, and other hard and soft wood chips. The original pilot plant data for these runs can be found in Feldmann, et al, (1988). The temperature range for the data is 1,280 to 1,857ºF and the pressure range is 2.4 to 14.4 psig; the majority of the data are in the range of 1,500 to 1,672ºF.

The BCL test facility's gas production data was correlated to gasifier temperature with a quadratic function in the form:

$$X = a + bT + cT^2$$

where the temperature, T, in units of °F. The coefficients a, b, and c, as well as the units for the correlated variable are shown in Table 3. Even thought there is a correlation for the char formation, it is not used; instead the amount and elemental analysis for the char is determined by mass differences between the produced syngas and the converted biomass.

Table 3. Gasifier Correlation

Variable	*a*	*b*	*c*	Units
Dry Syngas	28.993	-0.043325	0.000020966	scf gas/lb maf wood[a]
CO	133.46	-0.1029	0.000028792	mol% dry gas
CO_2	-9.5251	0.037889	-0.000014927	mol% dry gas
CH_4	-13.82	0.044179	-0.000016167	mol% dry gas
C_2H_4	-38.258	0.058435	-0.000019868	mol% dry gas
C_2H_6	11.114	-0.011667	0.000003064	mol% dry gas
H_2	17.996	-0.026448	0.00001893	mol% dry gas
C_2H_2	-4.3114	0.0054499	-0.000001561	mol% dry gas
Tar	0.045494	-0.000019759		lb/lb dry wood

The following general procedure is used for the gasifier production:

- A gasifier temperature T is assumed.
- The mass and molar amounts of carbon, hydrogen, oxygen, sulfur, nitrogen, and ash (as a pseudo-element) are determined from the biomass's ultimate analysis.
- The amount of syngas and its composition is determined from the gasifier correlations.
- The amount of carbon in the syngas and tar is determined. Residual carbon is parsed in the char.
- The amount of oxygen in the syngas is determined. A minimum amount of oxygen is required to be parsed to the char (4% of biomass oxygen). If there is a deficit of oxygen, then the associated water is decomposed to make sure that this amount of oxygen is parsed to the char; if there is excess oxygen, then it is parsed to the char without decomposing hydrogen.
- A set amount of sulfur is parsed to the char (8.3%). All remaining sulfur is set as H_2S in the syngas.

[a] Scf = standard cubic feet. The standard conditons are 1 atm pressure and 60°F temperature.

- A set amount of nitrogen is parsed to the char (6.6%). All remaining nitrogen is set as NH_3 in the syngas.
- The amount of hydrogen in the syngas (including tar, H_2S, NH_3, and decomposed water) is determined. All remaining hydrogen is parsed to the char.
- All ash is parsed to the char.
- The heat of formation of the char is estimated from the resulting ultimate analysis from this elemental material balance.
- The gasifier temperature is adjusted so the there is no net heat for an adiabatic reaction.

The syngas amount and composition will be dependent upon the biomass composition and the gasifier temperature. As an example, the resulting syngas composition for the woody biomass used in this design report can be seen in Figure 2. Note from this figure that the amount of char decreases with increasing temperature and that the water does not start to decompose until high temperatures (here at 1650°F and higher).

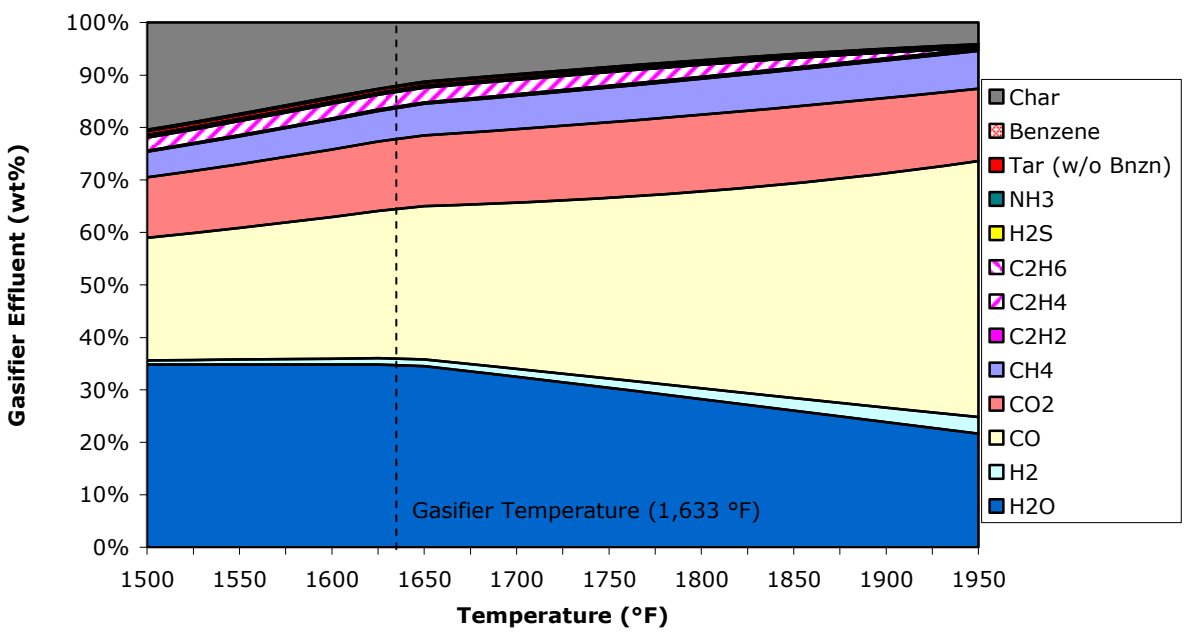

Figure 2. Syngas Composition for Woody Biomass Used in Design Report

References

Bain, R. (January 14, 1992). *Material and Energy Balances for Methanol from Biomass Using Biomass Gasifiers*.

Feldmann, H. F.; Paisley, M. A.; Applebaus, H.R.; Taylor, D.R. (July 1988). *Conversion of Forest Residues to A Medium-Rich Gas in a High-Throughput Gasifier*.

Appendix J

Alcohol Synthesis Catalyst References

A literature search was conducted to review existing mixed alcohol technology and how it has developed over the past 20 years. This appendix provides a list of literature reviewed, including authors and journal names, as well as brief descriptions of the information contained within each source. The literature sources examined include a mixture of experimental results and state of technology summarizations. Together, over 40 different sources were used. Some generalizations garnered from this search are summarized below.

The term "mixed alcohols" refers to a mixture of C1 – C8 alcohols, with preference towards the higher alcohols (C2-C6). Mixed alcohols catalysts are typically categorized into several groups based on their composition and/or derivation. Common to all of these catalysts is the addition of alkali metals which shift the product slate towards alcohol production. Spath, et al., categorized the catalysts into five groupings based on the work of Herman (Herman, 1991):

- Modified high pressure methanol catalysts.
- Modified low pressure methanol catalysts.
- Modified Fischer-Tropsch (FT) catalysts.
- Alkali-doped sulfides (modified methanation).
- Other, which includes alternate catalysts, such as Rhodium based catalysts, which are not specifically used for mixed alcohols but have been developed for more selective alcohols synthesis.

Others (Smith, et al., 1992) (Forzatti, et al., 1991) group them simply into three categories:

- Modified methanol catalysts.
- Modified Fischer-Tropsch catalysts.
- Others.

This helps to eliminate confusion that can arise when, for example, molybdenum-based sulfide catalysts are promoted with cobalt or other similar FT elements, thus representing both alkali-doped sulfides and modified-FT groupings.

Since the 1920s scientists have known how to produce mixtures of methanol and other alcohols by reacting syngas over certain catalysts. They observed that when methanol catalysts (Zinc or Copper based) were promoted with alkali (Na, K, etc.), and certain reaction conditions were met (temperature, pressure) a mixture of methanol and higher alcohols resulted. At the same time, Fischer and Tropsch observed that hydrocarbon synthesis catalysts produced linear alcohols as byproducts. From this they were able to develop the "Synthol" process for producing higher alcohols. Some development continued, but it wasn't until the 1970s oil embargo that significant interest re-appeared, and researchers renewed efforts to produce higher alcohols for liquid fuels applications. As petroleum prices dropped research declined until the mid-to-late 1980s when interest was driven by environmental aspects, specifically oxygenated fuel and octane enhancement.

In 1990, the Clean Air Act mandated the seasonal use of oxygenated compounds in gasoline in specific regions of the U.S. Soon after, methyl-tertiary-butyl ether (MTBE) became the oxygenate of choice because refiners could cost-effectively produce it using existing products. Since then only a few researchers have been active in the field of higher alcohol synthesis. Some research in the 90s focused on mixed alcohols as a product of coal gasification. Other work continued in Europe, especially by Snamprogetti. Within the past 5 years, however, a desire to

find alternatives for petroleum based fuels, and the increasing popularity of ethanol fuels, has again brought this research area to life.

Three particular terms require definition before the discussion proceeds. Please refer back to these as needed. Within literature, data can often be confusing if these terms aren't well understood or defined.

> *Productivity* – the amount of product generated, either all alcohols or a specific alcohol, per unit time for a certain weight of catalyst loaded. Units are typically g-product / kg catalyst / hr. Typical productivities for mixed alcohol production can range from below 150 to near 400 g/kg/hr. In comparison, methanol synthesis productivities can often be over 1000 g/kg/hr, or 1 kg/kg/hr. Less commonly, productivity refers to concentrations of liquid product per unit of time, g/L/hr. This is often referred to as "Yield".
>
> *Conversion* – usually the amount of carbon monoxide (CO, molar basis) converted to all products. Typically found by: $(CO_{initial} - CO_{final}) / CO_{initial}$
> Sometimes researchers present conversions exclusive of CO_2 produced but not often. Typical single-pass conversions for mixed alcohols range from 10% - 40%.
>
> *Selectivity* – selectivities are typically presented on a %-molar basis. Selectivity refers to the fraction of CO converted to a specific product. For example, if a reaction achieves a 20% conversion of CO, and 75% of that CO (or 15% of the total CO) is converted to alcohols, then the total alcohols selectivity is said to be 75%. Selectivities are sometimes shown on a CO_2-exclusive basis.
>
> *Yield* – see Productivity.

The overall stoichiometric reaction for higher alcohol synthesis (HAS) can be summarized as:

$$n\,\mathrm{CO} + 2n\,\mathrm{H_2} \rightarrow \mathrm{C}_n\mathrm{H}_{2n+1}\mathrm{OH} + (n-1)\,\mathrm{H_2O}$$

The value of "*n*" typically ranges from 1 to 8. The stoichiometry suggests an optimum H_2/CO ratio of 2, however many of these catalysts also display significant water-gas shift activity. This shifts the optimal ratio closer to 1.0 and also shifts the primary byproduct from water to carbon dioxide (CO_2). The overall reaction is exothermic; therefore, maintaining constant reaction temperature is an important design consideration. The reactions become more exothermic for greater values of "*n*". Secondary reactions and other side products will depend on which catalyst system is used. Different kinetic pathways exist for each catalyst system.

Catalysts

Modified Methanol Catalysts

The term "modified" methanol catalyst refers to the addition of an alkali promoter and other active elements to a methanol catalyst to shift the product slate from methanol to higher

branched primary alcohols. High temperature methanol catalysts typically contain Zinc (Zn) Chromium oxides (or manganese chromium oxides), while lower temperature methanol catalysts use Copper (Cu) as the active component. The reaction yields primary branched alcohols, among which 2-methyl-1-propanol (isobutanol) is a main (and thermodynamically favored) component. Aldehydes, esters, ketones, and ethers are also formed, along with large amounts of CO_2.

Typical high pressure and low pressure reaction conditions (as provided by Nexant) are listed in Table 4. In general there is a trade-off between maximizing CO conversion and maximizing the higher alcohol selectivity and yield.

Table 4. "Typical" Modified Methanol Catalyst Conditions

	H_2/CO ratio	Temperature (°F)	Pressure (psia)	CO conversion (per pass)	Total Alcohol Yield (g/kg/hr)	C_2+OH Selectivity
High Pressure	1	572 to 800	1,810 to 3,625	5 to 20%	203	
Low Pressure*	1.0 to 1.2	482 to 752	725 to 1,450	20 to 60%		41.9 wt%

* Lurgi: Octamix

Snamprogetti (also referred to as SEHT – Snamprogetti, Enichem and Haldor Topsoe) and Lurgi were two of the leading technology developers of modified methanol catalysis in the 1980s and 1990s. SEHT had a MAS (Metanolo piu Alcoli Superiori - methanol plus higher alcohols) process and Lurgi developed what they called OCTAMIX, each developing pilot scale plants and data. The latest information available to NREL shows each process technology is no longer available. One technology developer still involved in this area is the Standard Alcohol Company of America. They have a bench-scale process to produce a mixed alcohols product known as Envirolene™. Envirolene is composed of methanol through octanol, with approximately 50% of the product as ethanol. The process uses a modified high pressure methanol catalyst, and the company is currently seeking funding for a pilot plant.

The proposed kinetic pathway for modified methanol catalysts to branched alcohols is through a base-catalyzed aldol condensation reaction. Carbon chain growth schemes have been developed that describe the product distribution relatively accurately. This is shown in Figure 3.

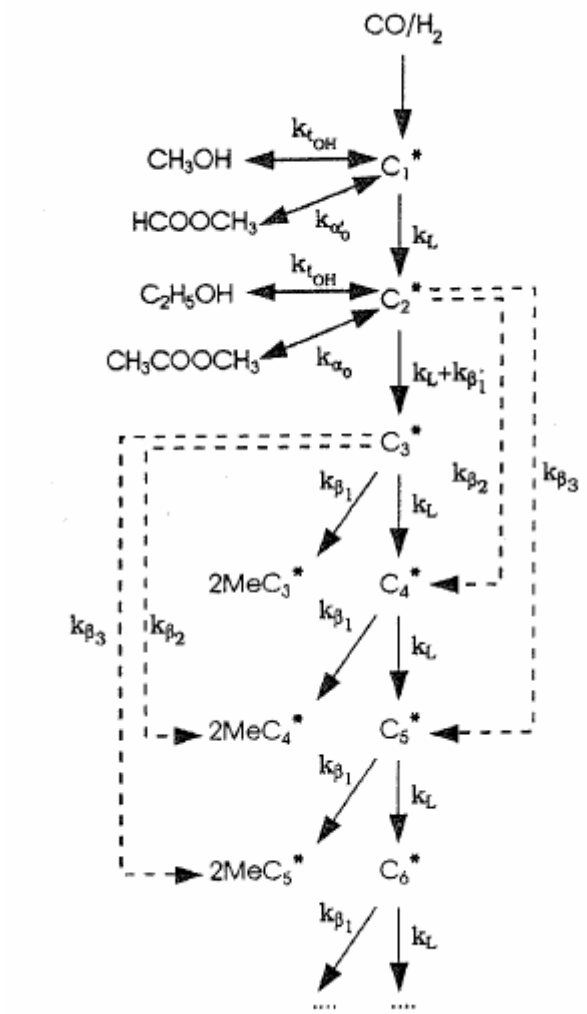

Figure 3. Reaction Network of Smith, et.al., 1991 for the Methanol – Higher Alcohol Synthesis over Cu/ZnO-based

Modified Fischer-Tropsch Catalysts

Modified Fischer-Tropsch catalysts, on the other hand, are FT catalysts that are alkali-promoted. The two most common FT active elements are Iron (Fe) and Cobalt (Co), but Nickel (Ni) is considered to have FT activity also. The addition of the alkali promoter helps to shift the product slate from hydrocarbons to linear alcohols, although hydrocarbons remain a significant byproduct. Typical reaction conditions are 220 – 350°C (430 – 660°F) and 5-20 MPa (725 – 2,900 psia). One commonly-researched catalyst system is a MoS_2-based system that is alkali and/or Cobalt-promoted. This has the tendency to increase ethanol and other higher alcohols selectivity. CO_2 is still a substantial byproduct due to water-gas shift (WGS) activity of the catalysts. Other potential byproducts include aldehydes, esters, carboxylic acids, and ketones.

The primary technology developers for these catalysts were Dow/Union Carbide (UCC) and Institut Francais du Petrole (IFP). Dow and UCC jointly developed a sulfided mixed alcohol catalyst based on molybdenum (MoS_2). Sulfided catalysts have the advantage of being sulfur-tolerant (up to 100 ppm) which has the potential to reduce upstream cleanup costs. IFP, in

conjunction with Idemitsu Kosan (Japan), developed a process based on Cu-Co and Cu-Ni catalyst systems. Dow built a 2-ton-per-day (TPD) demonstration plant in 1990 and IFP built a 20 barrel-per-day (BPD) pilot plant in Japan. The latest information available to NREL indicates that Dow is no longer pursuing the commercial development of their mixed alcohol process and IFP has not continued their work since building the pilot plant, and they have no commercial interest in pursuing a mixed alcohols process.

Technology developers that remain active in this area are Power Energy Fuels Inc. (PEFI), Western Research Institute (WRI), and Pearson Technologies. PEFI continues to develop the Ecalene™ technology and process, which is a modification of Dow's Sygmal process using polysulfite catalyst. According to Nexant, progress has not moved beyond the bench scale and a planned 500 gallon/day pilot plant is no longer being pursued. However, 2-3 other pilot plants are under funding consideration using various biomass resources. WRI had worked with PEFI in the past, however currently they are not, but are conducting their own bench-scale experiments, particularly reactor and catalyst testing. Pearson Technologies has developed a 30-ton-per-day biomass gasification and alcohols conversion facility in Aberdeen, MS. A project is under development by the Worldwide Energy Group and the State of Hawaii to demonstrate gasification of sugarcane bagasse and production of ethanol using the Pearson technology on the island of Kauai. Sasol (South Africa) is a world leader in FT fuels and chemicals production as well as technology development. They currently produce a mixture of alcohols within their overall process. However, these are not used for fuels. According to Sasol's website, oxygenates in the aqueous stream from their Sasol Advanced Synthol (SAS) process are separated and purified to produce alcohols, acetic acid, and ketones.

Due to the severe process conditions of higher alcohol synthesis, it would be expected that catalyst life would not be significantly long[b] (Nexant, 2005). As a benchmark, it could be helpful to recognize that the catalyst life for the typical Fe-Co Fischer-Tropsch catalyst can be longer than 5 years. Information on catalyst life is not abundant because most research into HAS is bench scale and not commercial. The majority of information on catalyst life comes from the earlier commercialization attempts. Dow and UCC, for example, found their catalyst operated for over 8 months continuously with little to no process performance degradation.

The proposed kinetics for modified FT catalysts follow different pathways than for modified methanol kinetics. Linear alcohols are formed from a classic CO insertion route for chain growth (C-C bond formation) with termination to alcohols and hydrocarbons. This is shown in Figure 4. More complex kinetic models have reaction networks that account for the simultaneous formation of alcohols, hydrocarbons, and esters.

[b] Meaning, 1 year or less.

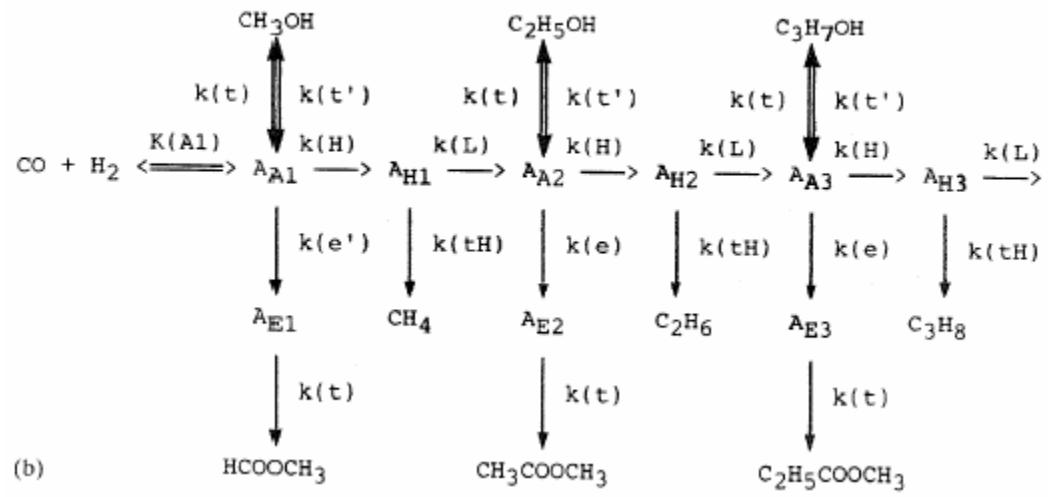

Figure 4. Kinetic Analysis of HAS with Fischer-Tropsch Mechanism

Other Catalysts

Some research has been conducted on alternative reaction systems for mixed alcohols synthesis. This includes more exotic catalytic elements (Ruthenium (Ru), Rhodium (Rh), Palladium (Pd)) as well as synthesis under supercritical conditions. Rh-based catalysts have been primarily developed for selective ethanol synthesis or other oxygenates. One downfall for these catalysts is their low catalytic activity which results in the need for high catalyst loadings and more drastic reaction conditions. Coupling this with their high cost and limited availability creates limited commercialization potential of these processes. For all Group VIII metal catalysts, CO conversion to hydrocarbons will be a significant side reaction. It has been observed that the selectivity to oxygenates of Rh-based catalysts is highly dependent on the support, promoter, and metal precursor used.

Basis for Catalyst Selection

Because the focus of this report is thermochemical production of ethanol, a moly-sulfide-based (MoS_2) system promoted with cobalt and alkali metal salts was chosen as the catalyst system because of its ability to produce linear alcohols (as opposed to branched) and its potential for higher ethanol selectivities. This is a form of original Dow/UCC technology.

Doc #	Title	Date	Author(s)	Company/University Affiliation	Journal / Conference	Synopsis
9542	Synthesis of Higher Alcohols from Syngas over Cu-Co_2O_3/ZnO, Al_2O_3 Catalyst	2005	Mahdavi, V.; M.H. Peyrovi, et.al.	Shahid Beheshti University, Tehran Iran; National Iranian Oil Company, Petroleum Research Institute	Applied Catalysis, Elsevier	Fixed bed flow reactor; changes in activity and selectivity resulting from feed and operating conditions; alcohols selectivity greater than 80%
	Mixed Alcohols from Syngas: State of Technology Final Report	2005	Nexant	Nexant	Subcontract to NREL/DOE	State of technology of mixed alcohols and recommendations for areas of focus for research
	Gridley Ethanol Demonstration Project Utilizing Biomass Gasification Technology: Pilot Plant Gasifier and Syngas Conversion Testing	2005	TSS Consultants	City of Gridley, CA	NREL Subcontract Report SR-510-37581	Pearson Technologies Pilot Gasifier; Rice Straw into Ethanol thermochemically; use PSA to remove CO2 from system; Not much data, this is a publicly available report, supposedly there is a more detailed proprietary report
N/A	Production of Mixed Alcohol Fuels	2004	Lucero, Andrew J.	Western Research Institute	DOE workshop on BLG	Update on efforts to use PEFI's modified MoS2 catalyst; compression costs dominate op costs; temp selection is critical; target alcohol composition given; Single-pass CO conversions up to 20% to alcohols
11631	Solvent Effects on Higher Alcohols Synthesis Under Supercritical Conditions: a Thermodynamic Consideration	2004	Qin, Zhangfeng; et.al.	Institute of Coal Chemistry, Chinese Academy of Sciences	Fuel Processing Technology, Elsevier	Supercritical HAS, used redlich-kwong soave; used various solvents; low ethanol; nice chart of equilibrium constants, standard ethalpies, entropies, and gibbs free energies
9543	Higher-Alcohols Biorefinery: Improvement of Catalyst for Ethanol Conversion	2004	Olson, Edwin S.; et.al.	EERC, North Dakota	Applied Biochem & Biotech	React methanol (from gasification) with ethanol (from biochem) to yield primarily C4 (C3+) alcohols (Guerbet rxn)
	Preliminary Screening - Technical and Economic Assessment of Synthesis Gas to Fuels and Chemicals with Emphasis on the Potential for Biomass-derived Syngas	2003	Spath, P.L.; Dayton, D.C.	National Renewable energy Laboratory (NREL)	Report TP-510-34929	overview of potential for syngas conversion to fuels and chemicals; includes hydrogen, ammonia, methanol, DME, mixed alcohols, oxosynthesis, MTG, isosynthesis, ethanol fermentation, etc. Very good report
11635	Palladium-based Catalysts for the Synthesis of Alcohols	2003	M. Josefina Perez-Zurita; Cifarelli, M.; et.al.	Universidad Central de Venezuela	Journal of Molecular Catalysis, Elsevier	Catalyst analysis from XRD; high methane and methanol selectivities
9527	Synthesis of Higher Alcohols in a Slurry Reactor with CS-promoted Zinc Chromite Catalyst in Decahydronaphthalene	2003	Xiaolei Sun, G.W. Roberts	North Carolina State	Applied Catalysis, Elsevier	Continuous Slurry Reactor; Cs shifts products away from MeOH, towards Higher Alcohols
9535	Fuel from the Synthesis Gas - the Role of Process Engineering	2003	Stelmachowski, Marek, et.al.	Technical University of Lodz, Poland	Applied Energy, Elsevier	MeOH, FT, and HAS, synthesis, slurry phase reactor; simulation
N/A	Alcohol Synthesis over Pre-Reduced Activated Carbon-supported Molybdenum-Based Catalysts	2003	Dadyburjor, D.B., Li, Xianguo; et.al.	West Virginia University; Ocean University of China	Molecules	formation of alcohols at expense of CO conversion; prereduced rather than sulfided; getting lots of HCs
N/A	Co-Production of Fuel Alcohols & Electricity via Refinery Coke Gasification	2003	Ravikumar, Ravi; and Shepard, Paul	Fluor	Gasification Technologies Conf	Use of Power Energy Fuels Inc's Ecalene process for mixed alcohols synthesis in refinery application (Pet Coke); modeling and economic analysis

9519	The Influence of Clay on K_2CO_3/Co-MoS_2 Catalyst in the Production of Higher Alcohol Fuel	2002	Iranmahboob, Jamshid; Hill, Donald	Uconn, Mississippi State	Fuel Processing Technology, Elsevier	Clay had significant impact on HAS when K2CO3 present; oxygenates selectivity of 70%; testing of feed conditions
9536	Alcohol Synthesis from Syngas over K_2CO_3/CoS/MoS_2 on Activated Carbon	2002	Iranmahboob, Jamshid; Hill, Donald	Uconn, Mississippi State	Catalysis Letters	Experimentation; Effects of Temp, H2:CO, GHSV tested; fixed bed; active chemicals on carbon decreased surface area dramatically
9528	Advances in Catalytic Synthesis and Utilization of Higher Alcohols	2000	Herman, R.G.	Lehigh Univ.	Catalysis Today, Elsevier	focus on oxygenates, particularly isobutanol; slurry phase bed and Double Bed designs; some literature results and op conditions reported; injection of EtOH may promote HAS
	The Economical Production of Alcohol Fuels from Coal-derived Synthesis Gas: Final Report, October 1991 - March 1998	1999		West Virginia University	Submitted to National Energy Technology Lab (NETL), Contract #DE-AC22-91PC91034-25	7 years of research on mixed alcohols from MoS2 catalystsl; extensive work; higher alcohol selectivity > 40%; productivity at 200 g/kg/h; hydrocarbon selectivity < 20%; Use Coal feedstock
9545	Synthesis of Higher Alcohols - Enhancement by the Addition of Methanol or Ethanol to the Syngas	1999	Lachowska, M.	Polish Academy of Sciences	React.Kinet.Catal.Lett Elsevier	Increase in C3+alcohols using modified methanol catalyst
N/A	Formation of Ethanol and Higher Alcohols from Syngas	1999	Iranmahboob, Jamshid; Donald Hill	Mississippi State University	Mississippi State University, Thesis Report	Talk of biomass; MoS2; Ph. D. Thesis; unsupported (K2CO3/Co-MoS2), and supported on Clay. Mention of methanol removal and adsorption for kinetic driving force
9515	Selective Synthesis of Mixed Alcohols Catalyzed by Dissolved Base-activated Highly Dispersed Slurried Iron	1999	Mahajan, D. et.al.	Brookhaven National Laboratory	Fuel (Elsevier)	Ultrafine catalyst system, lower temps (250C) and pres (<6MPa); up to 95% selectivity (c1-c4 alcohols); and 80% CO Conversion; nanometer iron oxides "NANOCAT"; synthesis remains a problem
9538	Synthesis of Short Chain Alcohols over a Cs-promoted Cu/ZnO/Cr_2O_3 catalyst	1998	Majocchi, L.; Forzatti, Pio; et.al.	Politecnico di Milano; Snamprogetti SpA	Applied Catalysis, Elsevier	Effect of Temp, CO:H2 ratio, GHSV. Temp is key to Alcohol Productivity, 290 - 315 C are best for C2-C3; HC's minimized
9511	Higher Alcohols from Synthesis Gas Using Carbon-Supported Doped Molybdenum-Based Catalysts	1998	Xianguo Li; Dadyburjor, Dady B. et.al.	West Virginia University	Ind. Eng. Chem. Res. (ACS)	Studied catalyst prep parameters and reaction conditions; catalyst promoted w/ K and/or Co
9537	A Kinetic Model for the Synthesis of High-Molecular-Weight Alcohols over a Sulfided Co-K-Mo/C Catalyst	1998	Gunturu, A.K.; Dadyburjor, D.B., et.al	West Virginia University	Ind. Eng. Chem. Res. (ACS)	Kinetics, recycle reactor, temps and feed variables explored; includes rate expressions
9529	Development of a Process for Higher Alcohol Production via Synthesis Gas	1998	Beretta, A.; Tronconi, E. et.al.	Politecnico di Milano; Snamprogetti SpA	Ind. Eng. Chem. Res. (ACS)	High-temp catalyst; single-stage adiabatic pilot scale reactor, Kinetics developed; targeting oxygenates, ethanol low; simulation of multi-stage adiabatic reactor
9530	High Temperature Calcined K-MoO_3/gamma-Al_2O_3 Catalysts for Mixed Alcohols Synthesis from Syngas: Effects of Mo Loadings	1998	Bian, Guo-zhu, et.al. (Univ. of S&T, China)	University of Sci & Tech, China; Univ of Tokyo	Applied Catalysis, Elsevier	total yields of mixed alcohols decreased but selectivity increased from 3-50%; mainly linear C1-C4, small amt iso-C4
9514	Kinetic Analysis of Mixed Alcohol Synthesis from Syngas over K/MoS_2 Catalyst	1997	Park, T.Y.; Nam, In-sik, et.al.	Pohang Univ. of Sci. & Tech (Postech), Korea	Ind. Eng. Chem Res. (ACS)	K2CO3-promoted-MoS2; mechanistic kinetics models; mixed alcohol formation maximized around 320C
9518	Synthesis of Mixed Alcohols from CO_2 contained syngas on supported MoS_2 catalysts	1997	Gang, Lu, et.al.	East China University of Sci & Tech	Applied Catalysis, Elsevier	CO2 in feed inhibits higher alcohols; product distribution strongly influenced by CO2 and H2O in feed; high H2:CO ratio used; 0-100 ppm H2S

9524	Development of a Mechanistic Kinetic Model of the Higher Alcohol Synthesis over a Cs-doped Zn/Cr/O Catalyst - 1) Model Derivation and Data Fitting	1996	Beretta, A.; Forzatti, Pio, et.al.	Politecnico di Milano; Snamprogetti SpA	Ind. Eng. Chem. Res. (ACS)	Kinetics model; goal is branched alcohols, not linear because of better octane properties
9525	A Kinetic Model for the Methanol-Higher Alcohol Synthesis from $CO/CO_2/H_2$ over Cu/ZnO-based Catalysts Including Simultaneous Formation of Methyl Esters and Hydrocarbons	1994	Breman, B.B.; Beenackers, A.C.C.M.; et.al.	University of Groningen, The Netherlands	Chemical Engineering Science, Pergamon	Overview of past work on modified methanol catalysts and Kinetics; methanol primary product; claims to be most accurate kinetics models to date; substantial HC's produced as unwanted byprod.
9526	Thermodynamics of Higher Alcohol Synthesis	1993	Mawson, S.; Roberts, G.W.; et.al.	North Carolina State	Energy & Fuels	Aspen Plus simulation using RGIBBS; C4 alcohols are dominant product, especially as isobutyl; conversions > 90%; Thermodynamics
11636	SiO2-supported Biometallic Ruthenium Cluster-derived Catalysts for Selectivity and Activity Control in CO Hydrogenation Toward C1-C5 Alcohols	1992	Xiao, F.; Ichikawa, M.; et.al.	Hokkaido University	Journal of Molecular Catalysis, Elsevier	Ruthenium Catalyst;
9517	The Thermodynamics of Higher Alcohol Synthesis	1992	Roberts, G.W., et.al.	North Carolina State	Symposium on NG upgrading II, Division of Petroleum Chem, Inc., ACS	Basically same info as presented in 1993,
9523	An Overview of the Higher Alcohol Synthesis	1992	Smith, K.; Klier, K.	Univ. British Columbia; Lehigh	Symposium on NG upgrading II, Division of Petroleum Chem, inc., ACS	Good brief review on catalyst choices and Operating Conditions at that time, including Rh/SiO2; target for octane seemed to be 70:30 c2+/c1 (required for gasoline blending?)
9521	Non-Stoichiometric Spinel-type Catalysts for the Synthesis of Methanol and Higher Alcohols	1992	Trifiro, F., et.al.	Dipartimento di Chimica Industriale e dei materiali, Bologna, Italy	Symposium on Octane and Cetane Enhancement Processes for Reduced-emissions Motor Fuels, Division of Petroleum Chemistry, ACS	Non-stoichiometric spinel-type solid oxides; again shows propensity of K to shift towards higher alcohols
11632	The Conversion of Synthesis Gas to Higher Oxygenated Fuel on Rh-based Catalysts: Effect of Chemical Additives	1991	Balakos, M.W., Chaung, S. S. C,	University of Akron	Fuel Science and Technology International	Rhodium catalyst, high selectivities to CH4 & C2+ Oxygenates
9522	Higher Alcohol Synthesis	1991	Forzatti, Pio, et.al.	Politecnico di Milano; Snamprogetti SpA	Catal. Rev. - Sci. Eng	Extensive writeup (book chapter?) on status of HAS catalysts; includes kinetics and thermodynamics; and commercial designs from Lurgi, IFP, Snamprogetti
	Production of Oxygenates from Synthesis Gas: A Technology Review for US Dept of Energy for Design of Generic Coal conversion Facilities	1991	Pittsburgh Energy Technology Center	M.W. Kellogg Company	Contract #DE-AC22-91PC89854	Oxygenates overview, including mixed alcohols; discuss dow technology as 85% selectivity and CO perpass conversion of 20-25%; effect of catalyst additives
	Classical and Non-classical Routes for Alcohol Synthesis	1991	Herman, R.G.	Lehigh University	Book Chapter, New Trends in CO Activation, L. Guczi, Ed. Elsevier	Impressive summary of state of mixed alcohols technology. Includes detailed kinetics work and experimental results to date
9539	Catalytic Conversion of Synthesis Gas to Methanol and Other Oxygenated Products	1991	Stiles, Alvin, et.al.	University of Delaware	Ind. Eng. Chem. Res.; ACS	Experiments, bench-scale, high aldehyde production based on conditions; benchmark established on pure methanol; alkaline earth & cobalt additives
9531	Kinetic Modelling of Higher Alcohol Synthesis over Alkali-promoted Cu/ZnO and MoS_2 Catalysts	1990	Smith, K. Herman, R.; Klier, K.	Lehigh University	Chemical Engineering Science	Kinetics of both modified FT & modified MeOH; different reaction pathways for each

9541	Production of Mixed Alcohols from Synthesis Gas	1990	Uchiyama, S., et.al.	Idemitsu Kosan Co.	Sekiyu Gakkaishi	Comparison of modified FT & modified MeOH Catalysts; includes summary of operating conditions for industry: Halder-Tropsche/Snamprogetti/Enichem, Dow-Union Carbide, IFP/Idemitsu-Kosan; Lurgi; some economics
9568	Production of Methanol-higher Alcohol Mixtures from Natural Gas via Syngas Chemistry	1990	Coutry, Chaumette, Raimbault, Travers	French Petrol Institute (IFP)	European Applied Research Conf. On Natural Gas	Enichem; Snam Progetti; Haldor Topsoe
	Production of Methanol-higher Alcohol Mixtures from Natural Gas via Syngas Chemistry	1990				Lurgi
	Production of Methanol-higher Alcohol Mixtures from Natural Gas via Syngas Chemistry	1990				IFP & Idemitsu-Kosan
	Production of Methanol-higher Alcohol Mixtures from Natural Gas via Syngas Chemistry	1990				Dow, Union Carbide
	Production of Methanol-higher Alcohol Mixtures from Natural Gas via Syngas Chemistry	1990				C1 Chem Group (Japan), Texaco, others
9532	Synthesis of Alcohols from Carbon Oxides and Hydrogen. 4. - Lumped Kinetics for the Higher Alcohol Synthesis over a Zn-Cr-K Oxide Catalyst	1987	Tronconi, E.; Forzatti, P; et.al.	Politecnico di Milano; Snamprogetti SpA	Ind. Eng. Chem. Res. (ACS)	Kinetics; discussions of CO2 recycle
9512	Mixed Alcohols from Synthesis Gas	1986	Quarderer, George	Dow Chemical	AIChE Spring National Meeting	Very low water, 50:50 MeOH/HAS split; economics provided; reactor designs considered as well; lots of good data
SRI PEP #85-1-4	Mixed Alcohols from Syngas	1986	Nirula, Satish	SRI	PEP Review #85-1-4	Dow, Union Carbide; includes economics; also includes state of art discussion

Appendix K

Alcohol Synthesis Kinetics

A more rigorous method for modeling the production of alcohols or other products via synthesis is to use kinetics-based reactions to represent the multiple reactions that occur. Used with the appropriate reactor type, a good kinetics-based model can more accurately predict the effect of varying inlet conditions to the synthesis reactor, especially when unconverted syngas or unwanted co-products (i.e., methanol, hydrocarbons) are recycled to the reactor inlet.

Two major barriers to using kinetics-based models are 1) the need for high-quality experimental data to determine the many parameters required for accurate predictions – assuming that a suitable model can be found for the system of equations – and 2) even with data suitable for estimating model parameters, the resulting model is only truly representative of the catalyst used in the experiments over the range of operating conditions explored. Using the model outside the range of operating conditions introduces increased uncertainty the more removed the estimate is from the experimental conditions used to develop the model. Catalyst performance is very sensitive to many factors that can arise during their production. Two seemingly identical catalysts based on chemical formulation can vary greatly in performance because of preparation techniques and catalyst support characteristics (surface area, crystal structure).

Heterogeneous catalysts such as those used in most synthesis work today, are very sensitive to a number of factors including supports, amounts and types of added promoters or inhibitors that help tune the catalyst to promote desired reactions while inhibiting undesirable reactions. An "optimum" catalyst is usually a compromise of competing and interacting promoters, inhibitors, and supports to give a catalyst with the "best" cumulative properties. When precious metals are used, economics also become a major factor in determining the catalyst formulation.

Very little published data exist for the MoS_2-based catalysts that are suitable for developing a reasonable model of the alcohol synthesis together with the very important competing reactions that reduce the desired product yields. Gunturu (Gunturu, et al., 1998; Gunturu, 1997; Gunturu, et al., 1999) published relevant data from thesis work done at the University of West Virginia. The data were used to develop a system of Langmuir-Hinshelwood type reactions to describe a five-reaction lumped kinetic scheme. Recently, researchers in Italy, using the same data, generated a model using the same reaction scheme but with slightly different equations and parameters. The procedure for estimating the parameters is not discussed here, but can be found in detail in Larson, et al. (Larson, et al., 2006) and are presented here in Table 1.

Table 1. Kinetic parameter estimates from Larson, et al. Blank cells do not have values for the corresponding rate equation parameter and rate equation.

Parameter	Methanol	Ethanol	Propanol	Hydrocarbons
A_m, A_e, A_p, A_h	14.6233	3.0518	0.2148	9.3856
E_m, E_e, E_p, E_h	143.472	24.986	89.3328	95.416
n_m, n_e, n_p, n_h	3	1	1	1
K_1	7.6393E-9			
K_2	0.6785			
K_3	0.9987			
K_e		0.7367		
K_p			0.6086	
K_h				1.2472
K_z	0.8359			

The rate equations were created using the typical Langmuir-Hinshelwood kinetic approach found in most catalyst kinetics textbooks. Equation 1 is the gross rate of methanol production. It is the only rate equation in the set that has a reverse reaction component and therefore an equilibrium value. Chemical equilibrium is reached when the partial pressure of methanol is sufficiently high to cause the reverse reaction rate, the dissociation of methanol to CO and H_2, plus the consumption rate of methanol to other products, to equal the forward reaction rate of CO and H_2 to make methanol. Given sufficient time in an active catalyst bed, the methanol concentration will reach an equilibrium state. The equilibrium value will include the effects of methanol being consumed to make ethanol or methane as described by equations 4 and 6, respectively.

$$r_{CH3OH}^{gross} = \frac{A_m e^{-(E_m/R)(1/T-1/T_{cp})}\left(\left[\frac{p_{CO}}{p_{CO,\,cp}}\right]\left[\frac{p_{H2}}{p_{H2,\,cp}}\right]^2 - \frac{1}{K_{eq}}\left[\frac{p_{CH3OH}}{p_{CH3OH,\,cp}}\right]\right)}{\left(1+K_1\left[\frac{p_{CO}}{p_{CO,\,cp}}\right]+K_2\left[\frac{p_{H2}}{p_{H2,\,cp}}\right]+K_3\left[\frac{p_{CH3OH}}{p_{CH3OH,\,cp}}\right]\right)^{nm}} \tag{1}$$

where

$$K_{cp} = \frac{p_{CH3OH,\,cp}}{p_{CO,\,cp}\left(p_{H2,\,cp}\right)^2} \tag{2}$$

and

$$K_{eq} = \frac{K_a}{K_z K_{cp}} \tag{3}$$

$$r_{C_2H_5OH}^{gross} = \frac{A_e e^{-(E_e/R)(1/T-1/T_{cp})}\left[\dfrac{p_{CH_3OH}}{p_{CH_3OH,\,cp}}\right]}{\left(1+K_e\left[\dfrac{p_{CH_3OH}}{p_{CH_3OH,\,cp}}\right]\right)^{n_e}} \tag{4}$$

$$r_{C_3H_7OH}^{gross} = \frac{A_p e^{-(E_p/R)(1/T-1/T_{cp})}\left[\dfrac{p_{C_2H_5OH}}{p_{C_2H_5OH,\,cp}}\right]}{\left(1+K_p\left[\dfrac{p_{C_2H_5OH}}{p_{C_2H_5OH,\,cp}}\right]\right)^{n_p}} \tag{5}$$

$$r_{HC}^{gross} = \frac{A_h e^{-(E_h/R)(1/T-1/T_{cp})}\left[\dfrac{p_{CH_3OH}}{p_{CH_3OH,\,cp}}\right]}{\left(1+K_h\left[\dfrac{p_{CH_3OH}}{p_{CH_3OH,\,cp}}\right]\right)^{n_h}} \tag{6}$$

The other rate equations describe presumed irreversible reactions of methanol to ethanol, ethanol to propanol, and methanol to methane. Ethanol can react further with H_2 and CO to make propanol. Implicit in this set of equations is the simplifying assumption that any products generated other than methanol, ethanol or propanol produce methane even though in higher molecular weight hydrocarbons are observed experimentally. Small amounts of butanol and pentanol, both expected and experimentally observed, have been ignored in the analysis since CO conversions were low resulting in minimal production of increasingly higher alcohols.

Using the rate equations above, plus a rate equation for the water-gas-shift reaction , a system of differential equations and initial conditions can be easily written for a plug flow reactor, as in this report, or for a Continuous Stirred Tank Reactor (CSTR). The solution of the system of ordinary differential equations was programmed into the commercially available equation solver, PolyMath, to evaluate the kinetics over a range of conditions.

Examples of the results given by the model are shown in Figure 1 and Figure 2. In the first case the methanol rate reaches a constant value quickly meaning it is consumed at the same rate it is produced. In the second case methanol was “added” to the reactor inlet to make 1 mol% concentration. CO and H_2 inlet flow was reduced equally to keep molar inlet flow the constant. The methanol has a negative rate of production initially and then reaches a constant flow rate at a value slightly below 2000 lb/hr. The ethanol flow rate is significantly higher than the case with no methanol added to the feed.

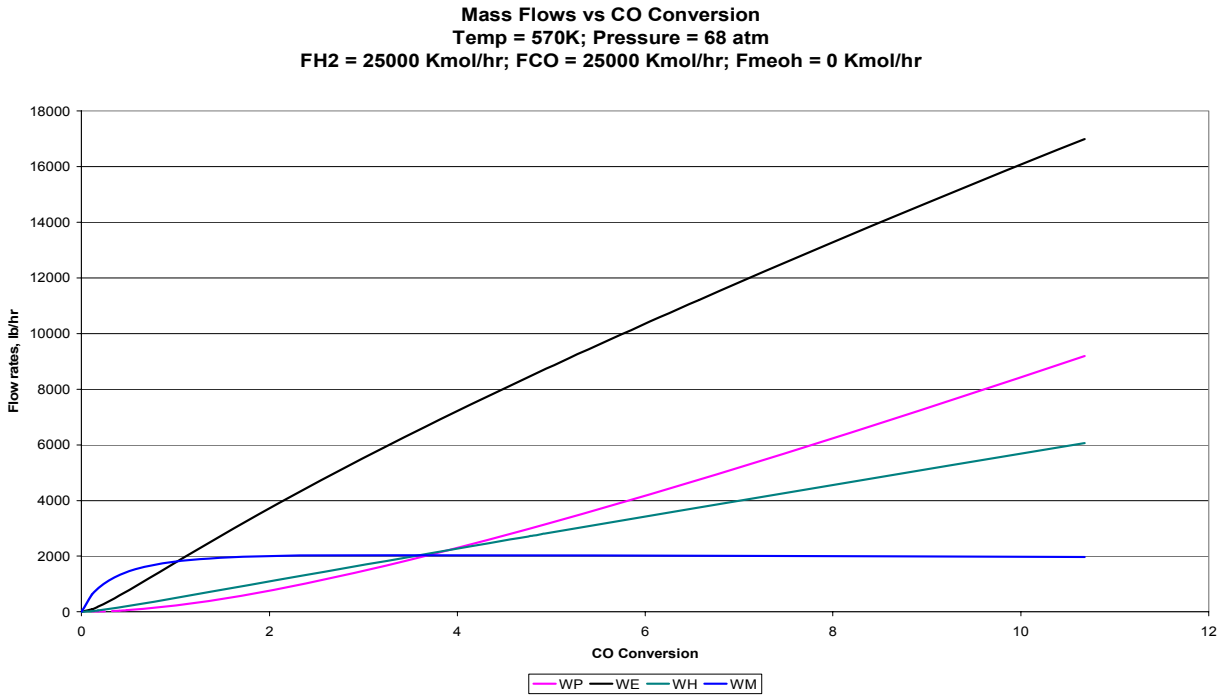

Figure 1. Mass Flow Rates of the Synthesis Reactions vs. CO Conversion in a Isothermal, Plug-Flow Reactor at a WHSV of 1000 L-kgcat^{-1}-hr^{-1}

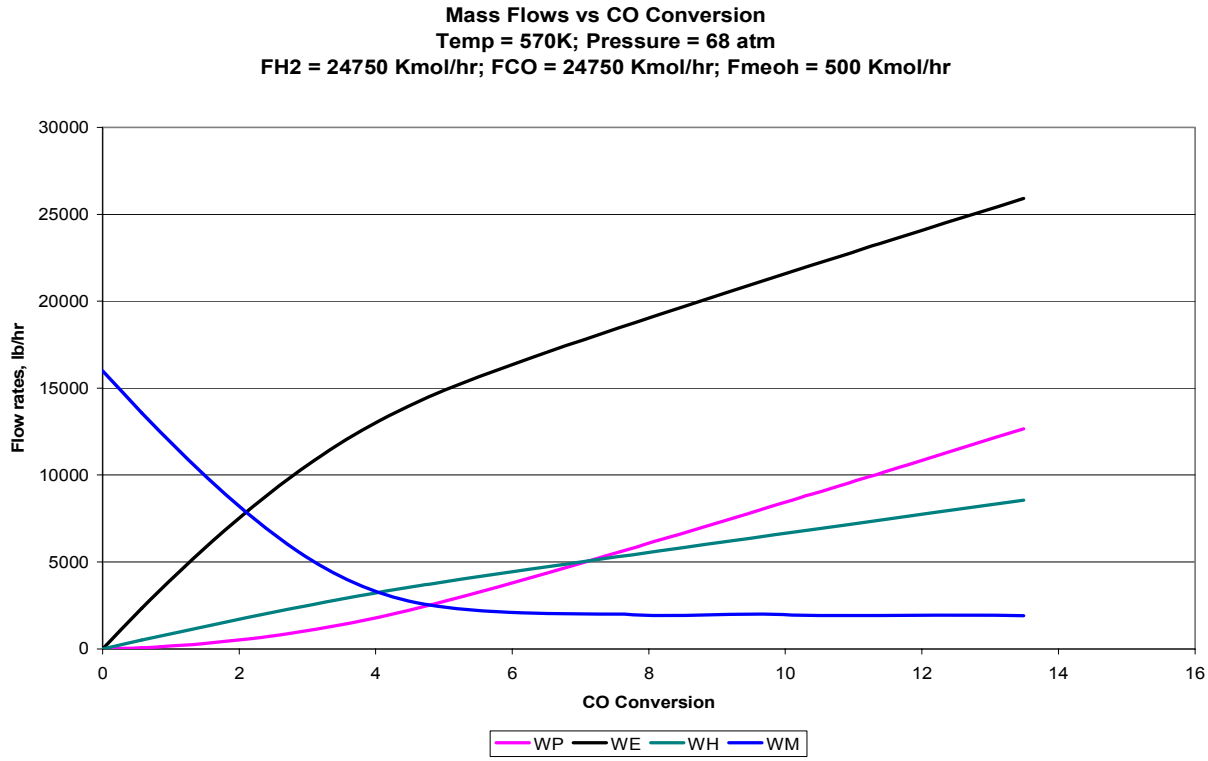

Figure 2. Mass Flow Rates of the Synthesis Reactions vs. CO Conversion in a Isothermal, Plug-Flow Reactor at a WHSV of 1000 L-kgcat^{-1}-hr^{-1}

For the catalyst used to develop this model, the CO conversion is relatively low at 570K and 68 atm pressure. With no methanol recycle to the reactor, the CO conversion is 10.7% with an ethanol yield of 17000 lb/hr. Adding methanol to the reactor inlet increases the CO conversion to 13.5% with an ethanol yield of 25,900 lb/hr. Adding methanol to the synthesis reactor appears to improve the catalyst performance for making ethanol. However, there is insufficient methanol exiting the reactor to meet the inlet demands. At this temperature and pressure, a lower inlet methanol concentration is needed to be sustainable in a process without modifying the process to produce more methanol.

Values of CO conversion and product rates at the reactor outlet for a plug flow reactor at 68, with and without methanol added to the inlet, are given in **Error! Reference source not found.** for the kinetic model. The first column is for no methanol added to the inlet stream. The second column has 1 mol% methanol in the inlet. The GHSV is approximately 1000 L-kgcat^{-1}-hr^{-1} for all cases shown, which is significantly less than the experimental condition at which the kinetic parameters were estimated for the kinetic models.

Table 2. Results From the Kinetic Model at 68 atm Pressure

	MeOH @ inlet = 0 Kmol/hr	**MeOH @ inlet = 500 Kmol/hr**
570K	XCO = 5.67	XCO = 6.38
	MeOH = 2023	MeOH = 1974
	CH_4 = 3237	CH_4 = 5770
	EtOH = 9861	EtOH = 19600
	PrOH = 3851	PrOH = 6543
610K	XCO = 27.08	XCO = 25.94
	MeOH = 4282	MeOH = 4197
	CH_4 = 26400	CH_4 = 28800
	EtOH = 25600	EtOH = 28300
	PrOH = 21400	PrOH = 23800

At 570K, adding methanol to the inlet gas causes the rates of ethanol and propanol production to increase significantly with little change in the CO conversion. The methanol equilibrium rate is approximately 2000 Kmol/hr at this temperature. Increasing the temperature to 610K greatly increases the conversion of CO and of the product yields. However, the methane production has increased relative to higher alcohols. The effect of adding methanol at 610K is less pronounced than at 570K. The CO conversion decreases slightly and the alcohol yields are only slightly increased. The methanol equilibrium rate has increased at 610K to approximately 4200 Kmol/hr. In the "methanol added" cases shown, there is insufficient methanol exiting the reactor to supply the inlet after separating the methanol from the other alcohols. A sustainable level would be reached using a lower methanol concentration at the inlet. Higher conversion can also be achieved by decreasing the GHSV although this will require a larger reactor and more catalyst. The optimum combination involves economics to determine when it is infeasible to increase the capital and catalyst costs to increase production.

The effect of adding methanol on the ethanol yield suggests that other configurations may be more effectively used to maximize ethanol production. Since the methanol production at the

reactor exit is limited by chemical equilibrium, the amount of methanol that can be recycled to the reactor is also limited. Instead of recycling only methanol produced from a mixed alcohol catalyst, it may be possible to economically split the main syngas flow with one portion going to a methanol synthesis reactor to make methanol and the remaining fraction going to the mixed alcohol reactor where the methanol is added to the syngas before entering the reactor. It could also be possible to do the reaction in series with the total syngas going through a methanol synthesis catalyst first followed the mixed alcohol catalyst. The methanol catalyst section would need to be sized to give only partial conversion to methanol, contrary to the way these reactors are typically operated when methanol is the desired end product. These alternate designs would require other factors to be considered, such as lower sulfur and CO_2 concentrations for methanol synthesis relative to the mixed alcohol catalyst used.

As more data become available, the kinetic model can be updated to include different catalysts and expanded operation ranges, especially in regards to the amount of methanol and CO_2 that can be fed to the reactor without adversely affecting product selectivity and CO conversion.

References

Gunturu, A.; et.al. ”A Kinetic Model for the Synthesis of High-Molecular-Weight Alcohols over a Sulfided Co-K-Mo/C Catalyst.” *Ind. Eng. Chem. Res.* Vol. 37, 1998. pp. 2107 – 2115.

Gunturu, A.K., Kugler, E.L., Cropley, J.B., Dadyburjor, D.B., “A Kinetic Model for the Synthesis of High-Molecular-Weight Alcohols over a Sulfided Co-K-Mo/C Catalyst”, Chapter 5 in “The Economical Production of Alcohol Fuels from Coal-Derived Synthesis Gas”, Final Report, Contract # DE-AC22-91PC91034-25, West Virginia University Research Corporation on behalf of West Virginia University, March 1999.

Gunturu, A.K., “Higher-Alcohol Synthesis from Carbon Monoxide and Hydrogen: Kinetic Studies Over MoS2-Based Catalysts”, M.S. Thesis in Chemical Engineering, West Virginia University, Morgantown, West Virginia, 1997.

Larson, E.D., Consonni, S., Katofsky, R.E., Iisa, K. Frederick, J., “A Cost-Benefit Assessment of Gasification-Based Biorefining in the Kraft Pulp and Paper Industry, Volume 2, Detailed Biorefinery Design and Performance Simulation”, Final Report under contract DE-FC26-04NT42260 with the U.S. Department of Energy and with cost-sharing by the American Forest and Paper Association, December 2006.

REPORT DOCUMENTATION PAGE

Form Approved
OMB No. 0704-0188

The public reporting burden for this collection of information is estimated to average 1 hour per response, including the time for reviewing instructions, searching existing data sources, gathering and maintaining the data needed, and completing and reviewing the collection of information. Send comments regarding this burden estimate or any other aspect of this collection of information, including suggestions for reducing the burden, to Department of Defense, Executive Services and Communications Directorate (0704-0188). Respondents should be aware that notwithstanding any other provision of law, no person shall be subject to any penalty for failing to comply with a collection of information if it does not display a currently valid OMB control number.
PLEASE DO NOT RETURN YOUR FORM TO THE ABOVE ORGANIZATION.

1. REPORT DATE *(DD-MM-YYYY)*
April 2007

2. REPORT TYPE
Technical Report

3. DATES COVERED *(From - To)*

4. TITLE AND SUBTITLE
Thermochemical Ethanol via Indirect Gasification and Mixed Alcohol Synthesis of Lignocellulosic Biomass

5a. CONTRACT NUMBER
DE-AC36-99-GO10337

5b. GRANT NUMBER

5c. PROGRAM ELEMENT NUMBER

6. AUTHOR(S)
S. Phillips, A. Aden, J. Jechura, D. Dayton, and T. Eggeman

5d. PROJECT NUMBER
NREL/TP-510-41168

5e. TASK NUMBER
BB07.3710

5f. WORK UNIT NUMBER

7. PERFORMING ORGANIZATION NAME(S) AND ADDRESS(ES)
National Renewable Energy Laboratory
1617 Cole Blvd.
Golden, CO 80401-3393

8. PERFORMING ORGANIZATION REPORT NUMBER
NREL/TP-510-41168

9. SPONSORING/MONITORING AGENCY NAME(S) AND ADDRESS(ES)

10. SPONSOR/MONITOR'S ACRONYM(S)
NREL

11. SPONSORING/MONITORING AGENCY REPORT NUMBER

12. DISTRIBUTION AVAILABILITY STATEMENT
National Technical Information Service
U.S. Department of Commerce
5285 Port Royal Road
Springfield, VA 22161

13. SUPPLEMENTARY NOTES

14. ABSTRACT *(Maximum 200 Words)*
This process design and technoeconomic evaluation addresses the conversion of biomass to ethanol via thermochemical pathways that are expected to be demonstrated at the pilot level by 2012.

15. SUBJECT TERMS
process design; thermochemical; pilot; cellulosic; ethanol

16. SECURITY CLASSIFICATION OF:			17. LIMITATION OF ABSTRACT	18. NUMBER OF PAGES	19a. NAME OF RESPONSIBLE PERSON
a. REPORT	b. ABSTRACT	c. THIS PAGE			19b. TELEPHONE NUMBER (*Include area code*)
Unclassified	Unclassified	Unclassified	UL		

Standard Form 298 (Rev. 8/98)
Prescribed by ANSI Std. Z39.18

F1147-E(12/2004)