Deepwater R&D - Modeling

Sandy Butterfield

DOE Program Implementation Meeting
November 17 – 18, 2004

Outline

- Background
- Status of design tools
- Industry collaboration
- Modeling Needs for Offshore
- Code Development Plans
- Benefits

Background

- Modeling dynamic behavior is central to any design improvement
- Offshore turbines will require even more sophisticated modeling:
  - multiple stochastic loading sources (overlapping spectra?)
  - Flexible blades, high tip speed, coupling
  - Far more flexible support structure (especially floater)
  - stronger system coupling
  - Controls more important
- Current wind energy success resulted from testing/model tuning design cycle that may not be as affordable for offshore, forcing greater pressure on model accuracy
- Stability could become an important issue

Aeroelastic Analysis Flowchart
(the Heart of Iterative Design Process and Improvements)

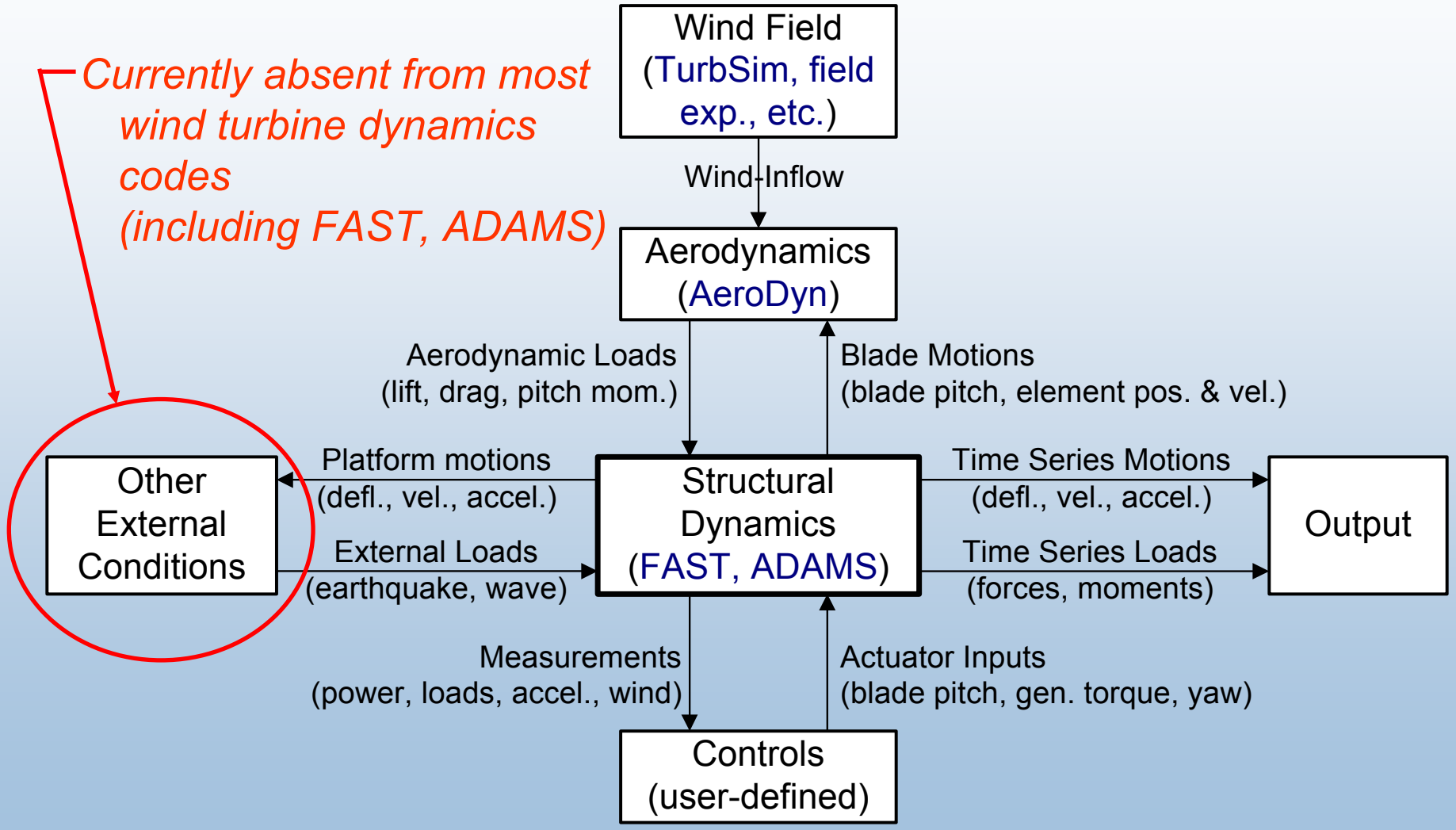

Current Suite of Design Tools

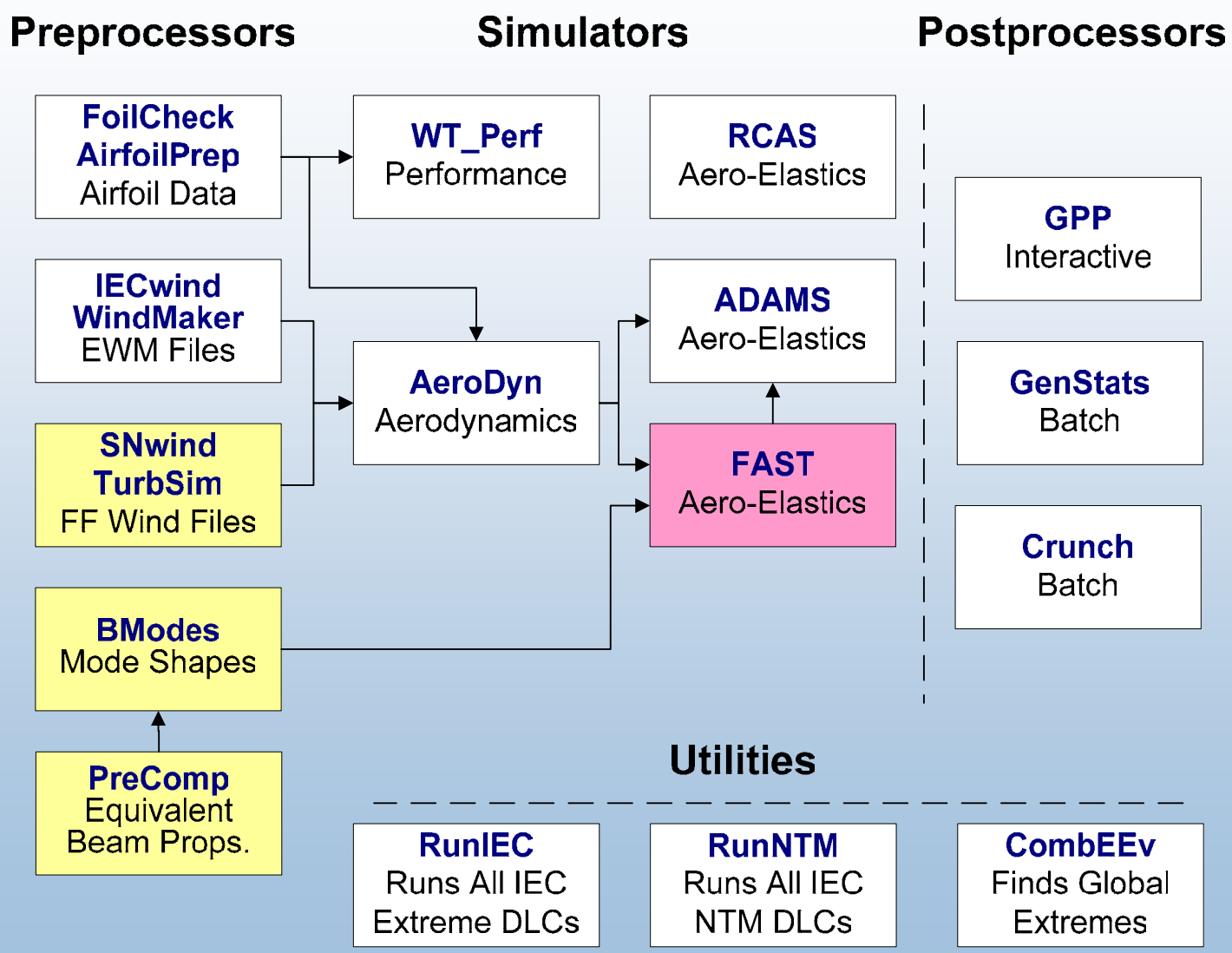

Major FAST Upgrade

- Linearization
- SimuLink interface
- Controls DLL
- FAST/ADAMS converter
- Furling
- Certification (including ADAMS)

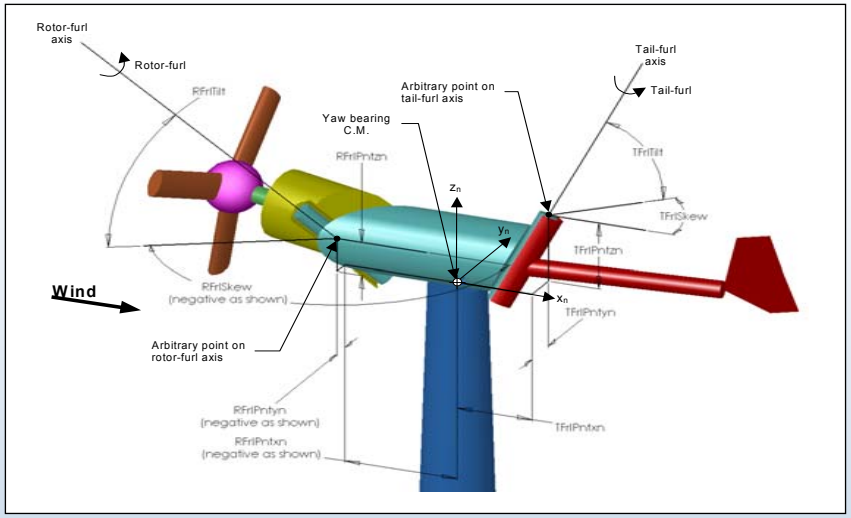

Layout of a 3-Bladed, Upwind, Furling Turbine: Furl Axes

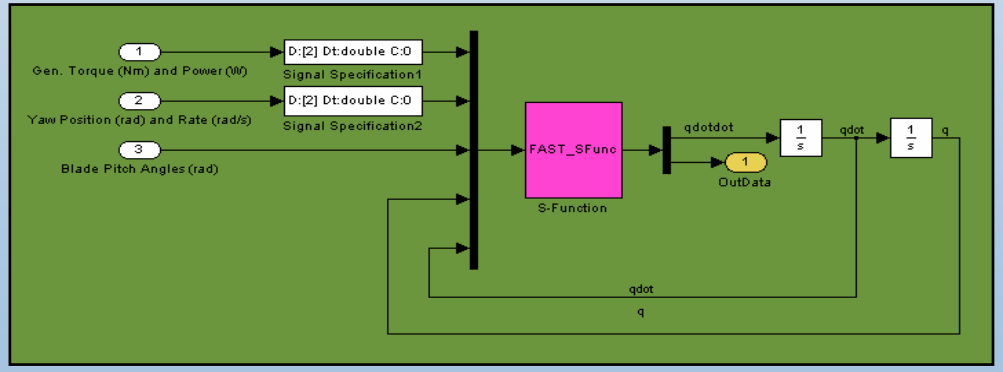

FAST Wind Turbine Block

Collaboration and Users

- Codes Road Show (GE, GEC, Windward)
  - Demonstrate improvements
  - Get feedback
  - Needed additional features
- IEA Offshore Benchmarking
  - verify codes
  - Identify modeling weaknesses
  - focus R&D on modeling weaknesses

	# Users of all codes	ADAMS	FAST
US Academic	22	5	15
US Government	20	8	9
US Industry	48	13	24
International	28	8	16
Total	118	34	64

Modeling Needs for Offshore

- Wave loading (linear, stream function, breaking)
- Floating platform hydrodynamic simulator
- Blade Coupling (elastic twist, high flexibility, high tip speed)
- Stability analysis (platform, rotor, controls)
- Benchmarking (code to code comparisons)
- Validation (code to test data comparisons)

Deepwater Turbine Research

Deep Water Platform Concepts

Spar Buoy

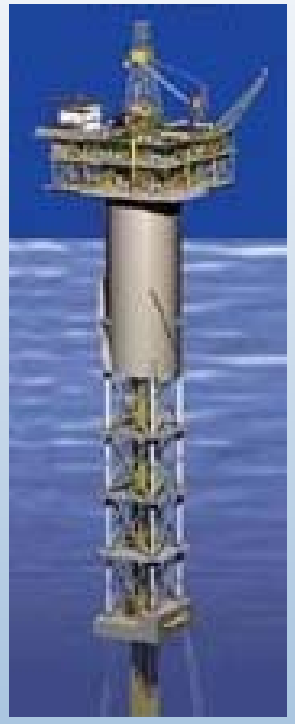

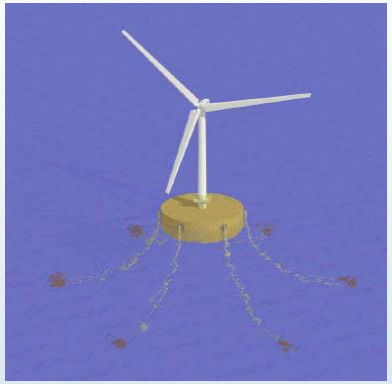

Disk Buoy with Catenary Moorings

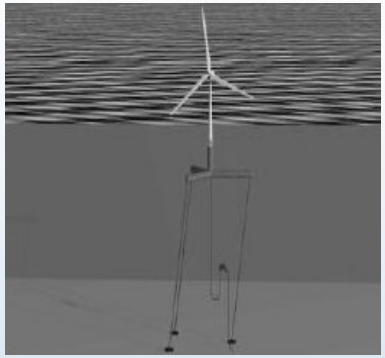

Tension Leg Platform

Tri Floater

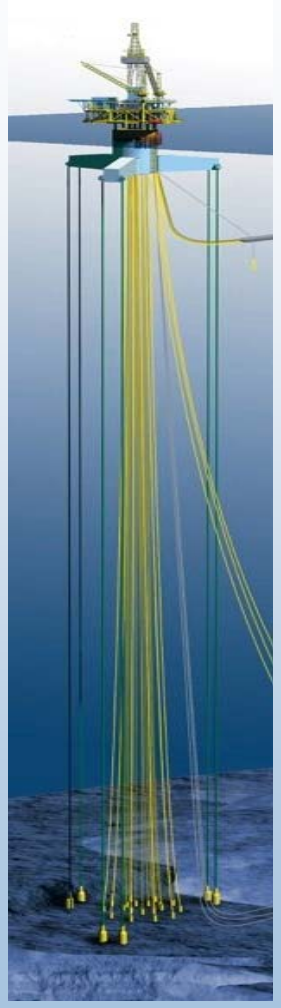

Oil Rig TLP

- A range of technologies are possible
- Each concept offers unique cost advantages & technical challenges
- Turbine dynamic response may overlap wave spectra

Deepwater Offshore Turbine Research

- TLP offers more stable platform but higher cost anchors
- Buoy offers low cost platform & anchor system but less stability
- Accurate design tools are critical
- Design strategy?
- Control strategy?
- Need solid design basis
  - **Validated tools**
  - **Guidelines**
  - **Test data**
  - **Standards**

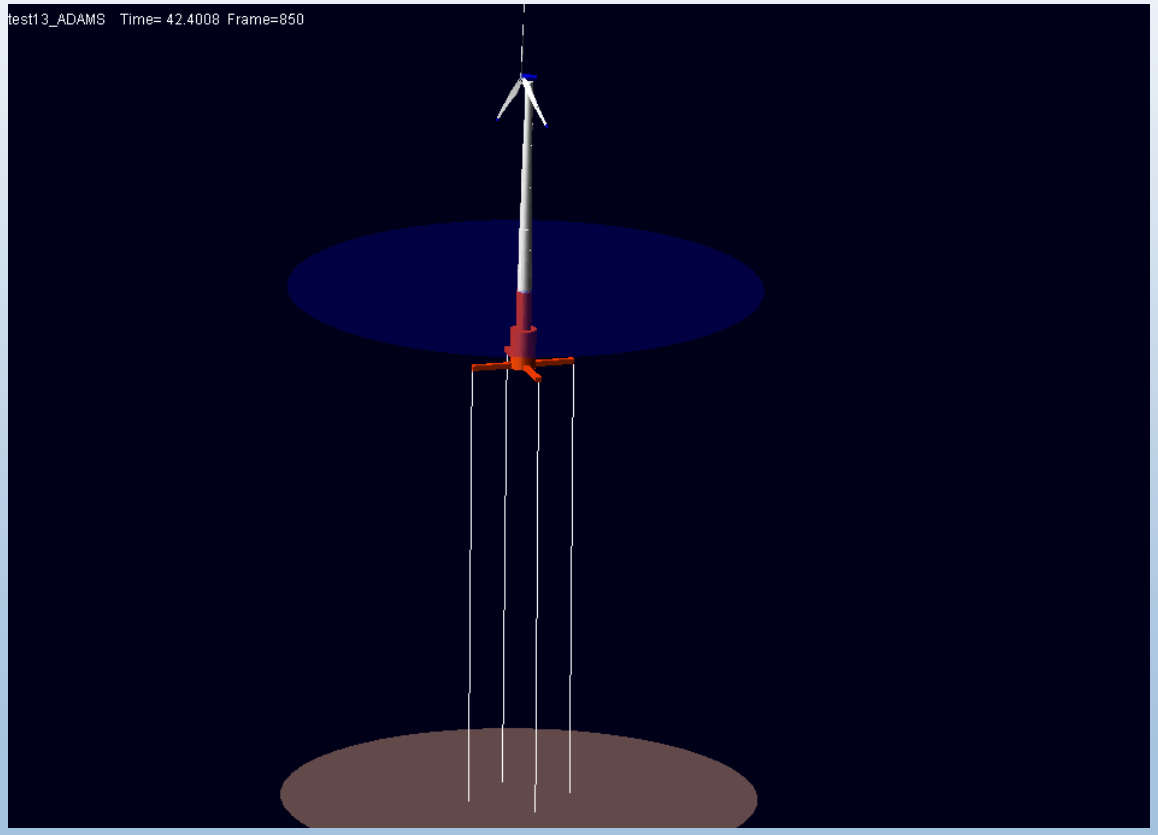

Deepwater Code Improvement Strategy

1) Develop Hydrodynamic/Aeroelastic Code

- Interface FAST and ADAMS with ***Swim-Motion-Lines*** (***SML***) code:
  - determines hydrodynamic properties and responses of floating structures operating in wind, waves, and current in waters of moderate to large depth
  - developed by the Department of Ocean Engineering, Massachusetts Institute of Technology (MIT)

SML Developed for Offshore Platforms

- **Swim** – treatment of linear and second-order frequency-domain hydrodynamics
- **Motion** – solutions of the large-amplitude time-domain slow-drift responses
- **Lines** – determines the nonlinear mooring-line / tether / riser effects upon the platform

2) Include Blade Coupling

- Advanced blades will be more flexible, lighter & include twist/flap structural coupling for load relief
- Coupling has been ignored in wind turbines but caused instabilities helicopter blades
- Coupling is not modeled in most aeroelastic codes
  - structural coupling
  - Inertial coupling
  - Aerodynamic coupling
  - Stability
- Modeling critical for LWST

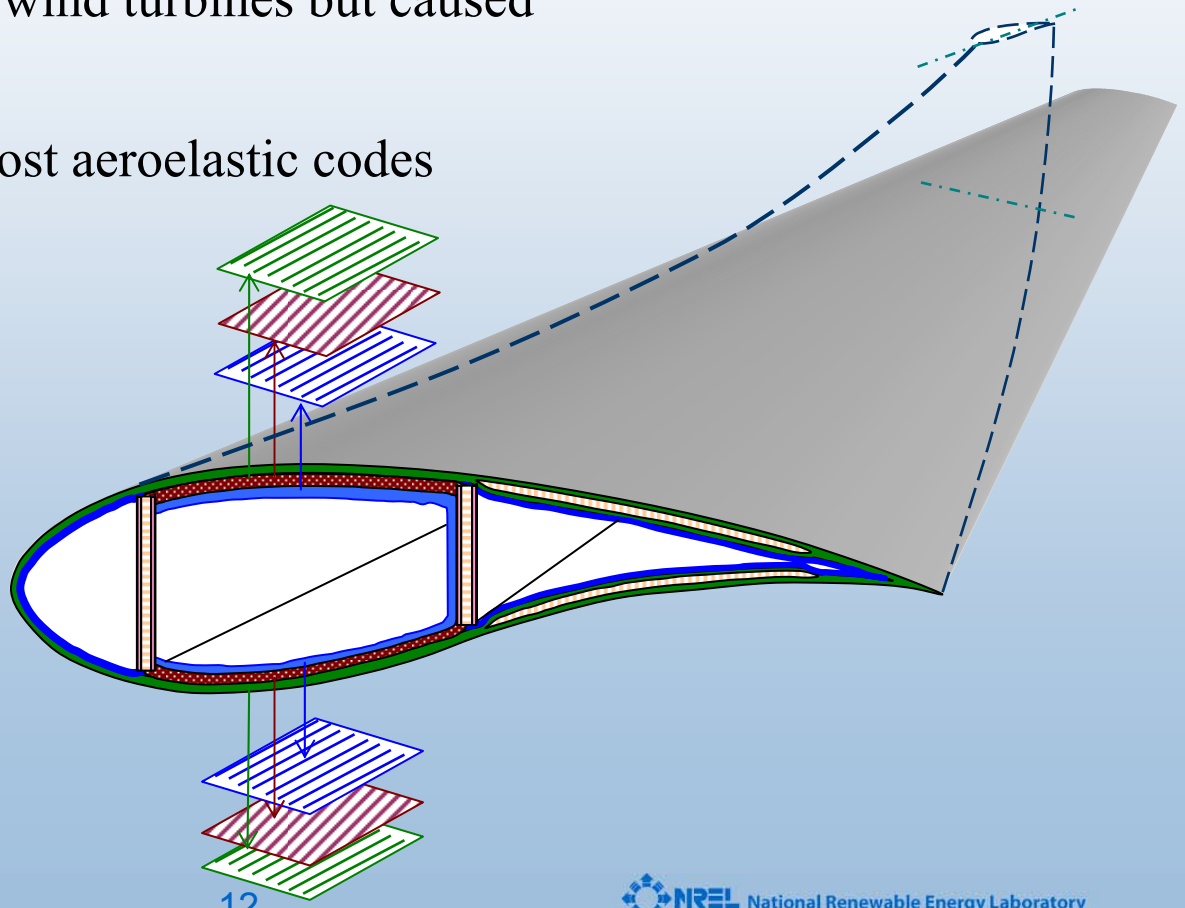

Coupled Blade Modeling Strategy

- Upgrade ***PreComp*** to handle composites anisotropy and generate inertia and cross-coupled section stiffness properties along the blade. (in beta testing)
- Develop capability (***BModes***) for generating coupled modes. (in beta testing)
- Extend ***FAST*** formulation to include coupled flap-lag-twist EoM. (Equations complete, need FAST integration)

Modeling Flow

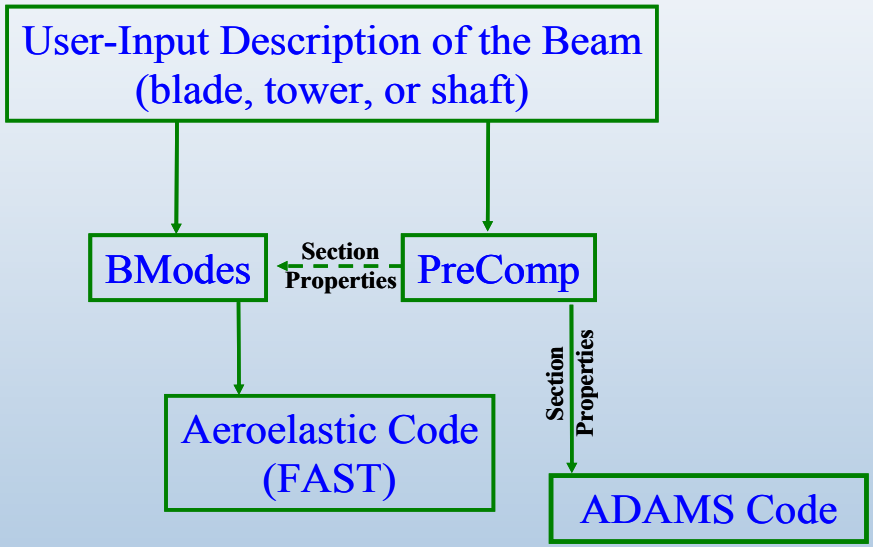

3) Use These Tools for Deepwater R&D

- Platform optimization
- Control strategy development
- Stability analysis
- Developing design methodologies
- Support subcontractors in low cost deepwater design developments

Deepwater R&D - Modeling Benefits

- Designers will have a complete set of design tools suitable for advanced, low cost onshore turbines
- Designers will have critical hydrodynamic/aeroelastic stability analysis tools uniquely suited for deepwater wind turbines
- NREL/DOE will be able to support low cost deepwater subcontracted R&D
- Most critical first step in developing a design basis will be complete