Distributed Generation Interconnection Collaborative (DGIC)

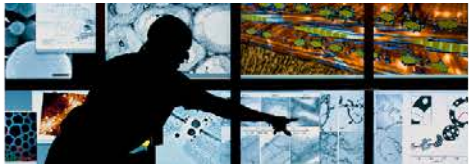

"Mitigation Measures for Distributed Interconnection"

Michael Coddington with National Renewable Energy Laboratory and Robert Broderick with Sandia National Laboratories

July 9, 2014

NREL is a national laboratory of the U.S. Department of Energy, Office of Energy Efficiency and Renewable Energy, operated by the Alliance for Sustainable Energy, LLC.

Speakers

Michael Coddington
Principal Investigator
Distributed Grid Integration
NREL

Robert Broderick
Technical Lead
Distributed Grid Integration Programs
Sandia National Laboratories

Kristen Ardani
Solar Analyst,
(today's moderator)
NREL

Interconnection, Screening & Mitigation Practices of 21 Utilities

Michael Coddington
Principle Investigator, Distributed Grid Integration

Development of Alternative Screening Methods

GO solar CALIFORNIA

EPRI ELECTRIC POWER RESEARCH INSTITUTE

NREL NATIONAL RENEWABLE ENERGY LABORATORY

Sandia National Laboratories

PG&E Pacific Gas and Electric Company®

SDGE A Sempra Energy utility™

SOUTHERN CALIFORNIA EDISON An EDISON INTERNATIONAL Company San Onofre Nuclear Generating Station

Itron CSI RD&D Program Manager

SunShot U.S. Department of Energy

Step 1: Current Screening Practices

Energy Systems Integration

- Task Purpose
  - > Investigate and document current practices for screening PV interconnection requests among California utilities and from other sources outside California
- Approach
  - > Consider federal, state, and local interconnection procedures pertaining to CA (Rule 21, WDAT, SGIP)
  - > Consider non-CA utility screening practices as well

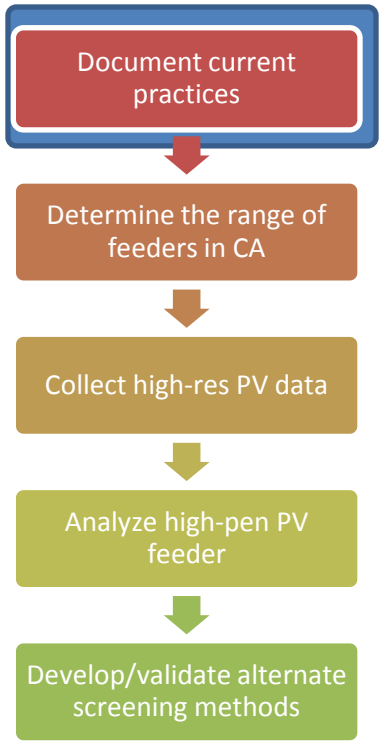

Documenting Current Practices

Energy Systems Integration

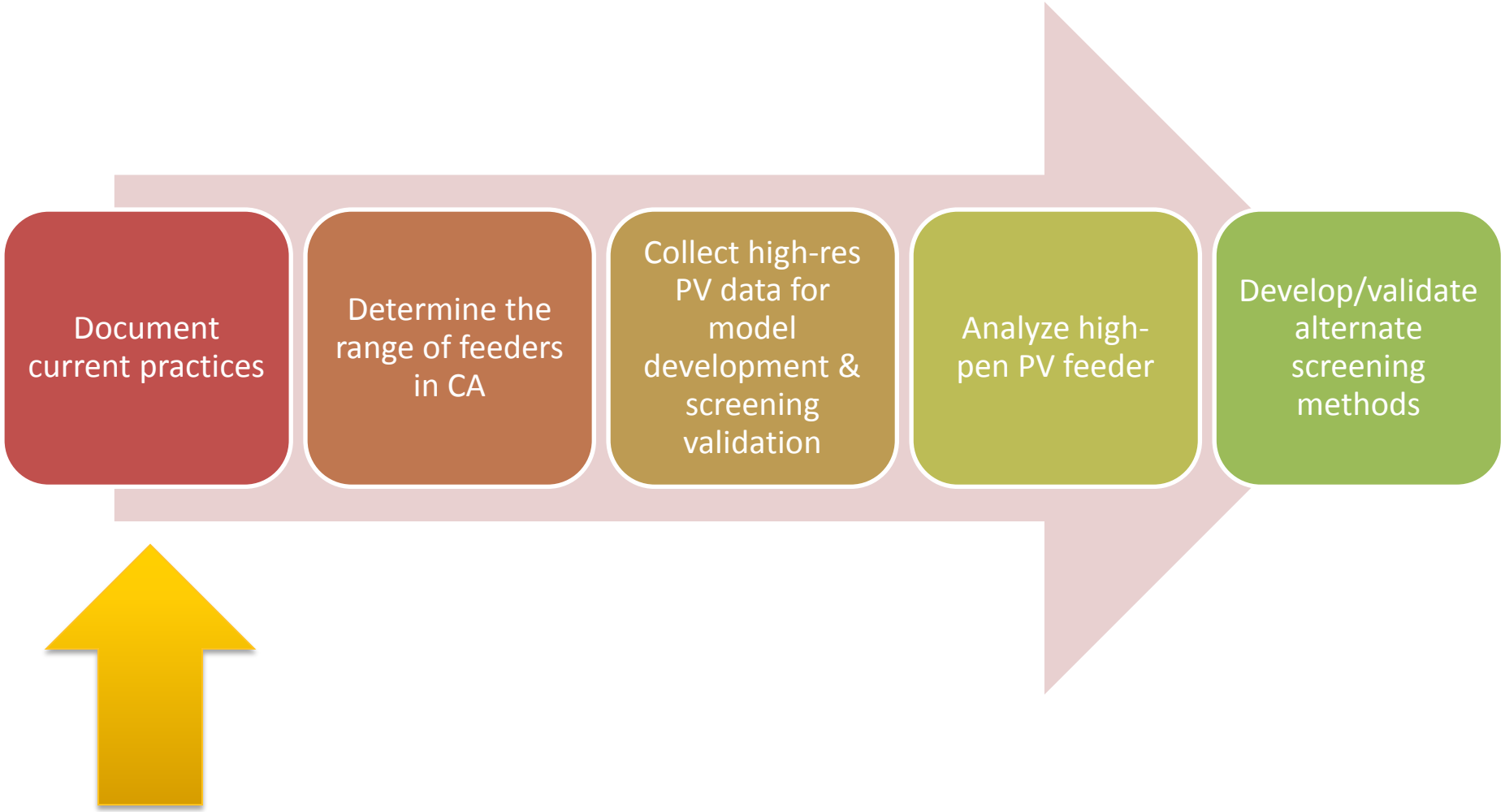

21 Utilities, Four Regions

Energy Systems Integration

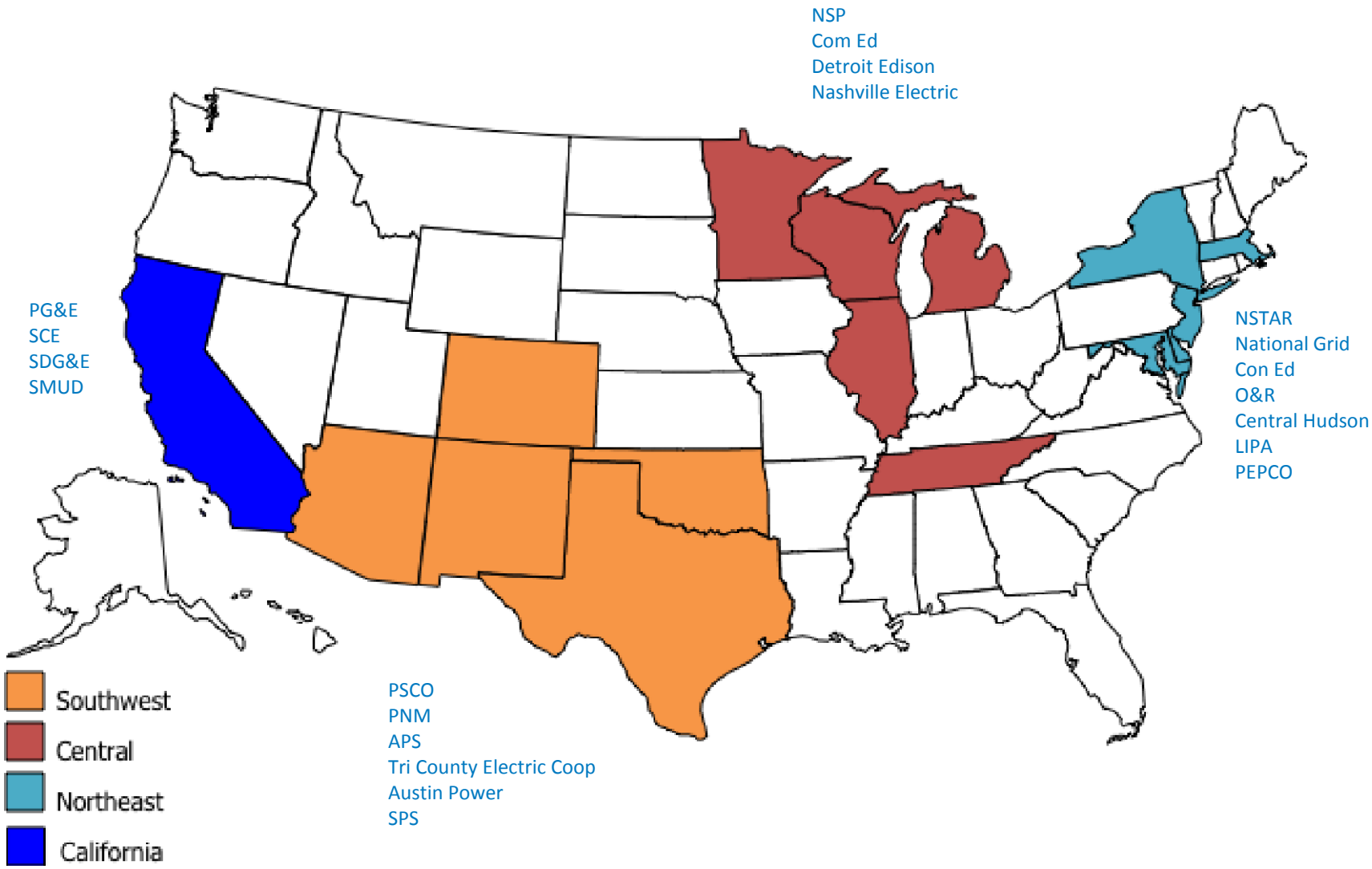

Simplified Process Flow

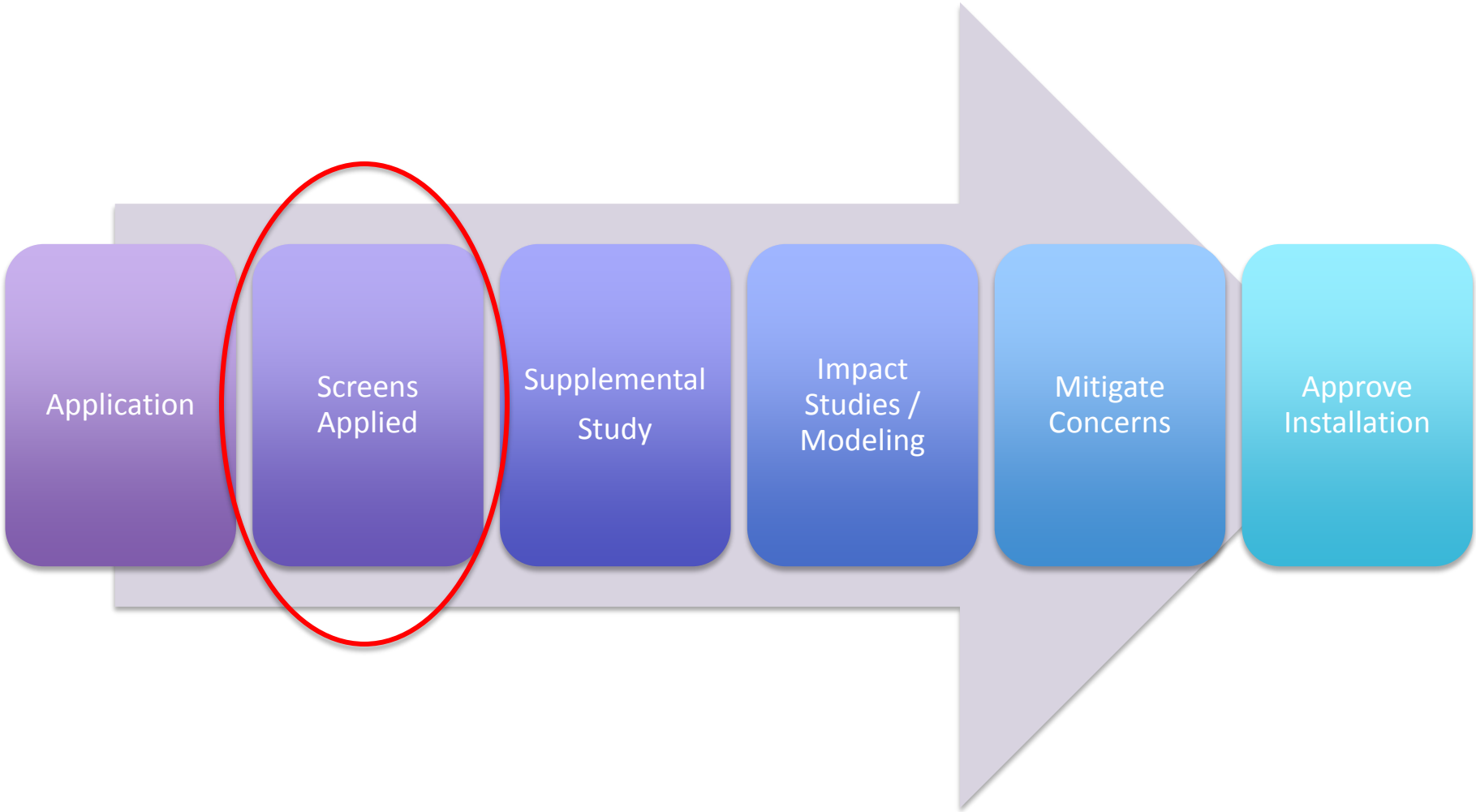

Questionnaire Areas of Focus

Energy Systems Integration

- Application Process
- Screening procedures
- Supplemental screening procedures
- Utility concerns related to interconnection
- Impact study approach & software used
- Mitigation strategies

Application Processes

Energy Systems Integration

- Most have time limits to respond to applications
- Many utilities followed state rules for applications
- Many utilities have multiple tiers
- Many utilities have inverter-based DG applications
- Many interconnection applications are posted online
- Some utilities allowed online submittal, tracking
- Some utilities are not allowed to charge a fee for certain applications

Screening Procedures

Energy Systems Integration

- **Most utilities follow a version of FERC screens**
- **Some used a minimum daytime load for penetration screen (prior to FERC SGIP 2013 order)**
- **One utility didn't use any screens at all**

1. Aggregated DG <15% of peak load on line section
2. For connection to a spot network: DG is inverter-based, aggregated DG capacity is <5% of peak load & <50 kW
3. Aggregated DG contribution to maximum short circuit current is <10%
4. Aggregated DG does not cause protective device to exceed 87.5% of short circuit interrupting capability
5. DG interface is compatible with type of primary distribution line (wye/Delta)
6. For a single-phase shared secondary, Aggregated DG capacity <20kW
7. Resulting imbalance <20% of service transformer rating of 240 V service
8. Aggregated transmission connected DG capacity <10 MW for stability-limited area
9. Construction not required for interconnection

Universal Interconnection Process

Energy Systems Integration

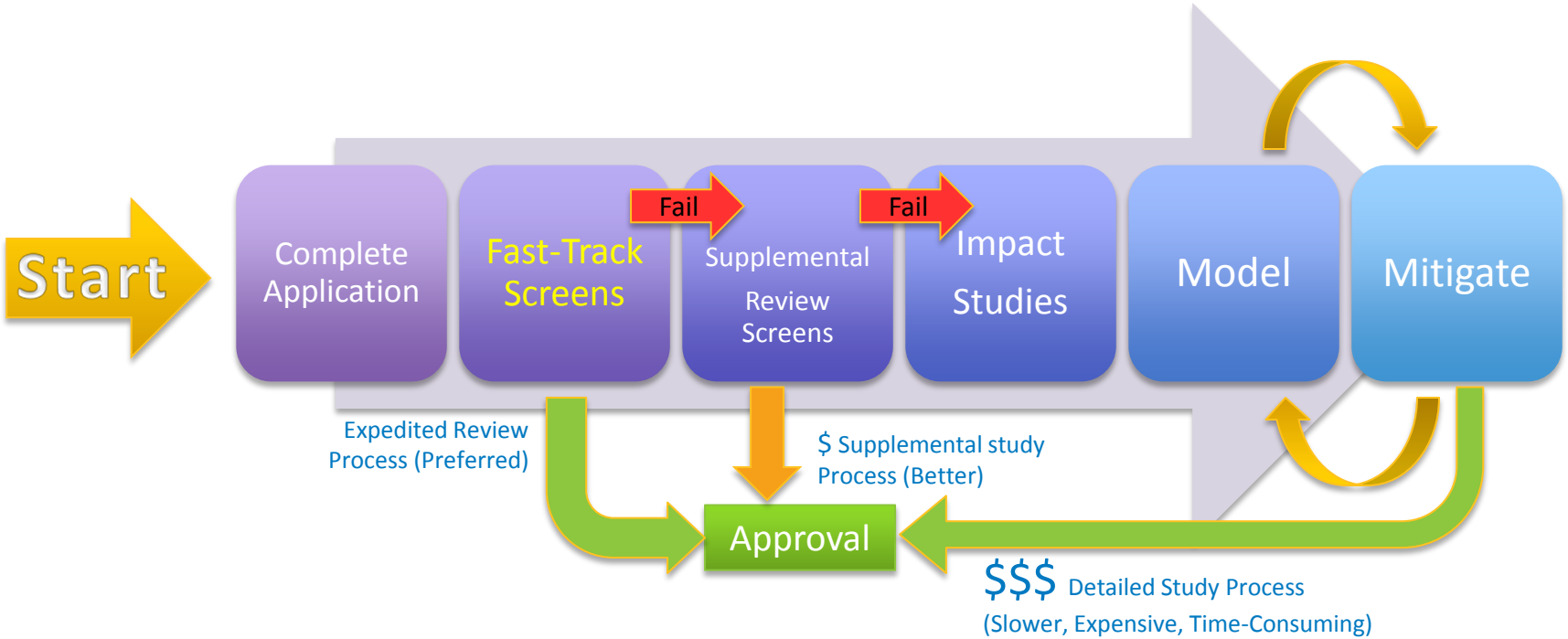

There are significant differences amongst U.S. Electric utilities in practices, processes, tools & models and mitigation strategies.

Supplemental Screening

Energy Systems Integration

- Used to pass some interconnection applications when fast-track screens are failed
- Often quick, inexpensive solutions rather than moving to detailed impact studies
- Implemented only by some utilities
- Now part of the FERC SGIP

Major Utility Concerns

Energy Systems Integration

- Voltage Regulation 16
- Protection system coordination 10
- Reverse power flow 11
- Increased duty of line regulation equipment 8
- Unintentional islanding 8
- Secondary network protection 6
- Variability due to clouds 5
- Increased switching of capacitors 4

Minor Utility Concerns

Energy Systems Integration

- Flicker 4
- Reactive power control 3
- Balancing resources and demand response 3
- Overvoltage due to faults 2
- Multiple inverter stability 1
- Harmonics 1
- Relay desensitization 1
- Exporting power through network protectors 1

Detailed Impact Studies

Energy Systems Integration

Most utilities employ one or more of the following study types

- Feasibility
- Facility
- Power Flow (common)
- Short Circuit (common)
- Voltage (common)
- Quasi-Static Time Series
- Flicker
- Power Quality
- Dynamic/Transient Stability
- Electromagnetic Transient

Common software

- SynerGEE
- CymDist
- Milsoft Windmil
- DEW
- ASPEN
- OpenDSS

Common Mitigation Strategies

Energy Systems Integration

Type	SW (5)	Central (3)	California (4)	NE (7)
Voltage Regulation devices (13)	4	1	3	5
Upgraded line sections (16)	4	2	4	6
Modify protection (16)	4	3	3	6
Power factor controls (8)	4	1	x	3
Direct Transfer Trip (12)	2	3	1	6
Static VAR Compensator (SVC) (1)	1	x	x	x
Communication/Control Technology (11)	4	1	2	4
Grounding transformers (8)	2	2	2	2
Advanced inverters (11)	3	2	3	3
Capacitor control modifications (1)	x	x	x	1
Reclosers (3)	x	1	x	2
Volt/VAR Controls (1)	x	x	x	1

Common Amongst Experienced Utilities

Energy Systems Integration

- Open communication between utility & developer
- Online interconnection applications
- Ease of tracking project status
- Rational screening approach
- Supplemental screening options
- "Safety Valve" approach to solve simple problems and avoid impact studies
- Standard impact study approach, software
- Cost-effective mitigation strategies
- Supportive regulatory organizations
- Uniform state rules/processes for all utilities
- Overall streamlined, transparent processes

Thank You

Exceptional service in the national interest

Sandia National Laboratories

SunShot
U.S. Department of Energy

Analysis of 100 Utility SGIP PV Interconnection Studies

Santiago S. Sena, Jimmy E. Quiroz, and Robert J. Broderick

U.S. DEPARTMENT OF ENERGY

NNSA National Nuclear Security Administration

Sandia National Laboratories is a multi-program laboratory managed and operated by Sandia Corporation, a wholly owned subsidiary of Lockheed Martin Corporation, for the U.S. Department of Energy's National Nuclear Security Administration under contract DE-AC04-94AL85000. SAND NO. 2011-XXXXP

Introduction

- Small Generator Interconnection Procedure (SGIP) was developed by FERC as a standard interconnection procedure.
- Applies to generating facilities ≤ 20 MWs on distribution systems.
- Three evaluation procedures:
  - 10 kW Inverter Process
  - Fast Track process
  - Study Process
- SNL surveyed 100 PV SGIP studies to:
  - Classify interconnection types and facility costs
  - Analyze the types of adverse system impacts
  - Analyze mitigation options and associated costs

100 SGIP Cases Dataset

- PV facility sizes ranged from 1 MW to 20 MW.
- Facilities entered study process by failing Fast Track screens:
  - Capacity must be less than 15% of the peak load on the line section
  - Contribution to fault current shall not exceed 10% of circuit's max fault current
  - Must not cause equipment to exceed 87.5% of short circuit interruption capability
  - Capacity must not exceed 10 MW if interconnecting to an area with known transient stability limitations
  - No construction of facilities by the Transmission Provider on its own system shall be required to accommodate the small generation facility
- Studies performed by 7 utilities in U.S.

Interconnection Topologies – Tap Existing Low Voltage Distribution Circuit

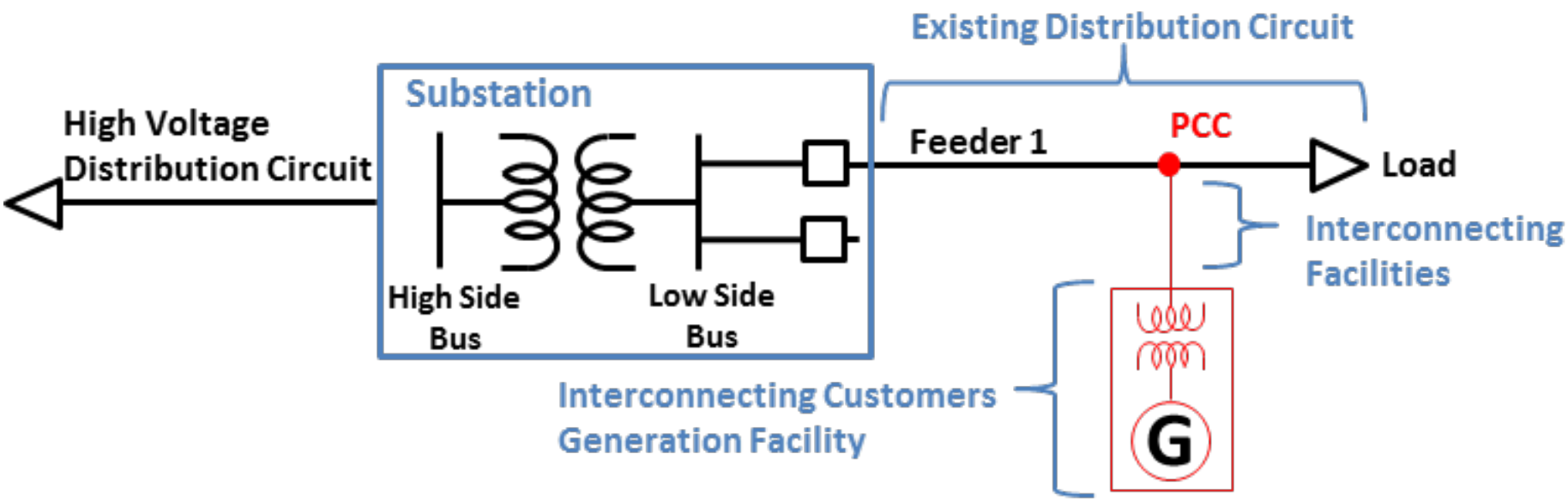

Ranged from 12.47 to 34.5 kV.

Interconnection Topologies – Build New Distribution Circuit from Substation

Single Feeder Service

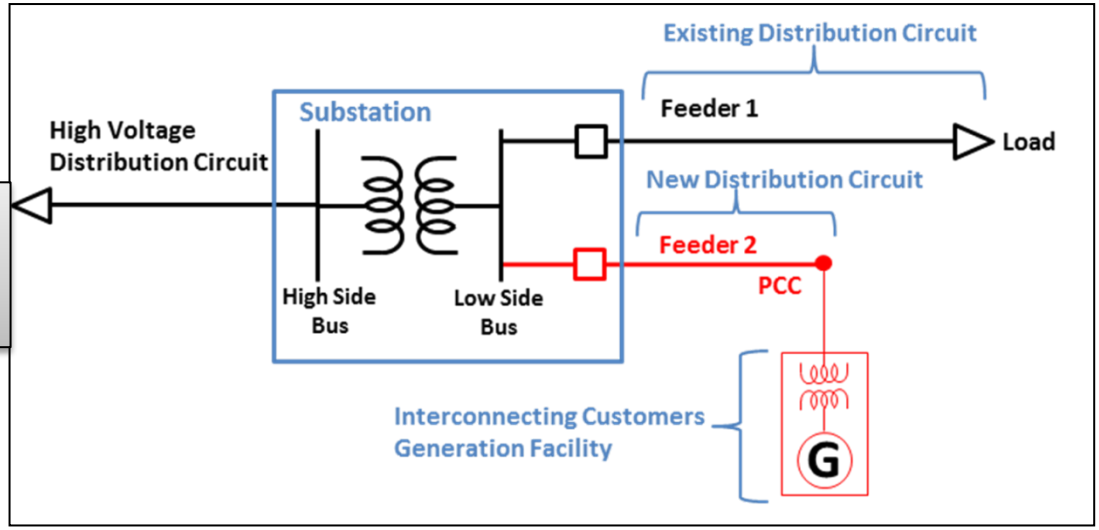

Double Feeder Service

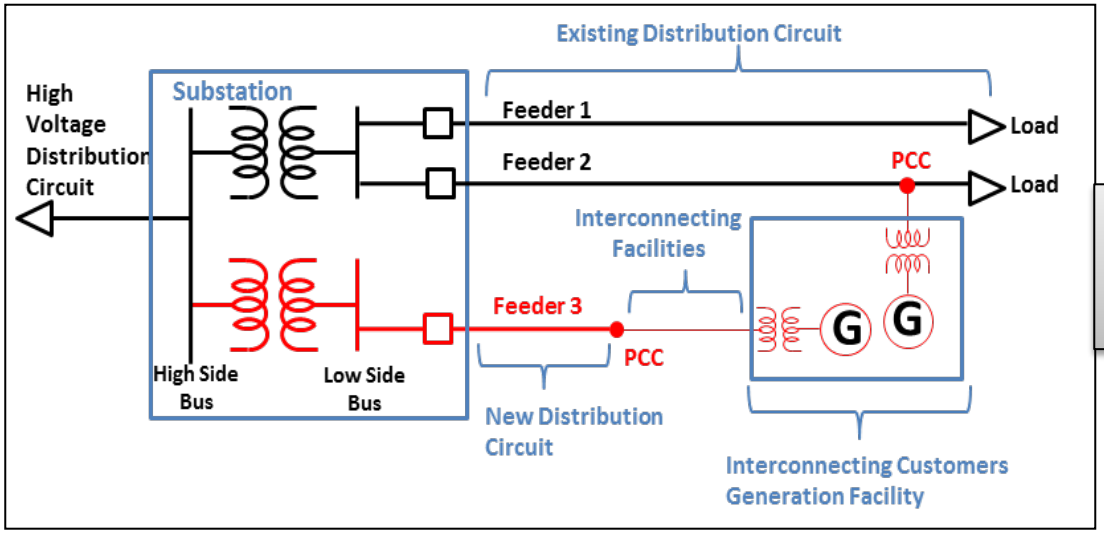

Interconnection Topologies – Tap Existing High Voltage Distribution Circuit

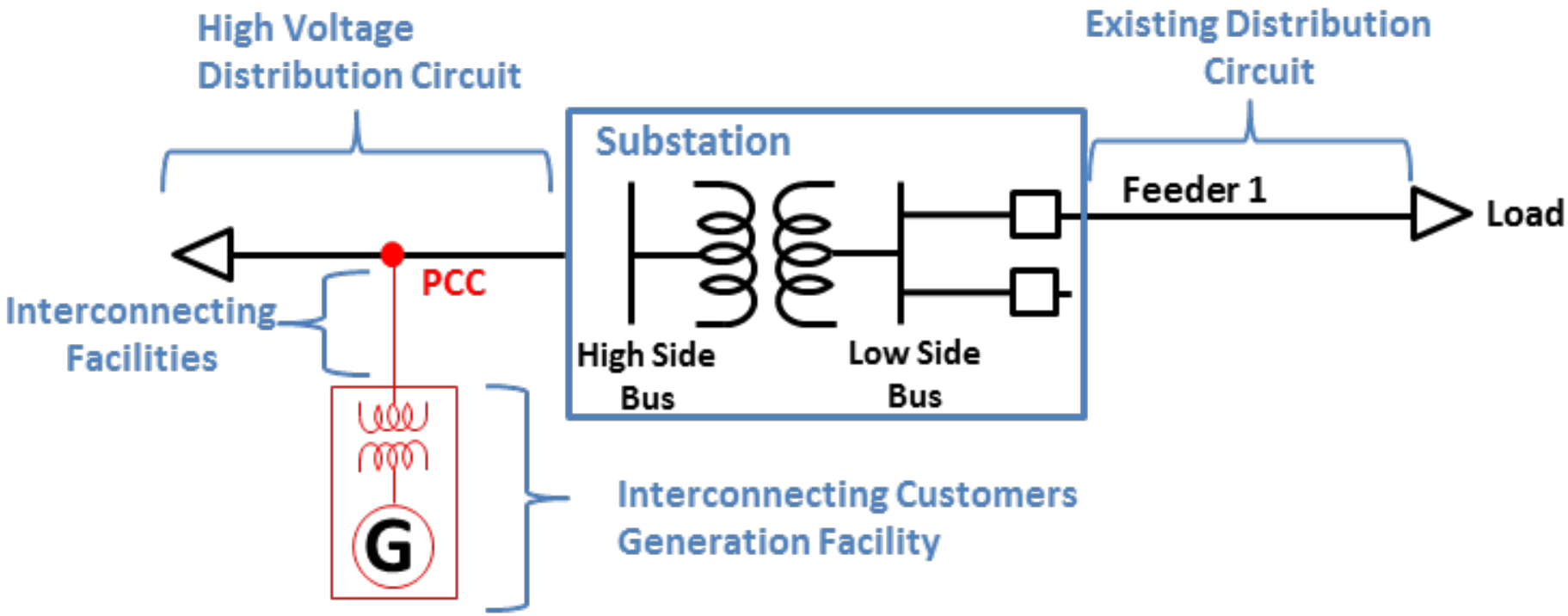

69 kV or less.

General Statistics – Facility Sizes and Utility

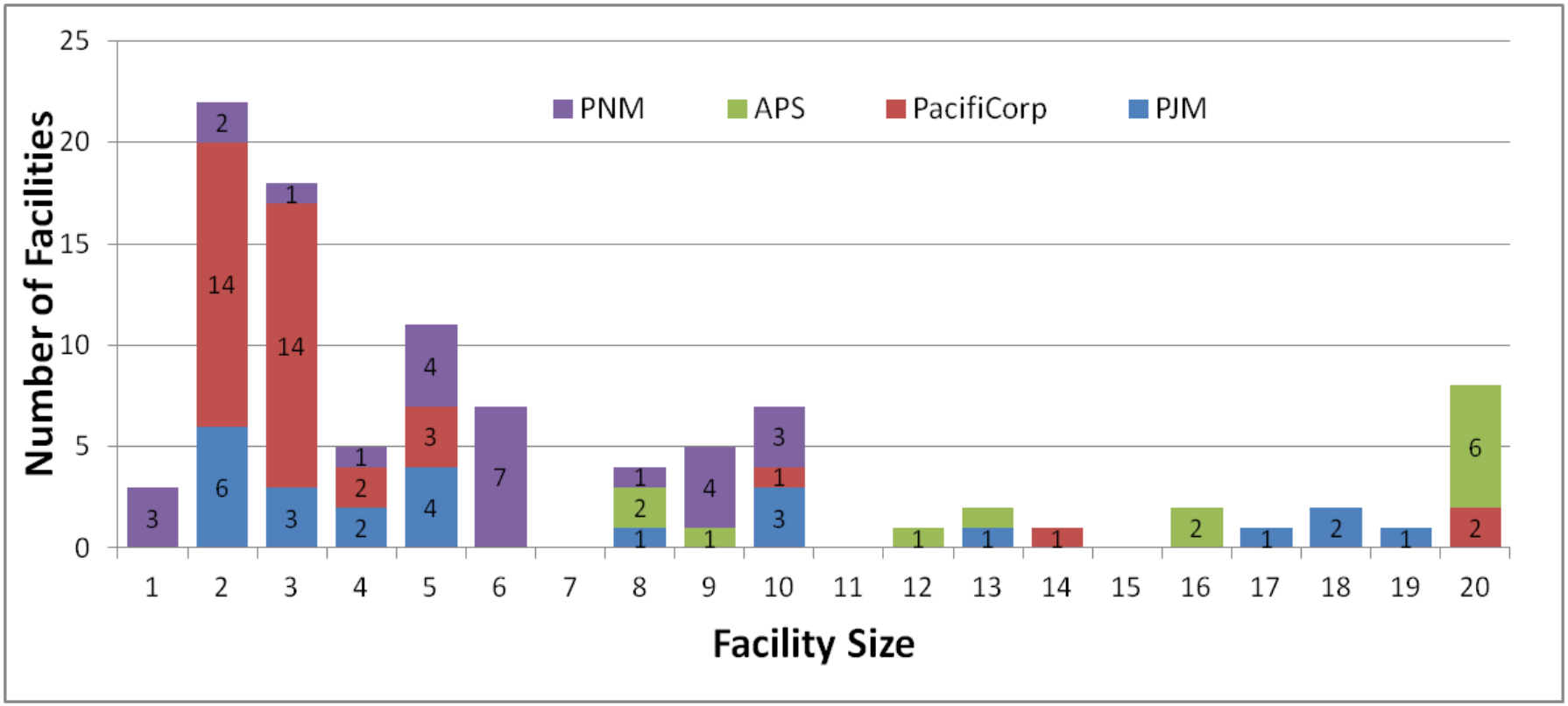

66% less than 7 MW, 82% less than 11 MW.

General Statistics – Interconnection Voltage

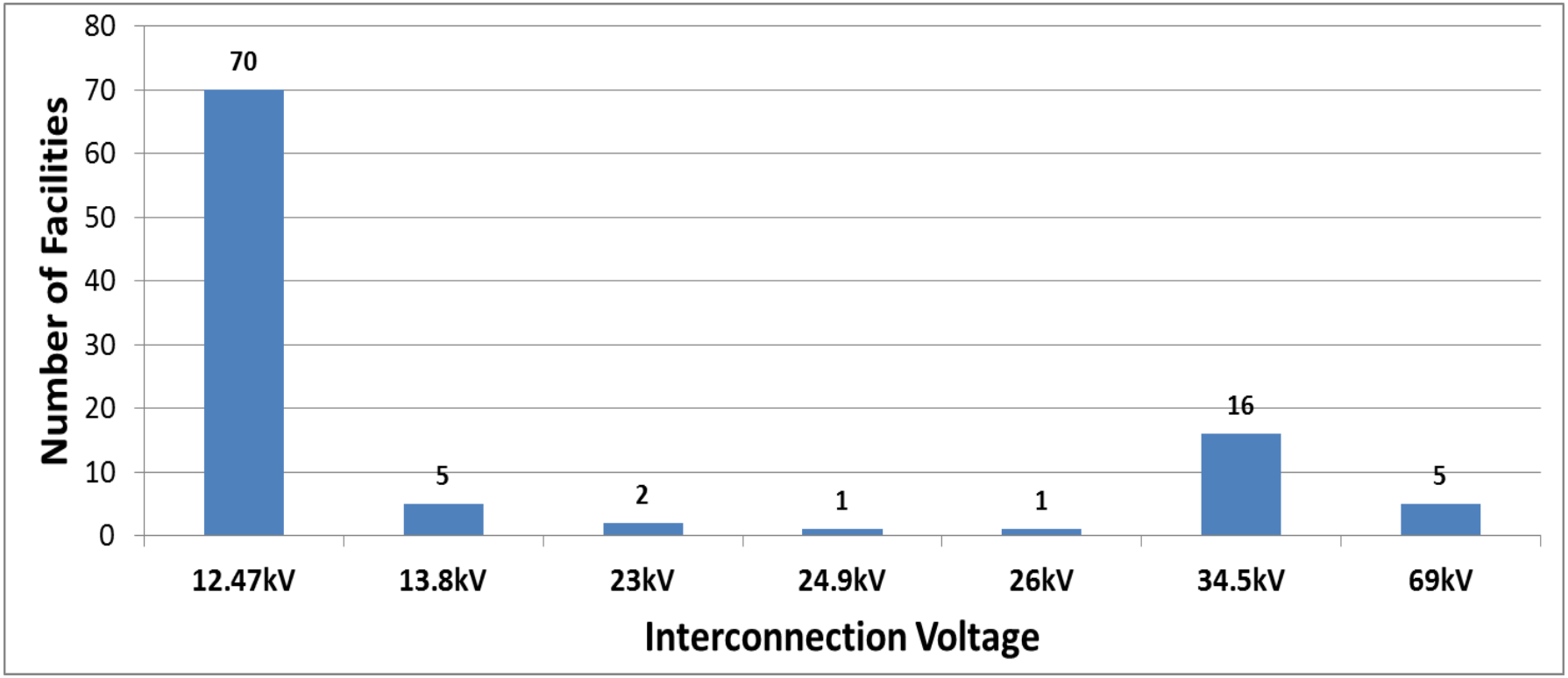

70% at 12.47 kV, all 69 kV facilities were 20 MW capacity.

General Statistics – Facility Sizes and Interconnection Topology

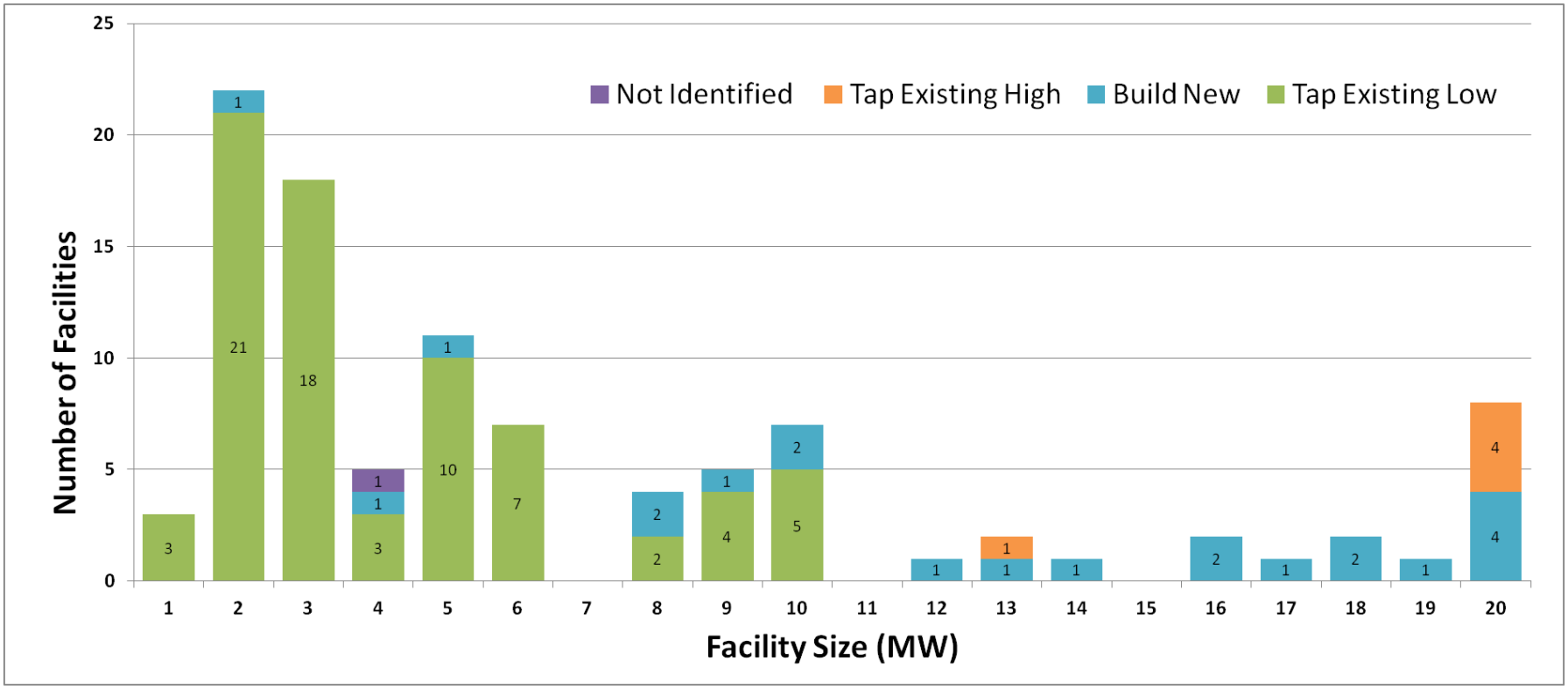

All “Tap Existing Low” were 10 MW or less, 80% of “Tap Existing High” were 20 MW.

Impacts Identified – Interconnection Topology

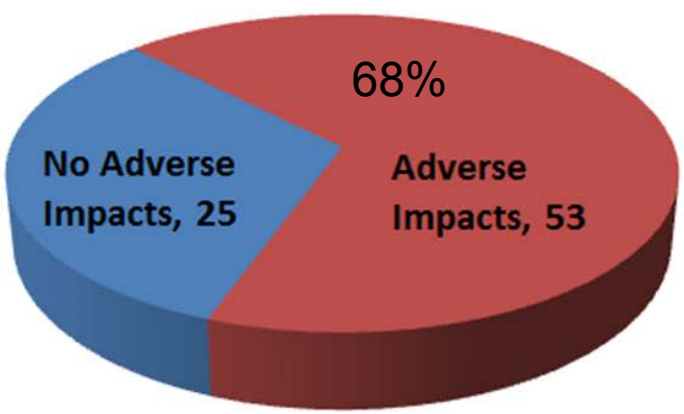

A) Tap existing distribution circuit

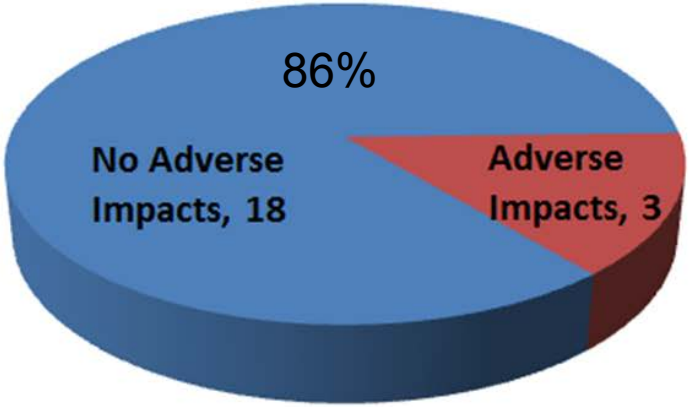

B) Build new distribution circuit

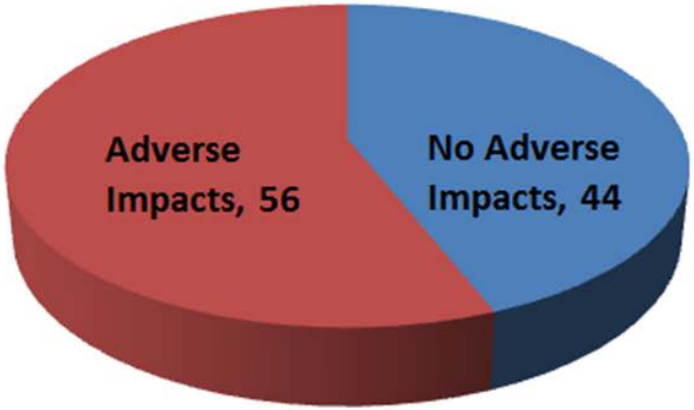

C) Identified Impacts for all SGIP Studies.

Impacts Identified – Impact Type

Protection impacts most prevalent (43).

29 voltage impacts – 19 overvoltage and 10 voltage deviation.

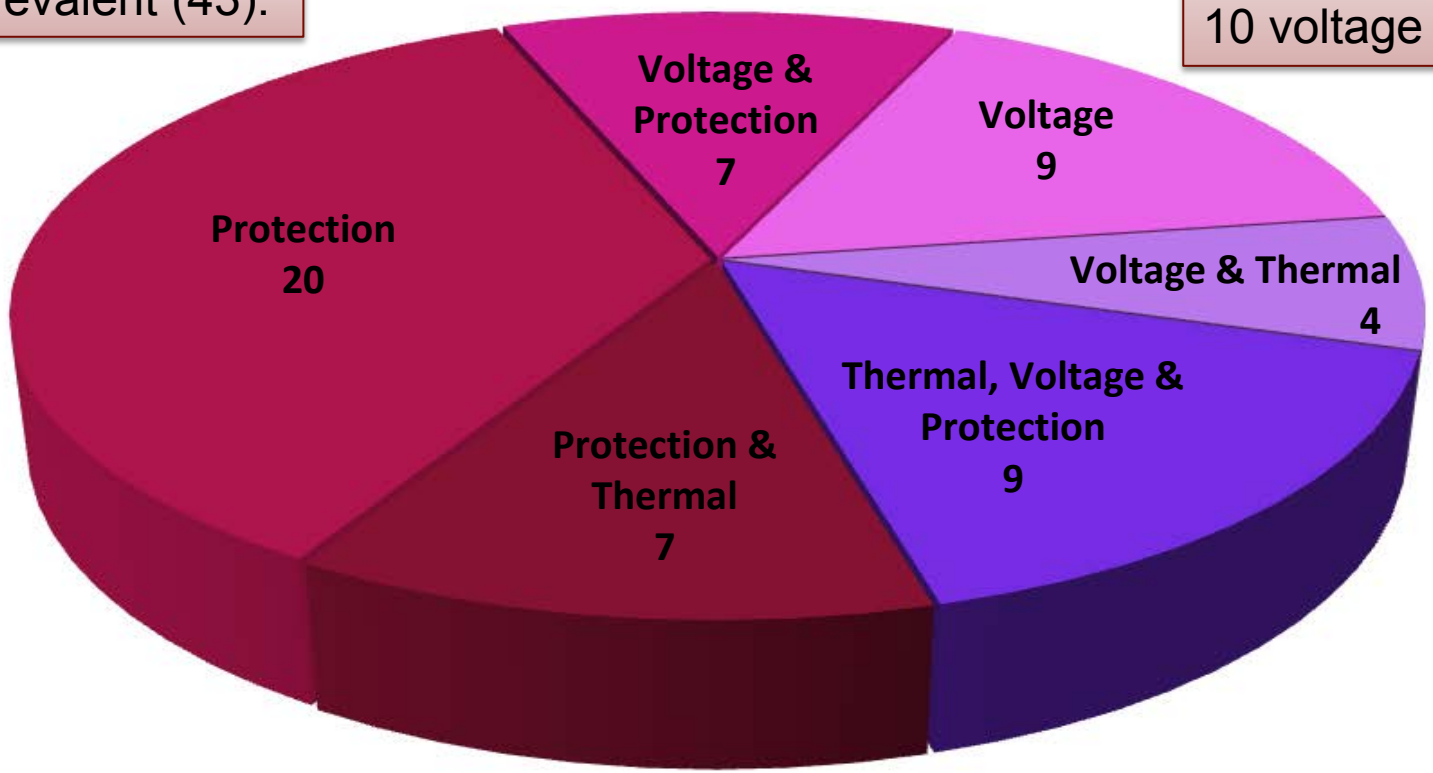

All thermal impacts occurred in conjunction with another impact type.

Mitigations and Costs – Overvoltage

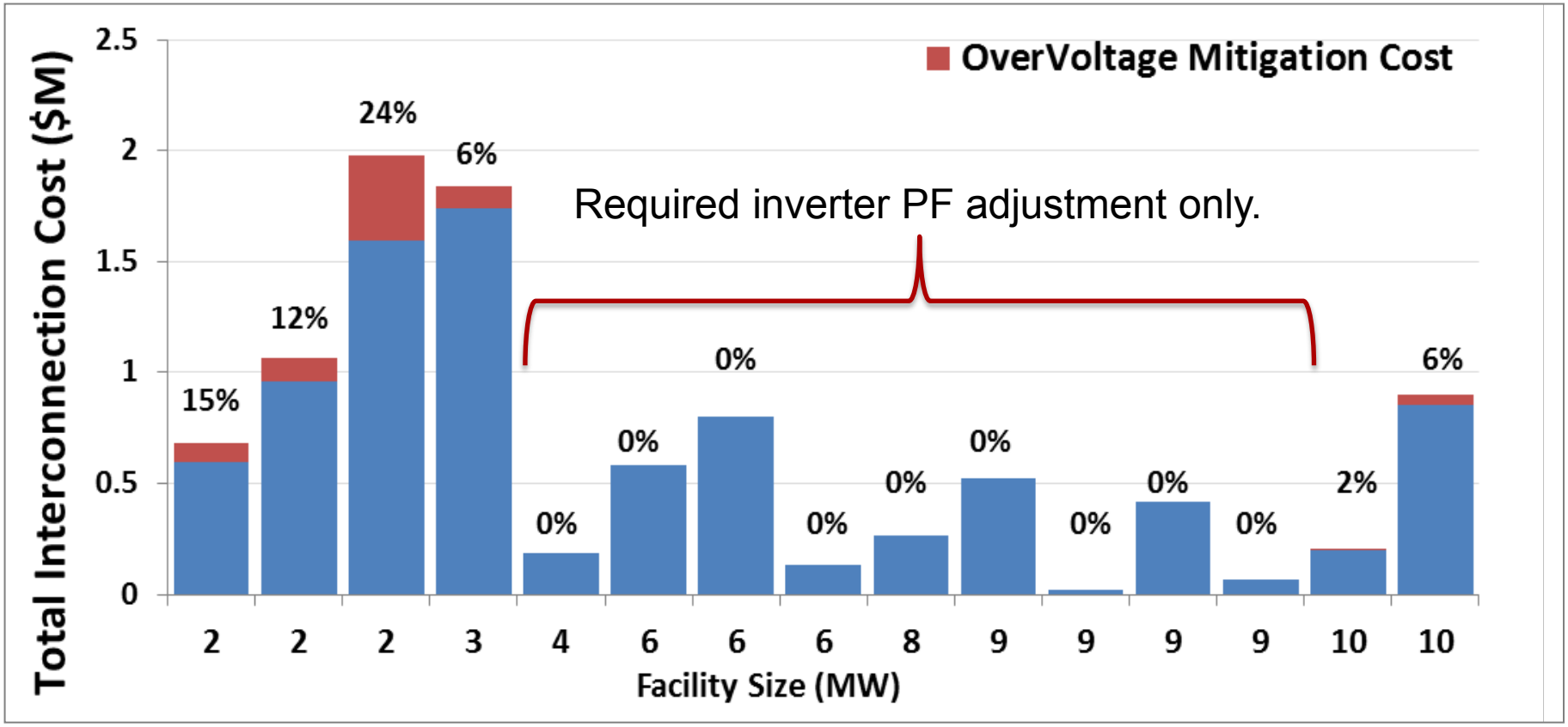

Ranged from $0 to $383,700.

Mitigations and Costs – Voltage Deviation

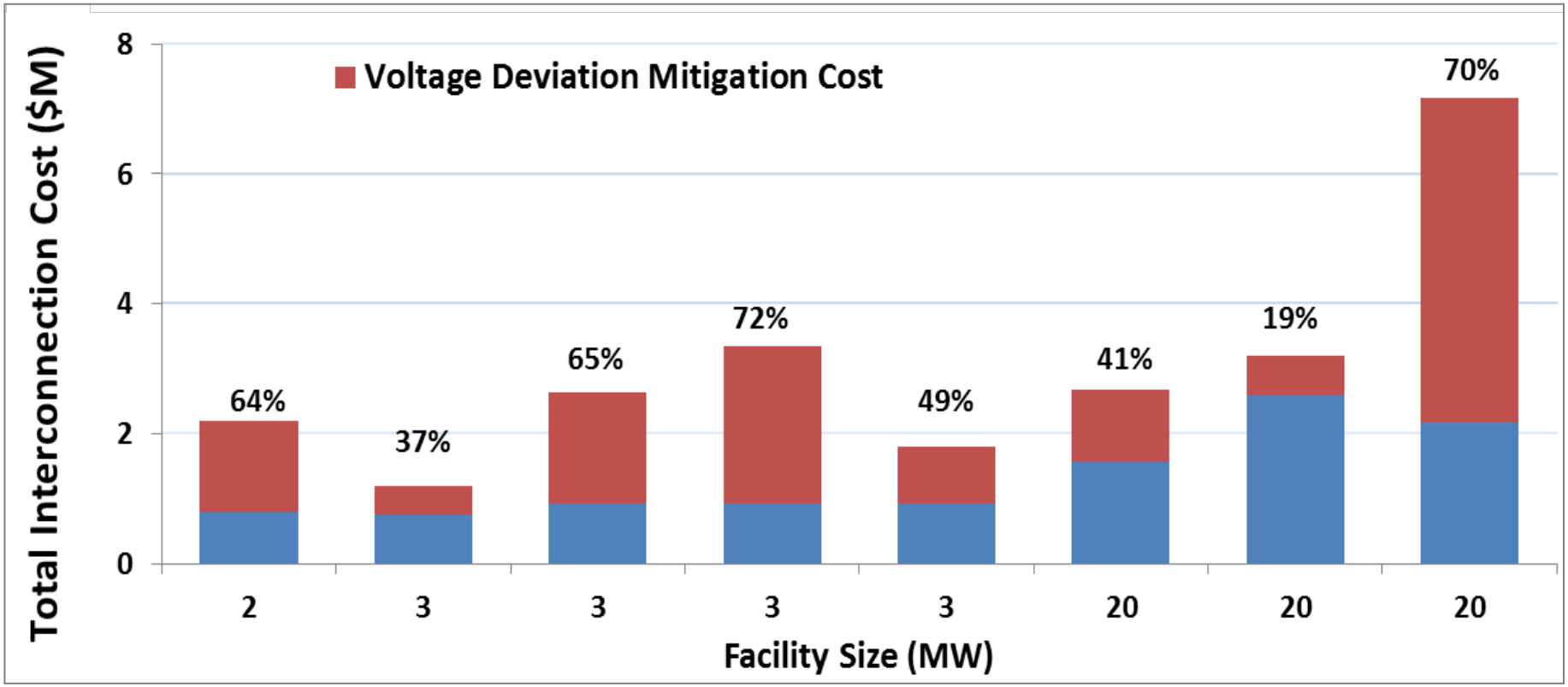

Ranged from $434,800 to $5,000,000. Included new VREG equipment, modifying existing VREG locations, conductor upgrades, and static VAr compensator.

Mitigations and Costs – Thermal Impacts

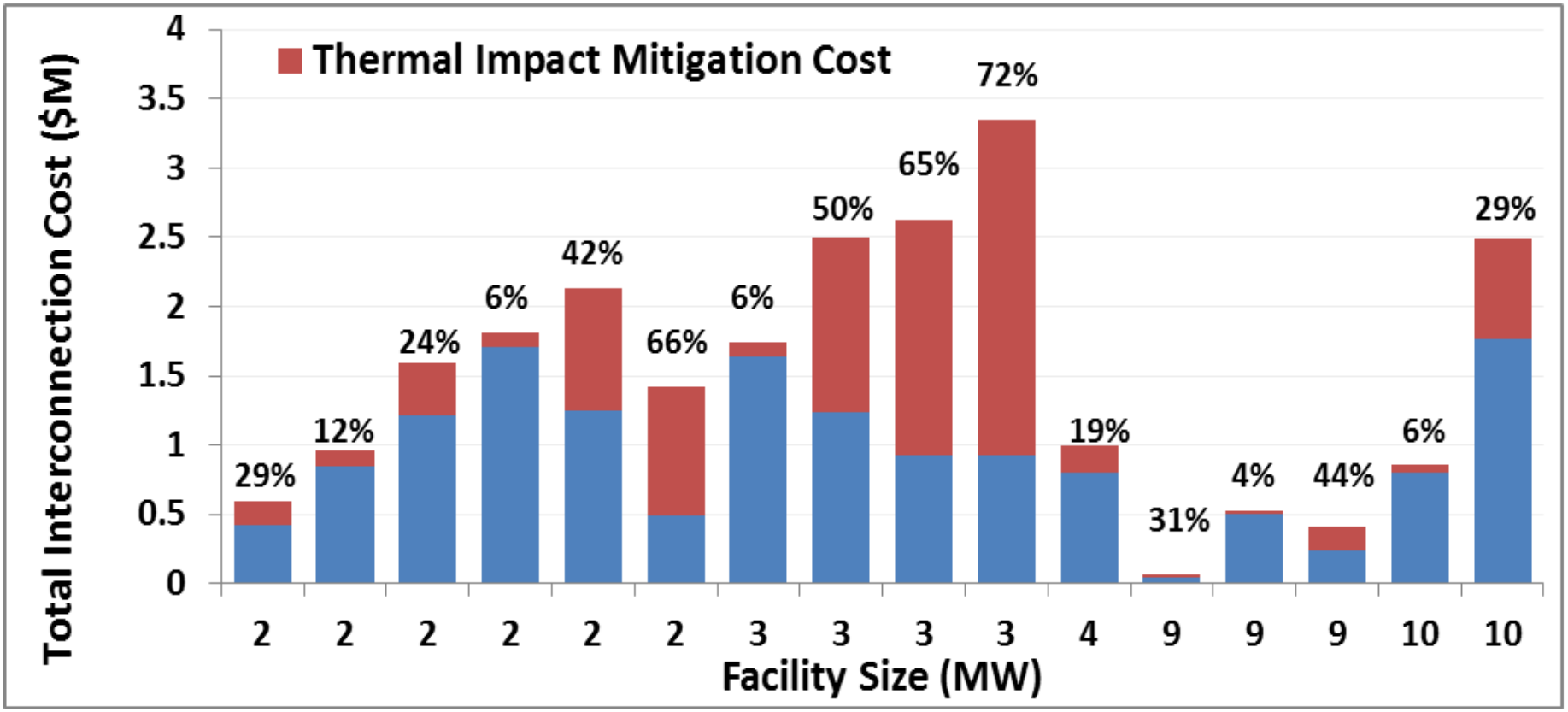

Ranged from $20,000 to $2,415,100. Included upgrades to conductor sections and voltage regulation equipment.

Mitigations and Costs – Protection Substation Relay Modifications

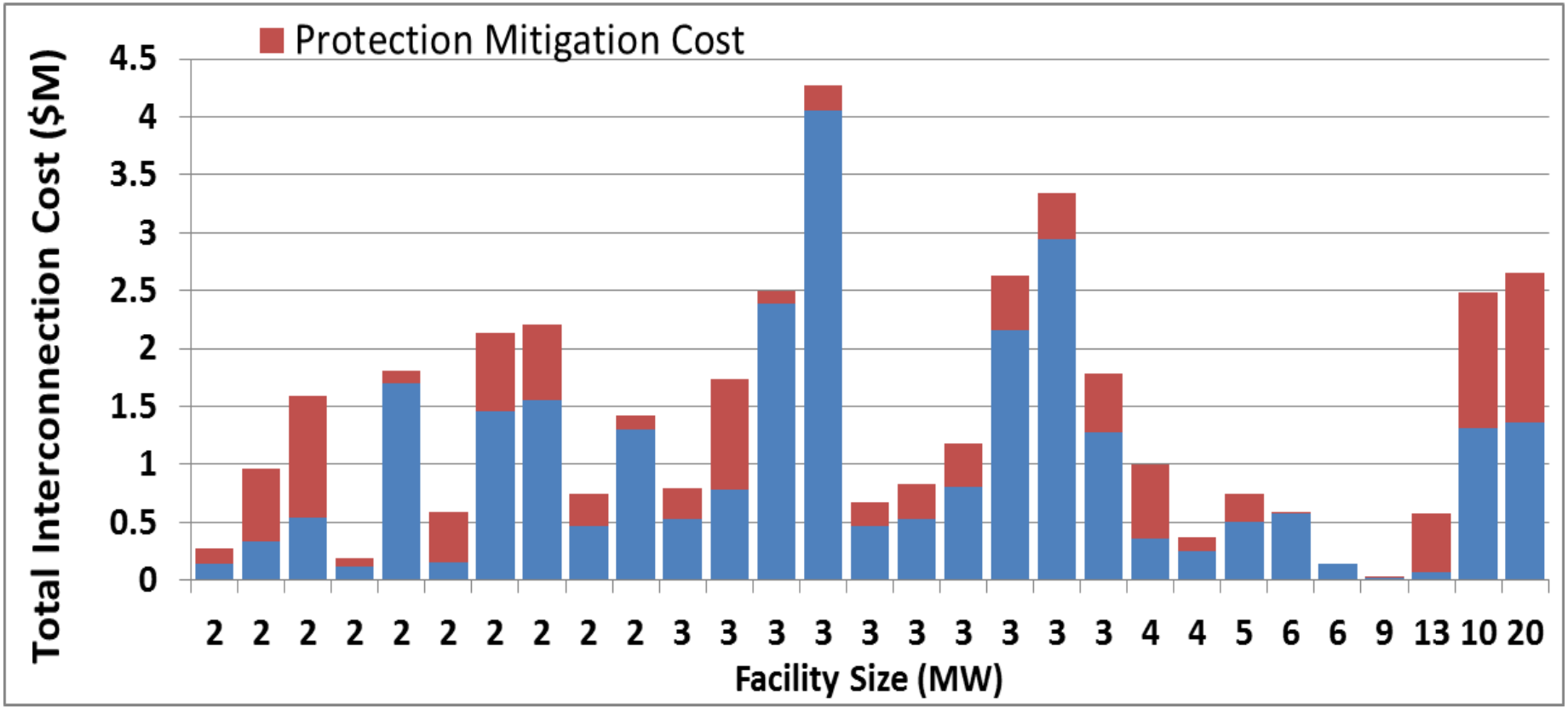

Ranged from $2,000 to $1,300,000 (1% to 88% of total cost). Included adjusting relay settings, implementing advanced relay functions (deadline checking and transfer trip), and installing protective relaying.

Mitigations and Costs – Protection Distribution Protection Modifications

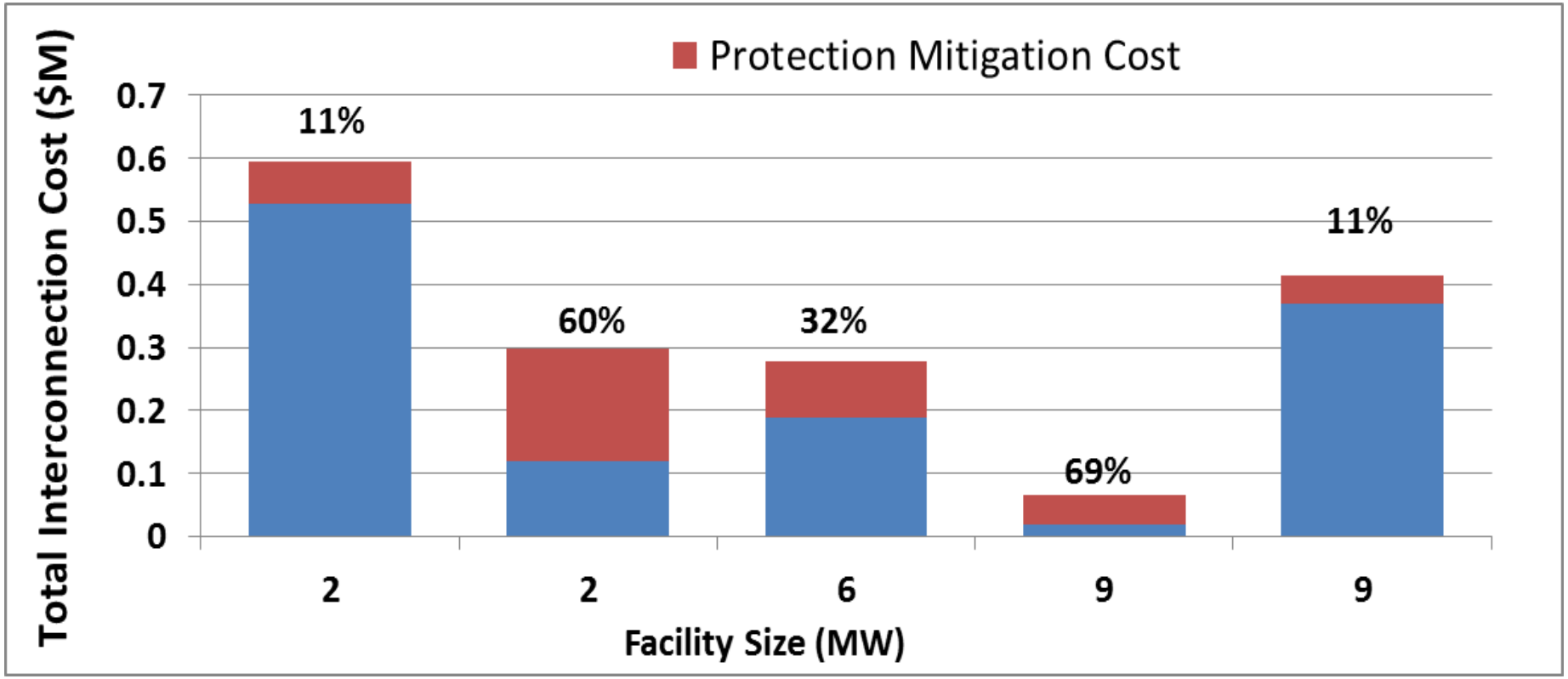

Ranged from $45,000 to $178,900 (11% to 69% of total cost). Included modifications to existing reclosers and installation of new reclosers.

Cost Analysis – Facility Size

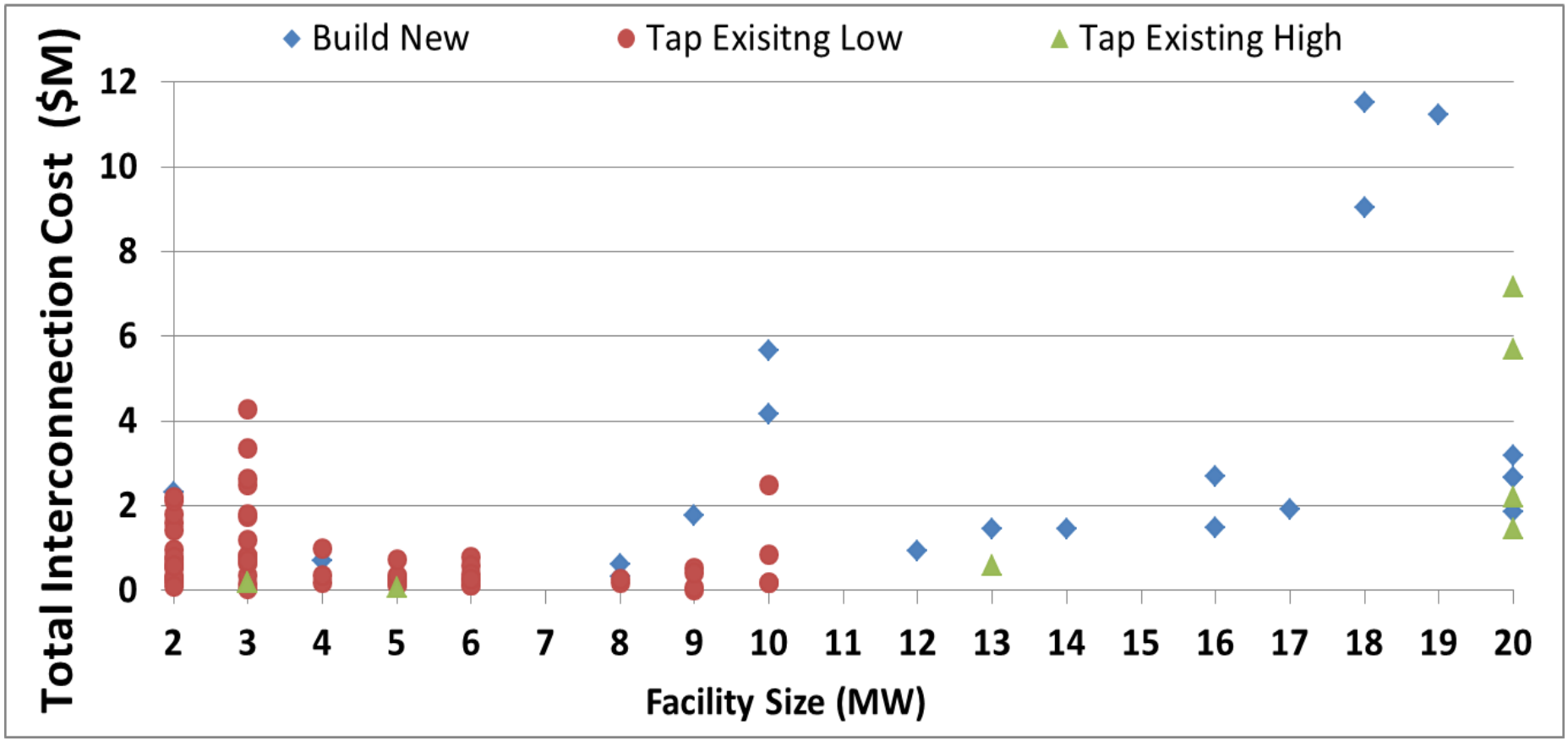

Ranged from $22,000 to $11,516,445. 50% less than $689,431.

Cost Analysis – Cost Per MW vs. Facility Size

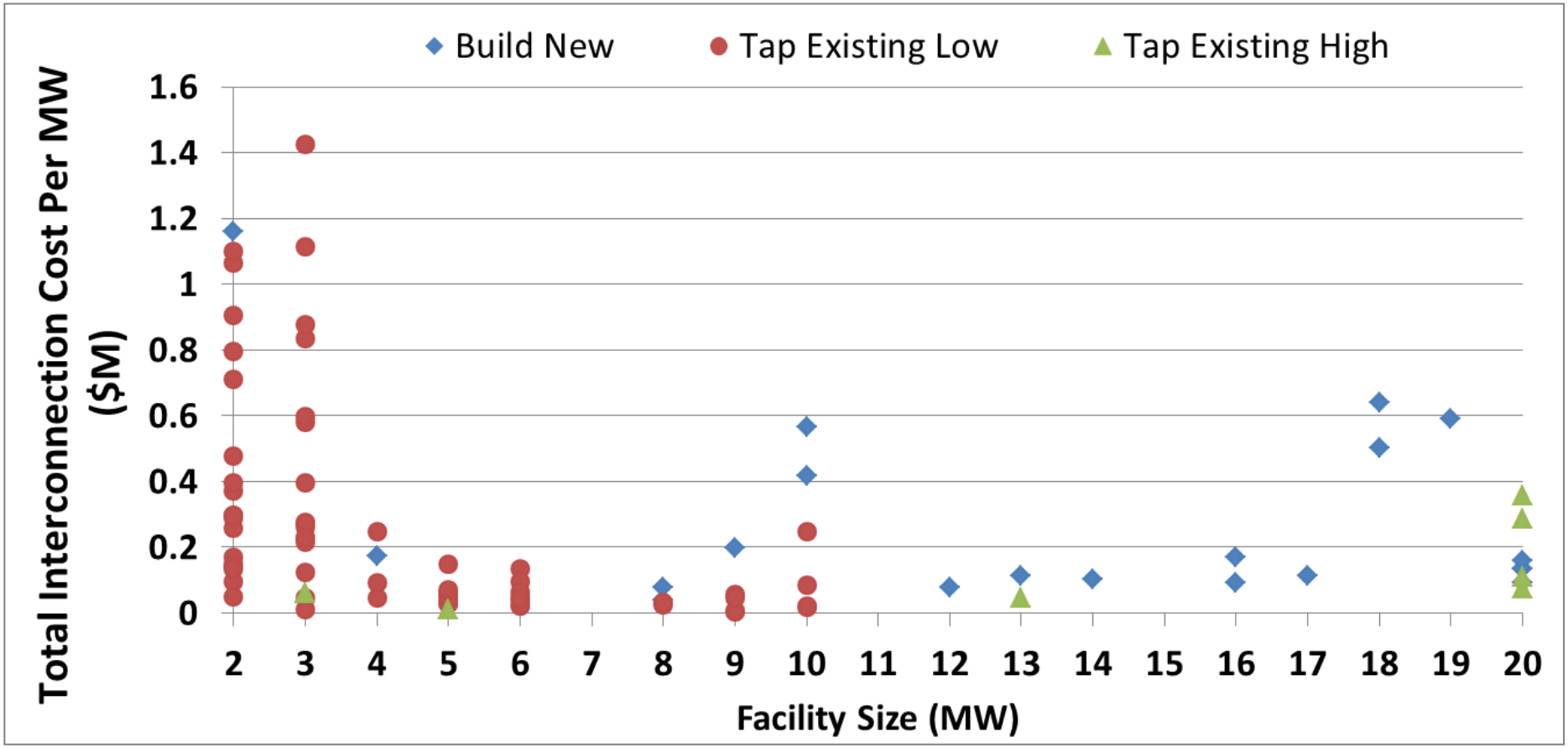

Ranged from $2,444 to $1,424,400. 50% less than $133,833.

Cost Analysis – Interconnection Voltage

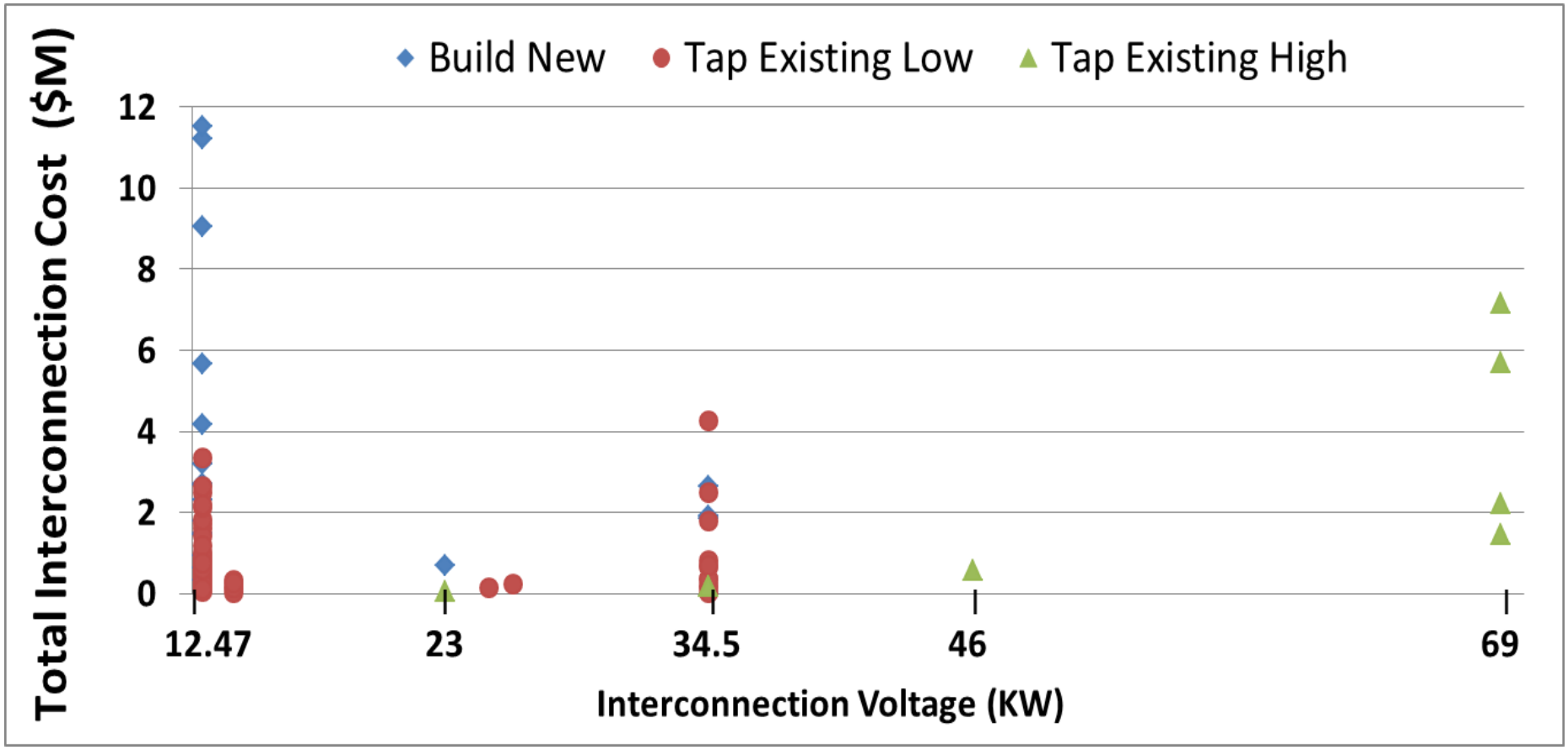

Conclusions

- Interconnection topologies were strongly correlated to the presence/absence of adverse impacts.
- Protection impacts were the most prevalent adverse system impact identified (43%).
- Overvoltage impacts were overall the easiest and least expensive to mitigate, with almost half requiring no added cost.
- Voltage deviation impact mitigations were overall the most difficult and costly.
- SNL work underway to improve interconnection screens and identify the most efficient mitigation strategies for common impacts.

Thank you!

- Jimmy E. Quiroz, jequiro@sandia.gov
- Robert J. Broderick, rbroder@sandia.gov
- "Survey of 100 SGIP Interconnection Studies". Sandia National Laboratories SAND2014-4753, 2014

NREL
NATIONAL RENEWABLE ENERGY LABORATORY

Western Area Power Administration

SunShot
U.S. Department of Energy

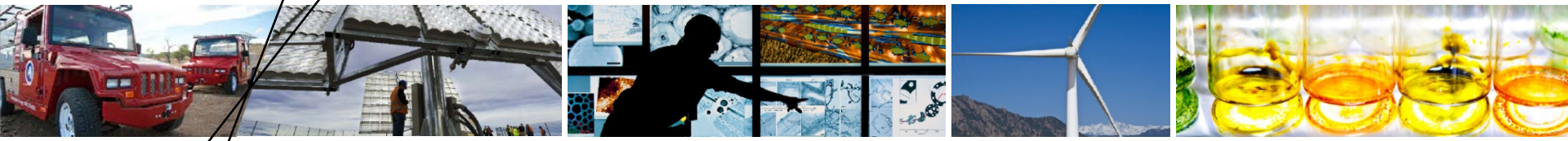

Thank you!

http://www.nrel.gov/tech_deployment/dgic.html