4.0 REDUCING POTENTIAL FOR CLIMATE EFFECTS OF NON-CO_2 GREENHOUSE GASES

4.1 METHANE EMISSIONS FROM ENERGY AND WASTE

4.1.1 ANAEROBIC AND AEROBIC BIOREACTOR LANDFILLS

Technology Description

Landfill bioreactor cell, Yolo County, California

In recent years, bioreactor landfills have gained recognition as a possible innovation in solid-waste management. The bioreactor landfill is generally defined as a municipal solid-waste landfill, operated to transform and more quickly stabilize the readily and moderately decomposable organic constituents of the waste stream by enhancing microbiological processes. There are currently two bioreactor processes – anaerobic and aerobic. Hybrids employ both methods. The primary difference between the two is that, in anaerobic bioreactors, a key objective is to enhance the generation of landfill gas (i.e., methane), by minimizing oxygen infiltration, over a shorter period of years; whereas, in aerobic bioreactors, the objective is to minimize landfill gas generation overall by introducing oxygen into the waste mass. Both methods utilize leachate recirculation and/or supplemental moisture addition as a means to control and enhance moisture levels within the landfill, thereby increasing decomposition.

Current Research, Development, and Demonstration

RD&D Goals

- The first commercial full-scale anaerobic and aerobic bioreactor technology was operational in 2002. The goal is to have three-five commercial full-scale demonstration units operational by the close of 2004.
- Environmental, public-health impacts, and design and operational issues need to be further evaluated.
- Undertake a program of market penetration 2006–2010.

RD&D Challenges

- No long-term, full-scale commercial application demonstrated.
- Environmental, public-health impacts, and design and operational issues need to be addressed.
- A regulatory barrier to the deployment of the bioreactor landfill is the Resource Conservation and Recovery Act (RCRA) Subtitle D that prohibits the addition of liquids to a waste management unit from outside the unit (40 CFR 258.28). Supplemental liquid addition is critical to the operation of the bioreactor landfill.
- The construction and operation/maintenance costs associated with bioreactor landfills are not fully known.

RD&D Activities

- At the present time, bioreactor landfills are in the early stages of full-scale field testing. In the United States, early work on anaerobic bioreactors began in the mid-1980s at landfills in Sonoma County and Mountain View, California.
- As of July 2003, approximately six anaerobic bioreactor projects (including hybrids) are in various stages of deployment or demonstration. Approximately two aerobic bioreactor projects are in various stages of deployment or demonstration. The Environmental Protection Agency (EPA) Project XL program is currently implementing and evaluating five bioreactor landfills and developing a database to track and record information on bioreactor landfills. EPA is funding the development of a bioreactor operations training manual and course.
- In 2001, DOE's National Energy Technology Lab funded a study of the Yolo County Pilot Bioreactor Landfill Demonstration (9,000-ton test cell and 9,000-ton control cell) to study new ways to capture greenhouses gases from the bioreactor landfill.

Recent Progress

- Results from the Yolo County pilot-scale demonstration project showed production of landfill gas in the anaerobic cell was more than six times that of the normal range expected. A tenfold increase in methane recovery rate was observed compared to conventional landfills, which suggest a tenfold reduction in interval of methane generation. The biodegradation rate of the waste was increased thus decreasing the waste stabilization and composting time (5-10 years) relative to what would occur within a conventional landfill (30 or more years).
- Benefits include:
  - Subtitle D established a "dry tomb" sanitary landfill approach to municipal solid-waste disposal, where waste is placed and maintained in dry conditions to minimize potential leachate and gas generation and release. A concern of the "dry tomb" landfill is that the waste may pose a threat to public health and the environment well beyond the prescribed 30-year postclosure maintenance period because the natural decomposition process is retarded. Should the "dry tomb" landfill containment be compromised, significant generation and release of leachate and gas could occur well beyond the postclosure maintenance period. In a bioreactor landfill, controlled quantities of liquid are added and circulated through waste to accelerate the natural biodegradation and composting process of the waste. The bioreactor landfill process may significantly increase the biodegradation rate, such that the waste may be stabilized in a relatively short period of time (5-10 years).
  - Reduction in air-pollutant emissions, especially criteria pollutants and methane early in the decomposition process when landfill gas is collected and combusted.
  - The anaerobic bioreactor may increase gas yields to favor more economical utilization projects in the earlier years of the landfill life while reducing the greenhouse gas burden in the subsequent years. Gas generation during conventional landfilling techniques occurs over long periods of time (more than 30 years).
  - Aerobic technology (i.e., methane elimination) could become a prime candidate technology for landfills in the United States and elsewhere that cannot generate landfill gas in sufficient quality or quantity to economically recover the associated energy. In addition, the technology also could be considered as a follow-on technology for energy-recovery projects at landfills that are no longer producing methane at economically valuable levels.

Commercialization and Deployment Activities
• Several companies, including the largest waste management company in the United States, are working with states and the EPA to demonstrate bioreactor technology.
Market Context
• Municipal solid-waste landfills represent the largest human-made source of methane emissions in the United States (approximately 32%), and account for approximately 55% of waste disposal.
• All new municipal solid-waste landfills constructed in the United States are potential markets.
• Based on the preliminary findings from several bioreactor demonstration projects, landfill gas recovery costs on a $/MMBtu basis will be lower for a bioreactor landfill than for a conventional landfill. The cost reduction could be 25%-50%, depending on how bioreactor costs are allocated.

4.1.2 CONVERSION OF LANDFILL GAS TO ALTERNATIVE USES

Technology Description

Landfill gas to compressed natural gas vehicle refueling station, Los Angeles, California

Conversion to compressed natural gas (CNG) and liquefied natural gas (LNG): Use of landfill gas to produce CNG and LNG for vehicle use has gained interest because: (1) it provides an alternative use for landfill gas projects that cannot use all of the gas recovered; and (2) increasingly stringent diesel emission regulations require use of alternative fuel vehicles. Use of CNG and LNG has been recognized for its environmental benefits because it is a cleaner-burning fuel relative to gasoline and diesel fuel, especially for NO_x and particulate matter (PM) emissions.

Pipeline quality gas and CO_2 production: Since landfill gas is about half CO_2 and half methane, separation of these two gases can generate two separate sources of revenue – commercial CO_2 and pipeline-quality (high-Btu) methane. Since methane is the chief constituent of natural gas, the methane from landfills, once cleaned and processed, can be fed into existing natural gas distribution networks. CO_2 separated from landfill gas can be processed to high-purity (food grade) liquid CO_2, coalbed, oil and gas enhancement; wastewater treatment; dry cleaning; or for the production of dry ice; or to promote plant growth in greenhouses.

Conversion to methanol and ethanol: Landfill methane has been successfully converted to methanol and ethanol, both renewable fuels that produce fewer emissions than gasoline. Landfill gas can be converted to methanol and ethanol for use as a chemical feedstock, hydrogen production, or as a vehicle fuel or fuel additive.

System Concepts

- *Conversion to CNG/LNG:* In general, to produce LNG from landfill gas, the removal of corrosive trace impurities is accomplished through the use of phase separators, coalescing filters, and impregnated\non-impregnated activated carbon adsorbents. Next, a zeolite adsorbent removes remaining polar molecules (specifically water) to a concentration of a few parts per million. Oxygen also must be removed at this point, if present in more than trace quantities. The resultant gas then enters a cryogenic purifier where the carbon dioxide is separated out, leaving a high-grade LNG product consisting of 90%-97% methane. The remainder of the LNG is dissolved nitrogen. Conversion to CNG is a similar process and therefore not addressed here.
- *Pipeline quality gas production:* Landfill gas must be processed to increase its energy content and to meet strict standards for oxygen, hydrogen sulfide, moisture, carbon dioxide, and non-methane organic compounds. The landfill gas also must be free of environmentally unacceptable substances and must be pressurized to the pressure of the pipeline to which the gas production facility is interconnected.
- *Conversion to methanol and ethanol:* Nearly all methanol produced today is made from natural gas. Ethanol is produced primarily from biomass feedstocks. Landfill gas is an alternative, renewable feedstock.

Representative Technologies

- *Conversion to CNG/LNG:* Thermal regenerative purification system.
- *Pipeline quality gas production:* At least three processes are employed to upgrade landfill gas to pipeline quality – membrane separation process, molecular sieve (pressure swing adsorption), and absorption process using a liquid solvent.
- *CO_2 production:* Triple-point crystallization and the use of cold liquid carbon dioxide.
- A CO_2 wash technology removes contaminants from landfill gas. The resultant clean stream of methane and CO_2 can be used as medium Btu gas or can be further refined into products such as CNG/LNG production, pipeline quality gas, and methanol.

Technology Status/Applications

- *Conversion to CNG/LNG:* To date, three landfill-gas-to-CNG projects have been successfully demonstrated worldwide. Los Angeles County, California, has operated a CNG project at Puente Hills Landfill for more

than five years. The CNG plant produces 3,500 psi natural gas equivalent as fuel for several pieces of landfill equipment (e.g., water truck). The first landfill-gas-to-LNG pilot plant recently completed initial performance testing at the Hartland Landfill in Victoria, British Columbia (Canada). By 2004, the first four commercial landfill-gas-to-LNG production and fueling facilities are planned for landfills in California (2), Pennsylvania (1), and Texas (1).

- *CO_2 production:* Triple-point crystallization has been demonstrated. Use of cold liquid carbon dioxide is under development.
- *Pipeline quality gas production:* At least eight projects that convert landfill gas to high-Btu (pipeline-quality) gas are currently in operation throughout the United States. An additional three projects are currently under construction and planned.
- Conversion of landfill gas to methanol and ethanol for use as a vehicle fuel or as a chemical feedstock has been investigated in the United States since the early 1980s.

Current Research, Development, and Demonstration

R&D Goals

- *Conversion to CNG/LNG:* Monitor performance of LNG conversion technology application on landfill gas and converted vehicle performance; development of distribution/fueling infrastructure.
- *Pipeline quality gas production*: Develop cost-effective separation technology applications.
- *CO_2 production*: Evaluate and demonstrate technologies for producing commercial carbon dioxide.
- When technologically feasible and cost competitive, LFG could offset natural gas consumption for the production of methanol and hydrogen.

RD&D Challenges

- *Conversion to CNG/LNG*: No commercial-scale, landfill-gas-to-LNG facility is currently operational. Major drawbacks to using CNG in motor vehicles include the limited driving range of vehicles because of fuel storage capacity constraints. For both CNG and LNG, another limitation has been the availability of fuel dispensing facilities. In addition, the cost to convert vehicles from diesel to CNG/LNG is prohibitive.
- *Pipeline quality gas production*: The cost of the landfill gas clean-up technologies is such that this application is only feasible at the largest landfills (which produce greater quantities of landfill gas), where economies of scale can make projects cost-effective.
- *CO_2 production*: Costs to recompress the CO_2; the need to remove trace contaminants to meet purity requirements for food-grade use; and nontechnical hurdles, such as public perception of a food product developed from landfill gas.
- The major obstacle facing methanol and ethanol production from landfill gas has been the overall economics of the conversion technology and lack of suitable markets for the end product.

RD&D Activities

- *Pipeline quality gas production*: As of July 2003, two studies are currently under development to investigate pipeline gas production at a small landfill in West Virginia, and the production of hydrogen from a landfill in Florida for NASA's Kennedy Space Flight Center (i.e. Space Shuttle fuel).
- *CO_2 production*: Field tests were conducted on producing commercial CO_2 from landfill gas at the Al Turi Landfill in Goshen, New York, with a grant from DOE's Federal Energy Technology Center. A DOE Small Business Innovation Research grant helped fund a demonstration project to convert landfill gas into methane for fuel cell electric generation and pure carbon dioxide to stimulate greenhouse crop growth. Brookhaven National Laboratory is supporting a study that will remove landfill gas contaminants and produce approximately 24,000 gal/day of LNG and 85 ton/day of liquid CO_2 from 4 million scfd of raw LFG.

Recent Progress

- *Pipeline quality gas production:* At least eight projects that convert landfill gas to high-Btu (pipeline-quality) gas are operating in the United States.
- *CO_2 production:* Klickitat Public Utility District in Oregon will generate carbon offsets by use of landfill gas to produce green electricity. The project is expected to produce 2.1 MW of electricity and 13 ton/day of CO_2

while removing contaminants such as sulfur compounds, volatile organic compounds, and siloxanes.

- Under a recently completed Small Business Innovation Research Phase II grant from DOE, Acrion Technologies, Inc., successfully demonstrated the Liquid CO_2 Wash Process with a pilot-scale system at the Al Turi Landfill in Goshen, New York.
- The first commercial-scale application of the Liquid CO_2 Wash Process is under development at a landfill in Ohio.

Commercialization and Deployment Activities

- Currently, few companies manufacture the landfill-gas-to-LNG conversion technology.
- Commercial technologies exist for upgrading LFG to high Btu gas production; however this application is only feasible at the largest landfills.
- Available methanol and ethanol conversion technology is limited.

Market Context

- Conversion of landfill gas to LNG or CNG may be ideally suited for small- to medium-scale landfills, especially with existing gas collection systems. Municipalities and private-sector companies that maintain medium- and heavy-duty vehicles (buses, trash collection, postal service, etc.) – especially in metropolitan areas – represent important markets.
- Commercial CO_2 markets include food and beverage and other industrial applications.
- Pipeline gas and hydrogen production from large landfills.

4.1.3 ELECTRICITY-GENERATION TECHNOLOGIES FOR LANDFILL GAS

Technology Description

Several emerging alternative electricity-generating technologies have significant potential for landfill gas. *Fuel cells* and *microturbines* are technologies that are available in small incremental capacities, have short lead times from planning to construction, and have lower air emissions than other, larger-scale, generation technologies. The modularity of these technologies makes them ideal for use on landfill gas; by adding or removing units, project size can be adjusted to match landfill gas production. *Stirling-Cycle engines* – closed-cycle "hot air" engines – are adaptable for use with landfill gas, are highly efficient, and have low emissions as compared to reciprocating engines. The *Organic Rankine Cycle (ORC)* engine is a process that uses an organic fluid (rather than steam) in a closed cycle to convert thermal energy into mechanical energy resulting in essentially no air emissions. The ORC may represent a technically feasible alternative for electrical generation using landfill gas.

Three 30-kW microturbines are in use at a landfill in Burbank, California, to generate electricity.

System Concepts

- Fuel cells generate electricity through an electrochemical process in which the energy stored in a fuel is converted directly into electricity, thus avoiding the need for combustion. These units can run on hydrogen that is produced from the methane content in landfill gas and use oxygen from the ambient air. Landfill gas cleanup is an important issue as fuel cells employ catalysts that could be fouled by trace compounds in landfill gas.
- The microturbine is a derivative of the much larger combustion turbines employed in the electric power and aviation industries. Microturbines spin at much faster speeds than traditional combustion turbines.
- Both fuel cells and microturbines generate a significant amount of thermal energy that can be easily captured for use (i.e., hot water/steam), thus increasing the total efficiencies of these units.
- In the Stirling engine, gas is contained in a continuous, closed volume that is divided into hot and cold regions. The size of the volume is periodically varied to compress and expand the gas. Heating and cooling are accomplished by periodically transferring working gas between the hot and cold regions. Since the engine derives its heat from an external source, almost any type of fuel (e.g., landfill gas) or combustible material can be used.

Representative Technologies

- Microturbines currently on the market use air bearings rather than traditional mechanical bearings in order to reduce wear. Combustion air and fuel are mixed in a combustor section, and the release of heat causes the expansion of the gas. Hot gas is sent through a gas turbine that is connected to a generator. Units are normally equipped with a recuperator that heats combustion air using turbine exhaust gas in order to increase the unit's overall efficiency. Combustion air is compressed using a compressor that is driven by the gas turbine. Use of landfill gas requires gas compression.

Technology Status/Applications

- Several types of fuel cells using different electrolytes are either available or under development. The four basic electrolyte types are: (1) phosphoric acid, which is commercially available and has been demonstrated commercially on landfill gas; (2) molten carbonate, which has also shown promise for landfill gas use; (3) solid oxide; and (4) proton exchange membrane (polymer-membrane).
- The microturbine is a recently commercialized technology. As of July 2003, six microturbine projects (3 megawatts) are operational, and four additional projects are under construction.
- Since January 2003, the first successful demonstrations of 2-25 kW and 10-25 kW Stirling-Cycle engines using landfill gas are operational at two landfills in Michigan.

Current Research, Development, and Demonstration
RD&D Goals • Evaluate and demonstrate use of landfill gas as a fuel source for fuel cells and appropriate and cost-competitive cleanup technologies. • Demonstrate long-term performance of microturbines on landfill gas, improve component corrosion protection, and develop larger microturbines. • Demonstrate Stirling-Cycle engine at additional landfills; and evaluate technical, economic, and environmental considerations by 2004. • Demonstrate first organic rankine cycle engine use at a landfill by 2004. **RD&D Challenges** • For fuel cells, developing cleanup technologies for landfill gas that are adequate but not cost prohibitive. • For microturbines, dealing with potential fouling and failure of the turbine unit from silica or other components in landfill gas, and potential corrosion and excessive wear of components due to constituents found in landfill gas. In addition, microturbines are not currently cost competitive with traditional reciprocating engines. The total cost of power production, based on net power output and assuming retirement of the capital cost during 10 years at an interest rate of 10%, would be \$0.07–\$0.14/kWh (\$0.04-\$0.06 for recip. engine). • High cost to develop and demonstrate Stirling engine and organic rankine engine; no commercial-scale units have been designed or demonstrated. • Continued testing and commercialization of fuel cell and microturbine technologies. • Technologies/processes to pretreat landfill gas prior to introduction to fuel cells and microturbines. • Development of larger microturbines (i.e., greater than 75 kW). • Development of larger Stirling engines and continuing to test Stirling and organic rankine cycle technologies. **RD&D Activities** • EPA-funded phosphoric acid fuel cell demonstration on LFG in California; the same system was also demonstrated in Connecticut. DOE/EPRI funded a molten carbonate fuel cell on LFG; EPA funded a study to evaluate LFG cleanup technologies for use with fuel cells; and a DOE small-business innovative research grant funded a demonstration converting LFG to methane for fuel cell use. • Three microturbine demonstration projects with landfill gas have been completed since October 1999 – a 75-kW unit in New Mexico and California, and a 30-kW unit in California. In 2000, EPA funded a demonstration of a microturbine on landfill gas in Oregon. In 2001 and 2002, EPA funded two additional microturbine demonstration projects in Virginia and Vermont to test new microturbine technologies. • Today, one manufacturer is developing commercially viable Stirling engines versions for landfill application (up to 250 kW). • Since 1999, the Salt River Project (led by DOE and a municipal utility located in Phoenix, Arizona) is demonstrating the operation of the first thermal hybrid electric sundish. This technology combines solar thermal heliostats and a Stirling cycle engine using landfill gas (dual "fuel" Stirling cycle engine).
Recent Progress
• A phosphoric acid fuel cell is currently operating on landfill gas from the Braintree, Massachusetts, landfill. • Microturbines have been demonstrated to operate on landfill gas with a low methane content, and have demonstrated NO_x emissions less than one-tenth those of the best performing reciprocating engines • Demonstration of the first thermal hybrid electric sundish (combines solar and Stirling cycle engine using landfill gas) has been running successfully since 1999. • Since January 2003, the first successful demonstrations of 2-25 kW and 10-25 kW Stirling cycle engines using landfill gas are operational at two landfills in Michigan.

Commercialization and Deployment Activities
• Phosphoric acid fuel cells are commercially available today, and many are installed worldwide. Most are using fuels other than landfill gas, but this type of fuel cell has been successfully demonstrated on landfill gas. Molten carbonate fuel cells have been operated on landfill gas – as well as a variety of other fuels – and this type of fuel cell looks particularly promising for landfill gas application due to its tolerance of CO_2. • As of July 2003, two companies manufacture and sell landfill gas microturbines. Five commercial microturbine projects (3 megawatts) fired by landfill gas have been operational since January 2002. • One landfill gas pilot-plant study has been conducted for Stirling technology, and no organic rankine cycle pilot projects are planned. This may be due to resistance to "new" technology (even though the technology has been operating successfully in other applications) and current economic factors of electrical generation.
Market Context
• A market for these technologies exists wherever there is a need for electricity generation capacity. Hundreds of thousands of landfills and open dumps exist worldwide, all of which generate some amount of methane.

4.1.4 ADVANCES IN COAL MINE VENTILATION AIR SYSTEMS

Technology Description

Lean fuel turbine running off of ventilation air methane and drained gas. (Courtesy of Energy Developments Ltd.)

Ventilation air methane equipment (Megtec Vocsidizer) in Australia. (Courtesy of BHP Billiton Ltd).

Gassy underground coal mines emit more than 35 million tonnes (metric tons) of CO_2 equivalent (MtCO2e) of methane through their ventilation shafts. Until recently, because of the very low concentration (typically below 1%) of methane in ventilation air, coal operators had no technically proven option to recover this gas for its energy value. However, during the past decade, technologies have been developed and adapted that offer the promise of mitigating most of these emissions at low cost. One family of technologies being developed is the catalytic and thermal flow reversal reaction of ventilation air methane. These technologies may use up to 100% of the methane from ventilation shafts, and the byproduct heat may be used for the production of power or to satisfy local heating needs. Another prospective technology allows for the direct use of air mixed with down to 1% methane to produce power in gas turbines. This approach may require enriching the concentration of the air flow but may be a lower capital cost means of producing power.

System Concepts

Flow Reversal Reactors

Both catalytic and thermal-flow reversal technologies employ the principle of regenerative heat exchange between a gas and a solid bed of heat-exchange medium. Ventilation air flows into and through the reactor in one direction, and its temperature increases until the methane is oxidized. Then the hot products of oxidation lose heat as they continue toward the far side of the bed, until the flow is automatically reversed.

- Thermal reactors operate above the auto-ignition temperature of methane (1,000ºC). Catalytic reactors reduce the auto-ignition temperature significantly.
- Both types of reactors produce heat, which, through use of heat exchange technologies, may be transferred for local heating needs or for the production of power in steam or gas turbines.

Lean Fuel Turbines

- Some lean-fuel turbine concepts employ catalysts to aid the combustion.
- Others take place in an external combustor without catalysts but at a lower temperature than with normal turbines.
- Depending on the methane concentration, these technologies may use ventilation air for more than 80% of all fuel if concentrations are high, or less than 20% with low concentrations.

Representative Technologies

- Thermal-flow reversal reactors require a higher auto-ignition temperature that may require more sophisticated heat-exchange technologies.

- Catalytic flow reversal reactors have a lower auto-ignition temperature that may make heat exchange less costly, but they require catalyst material.
- Lean-fuel turbines under development include microturbines and larger scale turbines.
- Ancillary uses for ventilation air methane exist, such as the use of some ventilation air methane as the combustion air for power projects. This approach is technically straightforward and commercially proven, but the greenhouse gas reduction potential is limited.

Technology Status/Applications

- The Environmental Protection Agency (EPA) has identified and evaluated two specific flow reversal reaction technologies. Based on laboratory and field experience, both technologies may sustain operation with ventilation air with methane concentrations as low as 0.1%.
- These reactors have been applied for oxidation of volatile organic pollutants and have been successfully tested at small scale with ventilation air methane. Both thermal and catalytic flow reversal technologies may be used for the simple oxidation of methane (reducing methane emissions); and for the heat product, which may be used for production of power or direct heating.
- The EPA is working with technology vendors to identify viable lean fuel turbines and to improve their applicability for real-world ventilation air methane projects and identifying sites and partners for field demonstration. The EPA is also exploring an array of technologies for the use of ventilation air methane.

Current Research, Development, and Demonstration

RD&D Goals

- First commercial-scale field unit to demonstrate oxidation-only in 2003 and 2004.
- First commercial-scale field unit to demonstrate oxidation and heat recovery (power) in 2004 and 2005.
- A program of market penetration to be undertaken 2005-2010, ultimately leading by the end of the program to the majority of ventilation air methane emissions mitigated.

RD&D Challenges

- No commercial-scale unit has been designed or demonstrated.
- Heat-recovery technologies must be adapted from other industries for application at mine ventilation shafts.
- Safety design issues need to be addressed.

RD&D Activities

- Several technology developers/vendors are working with the coal industry, EPA, and DOE to develop the first commercial-scale projects.
- Tests are underway in Australia for the oxidation and heat recovery (via hot water) of a small, noncommercial-scale unit.
- EPA is providing technical support for technology vendors in identifying markets, performing safety analyses, and supporting project development.
- EPA and DOE are working with CONSOL Energy, a large coal operator, to demonstrate thermal oxidation of ventilation air methane using Megtec's Flow Reversal Reactor.

Recent Progress

- A project in Australia commercially employed ventilation air methane as feed air in internal combustion engines. The ventilation air methane provided approximately 7% of the total energy for the project at nominal cost.
- Tests prove that flow-reversal reactors can successfully sustain reactions down to a methane concentration in air of 0.1%.
- Small-scale demonstrations at coal mines have shown that ventilation air methane can be safely deployed at noncommercial scale, and that heat recovery is technically viable.

Commercialization and Deployment Activities
• Project vendors and developers are working with coal operators to develop ventilation air methane projects in the United States.
Market Context
• Majority of emissions in the United States at fewer than 30 very gassy ventilation shafts.
• Heat recovered likely will interest power generators. Potential for more than 450 MW of power production available.
• Markets for these technologies exist worldwide in countries with gassy coal seams and coal mining industries such as Australia, Canada, China, India, Mexico, Ukraine, Russia, and Poland.

4.1.5 ADVANCES IN COAL MINE METHANE RECOVERY SYSTEMS

Technology Description

In-mine directional drilling.

Vertical drainage in advance of mining.

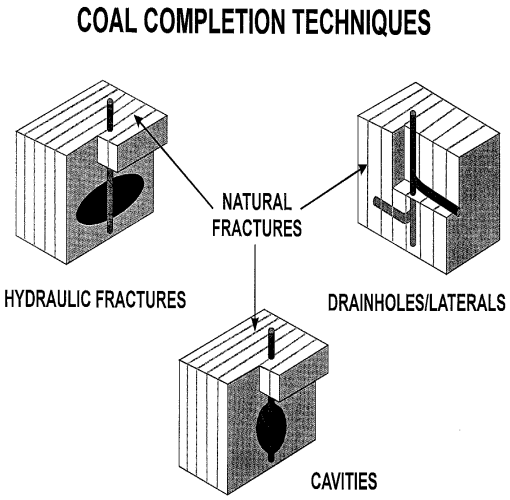

Coal mine methane (CMM) is liberated into underground coal mines – as coal seams are mined – and vented out of the mine to provide a safe working environment. Where ventilation air cannot adequately control these emissions, mine operators utilize a CMM drainage system. Drainage systems consist of boreholes drilled into the coal seams and adjacent strata, and equipment is used to extract and collect CMM. Dependent on geologic, reservoir characteristics, and mine layout, CMM can be recovered in advance of mining or after mining has occurred. State-of-the-art CMM drainage techniques are now available to mine operators. Advances in steerable motors and stimulation techniques have increased the ability to recover CMM far in advance of actual mining operations. This allows operators to recover a higher percentage of the total methane in coal seams. The most promising technologies either necessitate fewer wells to produce more gas or increase the recovery efficiency of surface wells or underground boreholes. This CMM, much of which is high quality, presents many alternatives for utilization and markets.

System Concepts

- Boreholes are drilled into the coal seams and adjacent gas-bearing strata vertically or horizontally from the surface or from within the mine, depending on geologic, reservoir, and mine design and conditions.
- Various drilling technologies are employed to promote the release of the CMM.
- Gathering systems are used to collect and vent the CMM or distribute the gas to a specific use such as a natural gas pipeline. CMM recovered through drainage systems would have otherwise been vented through mine ventilation systems.

Representative Technologies

- Directional drilling systems that enable fewer wells to contact the same quantity of coal.
- Advanced stimulation techniques that use injection of a second gas such as nitrogen to improve recovery.

Technology Status/Applications

- Directional drilling, applied in conjunction with flexible coiled tubing and high pressure water jets, has been downscaled and applied to coalbed methane reservoirs.
- Operators also have demonstrated and commercialized slant-hole directional drilling, which involves the drilling of a guided surface hole that intersects the targeted coal seam and continues drilling within the bounds of a coal seam.

- Recent innovative methods for enhancing the recovery of methane from coalbeds by injection of second gases such as nitrogen are being tested. Carbon dioxide, while potentially attractive for unmineable seams, is not appropriate for coalbed methane development associated with mining because CO_2 is a hazard in the underground mining environment. Further work regarding the use of nitrogen is required.
- Computer simulation has suggested various configurations of in-mine directionally drilled boreholes and surface vertical wells to optimize CMM drainage approach.

Current Research, Development, and Demonstration

RD&D Goals

- Refined directional drilling technologies to improve the application in friable coal seams, increase drilling depths, and reduce the cost of drilling.
- Application of in-mine hydraulic fracturing techniques.
- Additional data supporting nitrogen injection as a cost-effective alternative for improving recovery efficiencies.
- In-mine application of nitrogen-injection techniques.
- Use of other inert gases as a second gas for injection into mined coal seams.
- New drilling techniques that could improve recovery of coalbed methane.
- Further applications of surface oil and gas drilling, as well as completion technologies and their application for in-mine CMM recovery.

RD&D Challenges

- Must locate demonstration projects at coal mines to clearly establish greenhouse gas reductions, but the number of very gassy mines in the United States is limited to about 30-40 coal mines.
- Must develop products that the mining community considers a help rather than a hindrance.
- Must directly link gas recovered to methane emissions avoided. Total coal mine methane emissions (ventilation air methane and drained emissions) does not increase due to improved drainage technologies; rather, ventilation air emissions decrease when drained gas emissions increase. Must consider this when assessing total methane emissions at a specific project.

RD&D Activities

- Several U.S. companies have developed directional drilling techniques, both vertical and horizontal, which are currently being evaluated.
- Use of CO_2 and nitrogen have been laboratory tested and/or field tested by private industry and research institutes.
- U.S. government funding has focused on gas utilization techniques, rather than recovery enhancement.

Recent Progress

- Reports indicate that directional drilling and injection of a second gas have demonstrated drainage efficiencies of 50%-90%.
- Slant-hole drilling has been used successfully to date at the SASOL Secunda Operations in South Africa. SASOL Secunda has drilled in excess of 100,000 meters of the surface to in-seam wells, regularly reaching target depths of up to 2 km. Dallas-based CDX Gas has successfully commercialized a surface directional drilling technique called the "Pinnate" multilateral drainage networks, and a dual-well drilling and production system.
- Nitrogen tests appear to be successful, but results are confidential.
- If the national, industry-wide drainage efficiency at underground mines increased from the current average of 34%-50%, then the United States could realize an additional 8 $MtCO_2e$ emissions reductions.

Commercialization and Deployment Activities
• Projects in the United States are currently employing directional drilling on a limited basis. • Carbon dioxide injection has been used for enhanced oil production for quite some time, and is being evaluated by the Alberta Research Council and an international consortium of Canadian and U.S. organizations. The results are confidential at this point. CO_2 injection does not appear appropriate for coal mine applications, however. • Nitrogen injection to enhance methane recovery from mineable coal seams needs demonstration. **Market Context** • Gassy coal mines in the United States, where improved gas recovery efficiencies will yield greater coal mine productivity and natural gas for use or resale are potential markets for this technology. • Additional gas recovered likely will interest gas users such as gas marketers, power generators, etc. • Markets for these technologies exist worldwide in countries with gassy coal seams and coal-mining industries such as Australia, Canada, China, India, Ukraine, Russia, and Poland. • Beyond carbon reductions, market for these products will be found in the exploration and production sector of the natural gas industry.

4.1.6 MEASUREMENT AND MONITORING TECHNOLOGY FOR NATURAL GAS SYSTEMS

Technology Description

Handheld infrared remote imaging spectrometer for fugitive gas leak detection.

Hi-Flow™ Sampler to measure emission rates.

There are approximately 300,000 miles of pipeline in the U.S. natural gas transmission network. Along this network, compressor stations – with up to 2,500 separate components each – leak millions of dollars worth of methane into the atmosphere every year. In addition, there are more than 700 gas-processing facilities that lose an estimated 30 billion cubic feet of gas each year. Through the use of effective leak detection and measurement technology as part of a directed inspection and maintenance program, methane emissions can be reduced significantly.

System Concepts

- Advanced leak detection and measurement technologies enable quick and cost-effective detection and quantification of fugitive methane leaks.
- Directed inspection and maintenance programs employ these technologies through the collection of screening and measurement data through comprehensive surveys in the first year. Information gathered on equipment with high leak rates is then used to direct surveys and prioritize cost-effective leak repair efforts in subsequent years. Because leak surveys and repairs are better focused and more accurate, they can be conducted less frequently, thereby reducing operation and maintenance costs.

Representative Technologies

- The Gas Technology Institute (GTI) has developed an advanced measurement technology known as the Hi-Flow™ Sampler. This technology is unique because it measures actual emission rates from sources that traditionally were not easily measured. The Hi-Flow™ utilizes a variable-rate induced-flow sampling system that provides total capture of the emissions from a leaking component. The instrument is designed to ensure total emissions capture, and prevent interference from other nearby sources. A dual-element hydrocarbon detector (i.e., catalytic-oxidation/thermal-conductivity), measures hydrocarbon concentrations in the captured air stream ranging from 0.01% to 100%. A background sample-collection line and hydrocarbon detector allows the sample readings to be corrected for ambient gas concentrations. A thermal anemometer monitors the mass flow rate of the sampled air-hydrocarbon gas mixture, and a mass rate is then calculated.
- GTI (in cooperation with Pacific Advanced Technology) is also developing advanced leak-detection technology. One of the emerging technologies is the IMSS camera, a handheld infrared remote imaging spectrometer for fugitive gas leak detection. It detects species by comparing differential absorption spectra. The device can detect low flow and underground methane leaks from a maximum of 300 feet away but is more effective at a distance of around 50 feet or less.

Technology Status/Applications

- Traditional leak measurement technologies are currently available. Advanced technologies, like the Hi-Flow Sampler, are in the demonstration and deployment stage.
- Advanced imaging technology for leak detection is still in the development and demonstration phases. Next-generation technology may provide the ability to both detect a leak and quantify the emission rate.

Current Research, Development, and Demonstration

RD&D Goals

- Complete the development of advanced measurement technologies like the Hi-Flow™ and ensure broad deployment throughout the industry.
- Advance the development of imaging technology for methane leak detection and facilitate demonstration.

RD&D Challenges

- No commercial-scale unit designed or demonstrated.
- Safety design issues need to be addressed.

RD&D Activities

- Advanced measurement technologies already are being demonstrated. Additional research to enhance this technology is underway.
- Identification and adaptation of new technologies for real-time remote optical leak detection, quantification, and speciation is underway. Preliminary testing indicates the ability to image low-flow conditions and under-ground methane leaks.
- The Kansas State University National Gas Machinery Laboratory and EPA's Natural Gas STAR Program are collaborating on a study to demonstrate the cost-effective use of measurement technology to reduce methane leakage from natural gas production and processing facilities.

Recent Progress

- As part of a cooperative R&D effort among the EPA, the Gas Technology Institute, and the natural gas industry, the effectiveness of utilizing the Hi-Flow™ Sampler measurement technology to reduce methane leakage at three gas-processing plants was evaluated. The value of natural gas losses at the surveyed sites was approximately $2.2 million, substantially offsetting the cost of the surveys.
- Preliminary testing of the IMSS technology for leak detection has been successful. In a recent test conducted by PAT, IMSS successfully imaged leaks as small as 0.01 cubic feet per minute in ambient conditions, using either a building or the sky as background.

Commercialization and Deployment Activities

- Both the IMSS camera and Hi-Flow™ Sampler are not yet available for commercial applications. Prototype versions of the Hi-Flow™, however, already have been used by several large transmission companies.

Market Context

- Gas transmission and processing companies are most likely to be interested in these technologies. Gas distribution and production companies, however, are also likely to be potential consumers.

4.2. METHANE AND NITROUS OXIDE EMISSIONS FROM AGRICULTURE

4.2.1 ADVANCED AGRICULTURAL SYSTEMS FOR N_2O EMISSION REDUCTION

Technology Description

No-tillage cropping system in irrigated agriculture to reduce Net global warming potential (A.D. Halvorson, USDA-ARS, Fort Collins, CO)

Low fertilizer nitrogen-use efficiency in agricultural systems is primarily caused by large nitrogen losses due to leaching and gaseous emissions (ammonia, nitrous oxide, nitric oxide, nitrogen). It is axiomatic then that most strategies that increase the efficiency use of fertilizer nitrogen will reduce emissions of N_2O and probably NO. In general, nitrogen oxide emissions from mineral and organic nitrogen can be decreased by management practices that optimize the crop's natural ability to compete with processes where plant-available nitrogen is lost from the soil-plant system, and/or by directly lowering the rate and duration of the loss processes. Strategies to increase the overall efficiency of nitrogen are therefore necessary to decrease nitrogen oxide emissions. Advanced agricultural systems are a group of technologies that can be applied to this goal. These systems enable a process of collecting and using increasingly detailed, site-specific information in conjunction with traditional farm-management tools, and applying the best available information to better manage individual farming operations. These systems conceptually provide for improved understanding, control, and manipulation of the soil/plant/atmosphere environment to match nutrient, water, pesticide, and other inputs for crop production demand, which will increase efficiency of nutrients and decrease gaseous and leaching losses. These systems provide an integrated capability to improve environmental quality while enhancing economic productivity by increasing energy efficiency, optimizing fertilizer and other chemical applications, and conserving soil and water resources. Most system concepts for reduction of GHG emissions are, however, theoretical and remain untested.

System Concepts

- Precision agriculture – global-positioning infrastructure and remote and in-situ sensors for soil, crop, and microclimate characterization; this practice includes variable rate water, fertilizer, and pesticide application in space and time.
- Cropping system models, data and information analysis, and management tools.
- Control-release fertilizer and pesticide delivery to match crop demand and timing of pest infestation.
- Biological and chemical methods for manipulating soil microbial processes to increase efficiency of nutrient uptake, suppress N_2O emissions, and reduce leaching.
- Best-management practices to limit nitrogen gas emissions, soil erosion, and leaching.
- Soil-conservation practices utilizing buffers and conservation reserves.
- Recycling of livestock manure.
- Plant breeding to increase nutrient-use efficiency and decrease demand for pesticides and energy consumption.

Representative Technologies

- Global-positioning satellites and ground systems, satellite- and aircraft-based remote and in-situ electrical, magnetic, optical, chemical, and biological sensors.
- Advanced artificial intelligence and information networking technologies; autonomous control and robotics systems; soil/ crop moisture, pest and microclimate responsive (smart) materials.
- Control-release fertilizers and pesticides.
- Nitrogen transformation inhibitors.
- Livestock waste delivery systems.
- Best-management practices.
- Genetically engineered plants that are resistant to herbicides or specific pests.

Technology Status/Applications

- Many first-generation precision agriculture technologies are available; in 1998, used on about 14% of farms.
- Information management and networking tools; rapid soil-characterization sensors; selected crop stress, yield, and quality sensors; and a systematic integration of all technologies for all major cropping systems are not yet at technical performance levels and require field testing.
- Strong understanding of soil microbiology and soil processes and relationships exist in the agriculture, energy, and university research community.
- Capability exists for the development of control-release materials and biological process inhibitors.
- Best-management practices are in place in many production sectors.

Current Research, Development, and Demonstration

RD&D Goals

- Precision agriculture technologies that improve production efficiencies and reduce energy consumption.
- Remote and field-deployed sensors/monitors and information-management systems for accurate, real-time monitoring and analysis of crops, soils, water, fertilizer, and agricultural chemicals use/efficiency to meet the fertilizer and energy reduction goals.
- Smart materials for prescription release utilized in major crops.
- Advanced fertilizers and technologies to improve fertilizer efficiency and reduce nitrogen inputs.
- Methods of manipulating soil microbial processes to increase efficiency of nitrogen use.
- Deployment of first-generation integrated system models, technology, and supporting education and extension infrastructure.
- Genetically designed major crop plants to utilize fertilizer more efficiently.
- Complete transition of first-generation system development to the private sector.
- Full utilization of best-management practices.

RD&D Challenges

- Precision agriculture in general requires advances in rapid, low-cost, and accurate soil nutrient and physical property characterization; real-time crop water need characterization; real-time crop yield and quality characterization; real-time insect and pest infestation characterization; autonomous control systems; and integrated physiological model and massive data/information management systems. All of these require a full understanding of the spatial and temporal dynamics that occur within a field.
- Smart materials that will release chemicals based on soil and crop status depend on modest breakthroughs in materials technology.
- Improved understanding of specific soil microbial processes is required to support development of methods for manipulation and how manipulation impacts greenhouse gas emissions.
- Models that represent accurate understanding of plant physiology must be coupled with models that represent soil processes such as decomposition, nutrient cycling, gaseous diffusion, water flow, and storage to understand how ecosystems respond to environmental and management change.
- Detailed and simultaneous examination of biogeochemical reactions that occur in near-surface groundwater is required to improve understanding of nutrient cycling, GHG emissions, and degradation of contaminants.
- Improved understanding of agro-ecosystem management on nitrogen cycling and GHG emissions.
- Development of plant varieties that increase nutrient use efficiency.
- Conduct direct basic and applied research effort on sensors, information sciences, materials, and microbial processes.
- Apply whole-systems engineering and integration to effectively develop and guide program formulation and implementation to include the concept of whole system net GHG emissions.

RD&D Activities

- Complementary efforts are underway in both public and private sectors.
- Sponsors include USDA, DOE, NASA, universities, state agencies, commodity groups, and sensor and satellite developers – the principal funding comes from USDA.

Recent Progress
• High-resolution satellite imagery can identify stress and disease in some crops at 1-to-2-m resolution. • Research programs have related reflectance spectra to disease or nutrient status. • Control-release formulations for fertilizers and pesticides are in use. • Rf-link deployable field sensors exist for ground moisture monitoring. • On-farm use of yield-monitoring equipment is increasing. • Commercial sensors for sensitive, precise, and rapid analysis of GHGs are now marketed. • Best-management practices are in place for many crops and regions of the country. • Genetically modified crop varieties are being used that are resistant to specific herbicides or pests.
Commercialization and Deployment Activities
• Global-positioning systems, geographic information system software for parameter mapping, remotely sensed imagery, selected field monitors, and selected variable rate control systems for seed, fertilizer, and chemical applications are commercialized and in application in the United States, Canada, Australia, and Europe. • Slow-bleed release pesticides are available commercially. • Nitrogen transformation inhibitors are available commercially, and were applied to approximately 10% of corn acres in 1996. Inhibitor application increased net revenue $8-$20/acre. • Control-release fertilizers are produced and used mainly in horticultural and ornamental crops. **Market Context** • Market for technologies exists not only in the United States but worldwide. In developing countries dependent on agriculture, the market for improved agricultural systems is substantial.

4.2.2 METHANE REDUCTION OPTIONS FOR MANURE MANAGEMENT

Technology Description

Construction of a complete mix anaerobic digestion system

The livestock and poultry industry produces large quantities of manure each year. Pollutants from improperly managed waste can damage the environment in terms of water, air, and health quality. Methane and other gases are produced when manure is managed under anaerobic conditions typically associated with liquid or slurry manure-management systems such as lagoons, ponds, tanks, and basins. Methane reduction and other environmental benefits can be achieved by utilizing a variety of technologies and processes including aeration processes to remove and stabilize some pollutant constituents from the waste stream; anaerobic digestion system that collect and transfer manure-generated off-gases to energy producing combustion devises (such as engine generators, boilers, or odor-control flares); and solids-separation processes to remove some pollutant constituents from the waste stream.

System Concepts

- *Anaerobic digestion* provides a high level of manure treatment that mitigates water and other air pollution by biologically stabilizing (treating) influent waste materials and capturing methane emissions. Captured gas can then be combusted to produce electricity, heat, or vehicle fuel. Anaerobic digestion technologies can be applied at various scales (i.e., farm or centralized) and require separate effluent storage and a gas use device. Centralized anaerobic digestion technologies can be cost-effectively integrated into high-density livestock regions, where a number of farms would transfer manure to a dedicated processing facility. Centralized systems can produce very large power outputs (1-20 MW) depending on the manure volume and quality. Comparatively centralized systems can use technologies with greater complexity, because these plants typically have a professionally trained team available to operate the system.
- *Separation processes*, typically used in dairy operations, remove particulate matter from manure handled as liquid or slurry through gravity, mechanical, or chemical methods. These processes create a second waste stream that must be managed using techniques different from those already in use to manage liquids or slurries. Separation processes offer the opportunity to stabilize solids aerobically i.e., to control odor and vermin propagation.
- In *aeration processes*, oxygen is transferred to a liquid primarily by mechanical equipment. The equipment serves to a) provide the oxygen needed by the microorganisms to oxidize the organic matter and b) keep the solids in suspension by mixing. A residual-dissolved oxygen concentration of at least 1-2 mg/L is an indicator that the rate of oxygen transfer is adequate to satisfy this oxygen demand aerobically for livestock waste. This requirement is usually met by large pumps operating in the range of about 50-125 HP.

Representative Technologies

- *Centralized digester technologies* include both mesophilic and thermophilic mixed digesters and other advanced environmental processes such as reverse osmosis and gas compression. Thermophilic digesters operate at high temperatures (140ºF). Mesophilic operate at lower temperatures (about 105ºF) and have greater process stability. Currently available combustion devices include medium-BTU reciprocating engines with heat recovery (cogen), turbines, boilers, absorption cooling, and furnaces. Flares also can be used to control odor and other air emissions in nonenergy applications. Emerging technologies include microturbines, sterling engines, and fuel cells.
- *Farm-scale digesters* are typically simpler systems operating at ambient and mesophilic temperatures and include mix, plug, and inground covered systems.

- *Separation process technologies* include gravity separation (shallow pits where solids settle and liquids run off to a treatment lagoon), mechanical separators (use external energy sources to remove solids), and flocculation or precipitation (chemical additions are used to help precipitate particulate and colloidal materials).
- A variety of *aeration process technologies* exist, including aerobic digestion (a suspended growth process operating at ambient temperature), autoheated aerobic digestion (utilizes heat released during the microbial oxidation of organic matter to raise process temperature above ambient levels), sequencing batch reactors (combine the conventional activated-sludge treatment process with secondary settling/clarification in a single tank), attached-growth processes (trickling filters, rotating biological contactors, and packed bed reactors use inert media to stabilize organic matter and limit organic loading rates), and composting (a solid-waste treatment process that requires oxygen and appropriate carbon:nitrogen ratios to heat and stabilize waste material.)

Technology Status/Applications

- There are currently about 50 farm-scale anaerobic digesters producing heat and about 30 million kWh of electricity per year with currently available technologies at U.S. dairy and swine farms. A small number of farms also flare gas for odor control and GHG reductions. There are no centralized anaerobic digesters operating in the United States, although Europe has several of these systems.
- Separation is typically used in the dairy industry to remove nonbiodegradable material from treatment lagoons, but is rarely applied to managing wastewater from swine facilities because swine solids are small, heavy, tend to mat, and hold water. Additional equipment and management is required to maintain adequate air infiltration for aerobic conditions.
- Aeration processes are basically applied to low-strength and dilute waste streams due to energy requirements. Their use has been limited for livestock liquid and slurry waste streams.

Current Research, Development, and Demonstration

RD&D Goals

- Develop new types of digesters with reduced costs and biological efficiencies. A number of private companies are developing and testing newer gas combustion devices for medium-BTU gases.
- Modification to under-slat floors in swine buildings to separate solid and liquid fractions and chemical additions applied to swine manure.
- Develop, apply, and evaluate aeration process performance for manure waste streams. Identify appropriate pollution-control methods for confined livestock facilities.

RD&D Challenges

- Current R&D on anaerobic digestion technologies is done at bench or pilot scales. These processes often are operationally complex at commercial scales. This complexity may be justified under a centralized operating structure because dedicated expertise is available to control system processes. Continued work in this area needs to identify regional areas with greatest opportunity to implement this approach relative to farm distances, manure-handling method, and frequency of collection.
- Utility policies toward independent power producers impede development of digestion technologies for power generation. Increasing operational reliability and efficiency of electrical production equipment and increasing the number of equipment providers is needed. Controller logic for electrical-producing gas uses and digester type also is required.
- Improved separation processes need to be demonstrated at commercial-scale farms where operations are more complex.
- Challenges for the use of aeration processes for primary manure treatment today include high investment and operating costs (including energy) of treating waste streams aerobically. Aeration processes also increase the volume of residual solids depending on the operating conditions necessitating removal and additional management. Aeration may also volatilize 30%-90% of the nitrogen as N_2 or N_2O, which contribute to global warming and other environmental problems.

RD&D Activities

- EPA Region 9 is working with California to evaluate the feasibility of a centralized anaerobic project.
- USDA and DOE are currently funding research, development, and demonstration projects under the Biomass Research and Development Act of 2000. There are a number of projects focusing on technologies to generate energy from animal waste, convert biomass to hydrogen, and develop innovative biorefinery processes.

Recent Progress

- EPA's AgSTAR Program provides project development tools, performance evaluations, and general digester information. AgSTAR also collaborates with a number of state programs and various Farm Bill sections to expand the use of appropriate anaerobic digestion processes and gas uses. AgSTAR products and expertise have been used in the majority of animal waste digestion systems currently in operation.
- Currently, dairy manure handled as liquid and slurry is generally separated. Some dairies blend solids with other organic materials and market "brand" name compost materials for the nursery and home garden market.
- Aeration processes may be feasible for secondary or tertiary treatment of livestock waste, where greater pollution control is desirable – or to further reduce nitrogen availability for crop uptake.

Commercialization and Deployment Activities

- Currently, centralized digestion applications are being identified and some are in operation. The opportunities, however, may be limited because of farm distances and manure-handling practices. Biosecurity issues also may reduce the potential of this approach. Emerging gas-use technology development is limited for farm-scale anaerobic digesters because commercial applications have not been in operation long enough to make a performance determination by designers and vendors. However, applications at larger scales (such as landfill gas) will be relevant for centralized systems.
- There are several manufacturers and suppliers of mechanical separator equipment. USDA provides design guidance for gravity separators and technical resources to farms requesting assistance.
- A number of manufacturers and suppliers of aeration processes are available because it is used in municipal and industrial waste treatment. A number of low-rate aeration processes are emerging but have limited application because the dissolved oxygen requirements for microbial populations to oxidize organic matter are not met.

Market Context

- Cost-sharing and appropriate energy policies for independent power production could increase market penetration.

4.2.3 ADVANCED AGRICULTURAL SYSTEMS FOR ENTERIC EMISSIONS REDUCTION

Technology Description

Enteric emissions of methane from animals are a byproduct of digestion that are exhaled or eructated by the animals. It is a natural process, and the amount of methane is dependent on the animal's digestive system and the amount and type of feed consumed. Any reductions in this energy loss will increase nutritional efficiency – therefore the goal of much nutrition research has been to reduce this energy loss, while increasing production or nutritional efficiency. There are a number of strategies that can be used, including increased digestibility of forages and feeds; feeding grain rather than forages; providing feed additives that may tie up hydrogen in the rumen and inhibit the formation of methane by rumen bacteria; improving production efficiency; and modification of bacteria in the rumen. Many production practices are currently used that reduce methane; when used individually or in conjunction with each other, the practices may lower the loss of methane energy up to one half. These have not only global change benefits but may have significant economic benefits as well. Most system concepts for reducing methane emissions are, however, theoretical, and considerable research and development are required.

System Concepts

- High-grain diets: Feeding of high-grain diets to reduce methane emissions and increase animal production efficiency, without contributing to the animal health problems that are typically associated with high-grain diets.
- Ruminal fermentation time: Methane is released from the rumen where feed is fermented in an aerobic environment. The shorter the period of time feed remains in the rumen, the less carbon is converted to methane. Residence time in the rumen can be shortened by increasing the digestibility of feed grains or forages and by feeding of concentrated supplements.
- Alternate hydrogen acceptors: Addition of unsaturated edible oils in feed may be used to reduce methane emissions by sequestering hydrogen making it unavailable for methanogens.
- Use of feed additives: Ionophores are feed additives that inhibit the formation of methane by rumen bacteria. Considerable research is needed in maintenance of effectiveness for long periods and for delivery systems to grazing cattle.
- Improvement in production efficiency: Any practice that increases productivity per animal reduces methane emissions. Animal technologies that increase productivity include BST to increase milk production, growth regulators for beef cattle to enhance lean and reduce fat, genetic improvement of animal performance, genetic improvement of pasture and other feedstuffs potential, improved animal feed-handling practices, improved pasture nutritional and water management, and earlier marketing of animals.
- Enhancing ruminal acetogens: Acetogens are a group of rumen microbes that produce acetic acid from hydrogen and carbon dioxide rather than methane. They exist in the rumen as a minor species, predominate in the gut of some termites, and may be important in the lower gut of several animal species. Developing methods to make them more competitive in the rumen or transferring the acetogenesis genes to already successful ruminal organisms could be very helpful to animal efficiency and the environment.
- Modification of bacteria in the rumen: Alteration of ruminal microbes may lead to significant reduction in methane emissions; however, considerable research is needed to genetically produce microbes that can compete with natural microbes for sustained periods.

Representative Technologies

- Improved feed and forage management and treatment practices to increase the digestibility and reduce residence digestion time in the rumen, such as using improved feed grains and forage, increased surface area of the feeds, addition of fiber sources, treatment of the feeds/forages to increase digestibility, and appropriate use of concentrated supplements.
- Best-management practices for increased animal reproduction efficiency.
- Use of growth promotants and other agents to improve animal efficiency and enhance lean meat production.

Technology Status/Applications

- First-generation precision agriculture technologies are available and have been used on as many as 14% of farms by 1998.

- Rapid soil characterization sensors; selected forage stress, yield, and quality sensors; integration of global positioning systems to enhance selected needed areas of forage systems for enhanced selected management; and a systematic integration of all technologies for all major pasture and forage systems are not yet at technical performance levels required for field application.
- Strong understanding of animal physiology exists in the agriculture, energy, and university research areas.
- Research is required for the development of control-release materials and biological process inhibitors.
- Extensive use is made of animal and feed technologies in dairy- and beef-feeding systems; however, adequate techniques for uniform and effective delivery systems are needed in grazing systems.
- Best-management practices are in place in many production sectors.

Current Research, Development, and Demonstration

RD&D Goals

- Precision agriculture technologies that will improve forage and feedstuffs production efficiencies and increase digestibility.
- Remote and field-deployed sensors/monitors and information management systems for accurate, real-time monitoring and analysis of forage and crops, soils, water, fertilizer, and agricultural chemical use/efficiency to improve animal production efficiency.
- Smart materials for prescription release of feed additives under pasture or grazing systems.
- Genetic improvement of forages to increase productivity and digestibility.
- Methods of manipulating ruminal microbial processes to sequester hydrogen making it unavailable to methanogens.
- Deployment of first-generation integrated system models, technology and supporting education, and extension infrastructure.
- Genetically design forages to increase digestibility, reduce fertilizer requirements, provide chemicals for increased digestibility, and provide appropriate nutrients to enhance acetogen competitiveness.
- Genetically design bacteria that can compete with natural microbes for sustained periods.
- Full utilization of best-management practices.

RD&D Challenges

- Precision agriculture requires advances in rapid, low-cost, accurate plant, soil-nutrient, and physical property characterization; real-time crop and forage water requirements characterization; real-time crop and forage yield and quality characterization; real-time insect and pest infestation characterization; autonomous control systems; and integrated physiological model and comprehensive and user-friendly data/information-management systems.
- "Smart" materials that will release chemicals and feed additive doses under special conditions.
- Improved understanding of specific rumen microbial processes is required to support development of methods for making engineered microbes competitive with natural rumen microbes.
- Models that represent accurate understanding of the relationship of animal digestion and plant physiology must be coupled with models that represent soil-plant growth relationships. These models also must consider the changing global climate.
- Genetic engineering of sustainable competitive microbes that will produce acetic acid for the reduction of CO_2 with hydrogen.
- Development of plant varieties that increase nutrient-use efficiency while enhancing digestibility.
- Conduct direct basic and applied research effort on animal physiology, sensor development, material and feed additive research, and microbial processes research.

RD&D Activities

- The principal funding for this type research comes from the USDA and the animal-support industries. Others include the EPA, universities, state agencies, commodity groups, and instrumentation developers.

Recent Progress
• High-resolution satellite imagery can be used to identify water and nutrient stress and disease in some forage systems at 1-to-2 m resolution. • Success has been observed under grazing in the use of ionophores, which are widely used in the beef industry. • Control-release formulations for fertilizers and pesticides are in use, which improve forage productivity and digestibility. • Animal productivity per unit of methane emissions has steadily increased under managed conditions in the past 30 years. • On-farm use of yield-monitoring equipment is increasing. • Commercial sensors for sensitive, precise, and rapid analysis of greenhouse gases are in development and being marketed. • Best-management practices are in place for many crops and animal-management systems and regions of the country.
Commercialization and Deployment Activities
• Global-positioning systems, geographic information system software for parameter mapping, remotely sensed imagery, selected field monitors, and selected variable rate-control systems for seed, fertilizer, and chemical applications are commercialized and in application in the United States, Canada, Australia, and Europe. All of these systems may be used for increasing productivity and digestibility of forages. • Mitigated-release fertilizers and pesticides are available commercially. • Ionophores are widely used in the beef-feeding industry to increase productivity – but better delivery systems are needed. • Current precision agriculture technology is proven to be cost effective about 50% of the time, with poor reproducibility. • The infrastructure in place for agricultural production will support economical new technologies; however, the cost to compete with traditional technologies may initially be high until technology integration is complete.

4.3 EMISSIONS OF HIGH GLOBAL-WARMING POTENTIAL GASES

4.3.1 SEMICONDUCTOR INDUSTRY: ABATEMENT TECHNOLOGIES

Technology Description

Figure 1. Litmas Blue Plasma Abatement Device

Figure 2. Hitachi Catalytic Oxidation System

Semiconductor manufacturers perform plasma etching and cleaning processes that use gaseous chemicals including perfluorocarbons (e.g., CF_4, C_2F_6 and C_3F_8), nitrogen trifluoride (NF_3), HFC-23 (CHF_3), and sulfur hexafluoride (SF_6). Collectively termed high global-warming potential (GWP) gases, these chemicals are potent greenhouse gases; one metric ton of SF_6 is equivalent to 23,900 Mt of carbon dioxide in terms of its potential effect on global warming. In addition, many high GWP gases have extremely long lifetimes in the atmosphere (3,000-50,000 years). For the past 15 years, through international efforts to decrease ozone-depleting substances in the atmosphere, industry has been engaged in activities to reduce emissions and find alternatives.

One method of decreasing the emissions of high GWP gases from the semiconductor industry is to abate the emissions before they reach the atmosphere. Abatement of high GWP gases from the exhaust gas stream in semiconductor processing facilities may be achieved by two mechanisms: 1) thermal destruction and 2) plasma destruction. Thermal destruction technology may be applied to chamber-cleaning and etching processes within a fab (a local point-of-use [POU] application) or fab wide (an end-of-pipe [EOP] application). A POU device controls emissions as they emerge from an individual tool, while an EOP device is installed further "downstream," where it can abate emissions from a group of tools – or the entire fab – prior to the exhaust reaching the stack. Two thermal destruction technologies are being pursued: combustion systems and catalytic systems. In plasma-based systems, plasmas are formed from the effluent stream from etch or clean processes using either radio frequencies (low pressure streams) or microwaves (streams at atmospheric pressure). Destruction of high GWP gases that use plasmas offer system designers a broad range of conditions: oxidizing, reducing, and combinations of oxidizing and reducing conditions.

System Concepts

- In POU applications, thermal-destruction systems may be configured to accept exhaust from multiple etch/chemical vapor deposition chambers. High GWP emissions are oxidized in a natural gas-fired burner or over an electrically heated catalyst before the combustion products are removed by the on-site waste treatment systems.

- Burner and catalytic systems require pretreatment of inlet streams to reduce the loads of unused deposition/etchant gases and particles that can block burners or clog catalysts.
- Hydrofluoric acid formed in thermal destruction systems may be removed via POU scrubbers to prevent exceeding scrubber design limits.
- Plasma abatement technologies rely on the basic idea that larger exhaust molecules are broken into fragments in the plasma and then recombine in new ways, in the presence of other fragments formed from the dissociation of other gases added to the plasma, to form a new set of exhaust gases that may then be removed by existing waste-treatment systems.
- Plasma abatement systems for high GWP gases typically require very little floor space, because they are mounted off the floor directly on the foreline to the dry pump that feeds exhaust to scrubbing systems.

Representative Technologies

- The Edwards TPU 4214 (oxidation with advanced burner technology) is applicable for all high GWP emissions.
- The Hitachi system (catalytic oxidation technology) is applicable to CF_4, C_2F_6, c-C_4F_8, and SF_6.
- Investigators at Texas A&M patented an approach that used radio frequency and microwave surface wave plasmas. They now favor microwave technology that has proven more effective and holds the potential for exploiting low-cost magnetron technology.
- Litmas, Inc., has two systems. The first, "Blue," uses an inductively coupled radio frequency plasma source to transform high-GWP exhaust gases from etchers. The second technology from Litmas, "Red," transforms the exhausts from plasma-enhanced chemical vapor deposition chambers using microwaves.
- AMAT's Pegasys™ POU unit integrates cold-plasma abatement technology with popular etchers, which makes the abatement unit transparent to process engineers.

Current Research, Development, and Demonstration

RD&D Goals

- To lower high GWP emissions from waste streams by more than 99%, while minimizing (1) NO_x emissions to levels at or below emissions standards, (2) water use and burdens on industrial wastewater-treatment systems, (3) fabrication floor space, (4) unscheduled outages and (5) maintenance costs.
- To apply plasma technology to develop a cost-effective POU abatement device that lowers exhaust stream concentrations of high GWP gases by two to three orders of magnitude from etchers and plasma-enhanced chemical vapor deposition chambers; and transforms those gases into molecules that can be readily removed from air emissions using known scrubbing technologies.

RD&D Challenges

- Optimal combustion conditions to achieve destruction efficiencies for all high GWP gases, minimal energy consumption, and water use.
- In low-pressure applications, convincing skeptical process engineers that back-streaming from the plasma system does not threaten etch-process performance.
- Achieving more than 99% destruction efficiencies for all high GWP gases, particularly CF_4 and SF_6.
- Develop a cost-effective POU abatement device that lowers exhaust-stream concentrations of high GWP gases by two to three orders of magnitude, and transforms these gases into molecules that can be removed with current scrubbing technologies.

RD&D Activities

- Evaluations/reviews of approximately 13 thermal-destruction systems have been completed. Evaluations and demonstrations performed under fabrication operating conditions with Litmas and Texas A&M plasma systems produced favorable results.

Recent Progress

- The Edwards TPU 4214 (oxidation with advanced burner technology) achieves more than 99% destruction efficiency.
- The Hitachi system (catalytic oxidation technology) achieves destruction efficiencies of more than 99% for CF_4, C_2F_6, c-C_4F_8 and SF_6.

- Litmas, Inc., reports emission reductions from 97% to 99% for its "Blue" POU device.
- AMAT's capacitively coupled device (Pegasys II™) claims typically more than 95% reduction in emissions.
- Recent reports indicate that the surface wave device offers emissions reductions of more than 99% for a large range of tested waste streams.
- The Pegasys and Litmas radio frequency POU units appear affordable, with reasonable capital and operating costs, assuming that the existing hydrofluoric acid scrubber system (including ductwork) can handle the increase in hydrofluoric acid from these abatement units.
- The AMAT and Litmas radio frequency POU units have a small footprint, are easy to install, and are applicable to 200- and 300-mm etch tools.

Commercialization and Deployment Activities

- The Edwards TPU 4214 is the only thermal-destruction device in commercial use and represents a favored POU solution for chemical vapor deposition cleaning processes.
- AMAT's and Litmas' systems are commercially available and reported in use.
- AMAT's (Pegasys II™) interfaces with AMAT's 200 and 300mm dielectric oxide etchers.
- Litmas' "Blue" technology has successfully completed long-term impact tests on etch process performance.
- Litmas' "Red" technology reported by Litmas to be in use on plasma-enhanced chemical vapor deposition chambers.
- There are no reports of commercial application of the surface wave plasma device. Research continues at Texas A&M.

Market Context

- Thermal and plasma destruction technologies can have broad applicability across the semiconductor industry.

4.3.2 SEMICONDUCTOR INDUSTRY: SUBSTITUTES FOR HIGH GWP GASES

Technology Description

Semiconductor manufacturers perform plasma etching and cleaning processes that use gaseous chemicals including perfluorocarbons (e.g., CF_4, C_2F_6 and C_3F_8), nitrogen trifluoride (NF_3), HFC-23 (CHF_3), and sulfur hexafluoride (SF_6). Collectively termed high global-warming potential (GWP) gases, these chemicals are potent greenhouse gases; one metric ton of SF_6 is equivalent to 23,900 Mt of carbon dioxide in terms of its potential effect on global warming. In addition, many high GWP gases have extremely long lifetimes in the atmosphere (3,000-50,000 years). For the past 15 years, through international efforts to decrease ozone-depleting substances in the atmosphere, industry has been engaged in activities to reduce emissions and find alternatives. One method of decreasing the emissions of high GWP gases from the semiconductor industry is to substitute a different chemical or process for the high GWP gases. Replacing high GWP gases with environmentally benign substitutes for chemical vapor deposition clean and dielectric etch processes is a preferred option when viewed from the perspective of EPA's pollution prevention framework. Alternatives to the high GWP gases, such as SF_6, CF_4, C_3F_8, c-C_4F_8, and C_2F_6, are sought. To significantly lower emissions of high GWP gases, investigators seek gases that do not have high GWPs (and, if they do, are eliminated during the production process) and do not form byproducts with significant GWPs, particularly CF_4 and CHF_3. Important etch process performance criteria are etch rate, etch profile, etch selectivity, and control of the critical dimension. In this option, investigators seek alternative highly fluorinated compounds that either are not high GWP gases themselves or are highly utilized during plasma etching and do not form byproduct high GWP emissions.

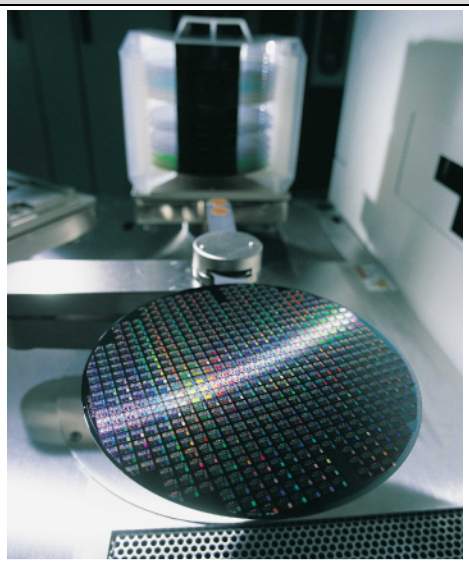

PFCs, HFCs, NF_3, and SF_6 are used to construct intricate semiconductor products on silicon wafers such as this one. (Reprinted with permission of Greenleaf Publishing.)

System Concepts

- Replacements are not favored if they increase cleaning times (which adversely affects fabrication productivity), form high GWP byproducts such as CF_4 and CHF_3, or pose new health and safety hazards.
- In dielectric etch processes, fluorine is required to etch the desired features into the dielectric materials, and carbon is required to passivate newly etched surfaces by gas formation of C_xF_y polymers that are then deposited to retard etching. Generally accepted models state that the boundary between net etching and deposition is a function of the fluorine:carbon ratio in the discharge. Plasmas rich in fluorine favor etching over deposition and those rich in carbon favor deposition over etching.

Representative Technologies

- Replacing C_2F_6 with C_4-compounds, e.g., switching to c-C_4F_8 and c-C_4F_8O
- Replacing C_2F_6 with NF_3 using in situ plasma cleaning.
- Replacing C_2F_6 with a remote fluorine source that dissociates NF_3 in an upstream plasma source.
- Replacing C_2F_6 with ClF_3.
- Hydrofluorocompounds, unsaturated fluorocompounds and iodofluorocompounds are attractive etch gas candidates because they have lower GWPs.
- C_3F_8 is a potential drop-in replacement for C_2F_6 in some chemical vapor deposition clean and etch processes because its high utilization during etch may offset its high GWP.
- Using NF_3, a high-GWP gas with high process utilization, in mixtures of a noble gas with unsaturated hydrocarbons of varying degrees. Examples of unsaturated hydrocarbons are ethyne or acetylene (C_2H_2), ethylene (C_2H_4), propyne (C_3H_4) and ethane (C_2H_6).

Current Research, Development, and Demonstration
RD&D Goals • To identify the *chemical* and *physical* mechanisms that govern chemical vapor deposition chamber cleaning and etching with perfluorocarbons and non-perfluorocarbons as well as govern process performance so that emissions of high GWP gases may be significantly reduced without either adversely affecting process productivity or increasing health and safety hazards. **RD&D Challenges** • Developing conceptual models that guide the identification of candidate substitutes and substitute classes. • Finding substitutes that do not form CF_4 (or other high-GWP gases such as CHF_3). • Finding substitutes that do not require costly process requalification. **RD&D Activities** • Evaluations at the Massachusetts Institute of Technology (MIT) simulated process conditions, and at semiconductor facilities (with participation of equipment manufacturers and gas suppliers) actual representative process conditions (AMD, Motorola, and Texas Instruments). • Discovery of the in situ dilute NF_3 cleaning process. • Development of the remote NF_3 cleaning process.
Recent Progress
• Use of C_3F_8 will reduce high GWP emissions, in terms of carbon dioxide equivalent, by 60% relative to the standard C_2F_6 process. • A switch to C_4 -fluorocarbons reduces emissions by 90% relative to the standard C_2F_6 process. • Industry familiarity with the use of fluorocarbon compounds, excellent process performance and chemical cost savings make these alternatives attractive options. c-C_4F_8 is already in widespread fabrication use for high-density plasma oxide etching, reducing the usual procedures for chemical and supplier qualification by the industry. • NF_3 dilute clean process reduces high GWP emissions by 85% relative to the standard C_2F_6 process. • Remote NF_3 cleaning process reduces high GWP emissions by more than 99% relative to standard C_2F_6 process.
Commercialization and Deployment Activities
• C_3F_8 is reported in commercial applications at fabricating facilities owned by AMD, Motorola, and Texas Instruments. • IBM and Novellus have commercialized and deployed dilute NF_3 cleaning processes. • AMAT and ASTeX have deployed remote NF_3 cleaning processes. • The etch gas research underway, and completed thus far, is described as proof-of-concept. There are no reports of commercial use. **Market Context** • Identification of a cost-effective PFC substitute could have wide applicability in the semiconductor industry.

4.3.3 SEMICONDUCTORS AND MAGNESIUM: RECOVERY AND RECYCLE

Technology Description

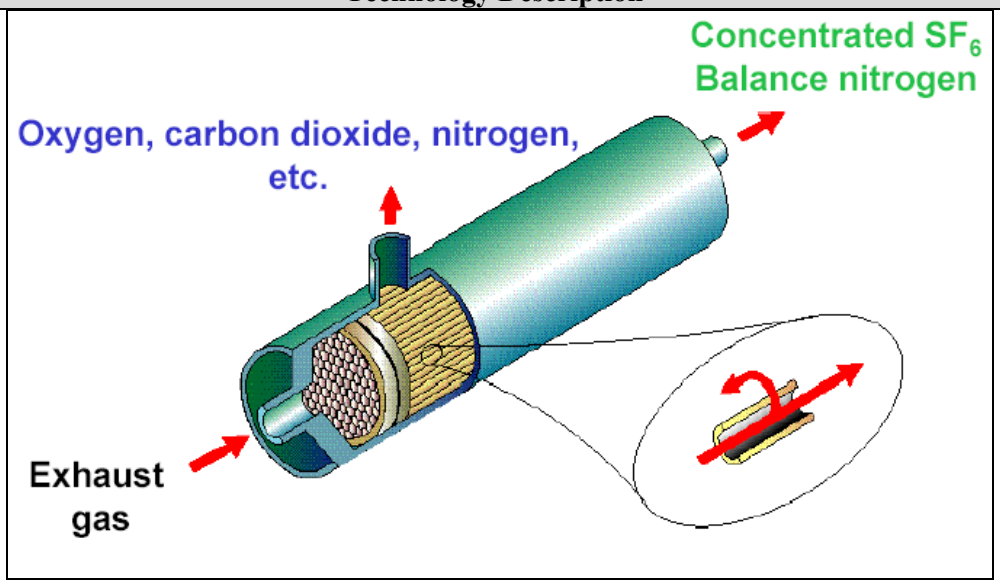

Figure 1. Diagram of Air Liquide's high GWP membrane separation technology.

The magnesium and semiconductor industries use and emit significant quantities of high global-warming potential (GWP) gases (e.g., SF_6, CF_4, C_2F_6 and C_3F_8). High GWP gases such as perfluorocarbons (PFCs) and SF_6 are potent greenhouse gases; one metric ton of PFCs is equivalent to 6,500-9,200 Mt of carbon dioxide in terms of its potential effect on global warming; SF_6 is the equivalent of 23,900 Mt of carbon dioxide. In addition, these compounds have extremely long lifetimes in the atmosphere (3,000-50,000 years). For the past 15 years, through international efforts to decrease ozone-depleting substances in the atmosphere, industry has been engaged in activities to reduce emissions and find alternatives.

One method of decreasing the emissions of high GWP gases from these industries is to recover and recycle these chemicals. Three recovery-and-recycle technologies are being investigated and evaluated: membrane separation, cryogenic capture, and pressure swing absorption.

System Concepts

- These technologies may be designed to treat exhaust streams from large magnesium firms and semiconductor processes.
- All recovery-and-recycle technologies require exhaust pretreatment to remove corrosives (such as hydrofluoric acid) and particles and moisture from the exhaust gas stream.
- The remaining PFCs and/or SF_6 are recovered, concentrated, and "bottled." On-site bottled PFCs may be either mixtures or highly purified. Captured SF_6 may be reused on-site for magnesium melt protection.

Representative Technologies

- Praxair/Ecosys and Edwards: cryogenic capture.
- Air Liquide and Air Products: membrane separation.
- MEGASORB and BOC: pressure swing.

Current Research, Development, and Demonstration

RD&D Goals

- To develop and demonstrate a cost-effective, universally applicable recovery-and-recycle technology (all fabrication facilities and all high GWP gases) that can yield "virgin"-grade high GWP gases for semiconductor fabrication or magnesium plant reuse or sufficiently pure high GWP gases for further use or purification elsewhere.

RD&D Challenges

- Development of a method for universal pretreatment.
- Capital and operating costs are high relative to other alternatives to reduce emissions, and only appear justifiable when recovery-and-recycle systems are applied to large portions of waste streams of large fabricating facilities or plants.
- As other high GWP emission-reducing technologies are considered and implemented, the viability of recovery-and-recycle systems and further investigation of those systems is reduced. This occurs because as high GWP gas concentrations in waste streams become lower, the technical challenges for separation and repurification increase as does the cost.

RD&D Activities

- Six systems have been tested at fabrication facilities, which demonstrated that cryogenic capture and membrane separation show promise.
- Air Liquide's membrane technology underwent an extended a successful evaluation at a U.S. primary magnesium producer – demonstrated 41% reduction in SF_6 emissions.
- DuPont is investigating the requirements for collecting, repurifying, and/or disposing of C_2F_6.

Recent Progress

- The Praxair/Ecoys (cryogenic capture) system has shown emission-reduction capabilities of up to 99% for C_2F_6, CHF_3, and SF_6, and up to 75% for CF_4.
- The Edwards (cryogenic capture) system has shown capture efficiencies that exceed 90%.
- Both the Air Liquide and the Air Products systems (membrane separation) have capture efficiencies of 96%-98% for C_2F_6, CF_4, and SF_6, when NF_3 and CHF_3 were first removed. Recovery efficiencies for NF_3 and CHF_3 varied between 30% and 60%, with CHF_3 being as low as about 30%.
- The MEGASORB and BOC systems (pressure swing) have shown low capture efficiencies, approximately 1% for the BOC system.

Commercialization and Deployment Activities

- Both cryogenic capture and membrane separation technologies have received encouraging press reports from chip manufacturers. However, there are no published reports of commercial use.
- Unpublished reports indicate that Intel is using Air Products' membrane separation technology in at least one fabricating facility.
- DuPont has expressed its intention to provide to the industry a disposition offering for recovered C_2F_6-containing mixture – an offer that includes repurification of C_2F_6 to virgin-grade specifications and, potentially if necessary, off-site destruction.

Market Context

- Recover-and-recycling technologies are only applicable for large facilities, such as large fabs, primary magnesium producers, or very large magnesium-casting companies.

4.3.4 ALUMINUM INDUSTRY: PERFLUOROCARBON EMISSIONS

Technology Description

Aluminum is produced through the electrolytic reduction of alumina (AL_2O_3). The electrolytic Hall-Héroult process was adopted in the late 19th century, and continues as the process in commercial use today. Producing aluminum by the conventional electrolytic cell process requires a large amount of energy and produces significant emissions of greenhouse gases. The Hall-Héroult process results in direct emissions of CO_2, due to the consumption of the carbon anode, and also perfluorocarbon emissions. Within the electrolytic bath, the alumina is dissolved in a mixture of molten cryolite (Na_3AlF) and aluminum fluoride (AlF_3). Perfluorocarbon emissions are formed as intermittent byproducts within the aluminum smelting pot as the result of operational disturbances called anode effects. Anode effects occur when there is an over-voltage disturbance of the smelting process and are triggered when alumina levels in the pot decline below a critical level. During these events, the fluorine from the cryolite bath reacts with the carbon anode to form tetrafluoromethane (CF_4) and hexafluoroethane (C_2F_6). Primary aluminum production is the largest source of emissions of perfluorocarbons in the United States. Greenhouse gas emission reduction measures not only reduce perfluorocarbon and other greenhouse gas emissions, but they also can improve process efficiency. The United States is one of the largest global producers of primary aluminum and, as of 2000, there were 11 U.S. companies that produced primary aluminum.

Primary aluminum production is the largest source of emissions of perfluorocarbons in the United States. Mitigation technologies and measures cannot only reduce emissions, but they also can improve process efficiency. (Reprinted with permission of Greenleaf Publishing.)

System Concepts

- Current efforts to reduce perfluorocarbon emissions from primary aluminum production focus on using the most efficient smelting processes to reduce the frequency and duration of anode effects. Perfluorocarbon reduction potential varies by smelter technology with point-feed technology the most efficient – and Søderberg technology the least efficient. Another concept, now in the research and development phase, involves replacing the carbon anode with an inert anode. Doing so would completely eliminate process-related perfluorocarbon and CO_2 emissions.

Representative Technologies

- Currently available perfluorocarbon mitigation technologies and practices include computerized controls and point-feeder systems, as well as improved operating practices that minimize the frequency and duration of anode effects and associated emissions. When using the Hall-Héroult process, perfluorocarbon emission reductions could be achieved through retrofitting existing cells, converting older technologies, and using advanced technologies. Emerging technologies include use of the inert anode mentioned above.

Technology Status/Application

- Computerized controls, point-feeder systems, and improved operator practices vary in their cost-effectiveness and ability to reduce emissions. Further research regarding anode effects could yield additional cost-effective emissions reductions. The Department of Energy, through its Industries of the Future strategy, supports research and development of the inert anode. Being noncarbon, the inert anode would eliminate PFC emissions. Laboratory, pilot-scale, and commercial-scale testing of inert anodes is currently underway.

A commercially viable design is expected by 2005. Commercialization can be expected by 2010-2015. Use of the inert anode technology will most likely be in conjunction with wetted cathode technology as part of an advanced technology cell. The advance technology cell is a combination of an inert anode, which would not be consumed during electrolysis, and a cathode with a stable surface, which would reduce electricity requirements.

Current Research, Development, and Demonstration

RD&D Goals

- If successful, the nonconsumable, inert anode technology would have clear advantages over conventional carbon anode technology, including energy efficiency increases, operating cost reductions, elimination of perfluorocarbon emissions, and productivity gains.

RD&D Challenges

- A number of critical technology barriers prevent the aluminum industry from the targets it has identified for inert anode technology. These challenges represent the difference between present-day carbon anode technology and the current state of nonconsumable anode technology. Challenges include:
  - Demonstration of "viable" inert materials for use in fabricating the anodes, including fabricating candidate materials in large sizes, and the means for scaling up the fabrication processes.
  - Basic knowledge of the operation of nonconsumable anodes.
  - Validation of the potential for full-scale process improvement.
  - Computer modeling to address retrofitting issues.

RD&D Activities

- DOE is leading the effort in producing inert anode technologies.

Recent Progress

- Use of the most efficient aluminum processing technologies, such as point-feed technology, has resulted in reducing perfluorocarbon emissions from U.S. primary aluminum production by more than 40% since 1990.

Commercialization and Deployment Activities

- High-efficiency smelting technologies (e.g., point-feed technology) and options for retrofitting the Hall-Héroult process are commercially available. A commercially viable inert anode design is not expected to be available until 2005.

Market Context

- Retrofit capability is a key issue with inert anode technology. If the new technology is technically and economically successful – but, ultimately, cannot be retrofitted to existing cells – it will still be considered a success. However, the ability to retrofit would be considered a major benefit, and would improve the technology's economics.

4.3.5 ELECTRIC POWER SYSTEMS AND MAGNESIUM: SUBSTITUTES FOR SF_6

Technology Description

Figure 1. Molten Mg with SF_6 cover gas.

Figure 2. Molten Mg without protective cover gas.

Electric Power Systems: Sulfur hexafluoride (SF_6) is a favored insulating agent for high-voltage electric power system equipment because of its dielectric strength and arc-suppression capabilities. Use of other insulating media has been researched and some have been used, especially in medium- and low-voltage applications. Historically, several other media were used (e.g., air, vacuum, oil) before the advent of SF_6, some of which remain in use today in certain applications.

Magnesium Industry: Magnesium metal producers and casters use SF_6 mixed with dry air and/or CO_2 as a cover gas to prevent oxidation and burning of the molten metal. About 5% to 20% of the SF_6 is believed to react with the metal surface, preventing oxidation, while the remainder escapes to the atmosphere. The magnesium casting machine operators need to have access to the surface of the magnesium melt. Therefore, a tightly sealed system is difficult to engineer and maintain. Recognizing that some gas will escape, a highly attractive technology option involves use of a gas other than SF_6 with better environmental characteristics. The challenge is to isolate a substitute with low or no global-warming potential that satisfies the magnesium industry's melt protection performance and safety requirements.

System Concepts

- Electric power systems: Purchase/use equipment that relies on insulating agents other than SF_6.
- Magnesium casting: Use a gas for magnesium melt protection that avoids the global-warming concerns associated with SF_6.

Representative Technologies

- Electric power systems: Existing insulating agents other than SF_6 include oil, air, or vacuum insulation; but SF_6 is the predominant choice for high-voltage applications. Despite extensive research efforts, no single gaseous compound has been isolated that serves as a substitute for SF_6 in high-voltage applications. SF_6 remains the insulating medium of choice. Gas mixtures, however, have been used successfully, including mixtures of SF_6/N_2 or SF_6/CF_4 in cold-weather applications.
- Magnesium casting:
  - HFC-134a: The Cooperative Research Centre for Cast Metals Manufacturing (CAST) in Australia is conducting research and development to find a suitable substitute gas for SF_6. Based on the concept that the addition of fluorine into the magnesium oxide surface film is the key mechanism for preventing oxidation of molten magnesium, CAST has developed a process that uses the hydrofluorocarbon gas 1,1,1,2-tetrafluoroethane, otherwise known as HFC-134a.

- SO_2: Sulfur dioxide provides effective protection of molten magnesium, but its toxicity presents a concern for use in the workplace.
- IMA Study / SINTEF: The International Magnesium Association (IMA) established an Ad Hoc Committee on SF_6 composed of representatives from IMA, several magnesium casting firms, and an automobile manufacturer. The committee selected a research proposal from SINTEF, the Foundation of Scientific and Industrial Research at the Norwegian University of Science and Technology, to evaluate alternative cover gases for protection of molten magnesium.
- Novec 612™: 3M™ has commercialized a fluorinated ketone, $C_3F_7C(O)C_2F_5$ (Novec 612™) as a substitute for SF_6.

Technology Status/Application

- Electric power systems: At least one utility is known to use SF_6/N_2 and SF_6/CF_4 gas mixtures for circuit breakers used in cold weather, at transmission and sub-transmission voltage levels (i.e., 500 kV and below).
- HFC-134a and Novec 612™ are reported to provide good molten metal protection in magnesium production and die-casting applications.

Current Research, Development, and Demonstration

RD&D Goals

- To find substitutes for SF_6 that have comparable insulating and arc quenching properties in high-voltage applications and/or protect molten magnesium – and significantly less or no global-warming potential.

RD&D Challenges

- Electric power systems: To date, no widely applicable alternatives have been found for SF_6. The primary RD&D challenge is to find an acceptable insulating medium for high-voltage applications.
- Magnesium casting:
  - Characterizing chemical and physical mechanisms that govern protection of molten magnesium through use of cover gas.
  - Selecting effective gas substitutes that not only guard against magnesium burning, but also minimize emissions of greenhouse gases or other pollutants of concern.
  - Isolating the best methods of gas distribution to overcome the potential disturbances associated with magnesium melt turbulence and temperature.

RD&D Activities

- EPA and the magnesium industry are working in a voluntary partnership to eliminate SF_6 emissions.
- Magnesium casting: SINTEF and CAST continue their work with alternative gases and HFC-134a. Based on their findings regarding the solubility of fluorine in molten magnesium, SINTEF is researching the viability of bubbling a fluorine-bearing gas through the melt or adding fluorine in a solid matrix, such as iron fluoride.
- The Electric Power Research Institute (EPRI) is investigating a solid-state current limiter that may lead to future equipment designs that do not require SF_6 insulation.

Recent Progress

- Electric power systems: Gas mixtures, as discussed above, have been used successfully in cold-weather applications.
- Magnesium producers and casting firms report promising results from early production-scale trials of alternative fluorinated cover gases.

Commercialization and Deployment Activities

- If a substitute gas is found, commercialization and deployment are not expected to represent hurdles. Gas mixtures appear to be readily available to potential users in cold regions where they are applicable.

Market Context

- Electric Power Systems: Circuit breaker equipment used in high-voltage electricity transmission and distribution.
- Magnesium Industry: All magnesium production and casting firms that use SF_6 for magnesium melt protection.

4.3.6 SUPERMARKET REFRIGERATION: HYDROFLUOROCARBON EMISSIONS

Technology Description

Distributed refrigeration technology can be seamlessly integrated into a store.

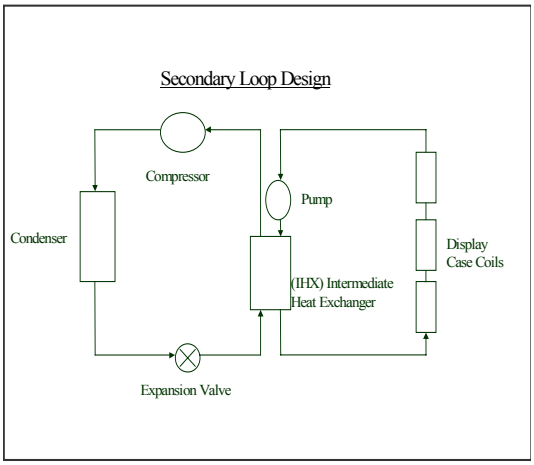

Secondary-Loop Refrigeration, where an extra pump and internal heat exchanger are added to the equipment used in a conventional design.

To comply with the U.S. Clean Air Act, supermarkets are phasing out the use of ozone-depleting refrigerants. As substitutes, the industry is using hydrofluorocarbons (HFCs), which are potent greenhouse gases. To ensure that food products are kept cold, the typical supermarket design pumps these HFC refrigerants through miles of piping and thousands of joints. Historically, annual emissions of 35% to 50% of the 2,000- to 4,000-pound charge have occurred. As old stores are replaced and new ones built, new technologies can drastically limit greenhouse gas emissions.

System Concepts

- Better equipment design and store layout can lead to a reduction in the amount of refrigerant needed for a given amount of product cooling.
- Additionally, replacing the complex miles of piping with either distributed cooling systems or a single centralized refrigeration plant can reduce the percent of refrigerant emitted annually.

Representative Technologies

- *Distributed Refrigeration* is a technology that puts refrigeration equipment closer to the food display cases, eliminating the need for excessive refrigerant piping throughout the store to reach a mechanical room sited away from the food.
- *Secondary-Loop Refrigeration* segregates refrigerant-containing equipment to a separate, centralized location, and uses a benign fluid to transfer heat from the food display cases.

Technology Status and Applications

- Both concepts have existed for some time but have seen very little adoption in the highly competitive, low-margin supermarket business.
- Only a handful of secondary-loop systems have been installed in the United States, primarily for "medium-temperature" (e.g., dairy products) portions of supermarkets. Very few "low-temperature" (e.g., frozen foods) systems exist in the world.
- Both technologies centralize refrigerants to one or a few locations. This allows for economical installation of leak-detection equipment to alert system operators when HFC refrigerant emissions occur.

Current Research, Development, and Demonstration

RD&D Goals and Challenges

- Continuously improve energy-use performance of these new technologies, investigating various designs, control strategies, and operational techniques.

- Investigate ways to reduce installation and operational costs of new technologies.
- Demonstrate applicability and advantages in various locations, store sizes, and product mixes.
- Educate store designers and builders regarding new technologies and how these technologies can be integrated into new or retrofitted stores at a net savings.

RD&D Activities

- EPA has built a facility to test secondary-loop refrigeration systems. Additional funding from DOE has been provided to support the research and test related products.
- Various manufacturers and supermarkets are conducting their own proprietary research on these technologies.

Recent Progress

- Existing systems have proved relatively easy to operate and maintain. Minimal refrigerant leakage has provided an economic benefit for the storeowner as well as an environmental benefit for society.
- Under the U.S./Australia Climate Action Partnership, the possibility of building and monitoring a typical and secondary-loop store is being explored. This will allow verification of potential benefits.

Commercialization and Deployment Activities

- The most opportune time to implement these technologies is during new store construction or during major overhaul and retrofit of existing stores. There are more than 30,000 supermarkets in the United States, and this is likely to grow with a growing population. Because many stores are currently switching from ozone-depleting refrigerants, there is a high potential to introduce these new technologies quickly if technical, economical, and educational challenges are met.

Market Context

- High competition in design and construction of supermarkets creates unwillingness to explore newer, unfamiliar technologies despite potential benefits.
- Low-margin business creates “chicken-and-egg” situation where supermarkets are unwilling to install new technologies until the benefits are proven, but benefits cannot be proven until supermarkets install new technologies.

4.4 NITROUS OXIDE EMISSIONS FROM COMBUSTION AND INDUSTRIAL SOURCES

4.4.1 NITROUS OXIDE ABATEMENT TECHNOLOGIES FOR NITRIC ACID PRODUCTION

Technology Description

Nitric acid (HNO_3) is an inorganic compound used primarily to make synthetic commercial fertilizer. As a raw material, it also is used for the production of adipic acid and explosives, metal etching, and in the processing of ferrous metals. Plants making adipic acid used to be high emitters of nitrous oxide (N_2O), but now that adipic acid plants in the United States have implemented nitrous oxide abatement technologies, nitric acid production itself is the largest industrial source of N_2O emissions. The nitric acid industry currently controls NO_x emissions using both nonselective catalytic reduction (nonselective catalytic reduction) and selective catalytic reduction (selective catalytic reduction) technologies to reduce N_2O to elemental nitrogen. While nonselective catalytic reduction is more effective than selective catalytic reduction at controlling N_2O, nonselective catalytic reduction units are not generally preferred in today's plants because of high-energy costs and associated high gas temperatures. Only 20% of nitric acid plants use nonselective catalytic reduction today. Additional research is needed to develop new catalysts that reduce N_2O with greater efficiency, and to improve nonselective catalytic reduction technology to make it a preferable alternative to selective catalytic reduction and other control options.

Nitric-acid plant controls for NO_x using both nonselective catalytic reduction and selective catalytic reduction technologies. Nonselective catalytic reduction is very effective at controlling N_2O.

System Concepts

- Nonselective catalytic reduction uses a fuel and a catalyst to consume free oxygen in the tail gas and convert NO_x to elemental nitrogen (Chartier, 1999). Nonselective catalytic reduction can reduce N_2O emissions by 80%-90%. (IPCC, 2000)

Representative Technologies

- The gas from the NO_x abatement is passed through a gas expander for energy recovery. Nonselective catalytic reduction units produce stack gases in the 1,000°F to 1,100°F range that require more exotic materials for constructing the expander and have higher maintenance costs.

Technology Status/Applications

- Virtually all of the nitric acid produced in the United States is manufactured by the catalytic oxidation of ammonia (EPA, 1991). During this reaction, N_2O is formed as a byproduct and is released from reactor vents to the atmosphere. While the waste gas stream may be cleaned of other pollutants – such as nitrogen dioxide – there are currently no control measures aimed at specifically eliminating N_2O emissions.

Current Research, Development, and Demonstration

RD&D Goals

- RD&D goals are focused on the catalysts used to convert NO_x into elemental nitrogen.

RD&D Challenges

- The use of a catalyst that can reduce a higher percentage of N_2O emissions is not the focus of the current research. The technology is primarily implemented in order to reduce NO_x emissions, not as an N_2O emission-reduction technology.
- Develop catalysts that reduce N_2O to elemental nitrogen with greater efficiency.

- Promote the use of nonselective catalytic reduction over other NO_x control options such as selective catalytic reduction and extended absorption.

RD&D Activities

- Information on R&D activities to develop new catalysts for nonselective catalytic reduction technologies is unavailable. To date, RD&D expenditures have been made by the industry. Estimates of future expenditures by the industry are not available.

Recent Progress

- Currently, the nitric acid industry controls for NO_x using both nonselective catalytic reduction and selective catalytic reduction technologies. Nonselective catalytic reduction is very effective at controlling N_2O, while selective catalytic reduction can actually increase N_2O emissions. Nonselective catalytic reduction units are generally not preferred in modern plants because of high energy costs and associated high gas temperatures. Only 20% of nitric acid plants use nonselective catalytic reduction.

Commercialization and Deployment Activities

- Nonselective catalytic reduction units were widely installed in nitric acid plants built between 1971 and 1977. It is estimated that approximately 20% of nitric acid plants use nonselective catalytic reduction (Choe, et al., 1993). Information on the status of the commercial development of nonselective catalytic reduction catalysts is not currently available, however.

Market Context

- Approximately 80% of current plants do not employ nonselective catalytic reduction, but instead use selective catalytic reduction or extended absorption units, neither of which are known to reduce N_2O emissions. Research is underway into materials for catalysts that are applicable for N_2O control in nitric acid plants that do not employ nonselective catalytic reduction. Nitrous oxide emissions from nitric acid production will be influenced by the degree and type of NO_x emission control efforts that are applied in both new and existing nitric acid plants.

4.4.2 NITROUS OXIDE ABATEMENT TECHNOLOGIES FOR TRANSPORTATION

Technology Description

Basic research is needed to understand the formation and magnitude of N_2O emissions from fuel combustion and catalytic-converter operation.

Nitrous oxide (N_2O) can be produced from fuel combustion and catalytic-converter operation in vehicles, primarily due to the nitrogen in the air. Little is understood about how much N_2O is produced by vehicles and under what conditions and with what catalytic-converter technology. The main research thrust in the near term is to begin to answer these basic questions.

In addition to direct emissions of N_2O, nitrogen oxide (NO_x) emissions from mobile and stationary sources have a significant impact on atmospheric N_2O levels. More than 25 million tons of NO_x is emitted annually in the United States. Following transport and chemical interactions, approximately 7 million tons of these nitrogen emissions are deposited downwind. This compares to about 11 million tons of nitrogen deposited from fertilizer application. Since the 11 million tons is reported to account for about 70% of anthropogenic N_2O emissions, the 7 million tons from atmospheric deposition appear to be significant. In the past, greenhouse gas emissions inventories have ignored the atmospheric nitrogen deposition due to uncertainties involved. Research is needed to define the contribution of NO_x emissions to nitrogen deposition and subsequent N_2O emissions, and to identify the global warming benefits from ongoing and future NO_x emissions control programs.

System Concepts

- Better understand the formation and magnitude of N_2O emissions from fuel combustion and catalytic-converter operation.
- Evaluate the climate-forcing potential atmospheric nitrogen deposition, especially from combustion sources.
- Develop emission models to assess the potential climate benefits from changes in emissions from nitrogen oxides.

Representative Technologies

- Combustion and post-combustion NO_x control technologies used in the tropospheric ozone control program.

Technology Status/Applications

- NO_x control technologies are in place due to the ozone and acid deposition programs.

Current Research, Development, and Demonstration

RD&D Goals

- Accurately understand the amount of N_2O produced in various vehicles, how it forms, and how it can be reduced.
- Develop N_2O measurement techniques for emerging gasoline and diesel engines and their emission-control systems. Measurement technology is needed for both laboratory and field measurement.
- Develop vehicle- and engine-testing programs to generate data about N_2O emissions for a variety of vehicles and engines equipped with a range of current and advanced emission-control technologies and operated over a range of real-world operating conditions.

• Research on the relationship of N_2O emissions to technologies and approaches that reduce fuel consumption by stationary and mobile combustion sources, including programs that reduce vehicle miles traveled. • Quantify the climate-forcing impacts due to NO_x emissions, nitrogen deposition, and N_2O emissions. **RD&D Challenges** • To establish linkages of NO_x emissions to climate-change impacts due to nitrogen deposition and enhance modeling capabilities to address these linkage issues.
Recent Progress
• EPA's ozone-control program has reduced emissions of NO_x.
Commercialization and Deployment Activities
• Additional NO_x emissions controls will be implemented in the future to meet ambient air quality standards for ozone and particulate matter.

4.5 EMISSIONS OF TROPOSPHERIC OZONE PRECURSORS AND BLACK CARBON

4.5.1 ABATEMENT TECHNOLOGIES FOR EMISSIONS OF TROPOSPHERIC OZONE PRECURSORS AND BLACK CARBON

Technology Description

(Above) Reflective roofing technology is an effective way to reduce temperatures in cities, leading to GHG reductions and tropospheric ozone concentrations, (Source: Sarnafil)

(Left) Available options to reduce open biomass burning include changing the frequency and conditions of prescribed burning and reducing open waste burning. (Photo: *National Geographic,* presented by T. Bond, 2002)

The role of black carbon (soot) and tropospheric ozone in global warming is still incompletely understood and additional research is needed to characterize emission sources, atmospheric interactions, and technological responses. It is likely that activities to reduce tropospheric ozone precursors and black carbon (BC) will have large public health and local air quality benefits, in addition to their role in mitigating climate change. Abatement technologies in this area include:

- *Transportation control technologies* - Tropospheric ozone and particulate matter (PM) emissions, of which BC is a component, resulting from motor U.S. vehicles have long been targeted because of their health and environmental consequences. Thus, vehicle manufacturers have developed increasingly effective control technologies to abate ozone precursors (especially nitrogen oxides or NO_x) and emissions of PM, in response to stricter engine and emission standards. Aside from emission controls, increasing fuel efficiency also reduces ozone precursors and BC.
- *Temperature reduction in cities* - Heat islands form as cities replace natural vegetation with pavement for roads, buildings, and other structures. There are several measures available to reduce the urban heat island effect that can decrease ambient air temperatures, energy use for cooling purposes, GHG emissions, and ozone concentrations. (Related information can be found in the technology profile "Urban Heat Island Technologies" under "Buildings").
- *Biomass burning* - Important sources of BC aerosols in the United States include combustion of not only fossil fuels but also biomass burning. Available options to reduce open biomass burning include changing the frequency and conditions of prescribed burning and reducing open waste burning.

System Concepts

- *Transportation control technologies* - For onroad and nonroad vehicles and equipment, future abatement technologies primarily involve sophisticated computer engine controls and treatment of exhaust emissions. Reduced fuel consumption and vehicle use also reduce ozone precursors and black carbon emissions.

- *Temperature reduction in cities* - Reduced temperatures reduce the need for summertime cooling energy, decrease biogenic volatile organic carbon emissions and evaporative losses from mobile and stationary sources, and reduce photochemical reaction rates, which may reduce ozone production.
- Assess the importance of *biomass burning*, including agricultural, open, and wild fires.

Representative Technologies

- *Transportation control technologies* include advanced tailpipe NO_x controls (including NO_x adsorbers), PM filters (traps) for diesel engines (including catalyzed traps capable of passive regeneration), and hybrid and fuel cell vehicles.
- Representative technologies for *temperature reduction in cities* include:
  - Strategically planted shade trees
  - Reflective roofs: There are over 200 Energy Star™ roof products, including coatings and single-ply materials, tiles, shingles and membranes. Energy savings with reflective roofs range as high as 32% during peak demand (summer average of 15%).
  - Reflective paving materials: There are several reflective pavement applications being developed, including new pavement and resurfacing applications, asphalt, concrete and other material types. Whitetopping is becoming increasingly popular.
- Alternatives to *biomass burning* include prescribed burning programs (which are directed at minimizing wildfires), and regulation or banning of open burning (such as in land clearing).

Technology Status/Applications

- *Transportation control technologies* - Heavy-duty diesel engine manufacturers are pursuing advanced NO_x controls and particulate matter filters to meet stringent 2004 and 2007 emission standards, and hybrid and fuel cell alternatives are under development.
- Technology status for *temperature reduction in cities*
  - Shade Trees - Nationally, there are numerous tree-planting programs. Some utilities have partnered with urban forestry groups to encourage residential shade tree planting to reduce energy consumption from air conditioning. Further, several communities have implemented shade tree ordinances.
  - Reflective Roofs - A few states (e.g., Georgia and Florida) have incorporated reflective roofs into their state energy codes. Some states (e.g., California) and communities have reflective roof incentive programs. Reflective roofs are given credit in several environmental rating programs including the U.S. Green Building Council's LEED (Leadership in Energy and Environment) rating system.
  - Reflective Pavements - Some communities are installing alternative pavement parking lots and alleys – mainly using porous pavement technologies. Whitetopping is also becoming increasingly popular.

Current Research, Development, and Demonstration

RD&D Goals

- *Transportation technologies* - Cost-effective NO_x and black carbon engine and vehicle controls, especially for diesel engines.
- *Temperature reduction in cities* - Understand and quantify the impacts that heat island reduction measures have on local meteorology, energy use, GHG emissions, and air quality; develop an application, based on geographic information systems, that predicts heat island outcomes from different development scenarios.
- *Basic research* is needed to better understand black carbon's role in climate change including establishing linkages between air pollution and climate change by enhancing modeling capabilities; designing integrated emissions control strategies to benefit climate, regional and local air quality simultaneously.

RD&D Challenges

- *Temperature reduction in cities* - The interaction between meteorological, land surface, and emission-specific parameters are not fully understood.
- *Biomass burning* - To design integrated emissions control strategies to benefit global climate and regional and local air quality simultaneously and improve current wildfire research to be address black carbon.

RD&D Activities

- Better understanding of the role of ozone and black carbon in climate change

- *Transportation control technologies* - Transfer of onroad diesel emission control technology to nonroad applications; development of in-use emission measurement techniques; gasoline vehicle particulate matter (inc. black carbon) characterization; develop retrofit emission control technology, and develop understanding of role of reducing fuel consumption and vehicle use on non-CO_2 GHGs.
- *Transportation control technologies* - Current focus of industry and EPA research is on developing and demonstrating effective, compact, and durable advanced NO_x and particulate matter control systems.
- *Temperature reduction in cities* - Tulane University and Lawrence Berkeley National Lab (LBNL) are modeling the impacts of heat island reduction measures on local meteorology in seven U.S. domains; LBNL is analyzing the urban fabric (surface composition) in several cities; and several groups in California are examining net benefits from trees.

Recent Progress

- *Transportation control technologies* - In 2000, stringent passenger car/light truck/sport utility vehicle standards were established to result in historically low levels of per-vehicle emissions of NO_x beginning in 2004. In 2001, stringent heavy truck and bus standards are resulting in creative technological approaches to difficult NO_x and particulate matter standards.
- *Biomass burning* - EPA began monitoring of black carbon as part of the IMPROVE network in 1988 (110 monitoring sites). EPA also developed new source performance standards for residential wood heaters (promoting complete combustion and reducing particulate emissions). Open burning (including land clearing) in many parts of the country has been regulated or banned in order to minimize emissions and help achieve national ambient air quality standards for particulate matter and ozone.

Commercialization and Deployment Activities

- *Transportation control technologies* - All new passenger cars, light trucks, and sport utility vehicles will have highly sophisticated emission controls after 2004. Manufacturers of heavy-duty engines have significant demonstration experience with particulate filter technologies, especially on urban buses.
- *Temperature reduction in cities* - Reflective roofing and paving technologies may be broadly applicable to U.S. cities, but benefits will vary. In addition, several reflective roof programs (e.g., California's Cool Savings Program) require use of Energy Star™ Roof Products.