# The AC PV Building Block-
# Ultimate Plug-n-Play That Brings Photovoltaics Directly to the Customer*

**Ward Bower**
Sandia National Laboratories; MS0753
Albuquerque, NM 87185-0753
Phone: 505-844-5206
Fax: 505-844-6541
**email: wibower@sandia.gov**

## ABSTRACT

A new concept known as the "AC Photovoltaic Building Block" can revolutionize the photovoltaic industry by offering the ultimate plug-n-play product directly to the customer. The AC PV Building Block modules are fully integrated with mounting frames or rails also serving as approved electrical conduit, inverter housing, interconnect buses, and safety devices to become a plug and play system. Goals for the proposed new concept are to reduce balance-of-systems (BOS) costs by at least 50% and improve reliability and ease of installation. The success of the project relies on: (1) **mass**-production of **quality** products using the **latest** technology; and (2) **all** of the elements and components integrated together into a **rugged**, **reliable** and **proven** package. The fully packaged nature of the concept brings photovoltaics directly to market by eliminating many design, installation, and purchasing headaches.

### 1. Introduction

Today's photovoltaic power system is generally comprised of a single photovoltaic module or in most cases multiple modules that are connected in combinations of series and parallel circuits as a photovoltaic array. In the case of the single module system, the photovoltaic module is connected to the inverter or load through a junction box that incorporates a fuse to protect the photovoltaic module if backfeeding from other sources such as from a utility or a battery is possible. The photovoltaic modules used in these systems are configured either with or without a frame. For conventional systems that use multiple modules or laminates they are interconnected via junction boxes or flying leads and external wiring and connectors that must be rated sunlight resistant and rated to handle the system currents. Some conventional photovoltaic system installations require that the dc and ac wiring be installed in properly sized and anchored conduit or cable trays.

The AC PV Building Block integrated assembly can be constructed such that all types and shapes of photovoltaic modules can be utilized, but differ from commercialized ac modules [1,2,3]. The AC PV Building Block units generally can be arranged into any size and/or shape of photovoltaic subsystem or system that can provide ac power to any of the existing loads including:

- ✓ The utility grid,
- ✓ Mini-grids utilizing other sources of ac electrical generation often referred to hybrid systems, or
- ✓ Stand-alone power systems that typically use electrical energy storage **and** an inverter to supply ac power to off-grid loads.

Photovoltaic modules are typically products with a long life of twenty years and more. The components that are used in the AC PV Building Block must have comparable lifetimes and reliability. All components need to be designed to use mass-production technologies by skilled manufacturing facilities. The use of manufacturing facilities producing synergistic products, such as lighting ballasts, automotive components or small power supplies, can greatly accelerate the commercialization of the AC PV Building Block by providing a head-start with in-place facilities, manufacturing expertise and packaging experience.

The development of the AC PV Building Block concept can be accelerated through the transfer of critical expertise that is available from similar engineering programs within Sandia National Laboratories and related industry. The development of innovative, extremely rugged and reliable components, corrosion-resistant interconnects, electronic packaging, material compatibility, and thermal management is already underway at Sandia. Much of this knowledge and experience is transferable to the development of the AC PV Building Block concept. The expertise for balance-of-plant integration that is compatible with requirements for listing for safety, utility interconnection, and *National Electrical Code*® compliance is also in place at Sandia.

Low cost and high reliability, two critical elements of the AC PV Building Block design, but not often used in the same sentence, are key challenges requiring innovative engineering. For instance, electrolytic capacitors that are always used in today's inverters must be eliminated in the micro inverter design for the AC PV Building Block. Surge protection must be included, but should not require replacement after it is exercised except in extreme cases such as direct lightning strikes. Materials used in interconnects must be corrosion resistant and may use the thermal environment typically seen by photovoltaic modules to maintain good, low resistance connections. Materials

*This work is supported by the U.S. DOE under contract to Sandia National Laboratories, a multiprogram laboratory operated by Sandia Corporation, a Lockheed Martin Company, for the United States Department of Energy under Contract DE-AC04-94AL85000.

used in the frame or rail members must be robust, sunlight resistant and corrosion resistant.

## 2. Advantages of the Building Block Concept

The AC PV Building Block offers numerous advantages related to installation, orientation, using different module technologies, aging, shadowing, breakage and failures. The nature of paralleling (summing) the output of multiple modules provides built-in redundancy, where failure or breakage of a single module only reduces the total output by the equivalent of one AC PV Building Block. Similarly, shadowing by trees, chimneys and vent pipes reduces the output only by the number of AC PV Building Blocks affected. The nature of the outputs allows multiple module technologies to be used and aging or degradation of one module affects only its output, and does not create maximum power point tracking problems for the entire system or reduce operating windows of the system to a level where a central inverter no longer can function.

### *Simplicity and Elimination of All DC Issues*

The AC PV Building Block concept results in a fully integrated design and package that eliminates the following dc-elements or issues associated with interconnecting conventional photovoltaic power systems.

1. DC wiring and associated holders, cable trays, conduit and the like;
2. DC disconnects and associated housings;
3. DC fusing, overcurrent protection and required holders;
4. DC connectors;
5. DC ground-fault detection, protection and devices;
6. DC surge protection;
7. DC combiner boxes;
8. DC junction boxes and connector blocks;
9. "Series or blocking diodes" associated with today's photovoltaic modules or array;
10. Most, if not all photovoltaic module bypass diodes;

Figure 1 illustrates how the dc wiring often becomes cumbersome and expensive in today's conventional photovoltaic system. The wires, terminals and disconnects are large and expensive.

### *AC-Side Improvements*

Advantages on the ac-side of photovoltaic installations using the AC PV Building Block include cost reductions, simplified installation and redundancies that improve system availability. The cost reductions come primarily from a reduction of or replacement of typical hardware including:

1. No separate inverter housing is needed;
2. Frames and/or rails double as mounting members;
3. Conduit for ac wiring is reduced or eliminated (especially critical in building-integrated applications);
4. AC J-boxes are minimized since many ac connections are contained within the frames or rails;
5. Output interconnect is part of the system design

Figure 1. View of inverters (left), DC panel (right), large DC cables and junction boxes (center) used to connect the PV array to the inverter in a conventional installation.

## 3. AC PV Building Block Construction

A miniaturized dc to ac conversion device (inverter) included as part of the building block will be an integral part of a replaceable element hereafter called the "Power Bar" or "Power Rail" that also has integrated connections to an ac bus bar through which multiple building blocks can be combined. The "Power Bar" to "Interconnect Bar", and "Power Rail" to "Interconnect Rail" mechanical assembly will maintain required electrical bonding, provide double insulation properties, and weather resistance. The dc-ac conversion device may be replaceable, but the high reliability goal will eliminate the need for field repairs. The concept uses a fully integrated mounting structure that serves both as a mechanical assembly, the dc connection to the photovoltaic modules, the electronic dc to ac conversion, surge protection, communications bus and ac power distribution element. Photovoltaic modules used in the package will be modified slightly to accommodate the integrated dc connections and specialized frames or rails.

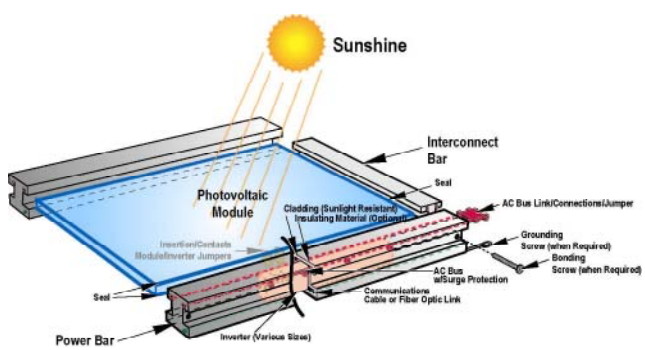


Figure 2. Concept Drawing of an AC BV Building Block

### *Modular Construction*

The final AC PV Building Block assembly can snap together or can simple mechanical construction using

screws, bolts, nuts and the like, resulting in an environmentally sound (weather, humidity, thermal and sunlight resistant) assembly suitable for rooftop and building integrated photovoltaic applications. Figure 2 shows the construction of a representative "AC PV Building Block" unit.

### *Ease of Installation*

The AC PV Building Block paves the way to ease practitioner, designer and installer certification requirements and better guarantees code compliant installations and building integration of photovoltaic technologies [4]. The final assembly can be constructed to meet the double-insulation requirements used in several European countries. The AC PV Building Block dc system can be ungrounded or grounded but the ungrounded configuration can improve cost and reliability [5]. The ungrounded dc option is already code compliant in the United States when an enclosed assembly such as the AC PB Building Block is listed as a unit.

### *Applications for the AC PV Building Block*

The output voltage and frequency of the AC PV Building Block will be different depending upon the country standards and the connection requirements. Two basic inverter designs are expected to provide all of the worldwide options. Figure 3 shows the most common application for residential applications where the AC PV Building Block will be used. In the United States, most residential dwellings are wired with 240V, 60Hz power. The 240V is center-tapped to provide what is referred to as two-phase power. Most household circuits are single-phase, 120V in the United States, and are connected on either side of the center tap to help balance the load. The AC PV Building Block can have the option of providing power at 120V or 240V, but the 120V with one terminal connected to the neutral conductor (grounded) in the house is expected to be dominant.

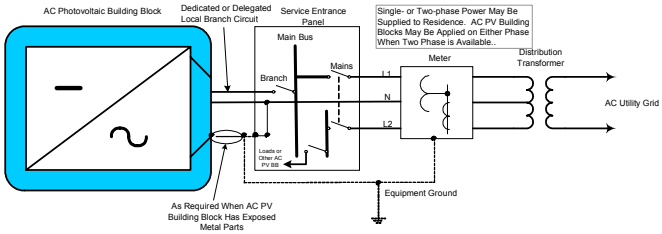


Figure 3. A Common Residential AC PV Building Block Configuration in the United States.

All exposed metal parts, when used on the "Power Bar", "Interconnect Bar", "Power Rail" or "Interconnect Bar", are connected to the equipment ground circuit as required by all domestic and international installation codes. A dedicated branch circuit is where the AC PV Building Block, or a specified number of AC PB Building Blocks is connected to the ac grid. The *National Electrical Code* in the USA requires this dedicated branch circuit. Other countries typically require a similar dedicated branch circuit. Some countries such as the Netherlands allow interconnection to existing circuits if the outputs of the total number of interconnected AC PB Building Blocks do not exceed a specified limit for the circuit and if that circuit is located in non-insulated walls.

The AC PV Building Block Concept is not just for utility-interactive applications. It can easily be connected to a stand-alone system that uses another inverter or even a rotating source of ac power. One advantage of using the photovoltaic energy immediately rather than going through a charge/discharge cycle or a charge controller is improved overall efficiency. The AC PV Building Block could supply energy directly to the loads reducing battery cycling or fuel consumption. Alternatively the AC PV Building Block may provide battery charging through a commercially available battery charger.

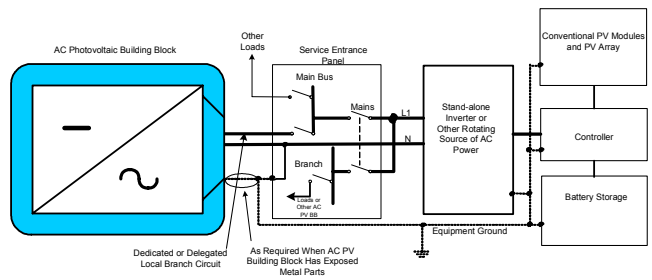


Figure 4. The AC PV Building Block in a Residential Stand-alone Configuration.

The AC PV Building Block can also interface easily with three-phase power. This is a nice advantage for some European applications were three-phase power is supplied to homes. Figure 5 illustrates one method to connect AC PV Building Blocks to a three-phase utility.

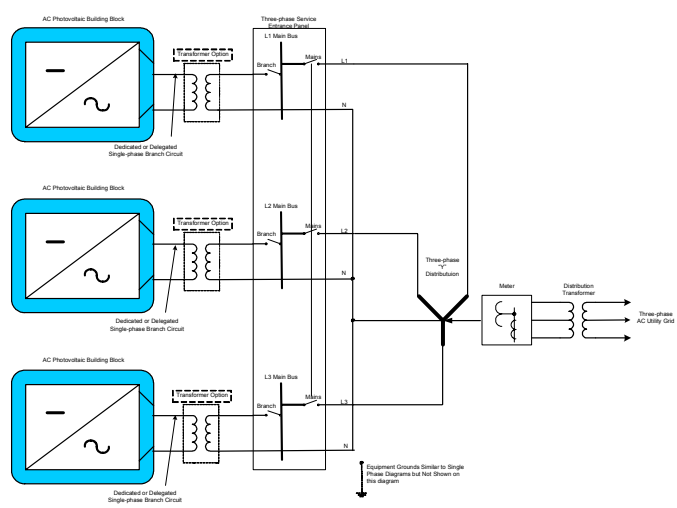


Figure 5. Interconnect diagram for a commercial or residential application where multiple inverters are each connected to a single phase of the three-phase distribution.

A three-phase inverter design for a direct three-phase connection offers major advantages because the filtering requirements on the dc side essentially reduce to zero. That is, no large electrolytic capacitor bank is needed. Electrolytic capacitors are one of the shortest-lifetime components used in inverters today.

It is not expected that the AC PV Building Block will replace conventional systems in all applications. Three-phase power is generally associated with larger applications, and although the AC PV Building Block provides redundancy, and better system availability in larger systems, it is likely commercial and utility scale applications will continue to use large inverters and conventional wiring methods for the dc side of the system.

## 4. Preliminary AC PV Building Block Designs

Preliminary designs for the micro inverter have provided very encouraging estimations on the size, costs and mechanical constraints to be expected. Even with the encouraging estimates, there is still much to be done to ensure high reliability, good performance and low cost building blocks that must endure the very hostile rooftop environment.

### *Mechanical*

It has been estimated that an inverter rated at 100W could be designed to be nestled within a frame or rail and require no special attention to thermal management. One size estimate for the 100W micro-inverter package is approximately 16" X 1 ¾" X 1 ¼". The same package could contain a 200W inverter but requires thermal management through innovative packaging and cooling. Options for additional thermal management include power fold back with temperature or selected redundancy in the form of supplementary power circuits to better distribute the heat. Packaging to include three-dimensional thermal management or distributed circuit layouts are viable options. Some of the thermal management will be designed to direct the heat away from the PV module and seals.

### *Micro Inverter Topology*

The nature of the AC PV Building Block allows the use of innovative inverter topologies that also do not require the use of electrolytic capacitors. It has been modeled and shown that the new topologies will be very efficient (>94%) including all the losses presented by control circuits and communications for each of the building block inverters. Communications for each of the units will be needed, but simplified and low cost methods are essential and are being planned. It has not been determined if the communication should be part of the inverter or offered as an option.

### *Costs*

The first cost estimates are very encouraging. The nature of the concept eliminates the need for an inverter housing since the combination of the frame or rail serve as dc interconnect, inverter housing, conduit, ac bus and provide for integrated surge protection to be placed where it can do the most good. The inverter construction costs have been estimated to range from $0.24 to $0.35 per watt in quantities of 1000. The ac link that provides reduced cost jumpers for interconnecting a number of AC PV Building Blocks will be lower cost than commercially available connectors or J-boxes used today. Since the ac links handle only ac, the design, material compatibility, corrosion issues and costs are reduced.

## 5. Summary

The AC PV Building Block will be a fundamental element upon which all types of photovoltaic systems can be built. The concept uses a fully integrated mounting frame or rail that serves as a mechanical assembly, the dc connection to the photovoltaic modules, the electronic dc to ac conversion and power distribution element. The AC PV Building Block assembly can be constructed in a manner in which all types and shapes of photovoltaic modules can be utilized. Other advantages of the concept include the replacement, substitution, or integration of individual photovoltaic system balance-of-system elements including, but not limited to, inverter housings, junction blocks, junction boxes, individual connectors, surge protection, communication circuits and cables, conduit, photovoltaic module mounting options, photovoltaic module application options, and most wiring within the photovoltaic systems.

## 6. References

[1] Kern, G.A., "Interconnect Guidelines and Status of AC PV Modules in the United States," Proceedings of the IEA PVPS Task V Workshop on Utility Interconnection of PV Systems, Zurich, Switzerland, Sep 15-16, 1997.

[2] Odenkamp, H., deJong I., Baltus, C., Verhoeven, S., Elstgeest, S., "Reliability and Accelerated Life Tests of the AC Module-mounted OKE4 Inverter," Proceedings of the 25th IEEE Photovoltaic Specialists Conference, Washington, DC, May 13-17, 1996.

[3] Strong, S., Wohlgemuth, J., Kaelin, M., Development of Standardized Low-cost AC PV Systems: Phase I Annual Report, A PVMaT contractors report by Solar Design Associates, Solarex and Advanced Energy Systems, NREL/SR-520-23002, Golden, CO, Jun 1997.

[4] Objectives and Task Analysis for the Solar Photovoltaic System Installer, North American Board of Certified Energy Practitioners' Technical Committee Document, Available at www.nabcep.org.

[5] Bower, W., Wiles, J., "Analysis of Grounded and Ungrounded Photovoltaic Systems," Proceedings of the 1st World Conference on Photovoltaic Energy Conversion, Waikoloa, HI, Dec 5-9, 1994.