United States Patent [19]

Ciszek

[11] **Patent Number: 4,650,541**

[45] **Date of Patent: Mar. 17, 1987**

[54] **APPARATUS AND METHOD FOR THE HORIZONTAL, CRUCIBLE-FREE GROWTH OF SILICON SHEET CRYSTALS**

[75] Inventor: **Theodore F. Ciszek**, Evergreen, Colo.

[73] Assignee: **The United States of America as represented by the United States Department of Energy**, Washington, D.C.

[21] Appl. No.: **649,627**

[22] Filed: **Sep. 12, 1984**

[51] **Int. Cl.**[4] **C30B 15/06**

[52] **U.S. Cl.** **156/620**; 156/DIG. 64; 156/DIG. 88; 156/DIG. 97; 422/249

[58] **Field of Search** ..... 156/608, 617 SP, 617 V, 156/617 M, 617 H, 619, 620, DIG. 64, DIG. 88, DIG. 97; 422/249

[56] **References Cited**

U.S. PATENT DOCUMENTS

4,226,834 10/1980 Shudo et al. 156/DIG. 97
4,329,195 5/1982 Kudo 156/DIG. 97

FOREIGN PATENT DOCUMENTS

674121 11/1963 Canada 156/DIG. 64
52-62185 5/1977 Japan ..... 156/617 H

OTHER PUBLICATIONS

Bleil; A New Method for Growing Crystal Ribbons; J. of Crystal Growth, 5(1969) 99–104.
Kudo; Improvements in the Horizontal Growth Technique for Single Crystal Silicon; J. of Crystal Growth 50, pp. 247–259 (1980).
Jewett et al; Progress in Growth of Silicon Ribbon by a Low Angle, High Rate Process; 17th IEEE Photovoltaic Specialist Conference, IEEE Press, pp. 86–89 (1982).

Primary Examiner—Barry S. Richman
Assistant Examiner—Michael S. Gzybowski
Attorney, Agent, or Firm—Kenneth L. Richardson; John M. Albrecht; Judson R. Hightower

[57] **ABSTRACT**

Apparatus for continuously forming a silicon crystal sheet from a silicon rod in a noncrucible environment. The rod is rotated and fed toward an RF coil in an inert atmosphere so that the upper end of the rod becomes molten and the silicon sheet crystal is pulled therefrom substantially horizontally in a continuous strip. A shorting ring may be provided around the rod to limit the heating to the upper end only. Argon gas can be used to create the inert atmosphere within a suitable closed chamber. By use of this apparatus and method, a substantially defect-free silicon crystal sheet is formed that can be used for microcircuitry chips or solar cells.

13 Claims, 8 Drawing Figures

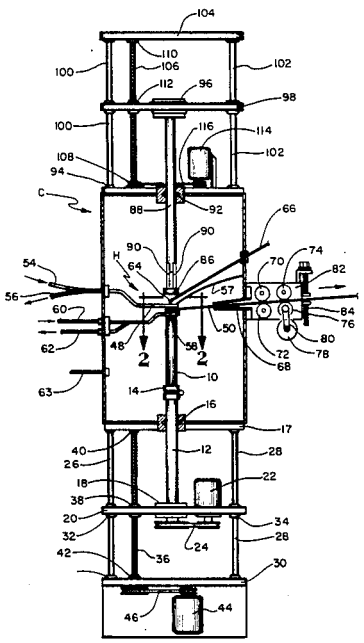

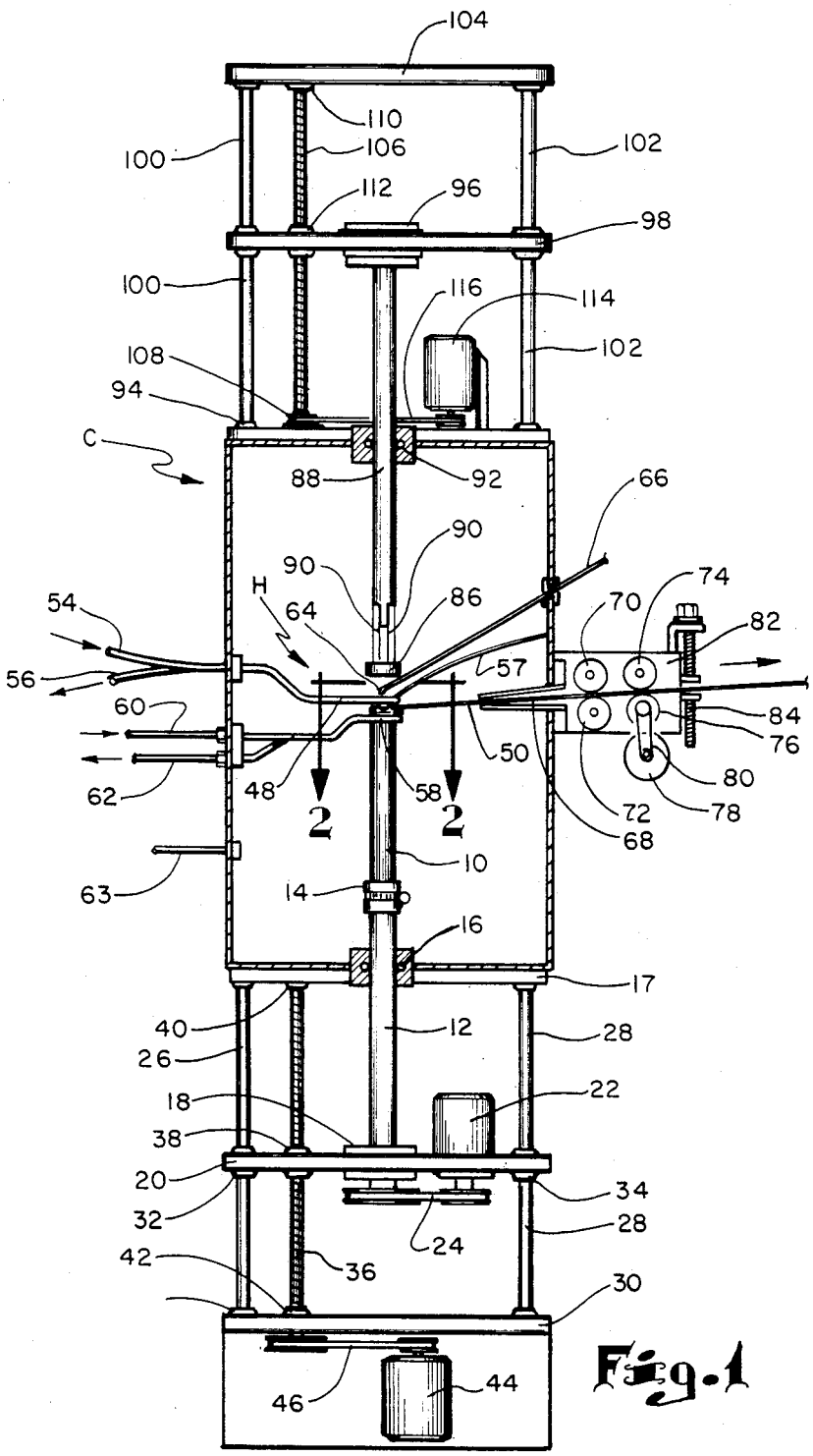
104
110
106
100
102
112
96
98
100
116
114
102
108
94
C
88
92
66
90
90
H
64
86
74
70
82
54
57
56
60
84
76
50
80
62
48
58
2
2
72
78
68
10
63
14
16
17
40
12
28
26
22
18
38
20
34
32
28
24
42
36
30
46
44

Fig. 1

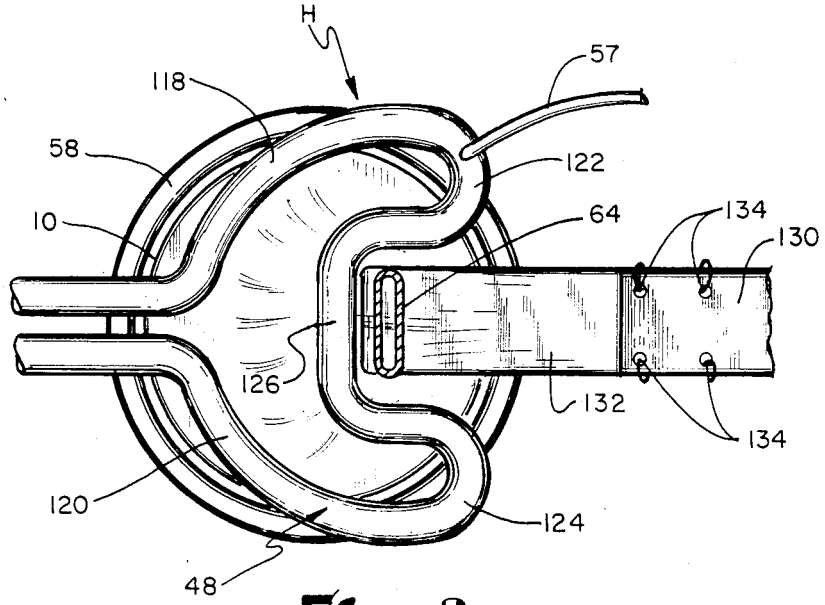
H
57
118
58
122
10
64
134
130
126
132
134
120
124
48

Fig. 2

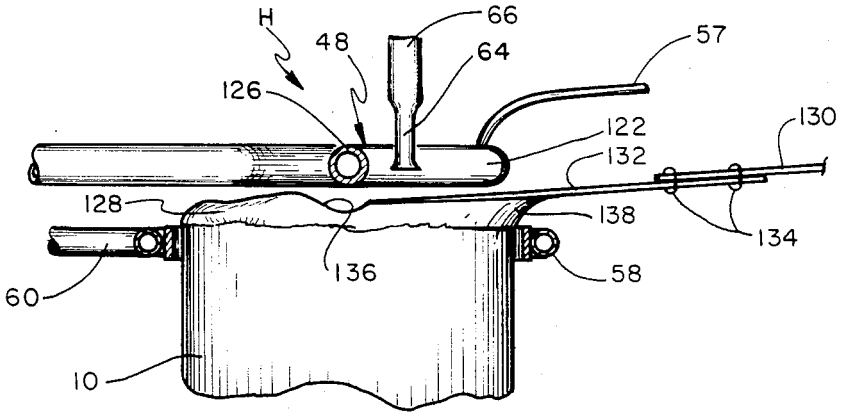
H
66
48
64
57
126
122
130
132
128
138
134
136
58
60
10

Fig. 3

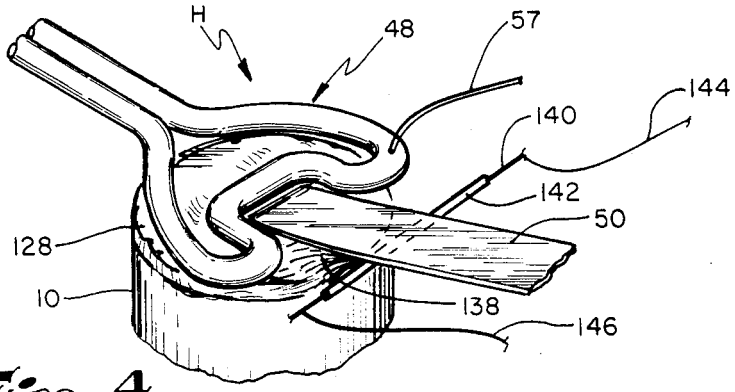

Fig. 4

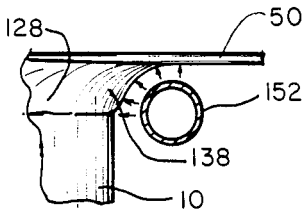

Fig. 7

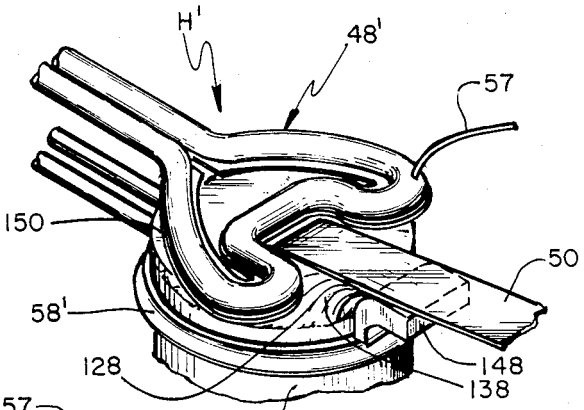

Fig. 5

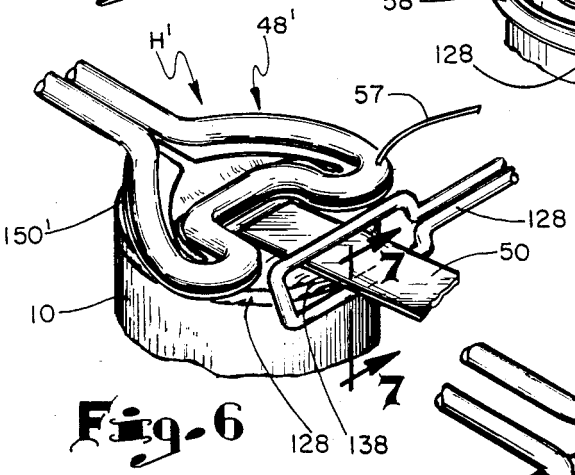

Fig. 6

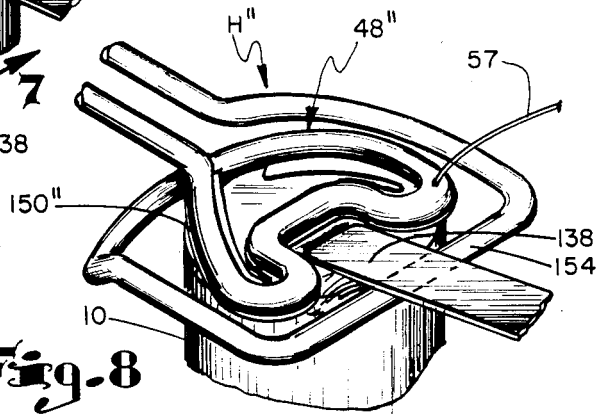

Fig. 8

APPARATUS AND METHOD FOR THE HORIZONTAL, CRUCIBLE-FREE GROWTH OF SILICON SHEET CRYSTALS

CONTRACTUAL ORIGIN OF THE INVENTION

The U.S. Government has rights in this invention under Contract No. DE-AC02-83CH10093 between the U.S. Department of Energy and the Solar Energy Research Institute, a Division of Midwest Research Institute.

BACKGROUND OF THE INVENTION

1. Field of the Invention

The present invention relates to an apparatus and method for the continuous growth of a silicon sheet crystal for use in the manufacture of microchips in computer circuits, solar cells, or other devices.

2. Description of the Prior Art

The general method used for forming a silicon sheet crystal is to melt a source of silicon in a crucible and to draw the sheet of silicon from the molten source, which is cooled and solidified. For the sheet growth to be rapid, the solid-liquid interface must be of a substantially greater area than the cross-section of the sheet. The heat of fusion is liberated over a large area and can readily be removed by radiation, convection or conduction. Currently available fast, sheet growth methods include growth by horizontal ribbon growth or low, angle silicon sheet growth. These methods consist of holding the silicon melt in a quartz crucible and growing the ribbon laterally (within about 10° of horizontal) from the melt surface. Passive thermal modifiers, such as scrapers and inert gas cold shoes are used in an attempt to control the thermal environment of the sheet. The difficulty with these techniques is that a dendritic growth morphology degrades the ribbon quality, resulting in considerable waste.

Other fast, sheet growth methods include spin-casting the liquid on rapidly rotating horizontal disc or cylindrical wheel surfaces. None of these methods have been found entirely satisfactory for the creation of a uniform silicon sheet crystal that can be used as a substrate for computer chips or solar cells.

SUMMARY OF THE INVENTION

To achieve the foregoing other objects and in accordance with the purpose of the present invention, as embodied and broadly described herein, the apparatus of this invention comprises an economical commercial process for forming a continuous silicon sheet crystal.

It is another general object of the invention to form the continuous silicon sheet crystal without substantial defects.

It is a further general object to form the continuous silicon sheet crystal by means of a noncrucible process.

It is a more specific object of the invention to form a continuous silicon sheet crystal from a silicon rod.

It is a further, more specific object of the invention to form a continuous silicon sheet crystal using a radio frequency RF coil to heat at least a portion of the end of the rod to molten state in an inert atmosphere while the rod is rotated and fed toward the RF coil. The silicon sheet is simultaneously pulled from the molten silicon as it is cooled to form the continuous sheet.

Additional objects, advantages and novel features of the invention shall be set forth in part in the description that follows, and in part will become apparent to those

skilled in the art upon that examination of the following or may be learned by the practice of the invention. The object and the advantages of the invention may be realized and attained by means of the instrumentalities and in combinations particularly pointed out in the appended claims.

More particularly, the method of this invention is accomplished by means of apparatus for crucible-free growth of a sheet crystal of silicon. This apparatus comprises means for providing a substantially enclosed space having an inert atmosphere. Heating means is provided for sequentially forming molten silicon from a source of substantially pure silicon within the space. Means is also provided for vertically feeding the silicon source toward the heating means to form a molten layer of silicon at the top of the source, and means are provided for drawing a continuous silicon sheet crystal from the molten silicon layer within the space.

BRIEF DESCRIPTION OF THE DRAWINGS

The accompanying drawings, which are incorporated in and form a part of the specification, illustrate preferred embodiments of the present invention, and together with the description, serve to explain the principles of the invention. In the drawings:

FIG. **1** is a vertical section through a chamber having a controlled atmosphere and containing apparatus for carrying out the method of this invention;

FIG. **2** is an enlarged horizontal section, taken along line **2**—**2** of FIG. **1**, showing one form of an RF coil used in this invention;

FIG. **3** is a side elevation of the apparatus of FIG. **2**;

FIG. **4** is a fragmentary perspective view showing the use of a graphite rod to control the meniscus from the molten silicon;

FIG. **5** is a fragmentary perspective view, similar to FIG. **4** but showing the use of a shorting ring having a plate to control the meniscus of the molten silicon;

FIG. **6** is a fragmentary perspective view, similar to FIGS. **4** and **5**, but showing the use of a secondary RF coil to control the meniscus of the molten silicon;

FIG. **7** is a fragmentary, enlarged, vertical section, taken along line **7**—**7** of FIG. **6**, showing the repulsion forces exerted by the secondary RF coil; and

FIG. **8** is a fragmentary perspective view, similar to FIGS. **4**–**6**, but showing an RF coil having a reverse loop.

DETAILED DESCRIPTION OF THE PREFERRED EMBODIMENTS

In accordance with this invention, a closed chamber C is provided in which the atmosphere can be controlled. A silicon rod **10** is mounted on a vertically movable post **12** by means of a clamp **14**. The post **12** extends through a seal **16** in the bottom **17** of the chamber and is rotatably supported in a bearing **18** on a platen **20**. The post **12** and attached silicon rod **10** can be rotated by means of motor **22** through pulley **24**, as shown. Platen **20** is vertically movable along support rods, such as support rods **26** and **28**. It will be understood that while only two support rods have been illustrated, three or four such rods would be adequate to support chamber C above base **30** to which the lower end of the rods are connected. Conveniently, platen **20** has bearings **32** and **34**, respectively, for facilitating sliding movement along support rods **26** and **28**.

Vertical movement of platen **20** and hence post **12** and silicon rod **10** is accomplished by means of lead screw **36** rotatably supported in bearings **40** and **42** on chamber bottom **17** and base **30**, respectively, and extended through threaded coupling **38** in platen **20**. The lead screw is rotated by reversible motor **44** connected thereto by means of pulley **46** to control vertical movement in either direction of platen **20** as well as post **12** and silicon rod **20**.

An RF heating coil H is fixedly mounted above the upper end of rod **10**, which includes a coil **48** extending above the upper end of silicon rod **10** for heating the same to a molten state for forming a silicon sheet crystal **50**, as will be more fully described below. Heating coil H is connected externally of chamber C through electrical leads **54** and **56** to an RF generator (not shown) operating at a frequency between 1 to 4 MHz. The electrical leads also serve as water supply pipes for cooling the heating coil. A grounding wire **57** extends from coil **48**, to the wall of chamber C.

For some applications, a shorting ring **58** will be provided that surrounds rod **10** below its upper end and is supplied externally with cooling water through tubes **60** and **62**. The purpose of the shorting ring will be discussed more fully below.

An inert gas, such as argon, is supplied to chamber C through a conduit **63** from an argon supply (not shown). Additional argon gas may be supplied through gas nozzle **64**, made of any suitable material such as fused quartz, which is connected to an external source of argon (not shown) through tubing **66**. The gas nozzle **64** cools the molten silicon as sheet crystal **50** is formed. This feature will be described more fully below. Argon gas is continually purged through the chamber and exits through silicon sheet discharge opening **68**. The laminar flow of the argon gas through opening **68** is at sufficient volume to inhibit any backflow of air into the chamber. It has been found that a flow of 5 to 10 ft^3/h is satisfactory and that the pressure within the chamber is less than 1 psi above atmosphere.

Silicon sheet **50** is drawn through discharge opening **68**, by means of spaced pairs of rollers **70** and **72**, and **74** and **76**, respectively. These rollers are driven, by means of a motor **78** through a drive means, such as drive belt **80**. It will be understood that a similar drive belt can also be connected to roller **72**, but is omitted for clarity of illustration. The silicon sheet can be pulled at any desired speed up to about 750 mm per minute. The faster the flow of the argon stream through jet **64**, the faster the sheet can be pulled. Also the less RF power to RF heating coil H the greater the speed at which the sheet can be drawn. The drive roller support **82** can be vertically adjusted, as by adjustment screw **84**, which will permit an adjustment of the angle of silicon sheet **50** as it is drawn from the molten material at the upper end of silicon rod **10**. The purpose of this adjustment will be more fully explained below.

In order to initially heat the upper end of silicon rod **10** to a temperature where its conductivity is high enough to couple directly to the RF coil, a graphite disc heater **86** is suspended above heating coil H from vertically movable post **88** by means of support wires **90**. Conveniently, post **88** is slidably movable through seal **92** in upper plate **94** on chamber C. The upper end of post **88** is rotatably mounted in a bearing **96** of vertically movable platen **98**. The platen is supported on a plurality of support rods, such as support rods **100** and **102** that extend between plate **94** and top plate **104**. Although only two support rods have been shown, it will be understood that three or four can conveniently be utilized to provide proper support for the structure. A lead screw **106** is rotatably supported in bearings **108** and **110** and upper plate **94** and top plate **104**, respectively. The lead screw **106** extends through a threaded coupling **112** in platen **98** and is driven by a reversible motor **114** that is connected to the lead screw through a pulley **116** for vertically moving platen **98** as well as post **88** and silicon disc **86** suspended therefrom.

The operation of the apparatus of this invention and the method of forming a silicon crystal sheet will be apparent from a review of FIGS. **2** and **3**. As previously stated, the upper end of rod **10** is heated by RF heating coil H. Rod **10** is continuously rotated at a speed that can vary from 3 to 20 rpm. A speed of 10 rpm has been found to be very satisfactory. RF heating coil H includes a coil element **48** having a generally U-shaped configuration that, as viewed in FIG. **2**, has outer curved portions **118** and **120** that curve back upon themselves forming sharp bends **122** and **124**, respectively, and are joined together by a straight, central portion **126**. The radio frequency signal passing through coil **48** magnetically induces a current to flow in the top of silicon rod **10**, and resistance of the rod to the flow of current gives rise to heat, which forms a molten top surface **128**. The portion of the rod top that rotates under the enclosed area of the coil undergoes intense RF heating bringing the upper end of the rod to its melting point of 1412° C. The portion that is outside the enclosed region is not actively heated. The silicon sheet crystal grows from this cooler region as will be more fully explained.

To begin the process of forming the silicon sheet crystal, a stainless steel strip **130** is fed into chamber C through discharge opening **68** by the drive rollers and reversible motor **78**. Strip **130** has a short seed single crystal silicon tab **132** attached thereto, as by wires **134**. This tab **132** is brought in contact with the molten upper surface **128** of rod **10** by angularly adjusting drive roller support **82** by means of adjustment screw **84** so as to lower silicon seed strip **132** down onto the molten silicon so that it adheres thereto. As rod **10** rotates, stainless steel strip **130** will be pulled from chamber C by reversing motor **78**, and molten silicon that adheres to seed strip **132** will solidify forming a silicon crystal sheet that can be used for forming microchips, solar cells, or other electronic circuit elements.

Two effects define the leading edge portion of the drawing sheet. One is the large temperature gradient that exists between the area outside the enclosed loop of the coil and the area inside the loop. The other effect is the depression **136** of the melt surface due to RF repulsion along straight section **126**. The regions of melt immediately under section **126** of RF coil **48** carry a current moving in the opposite direction to that in the coil. Because of this action, the melt surface is free to rearrange under this force and become depressed in this region. The melt has a relatively high mesa in the cooler area in the opening of the U-shaped portion, where the sheet solidifies, but has a valley under the straight section **126** of the tubing. This effect, with the temperature gradient, defines the leading edge of the silicon crystal sheet.

Cooling of the crystal sheet also can be enhanced by supplying argon gas through nozzle **64** to the upper surface of the rod adjacent to coil section **126**. As seen in FIG. **2**, the nozzle is shaped to provide a stream of

cooling gas across the width of the crystal sheet. A gas flow up to about 5 ft^3/h has been found to be satisfactory.

As described above, the rod can be moved upwardly by reversible motor **44** of FIG. **1**. The speed at which it is moved depends on the sheet width, thickness and growth velocity as well as the diameter of the silicon rod. If the sheet has a width W, a thickness T and a growth velocity V, then a feed rod having a diameter D should be moved upwardly at a speed S to maintain steady-state continuous growth conditions:

$$S = \frac{4\,WTY}{\pi D^2}$$

It is contemplated that when using a silicon rod having a 48 to 50 mm diameter, that the width of the silicon crystal sheet would be on the order of 18 mm. As the silicon sheet is pulled from the molten surface **128**, a meniscus **138** is formed in the area of pull, as best seen in FIG. **3**. There is a tendency for this meniscus to spill over the side of the rod and to cause defects in the bottom surface of the silicon crystal sheet. In the embodiment of FIG. **4**, a graphite rod **140** is provided underneath silicon crystal sheet **50** at the meniscus and is provided with a quartz sheath **142** that serves to support the meniscus and to allow the sheet to be pulled from the surface **128** without distortions or defects in the sheet. Leads **144** and **146** extend from opposite ends of graphite rod **140** and are connected to a suitable variable source of AC or DC power for heating the graphite rod to a temperature of 1,000° to 1,500° C.

Another concept for supporting the meniscus is shown in FIG. **5** wherein a shorting ring **58'** includes a shaped copper block **148** that supports the meniscus **138** in much the same manner as quartz rod **140**. Block **148** is chilled by water circulating through shorting ring **58'**. In this embodiment, an RF heating coil H' is provided that has a coil element **48'** with a flat conducting plate **150** attached to the bottom thereof, as by braising or welding, for distributing heat more evenly to the upper molten surface **128** of silicon rod **10**.

In the embodiment of FIG. **6**, the repulsive force created by an RF coil is utilized to support the meniscus. In this arrangement, an RF coil **152**, which is much smaller in diameter than RF coil **48'**, extends around silicon crystal sheet **50** with the lower portion thereof adjacent to the meniscus so as to repel it with a repulsion force holding it up so that there is less likelihood of defects being formed in the bottom of sheet **50** as it is drawn from molten surface **128**. The effect of the repulsive force created by coil **152** can be seen in FIG. **7**.

An alternative RF heating coil H'' is shown in FIG. **8**, that includes a coil element **48''** which has formed integrally therewith an additional or outer loop **154** extending around the outside of inner coil element **48''**. With this arrangement, the radio frequency current in outer loop **154** and the current that it induces in the meniscus region **138** are in opposite directions causing again a repulsive supporting force on the meniscus similar to that shown in FIG. **7**. Also, inner coil element **48''** may be provided with a flat plate **150''** to further enhance distribution of the heat across the top of the rod.

The foregoing is considered as illustrative only of the principles of the invention. Further, since numerous modifications and changes will readily occur to those skilled in the art, it is not desired to limit the invention to the exact construction and operation shown and described, and accordingly, all suitable modifications and equivalents may be resorted to falling within the scope of the invention as defined by the claims that follow.

The embodiments of the invention in which an exclusive property or privilege is claimed are defined as follows:

1. Apparatus for crucible-free growth of a sheet crystal of silicon, said apparatus comprising;

means for providing a substantially enclosed space having an inert atmosphere;

heating means for sequentially forming molten silicon from a source of substantially pure silicon within the space;

means for vertically feeding a silicon source toward said heating means to form a molten layer of silicon at a top of the source;

means for drawing a continuous silicon sheet crystal from the molten silicon layer within the space; wherein a meniscus of molten silicon is created by said drawing means, said apparatus including means to control the shape of the meniscus, and wherein said controlling means includes a repulsive RF generator for repulsive support of the meniscus as a molten silicon sheet crystal is drawn from the molten silicon.

2. Apparatus, as claimed in claim **1**, wherein the silicon source is in the form of a feed rod and said feeding means comprising:

means for rotating said feed rod.

3. Apparatus, as claimed in claim **1**, wherein said drawing means comprises:

feed rollers for pulling the sheet crystal continuously from the molten silicon.

4. Apparatus, as claimed in claim **1**, wherein said means for providing the inert atmosphere include:

means providing an argon atmosphere around the molten silicon.

5. Apparatus, as claimed in claim **1**, wherein said controlling means includes:

a chilled block for supporting the meniscus as the molten silicon sheet crystal is drawn from the molten silicon.

6. Apparatus, as claimed in claim **1**, wherein said controlling means further includes:

an electrically heated graphite rod having a quartz sheath for supporting the meniscus as the molten silicon sheet cyrstal is drawn from the molten source.

7. Apparatus, as claimed in claim **1**, further including:

a nozzle for directing an inert gas against the leading edge of the sheet crystal to cool the same.

8. Apparatus, as claimed in claim **1**, further including:

means for limiting the heating of the silicon source below the layer of molten silicon.

9. Apparatus, as claimed in claim **8**, wherein said limiting means includes:

an RF shorting ring, substantially surrounding the silicon source.

10. Apparatus for crucible-free growth of a sheet crystal of silicon, said apparatus comprising:

means for providing a substantially enclosed space having an inert atmosphere;

heating means for sequentially forming molten silicon from a source of substantially pure silicon within the space;

means for vertically feeding a silicon source toward said heating means to form a molten layer of silicon at the top of the source;

means for drawing a continuous silicon sheet crystal from the molten silicon layer within the space, feeding means comprising means for rotating a feed rod, and wherein said heating mean comprises an RF coil having a generally U-shape configuration for heating a localized area of a top of a rod and providing access for said drawing means to a remaining area of the top of the rod so that a silicon sheet crystal is formed as the molten silicon begins to cool due to the rotation of the rod to move the molten silicon from the localized area to the remaining area, and wherein said coil further includes an additional RF loop around the outside of said U-shaped coil to provide support for the meniscus from which the sheet solidifies.

11. Apparatus, as claimed in claim **10**, wherein:

said RF coil includes an extended plate area to provide substantially uniform distribution of heat over the localized area.

12. An apparatus for crucible-free non-dendritic growth of a silicon crystal sheet from a rod-like source of substantially pure silicon having an end, said apparatus comprising:

RF heating means for continuously forming molten silicon from a rod-like source of substantially pure silicon having an end;

means for vertically feeding the end of the silicon source toward said RF heating means;

said RF heating means comprising a single coil element having a generally U-shaped configuration, said single coil element defining two generally parallel transversely spaced longitudinally extending coil element sections, said two coil element sections extending longitudinally from a first end of said single coil element to a second end thereof and being curved back from said second end so as to form a generally straight tranversely extending central coil element section, said central coil element section being positioned intermediate said first and second end, said central coil section, said first end, and said two longitudinally extending coil sections forming a gap that defines a first enclosed portion of said RF heating means, said two coil element sections longitudinally extending from said central coil section to said second end defining a second portion of said RF heating means, wherein said first portion of said RF heating means, during heating, intensely heats a first region of the end of the silicon source to its melting temperature and thereby causes said first region to be depressed, and wherein the second portion of said RF heating means is shaped such that, during heating, a second portion of the end of the silicon source remains outside of said first enclosed portion of said RF heating means to prevent active heating of said second portion of the end of the silicon source thereby causing said second region to form a mesa and to be sufficiently cool with respect to said first region so as to enable growth of a non-dendritic silicon crystal sheet, and wherein said RF heating means, during heating, causes a leading edge portion to form at the end of the silicon source; and

means for horizontally drawing a continuous non-dendritic silicon crystal at the edge portion.

13. A crucible-free, non-dendritic growth method for continuously forming a silicon crystal sheet from a rod of substantially pure silicon, said method comprising:

employing an RF heating means having first and second portions to provide a molten layer at an end of the silicon rod in an inert atmosphere by actively heating a first region at the end of the silicon rod while preventing an active heating of a second region of said end of the silicon rod;

rotating said pure silicon rod while actively heating said first region with the first portion of said RF heating means and while preventing the active heating of said second region with said second portion of said RF heating means, so as to cause said first region to be depressed and to cause said second region to have a mesa and be sufficiently cooler than the first region so as to enable a growth of said non-dendritic silicon crystal sheet;

providing said molten layer with a leading edge for growing therefrom said non-dendritic silicon crystal sheet, through said heating with said RF heating means, such that said leading edge is defined by the effects of a temperature gradient existing between the cooler mesa region and the first region of the molten layer; and

horizontally drawing a continuous non-dendritic silicon crystal sheet at said leading edge.

* * * * *