United States Patent [19]

Farrington et al.

[11] **Patent Number: 4,626,832**

[45] **Date of Patent: Dec. 2, 1986**

[54] **SOLAR SYSTEM FAULT DETECTION**

[75] Inventors: **Robert B. Farrington**, Wheatridge; **James C. Pruett, Jr.**, Lakewood, both of Colo.

[73] Assignee: **The United States of America as represented by the United States Department of Energy**, Washington, D.C.

[21] Appl. No.: **609,686**

[22] Filed: **May 14, 1984**

[51] **Int. Cl.**[4] **G08B 19/00**

[52] **U.S. Cl.** **340/522**; 340/500; 340/501; 340/521; 340/525

[58] **Field of Search** ..... 340/522, 521, 525, 500, 340/501, 506, 679, 687, 635; 323/906; 237/1 R, 2 R; 126/419, 422; 165/18, 485, 11.1; 203/DIG. 1, 1; 62/235.1

[56] **References Cited**

U.S. PATENT DOCUMENTS

3,855,536	12/1974	Neuner	340/522
4,020,488	4/1977	Martin et al.	340/522
4,195,286	3/1980	Galvin	340/522
4,387,368	6/1983	Day, III et al.	340/521

FOREIGN PATENT DOCUMENTS

1234472	6/1971	United Kingdom	340/522

Primary Examiner—Donnie L. Crosland

Attorney, Agent, or Firm—Kenneth L. Richardson; John M. Albrecht; Judson R. Hightower

[57] **ABSTRACT**

A fault detecting apparatus and method are provided for use with an active solar system. The apparatus provides an indication as to whether one or more predetermined faults have occurred in the solar system. The apparatus includes a plurality of sensors, each sensor being used in determining whether a predetermined condition is present. The outputs of the sensors are combined in a pre-established manner in accordance with the kind of predetermined faults to be detected. Indicators communicate with the outputs generated by combining the sensor outputs to give the user of the solar system and the apparatus an indication as to whether a predetermined fault has occurred. Upon detection and indication of any predetermined fault, the user can take appropriate corrective action so that the overall reliability and efficiency of the active solar system are increased.

31 Claims, 2 Drawing Figures

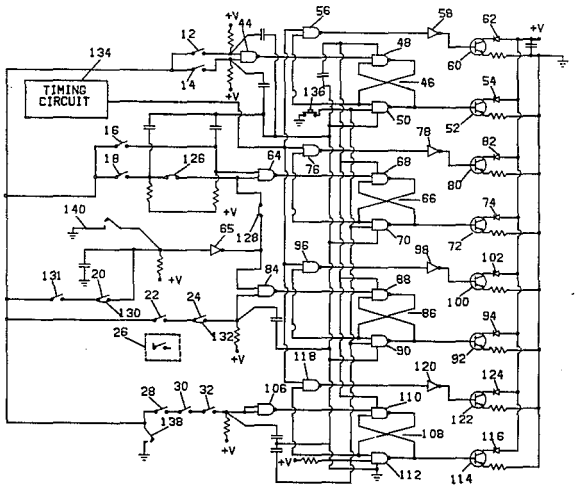

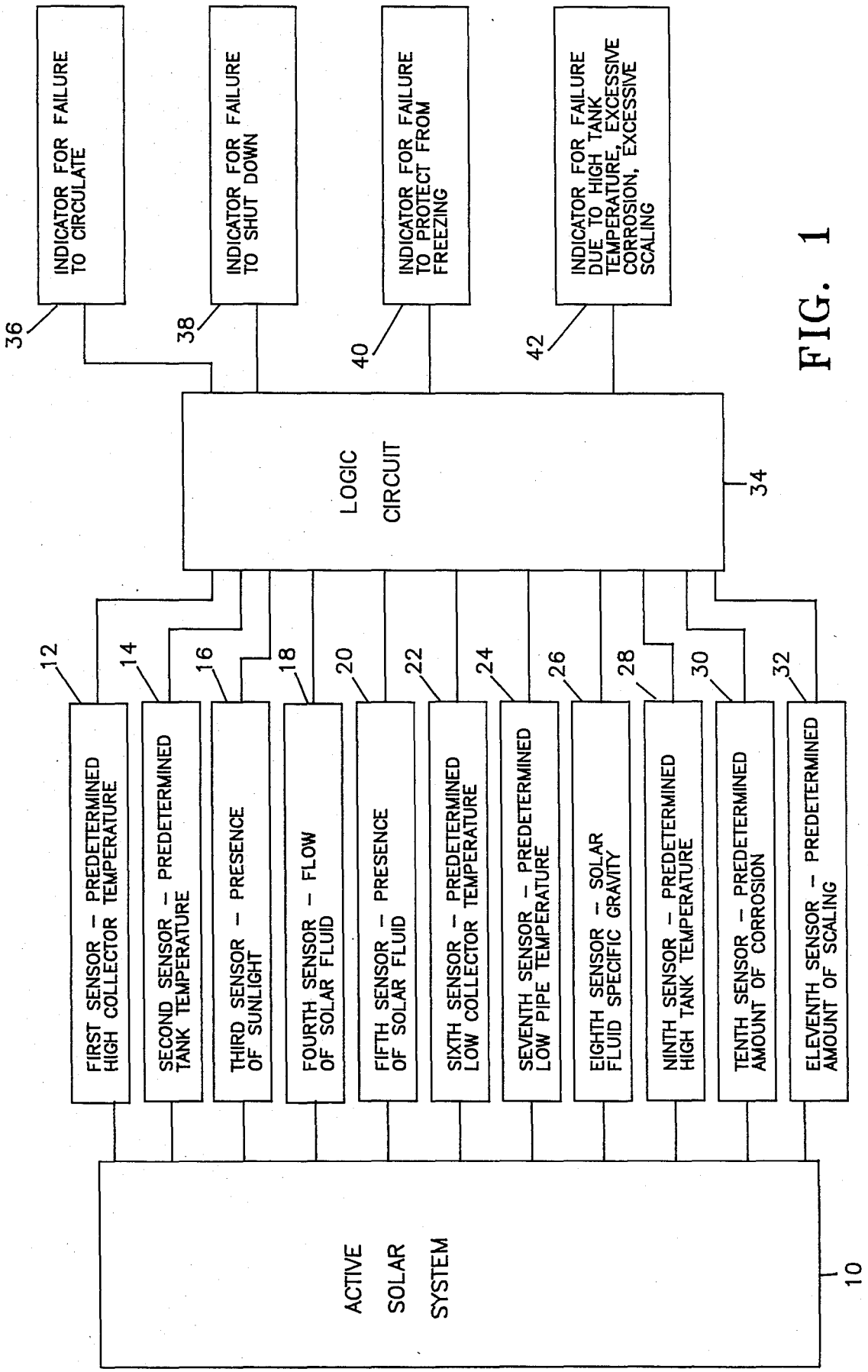
INDICATOR FOR FAILURE TO CIRCULATE
INDICATOR FOR FAILURE TO SHUT DOWN
INDICATOR FOR FAILURE TO PROTECT FROM FREEZING
INDICATOR FOR FAILURE DUE TO HIGH TANK TEMPERATURE, EXCESSIVE CORROSION, EXCESSIVE SCALING
36
38
40
42
LOGIC CIRCUIT
34
12
14
16
18
20
22
24
26
28
30
32
FIRST SENSOR – PREDETERMINED HIGH COLLECTOR TEMPERATURE
SECOND SENSOR – PREDETERMINED TANK TEMPERATURE
THIRD SENSOR – PRESENCE OF SUNLIGHT
FOURTH SENSOR – FLOW OF SOLAR FLUID
FIFTH SENSOR – PRESENCE OF SOLAR FLUID
SIXTH SENSOR – PREDETERMINED LOW COLLECTOR TEMPERATURE
SEVENTH SENSOR – PREDETERMINED LOW PIPE TEMPERATURE
EIGHTH SENSOR – SOLAR FLUID SPECIFIC GRAVITY
NINTH SENSOR – PREDETERMINED HIGH TANK TEMPERATURE
TENTH SENSOR – PREDETERMINED AMOUNT OF CORROSION
ELEVENTH SENSOR – PREDETERMINED AMOUNT OF SCALING
ACTIVE SOLAR SYSTEM
10

FIG. 1

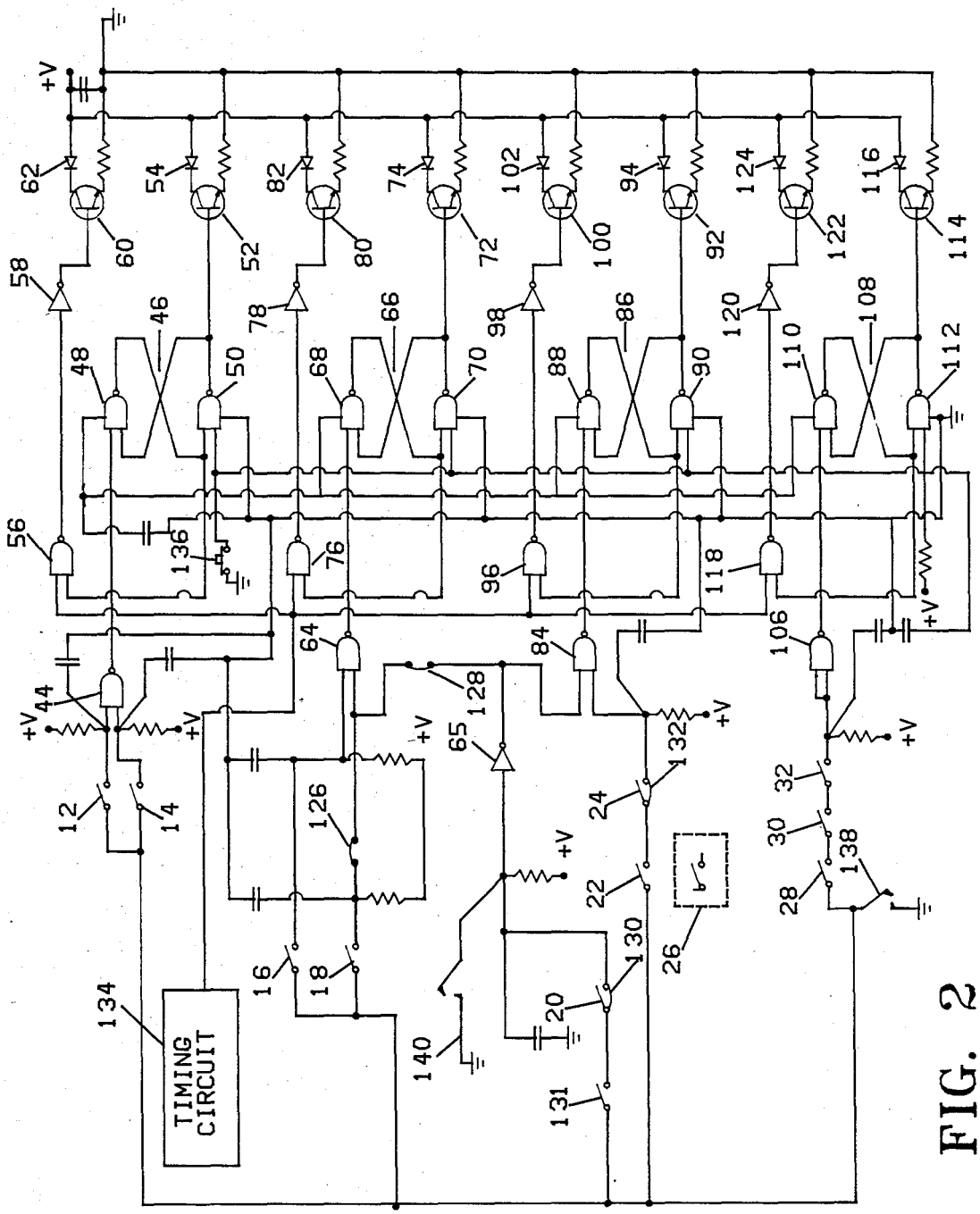

FIG. 2

SOLAR SYSTEM FAULT DETECTION

CONTRACTUAL ORIGIN OF THE INVENTION

The U.S. Government has rights in this invention under Contract No. DE-AC02-83CH10093 between the U.S. Department of Energy and the Solar Energy Research Institute, a Division of Midwest Research Institute.

BACKGROUND OF THE INVENTION

1. Field of the Invention

The present invention relates to a fault-detecting apparatus and method used in connection with an active solar system.

2. Description of the Prior Art

In active solar systems, including water systems and antifreeze systems, a number of faults can occur relating to the operation of the system. Such malfunctions include actual system failures which can be defined as failure of the solar energy-absorbing fluid (including but not limited to water and antifreezes) to circulate in the system, and failure to protect portions of the system and/or the solar fluid from freezing. Additionally, other failures can be defined relating to improper operation of the system wherein such operation leads to a loss of collected energy or are indicative of potential serious system problems including: the failure of the system to shut down when appropriate, e.g., sunlight not being available; failure to protect the storage tank of the system from overheating; failure due to excessive pipe corrosion; and failure due to pipe scaling, which is primarily the result of the high mineral content of water.

It would be advantageous to know when such failures occur so that the user or owner of the solar system is alerted to potentially expensive failures and is informed when the system is not operating properly. Such fault detection in an active solar system, such as a solar domestic hot water system, is particularly important because a conventional domestic hot water system normally is used as a backup or auxiliary system to the solar domestic hot water system. As a result, if the solar domestic hot water system fails, the user may only be minimally aware, if at all, of such a failure because the auxiliary system will continue to provide the necessary hot water.

To alleviate this serious deficiency associated with conventional active solar systems, such as the solar domestic hot water system, the present invention utilizes a fault detection system wherein the user is made aware of predetermined failures which can occur during the operation of the active solar system, and in particular the specific identity of the failure which has occurred. Based on this information, the user can take appropriate corrective action immediately thereby minimizing expensive solar system failures and enhancing the efficiency of the operation of the system. In contrast to conventional systems, as previously alluded to above, the user is made aware of the predetermined faults or failures even when a conventional hot water system is used as a back up system, and the hot water is still being provided to the user. In addition, because the present invention requires a manual resetting to remove a fault indication, even after a fault no longer exists, an indication is given to the user that a fault had occurred some time prior, as will be more fully explained hereinafter.

To continue, conventional control systems have been developed which sense predetermined conditions associated with a solar system to provide necessary controls in the operation thereof. Unfortunately, such control systems normally do not provide the desired capability of detecting the predetermined faults which can occur in an active solar system. The present invention, however, does achieve these desired results by monitoring predetermined conditions and making a determination as to whether predetermined faults have occurred. Moreover, it should be noted that the present invention does not even disclose or include a control system whereby control of the active solar system is effected. Instead, as just mentioned, it is directed to alerting the owner or user of the system of the predetermined failures. Because the present invention is not concerned with controlling the operation of the active solar system, the complexity thereof is reduced advantageously over that normally found in conventional solar system controllers.

Against the foregoing background, it is therefore a general object of the present invention to provide a fault-detecting apparatus for applications in active solar systems which advantageously alerts the user thereof to the occurrence of predetermined solar system failures and the specific identities thereof.

It is another general object to provide a low-cost, substantially efficient, simplified, fault-detection system for active solar system applications.

It is a more specific object to provide a fault-detecting apparatus which can be used with either water or anitfreeze-type active solar systems.

It is still another specific object to provide a fault detecting system for active solar system applications which is enabled to indicate whether a number of predetermined failures associated with the active solar system have occurred, i.e., failure of the fluid to circulate in the system, failure of the system to shut down when predetermined conditions are present, failure to protect the collectors or pipes from freezing, failure to prevent overheating of the tank, failure due to excessive corrosion of pipe, and failure due to excessive scaling of pipe.

It is yet another specific object to provide a fault detecting apparatus for active solar system applications having a logic circuit which is enabled to give a visual indication as to whether or not predetermined faults associated with the system have occurred.

It is yet and still another specific object to provide a fault detecting system for active solar system applications which includes a means for manually resetting a fault indication to effect its removal.

SUMMARY OF THE INVENTION

To the accomplishment of the foregoing objects and advantages, the present invention in brief summary comprises a fault-detecting apparatus operatively associated with an active solar system. The fault-detecting apparatus can be used with either water or antifreeze systems. The apparatus detects and indicates to the user whether or not predetermined faults associated with the operation of the solar system have occurred. As a result of the indication of any predetermined faults, the system user can take the appropriate action using the knowledge gained relating to which of a plurality of predetermined faults have occurred.

The apparatus of the present invention includes a number of sensors in operative association with an active solar system, such as a solar domestic hot water system. The sensors are used to detect a number of

predetermined conditions associated with the hardware of the system, including solar collectors, pipes, and a tank for receiving the solar fluid. These predetermined conditions relate to the temperature of the solar collectors, the temperature of the tank, whether sunlight is present or not, whether fluid is moving in collectors or pipe, whether fluid is present in the solar collectors or pipe, the temperature of the pipes and collectors carrying the fluid, and the amount of corrosion and scaling present in the pipes.

The apparatus further includes a logic circuit for combining the outputs of the sensors in a desired manner so that the outputs of the logic circuit provide signal states indicative of whether one or more predetermined faults have occurred. Each of the output signals from the logic circuit is applied to an appropriate one of a plurality of indicators whereby a light is lit indicating whether or not a predetermined fault has occurred. From these visual indications, the user is informed as to whether a number of predetermined failures have occurred including failure of the fluid to circulate in the system, failure of the system to shut down when predetermined conditions are present, failure to protect the collectors or pipes from freezing, failure to prevent overheating of the tank, failure due to excessive corrosion of pipe, and failure due to excessive scaling of pipe. Related to the operation of the indicators, flip-flops are used so that, when a fault occurs, a manual resetting is required to remove the fault indication.

BRIEF DESCRIPTION OF THE DRAWINGS

The foregoing and still other objects and advantages of the present invention will be made more apparent from the following detailed explanation of the preferred embodiments of the invention in connection with the accompanying drawings wherein:

FIG. 1 is a block diagram illustrating the present invention; and

FIG. 2 is a schematic of the sensors, logic circuit, and indicators of one embodiment of the present invention.

DETAILED EXPLANATION OF THE PREFERRED EMBODIMENTS OF THE INVENTION

In accordance with the present invention, and referring to FIG. 1, a fault-detecting apparatus is provided for detecting predetermined faults or failures in connection with the operation of an active solar system **10**, such as a domestic hot water system. The invention uses sensed, predetermined conditions, and combines them in a predetermined manner to provide an indication as to whether one or more predetermined failures have occurred.

The active solar system **10** is a well-known or conventional system for using solar energy to heat fluid, e.g., water or antifreeze, and the present invention can be used with both water and antifreeze systems. With respect to water systems, the apparatus of the present invention can be used with each of such available solar systems conventionally identified as drainback, draindown (drainout), and recirculation systems.

The active solar system **10** typically includes one or more solar collectors and one or more pipes for carrying solar fluid to be heated by solar energy, and a tank for receiving solar fluid. At least some of the pipe is used to interconnect the solar collectors and the tank.

In sensing the predetermined conditions, a number of sensors **12–32** are employed. A first sensor **12** is attached to a solar collector and is used to monitor for a predetermined high collector temperature. When this predetermined temperature is reached or exceeded, the first sensor **12** outputs a signal indicating that this predetermined condition has occurred. In one embodiment, the first sensor **12** is a temperature snap switch. A sensor **14** is attached to the tank and is used to monitor for the presence of a tank temperature which is equal to or below a predetermined temperature. When such a condition occurs or is present, the second sensor **14** outputs a signal indicating the existence of this predetermined condition. Like the first sensor **12**, the second sensor **14** is also preferably a temperature snap switch. A third sensor **16** is used to monitor for the presence of sunlight, and thus can be placed nearly anywhere in the system that receives adequate sunlight to allow proper operation. When sunlight is present, the output of the third sensor **16** is a signal indicating that sunlight is present. In detecting the presence of sunlight, a photoelectric cell or photodiode can be used to detect the presence or absence of irradiance. The first, second, and third sensors **12, 14, 16**, respectively, are each used in both antifreeze and water systems.

In antifreeze systems, as well as water draindown and recirculation systems, a fourth sensor **18** is used to monitor for flow of the solar fluid in the solar system. The output signal from the sensor **18** therefore provides an indication as to whether solar fluid is moving in the system. In one embodiment, the fourth sensor **18** is a flow switch which is provided in the pipe or collector to detect the flow of solar fluid therethrough.

In draindown and drainback systems, a fifth sensor **20** is employed for monitoring the presence of water. The output signal from the fifth sensor **20** provides an indication therefore as to whether water is present in the collector or pipe, at which pipe or collector the sensor **20** is normally positioned. In one embodiment, a liquid float switch acts as the fifth sensor **20**.

Sixth and seventh sensors **22, 24**, respectively, are used in water systems for monitoring the temperature of the collector and the temperature of pipe through which the water flows. When the temperature of the collector or the pipe is equal to or below a predetermined temperature, the output of the appropriate sensor **22** or **24** is a signal indicating that such a predetermined condition exists. In one embodiment, the sixth and seventh sensors **22, 24** are temperature snap switches. The sensors **22, 24** are normally positioned at the collector and the pipe, respectively.

An eighth sensor **26** is used to monitor for low fluid specific gravity and is provided in antifreeze systems. In one embodiment, the eighth sensor **26** is a hydrometer switch positioned in the pipe for monitoring the specific gravity or density of the solar fluid so that, as the freezing point of the antifreeze rises, the specific gravity thereof drops. When the specific gravity is equal to or falls below a predetermined value, the eighth sensor **24** outputs a signal indicating that this predetermined condition has occurred. In one embodiment, the eighth sensor **26** replaces the sixth and/or seventh sensors **22, 24** or both since such sensors **22, 24** are not needed in an antifreeze solar system.

A ninth sensor **28** is used to monitor for a predetermined high temperature of the tank at which the sensor **28** is normally located. When this predetermined temperature is reached or exceeded, the ninth sensor **28** outputs a signal indicating that the predetermined high

tank temperature exists. In one embodiment, the ninth sensor **28** is a temperature snap switch.

A tenth sensor **30** is provided or suspended in the solar fluid to monitor for corrosion of the pipe. In one possible embodiment, the tenth sensor **30** is a thin metal foil fuse which triggers a change in state if fluid penetrates the foil. Another possible embodiment includes a metal wire wherein a change in resistance is detected, as the cross-sectional area of the wire decreases due to corrosion.

An eleventh sensor **32** is provided or suspended in the solar fluid for use in monitoring the presence of scaling in the pipe. This detecting capability is expected to only be used in water systems because scaling is primarily due to high mineral content water. In one possible embodiment, the eleventh sensor **32** includes a self-heating device that overheats due to the insulating nature of the scaling.

The outputs from each of the sensors **12–32** are applied to a logic circuit **34**. The logic circuit **34** combines outputs of the sensors **12–32** in a predetermined manner so that the outputs from the logic circuit **34** are indicative of whether one or more predetermined faults are present or existing in the system. The outputs of the logic circuit **34** communicate with a number of indicators **36, 38, 40, 42** that visually display the presence or absence of predetermined faults to the user or owner of the system.

As FIG. **1** shows, indicator **36** is provided to indicate whether there is a failure of the solar fluid to circulate in the system. This predetermined fault is indicated when both first sensor **12** indicates that a predetermined high collector temperature is reached or exceeded and when the second sensor **14** indicates that the tank temperature is equal to or below a predetermined temperature. The existence of both conditions is required before a failure is found because many controllers used in active solar systems intentionally stop pump operation and thereby increase the temperature of the collector when a predetermined high tank temperature is sensed in order to prevent high tank temperature. Consequently, the present invention requires that both these conditions be met before the failure to circulate fault is indicated.

In an antifreeze system using flat-plate collectors, the first sensor or temperature snap switch **12** should actuate at about 120° C. As a general rule, the temperature snap switch **12** should actuate below the pre-established temperature which actuates the pressure/temperature relief valve in the system.

In water systems, the temperature/pressure relief valve actuates at 125 psig and 210° F. Accordingly, the first sensor or temperature snap switch **12** should therefore actuate below 210° F. (98° C.).

The indicator **38** is provided to indicate whether or not there has been a failure of the solar system **10** to shut down under appropriate circumstances. This predetermined failure occurs when certain conditions exist, depending upon the type of system being used. In the case of antifreeze systems water draindown systems, and water recirculation systems, this failure is present when no sunlight is present while, at the same time, the flow of solar fluid is detected. In the case of water drainback systems, this failure exists when no sunlight is detected while, at the same time, the presence of water is sensed in the pipe or collector. These different combinations of conditions indicate that the pump has not shut down or deactivated after sunset. This incorrect mode of operation leads to loss of collector energy and reduces system effectiveness.

The indicator **40** is provided to indicate whether there has been a failure to protect the system from freezing. In antifreeze systems, the change of state of the eighth sensor or hydrometer switch **26** triggers an indication that such a failure is present.

In water systems, this failure exists when certain combinations of predetermined conditions are present. In drainback and draindown systems, when the fifth sensor **20** indicates that water is present and the temperature of the collector is equal to or less than a predetermined temperature or the temperature of the pipe is equal to or less than a predetermined temperature, an indication is provided that the water system has failed in being protected from freezing.

With regard to recirculation systems, since recirculation systems are designed to prevent the collector and pipe from reaching low temperatures during freezing conditions, the failure exists when the temperature of the collector is equal to or less than a predetermined temperature or when the pipe temperature is equal to or less than a predetermined temperature.

Both a predetermined low collector temperature and a predetermined low pipe temperature are sensed because the temperature of one of them may be below freezing while the other is not. That is, a collector can freeze from radiant cooling on clear nights with the ambient temperature above freezing so that the pipe does not freeze, while the pipe can freeze on cold winter days having below freezing temperatures and marginal solar irradiance, which will not initiate pump operation but will warm the collector to temperatures above freezing. Additionally, to prevent an unwanted indication of a failure relating to freezing, it may be desirable to have a built-in time delay to prevent a false indication of freezing when the collector is sufficiently warm to warrant pump operation but the pipe is still cold from the previous night.

The indicator **42** is provided to indicate that a failure has occurred due to the detection of one or more of three predetermined conditions. When the ninth sensor **28** detects that a predetermined high tank temperature has been reached or exceeded, an indication of a failure is provided by the indicator **42**. Likewise, when a predetermined magnitude of corrosion exists in the pipe causing a change of state in the tenth sensor **30**, a failure indication is provided by the indicator **42**. Similarly, when a predetermined magnitude of scaling exists in the pipe causing a change of state in the eleventh sensor **32**, this failure indication will be provided by the indicator **42**. It is readily understood that each of the sensors **28, 30, 32** could communicate with a separate indicator so that the user or owner is made aware of which of the three failures is present.

Referring now to FIG. **2**, the logic circuit **34**, as well as the indicators **36–42**, are shown in more detail. In addition, the sensors **12–32** are represented as switches which communicate with a number of logic gates. Specifically, the outputs of the first sensor **12** and the second sensor **14** are inputted to NAND gate **44**. The output of the NAND gate **44** is sent to a flip-flop **46**. The flip-flop **46** includes NAND gate **48** and NAND gate **50**. The output of the NAND gate **50** is applied to the base of a transistor switch **52**. The transistor switch **52** controls the turning on and turning off of the LED **54**. When the transistor **52** is turned on, a green indication is provided. The output of the NAND gate **48** of the

flip-flop **46** is applied to the NAND gate **56**. The output of the NAND gate **56** is sent to an Inverter **58**, the output of which is sent to the base of transistor switch **60**. The transistor switch **60** controls the turning on and turning off of the LED **62**. When the transistor switch **60** is turned on, the LED **62** provides a red indication.

The output of the third sensor **16** is applied to the NAND gate **64**. The output of the fourth sensor **18** is also applied to the NAND gate **64**. The fifth sensor **20** also communicates with the NAND gate **64**, the output thereof being first inverted by the Inverter **65**. The output of the NAND gate **64** is sent to a flip-flop **66**, which includes NAND gates **68**, **70**. The output of the NAND gate **70** is sent to the base of the transistor switch **72**, which controls the turning on and turning off of the LED **74**. When the transistor switch **72** is turned on, the LED **74** provides a green indication.

The output of the NAND gate **68** is inputted to the NAND gate **76**. The output of the NAND gate **76** communicates with an Inverter **78**, and the transistor switch **80** is responsive to the output of the Inverter **78**. The transistor switch **80** controls the turning on and turning off of the LED **82**. When the transistor **80** is turned on, the LED **82** provides a red indication.

The output of the fifth sensor **20** is electrically connected to the input of the Inverter **65** which is connected to the input of the NAND gate **84**. Also being inputted to the NAND gate **84** are the outputs from the sixth and seventh sensors **22**, **24**. In the case of an antifreeze system, the eighth sensor **26** replaces one or both sensors **22**, **24**.

The output of the NAND gate **84** is sent to the flip-flop **86**, which includes NAND gates **88**, **90**. The output of the NAND gate **90** is applied to the base of the transistor switch **92**, which controls the turning on and turning off of the LED **94**. When the transistor **92** is turned on, the LED **94** provides a green indication. The output of the NAND gate **88** of the flip-flop **86** is also inputted to the NAND gate **96**. The output of the NAND gate **96** is sent through the Inverter **98** to the base of the transistor switch **100**. The transistor switch **100** controls the turning on and turning off of the LED **102**. When the transistor **100** is turned on, the LED **102** provides a red indication.

The outputs from the ninth sensor **28**, the tenth sensor **30**, and the eleventh sensor **32** are inputted to the NAND gate **106**. The output of the NAND gate **106** communicates with the flip-flop **108**, which includes the NAND gates **110**, **112**. The output of the NAND gate **112** is sent to the base of the transistor switch **114**. The transistor switch **114** controls the turning on and turning off of the LED **116**. When the transistor switch **114** is turned on, the LED **116** conducts and provides a green indication. The output of the NAND gate **110** of the flip-flop **108** is also applied to the NAND gate **118**. The output of the NAND gate **118** is applied through the Inverter **120** to the base of the transistor switch **122**, which controls the turning on and turning off of the LED **124**. When the transistor switch **122** is turned on, the LED **124** conducts and provides a red indication.

OPERATION

The sensing, determining, and indicating of each of the predetermined failures associated with the present invention will now be discussed. When a failure of the solar fluid to circulate exists, the temperature of the collector is equal to or greater than a predetermined high temperature and the temperature of the tank is equal to or less than a predetermined temperature. In such a case, the first sensor or switch **12** opens indicating that the predetermined high temperature has been reached or exceeded and the sensor or switch **14** also opens indicating that the tank temperature is less than or equal to the predetermined temperature. With both switches **12**, **14** open, both of the inputs to the NAND gate **44** are a logic HIGH. The output of the NAND gate **44** is then a logic LOW. This logic LOW is inputted to NAND gate **48** of flip-flop **46**, which results in a logic LOW output from NAND gate **50** thereby turning off the transistor switch **52**, and the green light indication provided by the LED **54** is no longer present. Conversely, the LED **62** of the indicator **36** conducts through the transistor switch **60**, which has been turned on by the output of the Inverter **58**. The output of the Inverter **58** is logic HIGH because of the logic HIGH being inputted to the NAND gate **56** from the NAND gate **48**. Because the LED **62** conducts, a red light indication is provided indicating that a failure to circulate exists in the system.

When the collector temperature is less than the predetermined high temperature, or the tank temperature is greater than a predetermined temperature, or both, a logic HIGH is outputted by the NAND gate **44** because one or both inputs thereto are a logic LOW. This logic HIGH results in a logic HIGH output from NAND gate **50** thereby turning on the transistor switch **52** and causing the LED **54** to conduct. Conversely, the LED **62** is in its nonconducting state because the transistor switch **60** is turned off by the logic LOW outputted by the Inverter **58**.

The predetermined fault identified as a failure of the system to shut down exists under different conditions, depending upon the type of solar system utilized. In the embodiment shown in FIG. **2**, the present invention can be used with each of such systems with minor modifications to the hardware. In particular, for antifreeze systems and water draindown and recirculation systems, the shorting wire or jumper **126** located between the output of the fourth sensor **18** and the input to the NAND gate **64** is included or remains in place, while the jumper **128** located between the output of the Inverter **65** and the input to the NAND gate **64** is removed or opened. With these adaptations in place, the failure of the system to shut down exists when sunlight is not detected and, at the same time, the flow of solar fluid is detected. Specifically, when sunlight is not present, the third sensor or switch **16** is open causing a logic HIGH input to the NAND gate **64**. When the flow of solar fluid is also detected, the fourth sensor or switch **18** opens thereby inputting a logic HIGH to the NAND gate **64**. With both inputs to the NAND gate **64** being a logic HIGH, a logic LOW is outputted therefrom to NAND gate **68** of flip-flop **66**. The output of the NAND gate **70** of the flip-flop **66** is also a logic LOW because of the logic LOW input to the flip-flop **66**. The logic LOW output from NAND gate **70** causes the transistor switch **72** to turn off thereby preventing conduction through the LED **74** and extinguishing the green light indication provided by the LED **74**. Conversely, the output of the NAND gate **68** of the flip-flop **66** is a logic HIGH resulting in a logic LOW output from the NAND gate **76**. This output is inverted to a logic HIGH by the Inverter **78**. The logic HIGH turns on the transistor switch **80** enabling the LED **82** to conduct through the transistor switch **80**. The conducting of the LED **82** results in a red light indication that

a failure of the solar fluid to circulate is present in the system.

When sunlight is present, and the third sensor or switch **16** is closed, or solar fluid is not flowing and the fourth sensor or switch **18** is open, or both, the output of the NAND gate **64** is a logic HIGH so the output of NAND gate **68** is LOW and the output of NAND gate **70** is HIGH so that the input to the transistor switch **72** is a logic HIGH enabling a green indication to be provided by the LED **74**. Conversely, the logic HIGH output from the NAND gate **64** results in a logic LOW input to the NAND gate **76**. This logic LOW input results in a logic LOW input to the transistor switch **80** preventing any conducting through the LED **82**, and no red light indication results.

For drainback systems, in determining whether a failure to shut down is present, the jumpers **126** and **130** are removed and not used while the jumper **128** is used. The jumper **130** is located between two terminals of the fifth sensor or switch **20**. Additionally, the fourth sensor or switch **18** is maintained in its open position. Consequently, in the drainback system, this predetermined fault occurs when the presence of water is detected and sunlight is not present. Specifically, when sunlight is not present, the third sensor or switch **16** is open causing a logic HIGH input to the NAND gate **64**. When water is also present, the fifth sensor or switch **20** is closed thereby inputting a logic LOW to the Inverter **65**. The Inverter **65** outputs a logic HIGH to the NAND gate **64**. With both inputs to the NAND gate **64** being a logic HIGH, a logic LOW is outputted therefrom to NAND gate **68** of flip-flop **66**. The output of NAND gate **70** of flip-flop **66** is also a logic LOW because of the logic input thereto. This logic NAND gate **70** of flip-flop **66** causes the transistor switch **72** to turn off thereby preventing conduction through the LED **74** and extinguishing the green light indication provided by the LED **74**. Conversely, the output of the NAND gate **68** is a logic HIGH resulting in a logic LOW output from the NAND gate **76**. This output is inverted to a logic HIGH by the Inverter **78**. The logic HIGH turns on the transistor switch **80** enabling the LED **82** to conduct through the transistor **80**. The conducting of the LED **82** results in a red light indication that a failure of night time circulation is present in the drainback system.

When sunlight is present so that the third sensor or switch **16** is closed and the fifth sensor **20** is open, the output of the NAND gate **64** is a logic HIGH so that the input to the transistor switch **72** is a logic HIGH enabling a green indication to be provided by the LED **74**. Conversely, the logic HIGH output from the NAND gate **64** results in a logic LOW input to the NAND gate **76**. This logic LOW input results in a logic LOW input to the transistor switch **80** preventing any conduction through the LED **82**.

The predetermined fault identified as a failure of the system to be protected from freezing is also determined differently under the various solar systems. In the antifreeze system, the embodiment of FIG. **2** is modified by substituting the eighth sensor or switch **26** for the sixth sensor or switch **22**, by removing the jumper **128**, by including the jumpers **126** and **130**, and by including the jumper **132** located between the sensor **26** and the NAND gate **84**. With this configuration, when the eighth sensor or hydrometer switch **26** outputs a signal indicating that the specific gravity of the antifreeze is equal to or has decreased below a predetermined value, the hydrometer switch **26** is open and outputs a logic HIGH to the NAND gate **84**. Because the jumper **130** results in a logic LOW input to the Inverter **65**, a second logic HIGH is inputted to the NAND gate **84** from the Inverter **65**. Since the inputs to the NAND gate **84** are both a logic HIGH, the output therefrom is a logic LOW. This logic LOW, through the flip-flop **86**, results in a logic LOW input to the transistor switch **92** thereby turning off the transistor **92**. Because the transistor **92** is turned off, the LED **94** cannot conduct and the green light provided thereby is extinguished. Conversely, the logic HIGH output from the NAND gate **88** results in a logic HIGH input to the NAND gate **96**. This logic HIGH input results in a logic LOW input to Inverter **98** which results in a logic HIGH to the input to transistor switch **100** which turns it on and causes the LED **102** to conduct thereby providing a red indication that this failure exists.

When the hydrometer switch **26** is closed indicating a solar fluid specific gravity above a predetermined value, a logic LOW is inputted to the NAND gate **84** and a logic HIGH is outputted therefrom. As a result, a logic HIGH is inputted to the transistor switch **92** thereby enabling the LED **94** to conduct. In this state, the LED **94** provides a green indication that this predetermined fault is not present. Conversely, the logic HIGH output from the NAND gate **84** results in a logic LOW input to the NAND gate **96** and the transistor switch **100**. This logic LOW input to the transistor switch **100** causes the LED **102** to be turned off indicating also that this failure does not presently exist in the system.

In conjunction with recirculation systems, the embodiment of FIG. **2** relating to the freeze protection fault is modified in that the jumper **130** is included so that a logic HIGH is always inputted from the Inverter **65** to the NAND gate **84**. As with anitfreeze systems, jumper **126** is kept in place while jumper **128** is removed. This configuration is used because in a recirculation system water is continuously present in the pipe and collectors and need not be monitored. Additionally, the jumper **132** is removed so that the temperature of the pipe can be sensed.

In operation of the recirculation system therefore, when the sixth sensor or switch **22** is open indicating that the temperature of the collector is equal to or less than a predetermined temperature, or when the temperature of the pipe is less than or equal to a predetermined temperature, the respective switches **22**, **24**, or both, is opened thereby inputting a logic HIGH to the NAND gate **84**. Similar to the operation of the logic in connection with the antifreeze system, the two logic HIGH inputs cause the LED **102** to conduct thereby providing a red indication, and further prevent conduction through the LED **94** thereby extinguishing the green light provided by the LED **94**.

In water drainback and draindown systems, the failure of the system to be protected from freezing is monitored by using the outputs from the fifth sensor or switch **20**, the sixth sensor or switch **22**, and the seventh sensor or switch **24**. With reference to the embodiment of FIG. **2**, in such a case, the jumpers **126**, **130**, and **132** are removed while jumper **128** remains.

When water is detected as being present, the switch **20** is closed thereby resulting in a logic HIGH being inputted to the NAND gate **84**, and when either the switch **22** is open because the collector temperature is equal to or less than a predetermined temperature, or the switch **24** is open because the pipe temperature is

equal to or less than a predetermined temperature, the second input to the NAND gate **84** is also a logic HIGH. As with the antifreeze and recirculation systems, with both inputs to the NAND gate **84** being a logic HIGH, the LED **102** conducts thereby providing a red fault indication while the LED **94** is extinguished.

When water is not present, or the collector temperature is above the predetermined low temperature and the pipe temperature is above the predetermined low temperature, or both, both inputs to the NAND gate **84** are logic LOWs. Consequently, the output from the NAND gate **84** is a logic HIGH. This logic HIGH output results in a logic HIGH input to the transistor switch **92** thereby enabling the LED **94** to conduct. In this state, the LED **94** provides a green indication that this predetermined fault is not present. Conversely, the logic HIGH output from the NAND gate **84** results in a logic LOW input to the NAND gate **96** and the transistor switch **100**. This logic LOW input to the transistor **100** causes the LED **102** to be turned off also indicating that this failure does not presently exist in the system.

The detection of the failure relating to a high tank temperature, a predetermined magnitude of corrosion being reached or exceeded, or a predetermined magnitude of scaling being reached or exceeded occurs or exists when a logic HIGH is inputted to the NAND gate **106**. A logic HIGH is generated when the ninth sensor or switch **28** or the tenth sensor or switch **30** or the eleventh sensor or switch **32** opens as a result of sensing one or more of these predetermined conditions. In such a case, the output of the NAND gate **106** is a logic LOW resulting in a logic LOW output from NAND gate **112** of flip-flop **108**. This logic LOW causes the transistor switch **114** to be turned off thereby extinguishing the green indication of the LED **116** because it is no longer in its conducting state. Conversely, the logic LOW output from the NAND gate **106** results in a logic HIGH input to the NAND gate **118**. As a result, a logic LOW is outputted from the NAND gate **118** and a logic HIGH is outputted from the Inverter **120**. This logic HIGH turns on the transistor switch **122** enabling the LED **124** to conduct and provide a red indication. This red light indicates that one of the three aforesaid predetermined conditions is present thereby resulting in the existence of the predetermined failure.

When the tank temperature is below the predetermined high temperature, and the predetermined magnitude of corrosion and scaling have not been reached or exceeded, a logic LOW is inputted to the NAND gate **106** resulting in a logic HIGH output therefrom. This logic HIGH causes a logic HIGH to be outputted by NAND gate **112** of flip-flop **108**. This logic HIGH, in turn, causes the transistor switch **114** to be turned on providing a conducting path for the LED **116**. As a result, a green light indication is provided indicating that this predetermined failure is not present. Conversely, the logic HIGH output from the NAND gate **106** results in a logic HIGH output from the NAND gate **118** so that a logic LOW is inputted to the transistor switch **122**. Because of the logic LOW input, the transistor switch **122** is maintained in its off condition, and the LED **124** is in its nonconducting state.

In a preferred embodiment, a timing circuit **134** is also provided. The output of the timing circuit **134** is inputted to each of the NAND gates **56, 76, 96, 118**. The timing circuit **134** is included so that, when one or more predetermined faults or failures occur, the appropriate LED **62, 82, 102, 124** gives a red flashing signal. The flashing signal is achieved because the output of the timing circuit **134** continuously alternates between a logic LOW and a logic HIGH. Consequently, during the time the output of the timing circuit **134** is a logic HIGH, and a predetermined fault exists, the appropriate LEDS **62, 82, 102, 124** will conduct.

Additionally, in the embodiment of FIG. **2**, a reset switch **136** is electrically connected to NAND gates **50, 70, 90, 112**. When the reset switch **136** is activated or closed, each of the LEDs **54, 74, 94, 116** conducts to provide a green light indication. When the reset switch **136** is then released or opened, unless a predetermined fault or failure is present in the system, the LEDs **54, 74, 94, 116** maintain their conducting state providing a green light indication.

From this it is understood that the flip-flops **46, 66, 86, 108** act to maintain a flashing red light fault indication after the fault is no longer present so that the user is made aware that the fault occurred, and in the case in which the fault no longer exists, a manual resetting using reset switch **136** results in the termination of the flashing red and the providing of a green indication.

In addition, in the embodiment of FIG. **2**, test switches **131, 138, 140** are included for testing the operation of the logic circuit **34** and the indicators **36–42**. These latter switches enable the user to apply a logic HIGH to each of the inputs to the NAND gates **44, 64, 84, 106**. When the test switches **131, 138, 140** are positioned to provide logic HIGHs to each of the inputs to the NAND gates **44, 64, 84, 106**, the LEDs **62, 82, 102, 124**, associated with providing a flashing red fault indication, should periodically conduct if the system is operating properly. Conversely, the LEDs **54, 74, 94, 116** should not conduct and be extinguished, if the system is operating properly.

From the foregoing, it should be understood that although the embodiment of FIG. **2** can be adapted to function with each type of active solar system, an embodiment can be provided for use with only one of the aforementioned solar systems. For example, to detect predetermined failures in an antifreeze system, fifth sensor **20**, sixth sensor **22**, and seventh sensor **24** would not be included. Additionally, Inverter **65**, together with the electrical connection from the output thereof to the NAND gate **64**, would not be provided.

Having described the invention with particular reference to certain embodiments thereof, it will be obvious that various changes and modifications may be made therein without parting from the spirit and scope of the invention, as defined in the appended claims.

The embodiments of the invention in which an exclusive property or privilege is claimed are defined as follows:

1. An apparatus for detecting predetermined faults in a variety of active, different solar systems, each of said different solar systems using a heat transfer fluid and having a tank for receiving fluid or a heat exchanger to transfer heat from the heat transfer fluid to a tank, and at least one collector and one pipe through which fluid flows, said different solar systems each having different predetermined operating conditions associated with a given type of fault, comprising:

a. a plurality of sensing means for sensing the presence of different predetermined operating conditions associated with each of the solar systems, each of said sensing means including a switch that changes in state in response to a change in a prede-

termined operating condition in at least one of said fluid, tank or heat exchanger, collector, and pipe;

b. means in communication with each of said sensing means for determining whether one or more predetermined faults have occurred in one of said solar systems, said means for determining including combining means, said combining means including logic gates at least one of which is actuated by logic gate actuating voltages via the associated states of at least two of said switches to produce an output signal indicative of whether a predetermined fault is present in the one solar system; and

c. indicating means responsive to said output signal for indicating the presence and identity of said one predetermined fault in said one solar system.

2. An apparatus, as claimed in claim 1, wherein:

said plurality of sensing means includes a first sensing means for sensing the temperature of the collector, and a second sensing means for sensing the temperature of the tank, and said combining means being responsive to the outputs of said first sensing means and said second sensing means, at the same time, for determining whether the temperature of the collector is greater than a predetermined temperature and whether the temperature of the tank is less than a predetermined temperature to determine whether a failure to circulate fluid is present in the system.

3. An apparatus, as claimed in claim 1, wherein:

said plurality of sensing means includes a third sensing means for sensing the presence of sunlight and a fourth sensing means for sensing the flow of fluid in the collector or pipe, and said combining means being responsive to the outputs of said third sensing means and said fourth sensing means, at the same time, to determine whether a failure to shut down is present in the system.

4. An apparatus, as claimed in claim 1, wherein:

said plurality of sensing means includes third sensing means for sensing the presence of sunlight and a fifth sensing means for sensing the presence of fluid in the collector or pipe, and said combining means being responsive to the outputs of said third sensing means and said fifth sensing means, at the same time, to determine whether a failure to shut down is present in the system.

5. An apparatus, as claimed in claim 1, wherein:

said plurality of sensing means includes fifth sensing means for sensing the presence of fluid in the collector or pipe, sixth sensing means for sensing the temperature of the collector, and seventh sensing means for sensing the temperature of the pipe, and said combining means being responsive to the outputs of said fifth sensing means, said sixth sensing means, and said seventh sensing means, at the same time, to determine whether a failure to protect the system from freezing is present.

6. An apparatus, as claimed in claim 1, wherein:

said plurality of sensing means includes a sixth sensing means for sensing the temperature of the collector or a seventh temperature sensing means for sensing the temperature of the pipe.

7. An apparatus, as claimed in claim 1, wherein:

said plurality of sensing means includes an eighth sensing means for sensing the specific gravity of the solar fluid.

8. An apparatus, as claimed in claim 1, wherein:

said plurality of sensing means includes ninth sensing means for sensing whether the temperature of the tank is equal to or greater than a predetermined temperature to determine whether a failure to protect the system from overheating is present.

9. An apparatus, as claimed in claim 1, wherein:

said plurality of sensing means includes tenth sensing means for sensing whether at least a predetermined amount of scaling is present in the pipe to determine whether a failure due to excessive scaling is present in the system.

10. An apparatus, as claimed in claim 1, wherein:

said plurality of sensing means includes eleventh sensing means for sensing whether at least a predetermined amount of corrosion is present in the pipe to determine whether a failure due to excessive corrosion is present in the system.

11. An apparatus, as claimed in claim 1, wherein:

said plurality of sensing means includes ninth sensing means for sensing whether the temperature of the tank is equal to or greater than a predetermined temperature, tenth sensing means for sensing whether at least a predetermined amount of scaling is present in the pipe, and eleventh sensing means for sensing whether at least a predetermined amount of corrosion is present in the pipe, and said combining means being responsive to said ninth sensing means, said tenth sensing means, and said eleventh sensing means, for determining whether a failure to protect the system for overheating is present, or whether a failure due to excessive scaling is present in the system, or whether a failure due to excessive corrosion is present in the system.

12. An apparatus, as claimed in claim 1, wherein:

said indicating means includes means for indicating that said one predetermined fault is not present in said one solar system.

13. An apparatus, as claimed in claim 1, wherein:

said combining means includes a NAND gate.

14. An apparatus, as claimed in claim 1, wherein:

the presence of one of said predetermined faults is determined separately from the determination of the presence of each of said other predetermined faults, and an indication is separately provided for identifying each of said predetermined faults.

15. An apparatus, as claimed in claim 1, wherein:

said means for determining includes means for maintaining an indication that a predetermined fault occurred, even after said predetermined fault is no longer present.

16. An apparatus, as claimed in claim 15, wherein:

said means for determining includes reset means for removing said predetermined fault indication.

17. An apparatus, as claimed in claim 1, further including:

testing means for testing the operation of said indicating means to determine whether said indicating means provides an indication of the presence of a predetermined fault.

18. A method for detecting the presence of predetermined faults in a variety of active, different solar systems, each of said different solar systems using a heat transfer fluid and having a tank for receiving fluid or a heat exchanger to transfer heat from the heat transfer fluid to a tank, and at least one collector, and at least one pipe, said different solar systems each having different predetermined operating conditions associated with a given type of fault, said method comprising:

a. sensing whether a plurality of different predetermined operating conditions associated with the operation of one solar system are present using switches that change in state in response to a change in a predetermined operating condition of at least one of said fluid, tank or heat exchanger, collector, and pipe;

b. combining at least two of the different predetermined sensed operating conditions of said one solar system to produce an output signal indicative of whether a predetermined fault has occurred in said one solar system based on the combining of said two of the predetermined sensed operating conditions using logic gates at least one of which is actuated by logic gate actuating voltages via the associated states of at least two of said switches to produce said output signal; and

c. indicating in response to the output signal the presence and identity of said one predetermined fault in said one solar system.

19. A method, as claimed in claim **18**, wherein:
said sensing step includes the sensing of the temperature of the collector and the temperature of the tank.

20. A method, as claimed in claim **19**, wherein:
said combining step includes combining a signal relating to the temperature of the collector with a signal relating to the temperature of the tank to determine whether a failure to circulate solar fluid is present in the system.

21. A method, as claimed in claim **18**, wherein:
said sensing step includes sensing whether sunlight is present and sensing whether fluid is present in the collector or pipe.

22. A method, as claimed in claim **21**, wherein:
said combining step includes combining a signal relating to whether sunlight is present with a signal relating to whether fluid is present in the collector or pipe to determine whether a failure to shut down the system is present.

23. A method, as claimed in claim **18**, wherein:
said sensing step includes sensing whether sunlight is present and sensing whether solar fluid is flowing in the collector or pipe.

24. A method, as claimed in claim **23**, wherein:
said combining step includes combining a signal relating to whether sunlight is present with a signal relating to whether solar fluid is flowing in the collector or pipe to determine whether a failure to shut down the system is present.

25. A method, as claimed in claim **18**, wherein:
said sensing step includes the steps of sensing the presence of solar fluid in the collector or pipe, sensing the temperature of the pipe, and sensing the temperature of the collector.

26. A method, as claimed in claim **25**, wherein:
said combining step includes combining a signal relating to whether solar fluid is present in the collector or pipe with a signal relating to the temperature of the pipe to determine whether a failure to protect the system from freezing is present.

27. A method, as claimed in claim **25**, wherein:
said combining step includes combining a signal relating to whether solar fluid is present in the collector or the pipe with a signal relating to the temperature of the collector to determine whether a failure to protect the system from freezing is present.

28. A method, as claimed in claim **18**, wherein:
said sensing step includes the step of sensing the specific gravity of the fluid.

29. A method, as claimed in claim **18**, wherein:
said sensing step includes the sensing of whether a predetermined amount of scaling is present in the system.

30. A method, as claimed in claim **18**, wherein:
said sensing step includes the sensing of whether a predetermined amount of corrosion is present in the system.

31. A method, as claimed in claim **18**, wherein:
said indicating step includes providing an indication that a predetermined fault is not present in the system when said predetermined fault is not present.

* * * * *