United States Patent [19]

Ortega

[11] **4,424,800**

[45] **Jan. 10, 1984**

[54] **THERMAL CONTROL SYSTEM AND METHOD FOR A PASSIVE SOLAR STORAGE WALL**

[75] Inventor: **Joseph K. E. Ortega,** Westminister, Colo.

[73] Assignee: **The United States of America as represented by the Department of Energy,** Washington, D.C.

[21] Appl. No.: **282,286**

[22] Filed: **Jul. 10, 1981**

[51] **Int. Cl.**[3] **F24J 3/02**

[52] **U.S. Cl.** **126/419;** 126/429; 126/430; 126/436

[58] **Field of Search** 126/419, 422, 430, 436, 126/417, 441, 400, 429, 431; 165/12, 18

[56] **References Cited**

U.S. PATENT DOCUMENTS

2,595,905	5/1952	Telkes	126/419
2,767,118	10/1956	Gaymont	165/12
2,853,205	9/1958	Boyd	165/12
2,969,918	1/1961	Phelps	126/419
3,102,532	9/1963	Shoemaker	126/441
3,860,055	1/1975	Wild	126/419
3,983,928	10/1976	Barnes	165/12
4,002,159	1/1977	Angilletta	126/429
4,059,226	11/1977	Atkinson	126/429
4,201,188	5/1980	Cummings	126/429
4,219,008	8/1980	Schultz	126/422
4,223,663	9/1980	Carmichael	126/430
4,248,375	2/1981	Whitney	165/12
4,250,871	2/1981	Milburn	126/436
4,257,477	3/1981	Maloney	126/430
4,277,018	7/1981	Nelson	165/12
4,280,480	7/1981	Raposo	126/436
4,290,416	9/1981	Maloney	126/400
4,301,787	11/1981	Rice	126/429
4,327,795	5/1982	Wheeler	126/429
4,338,917	7/1982	Keller	126/436

FOREIGN PATENT DOCUMENTS

2452068	11/1980	France	126/430

Primary Examiner—Daniel J. O'Connor

Attorney, Agent, or Firm—John L. Isaac; Jeannette M. Walder; Richard G. Besha

[57] **ABSTRACT**

The invention provides a system and method for controlling the storing and release of thermal energy from a thermal storage wall wherein said wall is capable of storing thermal energy from insolation of solar radiation. The system and method includes a device such as a plurality of louvers spaced a predetermined distance from the thermal wall for regulating the release of thermal energy from the thermal wall. This regulating device is made from a material which is substantially transparent to the incoming solar radiation so that when it is in any operative position, the thermal storage wall substantially receives all of the impacting solar radiation. The material in the regulating device is further capable of being substantially opaque to thermal energy so that when the device is substantially closed, thermal release of energy from the storage wall is substantially minimized. An adjustment device is interconnected with the regulating mechanism for selectively opening and closing it in order to regulate the release of thermal energy from the wall.

14 Claims, 14 Drawing Figures

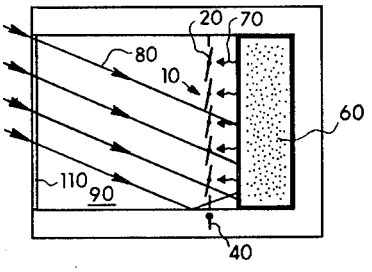

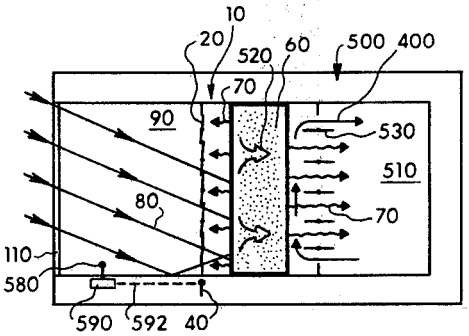

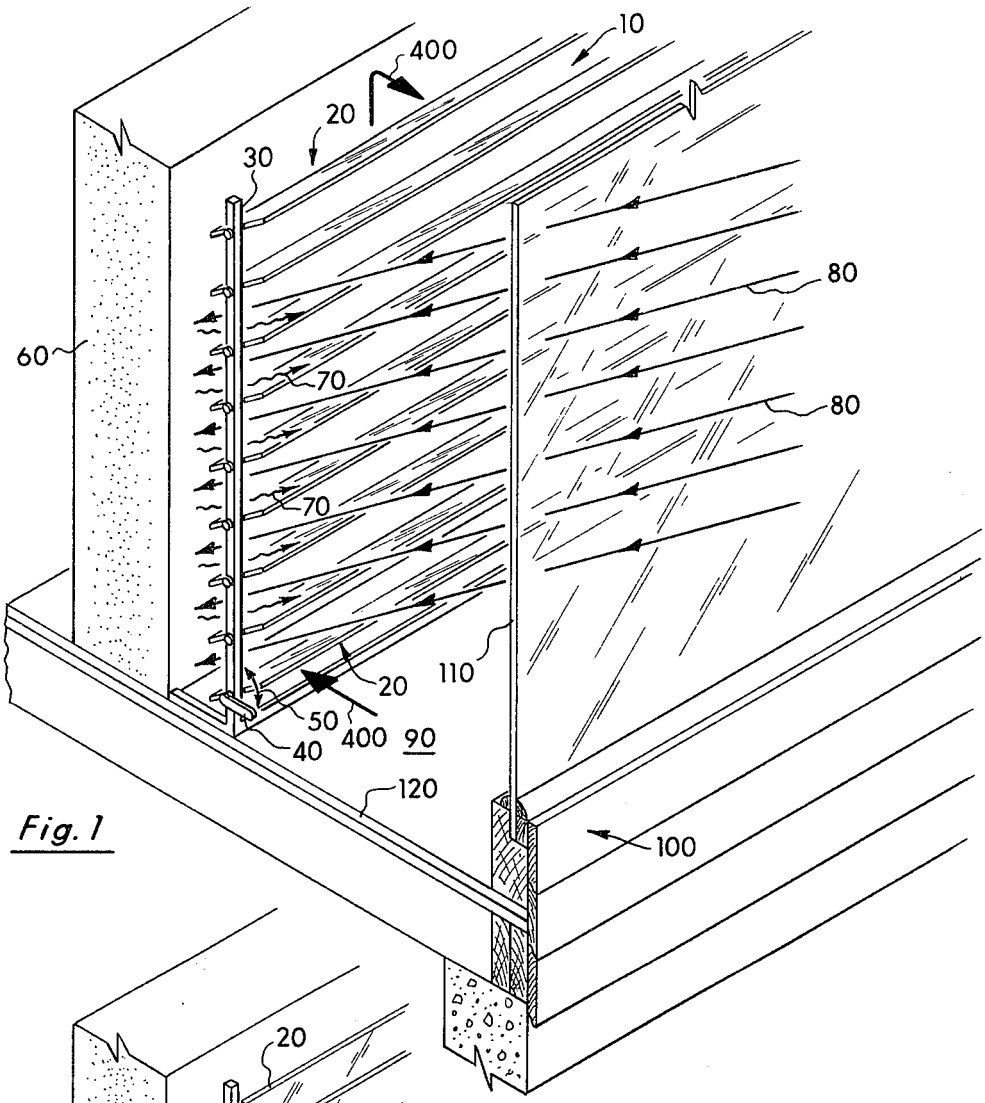

Fig. 1

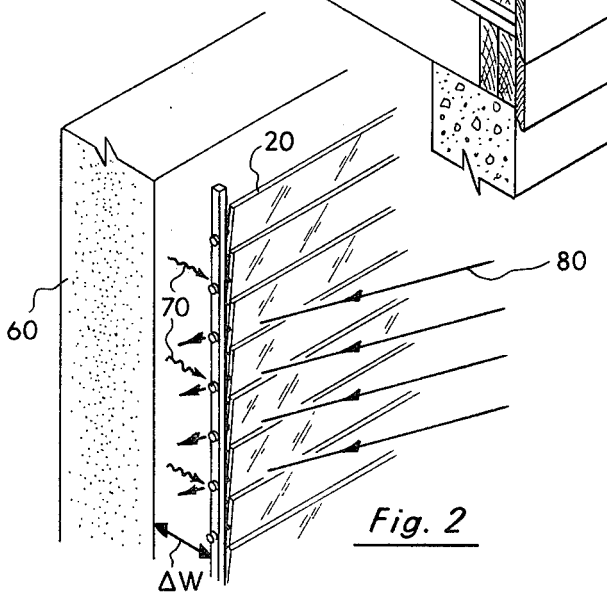

Fig. 2

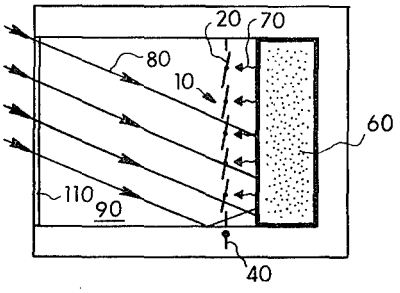

Fig. 3

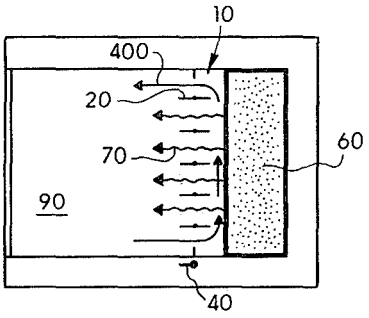

Fig. 4

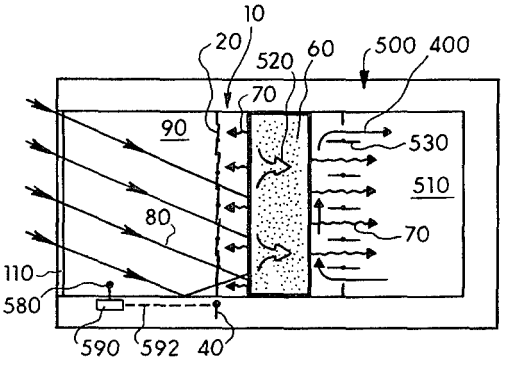

Fig. 5

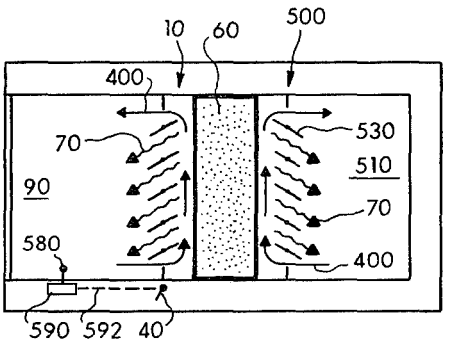

Fig. 6

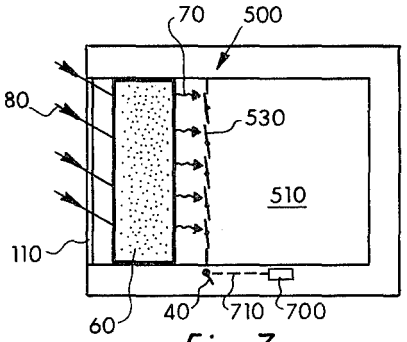

Fig. 7

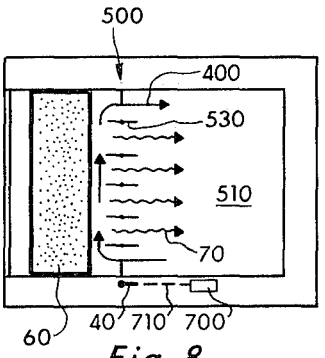

Fig. 8

Fig. 9

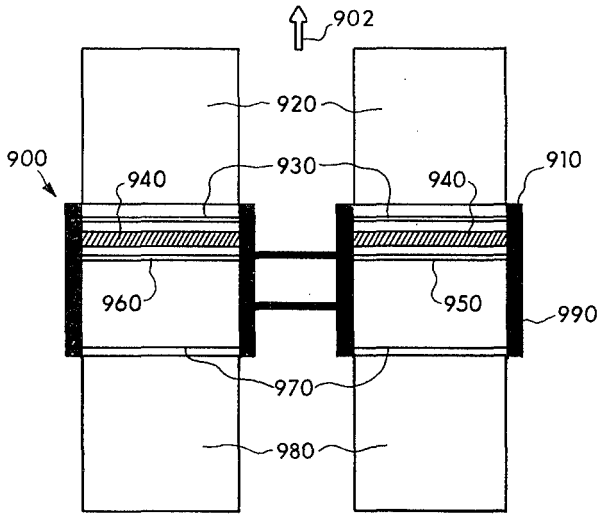

Fig. 10

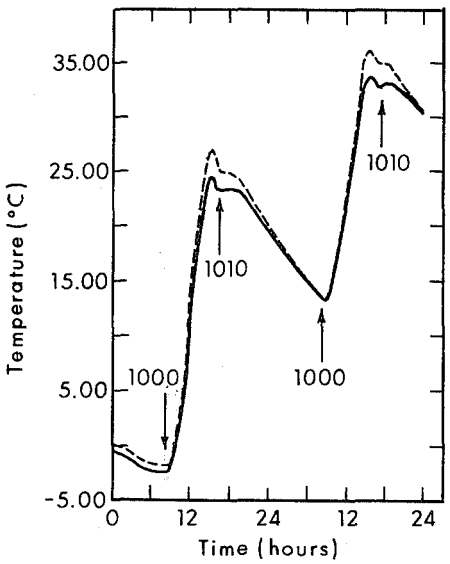

Fig. 11

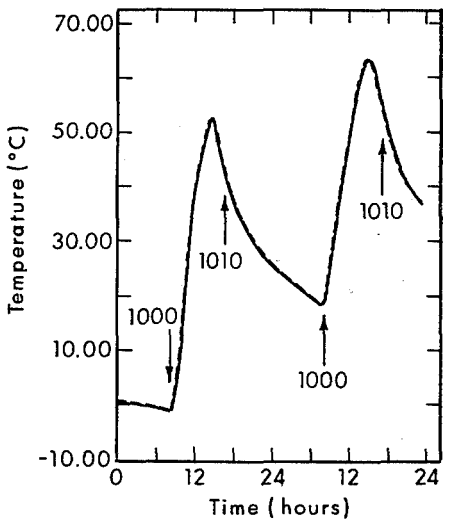

Fig. 12

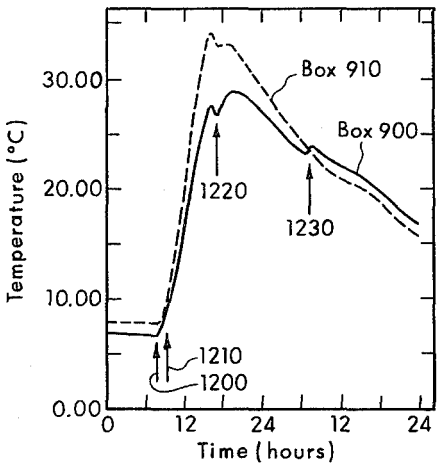

Fig. 13

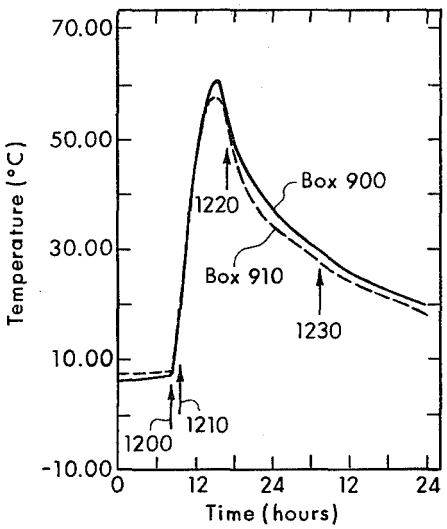

Fig. 14

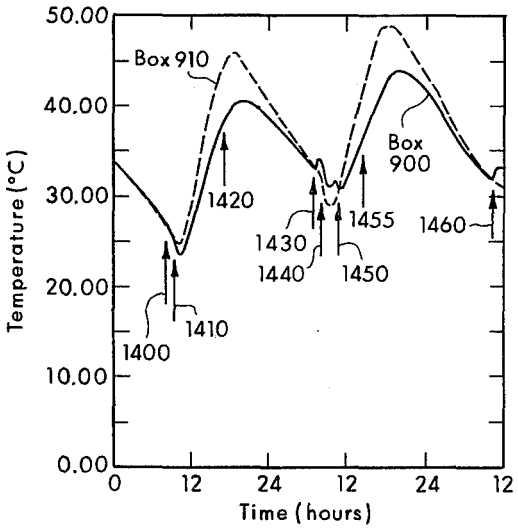

THERMAL CONTROL SYSTEM AND METHOD FOR A PASSIVE SOLAR STORAGE WALL

The United States Government has rights to this invention pursuant to Contract No. EG-77-C-01-4042 between the U.S. Department of Energy and the Solar Energy Research Institute, a division of the Midwest Research Institute.

BACKGROUND OF THE INVENTION

1. Field of the Invention

The present invention relates to a passive solar energy system and more particularly to a passive thermal storage system. Specifically, the present invention relates to a system and method for controlling the charging of a thermal storage wall through insolation of solar energy and through the release of thermal energy from the thermal storage wall.

2. Description of the Prior Art

The use of solar insolation for heating buildings of passive solar design has increased significantly in the past several years due to the substantial savings of such systems over heating systems in conventional buildings using fossil fuel energy. Although a number of different and useful techniques have been developed for use in passive solar design to increase the storage of solar radiation during the daylight hours, suitable techniques for regulating the control of this stored solar radiation (in the form of thermal energy) are not truly satisfactory. A common technique for storing solar radiation in the form of thermal energy is to use a masonry, such as brick, concrete, adobe, or stone, or a water wall or cylinder such as what has been commonly termed the Trombe wall. Thermal energy stored in such walls is released by free convection air currents and by thermal radiation.

Conventionally, once a solar passive building is designed and constructed, the thermal behavior of that building is controlled primarily by its external thermal environment. Without using any supplementary or auxiliary heat, the average room temperatures of such solar passive buildings are higher during the day when insolation occurs and lower at night and in the early morning hours. The variations between the high and the low temperatures in each room is a function of the building design and the magnitude of change in weather conditions. Often the difference of variation can be large, such as 15° F. or greater.

Most passive solar buildings are constructed as a single zone wherein the building is typically one room deep with the south end of each room designed to receive solar radiation through typically glass enclosed openings. In such passive building designs, rear or back rooms, behind the first room, cannot be effectively heated by solar radiation. One solution to this problem has been to use free convection in order to transfer heat from the front room or zone to the back room or zone. Free air, however, has a small heat capacity, and difficulties are generally encountered in controlling and setting up suitable convection patterns. Furthermore, heat transferred through the storage walls (i.e., interzonal transfer) is limited since masonry materials are especially poor thermal conductors.

In some techniques, regulation of heat transfer from the storage wall has been accomplished by use of a fan. The use of such a device, however, has limitations. A fan generally helps to improve heat transfer but it cannot provide the additional impedance needed during charging of the thermal walls (i.e., during the day) to prevent overheating of the front room and to improve storage wall performance.

Another technique is to employ the use of an auxiliary heat source to supplement the temperature of the rooms during the night and early morning hours.

Another approach has been to utilize moveable insulation and louver shading devices to provide a degree of passive thermal control. These types of shading devices affect the degree by which the thermal wall is charged by solar insolation. Such techniques, however, do not control the release of thermal energy from the storage wall into the air space of the room. Furthermore, shading devices do not provide directional or graduated control over the discharge of thermal energy and fail to improve interzonal heat transfer from a front room to a back room or improve the heat storage performance of the storage wall itself.

SUMMARY OF THE INVENTION

Therefore, it is one object of the present invention to provide a system and method for reducing overheating of a passive solar room during charging of a storage wall situated therein.

It is another object of the present invention to provide a system and method for improving thermal storage performance of a storage wall in a passive solar room.

It is a further object of the present invention to provide graduated control over the release of stored thermal energy from a storage wall into a passive solar room.

Yet another object of the present invention is to provide improved interzonal heat transfer from one side of a thermal storage wall to the other.

Accordingly, the thermal control system of the present invention provides a solution to the above described problems and includes a regulating device, preferably in the form of a plurality of louvers, spaced a predetermined distance from the surface of a thermal wall exposed to solar radiation. A mechanical device is provided for selectively opening and closing the louvers under a temporal control, a manual control, a thermostatic control, or a combination thereof. The louvers are preferably made from a material, such as glass, which is substantially transparent to solar radiation. This enables the thermal storage wall to be charged through insolation of solar radiation whether or not the louvers are fully opened, fully closed, or in any position therebetween.

The louver material is further substantially opaque to the release of thermal energy when the louvers are fully closed. Additionally, when the louvers are fully closed, thermal release from the storage walls due to free air convection is substantially minimized, and when the louvers are selectively and gradually opened, the thermal release due to both radiation from the wall and due to free convection can be selectively directed into the room. The provision of the louvers in front of the thermal wall also increases the storage of thermal energy per unit of incident solar radiation when the louvers are near or in the closed position, and provide for greater interzonal transfer of energy through the storage wall.

BRIEF DESCRIPTION OF THE DRAWINGS

The novel features which are believed to be characteristic of the present invention are set forth in the ap-

pended claims. The invention itself, however, together with further objects and attendant advantages thereof, will become apparent and best understood by reference to the following detailed description taken in connection with the accompanying drawings, setting forth by way of illustration and example certain embodiments of the invention in the several figures of which like reference numerals identify like elements, and in which:

FIG. **1** is a cut-away perspective view illustrating the thermal control system of the present invention in front of a room thermal wall being charged by incoming solar radiation;

FIG. **2** is a cut-away perspective view illustrating the thermal control system, as shown in FIG. **1**, in the fully closed position;

FIG. **3** is a schematic illustrating a direct gain/single zone mode of operation of the present invention during the daytime hours;

FIG. **4** is a schematic illustrating the thermal control system of the present invention, as shown in FIG. **3**, during night time operation;

FIG. **5** is a schematic illustrating the daytime operation of a direct gain/dual zone mode of operation using two thermal control systems of the present invention;

FIG. **6** is a schematic illustrating the arrangement shown in FIG. **5** during night time operation;

FIG. **7** is a schematic illustrating an indirect gain/single zone mode of operation during the daytime for the thermal control system of the present invention;

FIG. **8** is a schematic illustrating the thermal control system shown in FIG. **7** during night time operation;

FIG. **9** is a top planar schematic view of experimental and control boxes for testing the thermal control system of the present invention;

FIG. **10** is a graph illustrating the room temperature cycling of the experimental and control boxes of FIG. **9** over a two day period of operation;

FIG. **11** is a graph of the experimental and control boxes of FIG. **9** illustrating the temperature variations of the thermal wall over a two day period of operation;

FIG. **12** is a chart illustrating the experimental and control boxes of FIG. **9** over a two day period of operation for room temperature with the thermal control system of the present invention being operated;

FIG. **13** is a graph showing the storage wall temperature variations for the experimental and control boxes of FIG. **9** over a two day period of time during which the thermal control system of the present invention is operated; and

FIG. **14** is a graph illustrating room temperature variations with time for the experimental and control boxes of FIG. **9** with the thermal control system of the present invention being operated.

DETAILED DESCRIPTION OF THE PREFERRED EMBODIMENTS

Referring first to FIG. **1**, a thermal control system **10** of the present invention is shown, in the preferred embodiment, to include a plurality of louvers or pivotal slots **20** connected through a link **30** to an operating lever **40** which can move in the directions of the arrows **50**. The thermal control system **10** of the present invention is shown mounted substantially over and in front of a thermal storage or transfer wall **60** which may comprise, for example, a wall constructed of masonry or water. One purpose of the thermal control system of the present invention is to regulate the release of thermal energy, illustrated by arrows **70**, from the storage or transfer wall **60** which conventionally gains energy from solar radiation **80** from the sun through insolation.

As shown in FIG. **1**, the storage wall **60** can be conventionally mounted in a room **90** of a building **100**. The front of the building **100** includes a window **110** through which the solar radiation **80** is directed onto the thermal storage wall **60**. The building **100**, the window **110**, the floor of the building **120**, and the thermal storage or transfer wall **60** are well known and can be conventionally constructed. It is to be expressly understood that other applications of the present invention in structures such as greenhouses and the like could also be made.

The purpose of the thermal control system **10** of the present invention, as previously mentioned and as shown in FIGS. **1** and **2**, is to regulate the release of stored thermal energy from the thermal storage wall **60** into the room **90** of the building **100**. Such regulation occurs through the timed, manual, or thermostatically controlled operation of lever **40** to open or close the louvers **20**. The louvers **20** are constructed from material which is substantially transparent to the incoming solar radiation **80** in order to permit the rays **80** to charge the wall **60** when the louvers **20** are either partially opened, fully opened or closed. The material of louvers **20**, however, is also substantially opaque or nonconductive of the released thermal energy when the louvers **20** are closed. This release of thermal energy from wall **20** occurs by two mechanisms: free convection as illustrated by arrows **400**, and thermal radiation **70**. Hence, when the louvers **20** are fully opened by the lever **40**, the release of thermal energy from the wall **60** occurs at a maximum rate. On the other hand, when the louvers **20** are fully closed, as shown in FIG. **2**, the thermal energy from the storage wall **60** is contained in the wall **60** and in the space between the wall **60** and the louvers **20** which is designated by a width of ΔW. When the louvers **20** are in a closed position, release of thermal energy by free convection **400** and thermal radiation **70** is significantly minimized. Furthermore, when the louvers **20** are fully closed, the temperature of the room **90** is lowered, and more thermal energy is stored in the storage wall **60** per unit of incident solar radiation than without the use of the thermal control system **10** of the present invention.

When the louvers **20** are fully opened by the lever **40**, the incoming solar radiation **80** impacts on the thermal storage wall **60**, and stored thermal energy is released by radiation **60** and free convection **400** into the room **90** at a maximum rate. Regulation of the lever **40** (manually or automatically) effectuates regulation of the release of the thermal energy from the wall **60** and, hence, when the louvers **20** are fully closed, a minimum of thermal energy from the storage wall **60** is released into the room **90**. The operation of the lever **40** provides regulation between the maximum and minimum rates of thermal energy release. Furthermore, operation of the lever **40** provides a significant directional control for the release of the stored thermal energy.

When a user of the room **90** desires more heat in order to maintain the room at a comfortable level, the user (or a thermostatic or timed device) operates the lever **40** to open the louvers **20** to provide increased thermal energy release (**70** and **400**) into the room **90**. Likewise, when less heat is needed, the user of the room **90** may activate the lever **40** in the opposite direction to more fully close the louvers **20**.

It is to be appreciated that sliding, hinged, or removable panels, parallel and adjacent to the storage wall **60**,

but not in contact with the wall, and made from the same material as the louvers **20** can provide the same type of regulation over release of the thermal energy from the wall **60**. The selective opening of such louvers or panels essentially provides a variable impedance to heat transfer from the storage wall **60** to the room **90**. A high impedance is provided, in one instance, by reducing radiation exchange between the wall and the room, and, in the second instance, by reducing free convection into the room. A low impedance occurs through opening the louvers **20** to provide an increased release of thermal energy.

It is to be further appreciated that a number of conventional arrangements can be utilized in the thermal control of the present invention to operate the opening and closing of the louvers **20** or similar panels under both a manual or an automatic control as will be more fully discussed below.

Referring now to FIGS. **3** through **8**, the thermal control system of the present invention is shown in applications exhibiting three different modes of operation. FIGS. **3** and **4** illustrate the day and night use of the thermal control system **10** of the present invention in a direct gain/single zone mode operation. FIGS. **5** and **6** illustrate the day and night use of the thermal control system **10** of the present invention in a direct gain/dual zone mode of operation. Finally, FIGS. **7** and **8** illustrate the day and night use of the thermal control system **10** of the present invention in an indirect gain/-single zone mode of operation. Each of these modes of operation is discussed in more detail below.

In FIGS. **3** and **4**, the use of the thermal control system **10** of the present invention is shown in a direct gain/single zone mode of operation. FIG. **3** illustrates a daytime operation whereas FIG. **4** shows a night time operation. During the day, the louvers **20** are closed and, in passive solar buildings, sufficient thermal radiation is allowed into the building to provide adequate heating of the building without use of thermal heat release from the storage wall **60**. Hence, the thermal control system **10** is generally in the fully closed position thereby entrapping the thermal energy within the dead air space ΔW (FIG. 2) as well as increasing thermal storage in the storage wall **60**. In the closed position, the louvers **20** of the thermal control system **10** of the present invention are opaque to the thermal energy **70** which is of a significantly longer wavelength than the incoming solar radiation **80** and, therefore, more energy is stored. Hence, a solar charging of the thermal storage wall **60** occurs during the period of time (daylight) in which the louvers **20** are closed.

At night time, and as shown in FIG. **4**, the louvers **20** are fully opened, and the thermal radiation **70** is allowed to dissipate into the room **90** at a rate determined by the graduated degree which the louvers **20** are opened.

Hence, and as shown in FIGS. **3** and **4**, the thermal control system **20** of the present invention in a direct gain/single zone approach provides three definite advantages. First, during the daytime hours when additional heat is not needed in the room **90** because the room temperature is sufficiently high from incoming solar radiation and higher outside ambient temperature, thermal energy storage per unit incident solar energy in the wall **60** is increased. Second, the stored thermal energy can be released into the room **90** during the night and early morning hours by free convection **400** and by radiation **70** when there is no insolation and when the outside ambient temperatures are lower. Finally, the amount of heat released into the room can be controlled to suit the user's needs, at any time, to accommodate varying outside ambient temperatures and changing environmental conditions during the day-night cycle.

When the louvers **20** are opened, a free air circulation path **400** occurs in room **90** and in the air space (ΔW) between the thermal control system of the present invention and the wall **60** so as to remove thermal energy from the face of the wall **60**. When the louvers **20** are closed, such a circulation path **400** is prevented.

Referring to FIGS. **5** and **6**, the thermal control system of the present invention is shown in a direct gain/-two zone mode of operation. In this mode of operation, the first thermal control system **20** is used in a front room **90**, and a second thermal control system **500** is utilized in a rear room **510**. As shown in FIGS. **5** and **6**, the room **90** and the thermal control system **20** associated therewith operates in the same fashion as set forth in FIGS. **3** and **4**. What is added in FIGS. **5** and **6** is the provision to heat the room **510**, representing a second heating zone, during the daytime as shown in FIG. **5** and during the night time as shown in FIG. **6**. The arrangement shown in FIGS. **5** and **6** improves interzonal heat transfer (i.e., the transfer of heat from the room **90** to the room **510**). As shown in FIG. **5**, with the louvers **20** of the thermal control system **10** closed, heat builds up in the dead air space and in the thermal mass **60**. This buildup of heat is delivered back through the thermal mass **60** as shown by the arrows **520** for radiation into the back room **510**. Hence, the thermal control system **20** serves to charge the mass **60** and to drive heat rearwardly in the wall into a back or rear room **510**. Of course, the louvers **530** can also be in a closed position if radiated heat **70** is not immediately required in the back room **510**, thereby permitting even greater thermal storage in the wall **60** for subsequent use in the rooms **90** and **510**.

At night time, as shown in FIG. **6**, the louvers **20** and **530** for the systems **10** and **500** can be adjustably opened in various degrees to provide variable amounts of thermal energy release into the rooms **90** and/or **510**. Of course, the louvers **530** in the thermal control system **500** do not need to be transparent to solar radiation since solar radiation does not impinge on the thermal mass wall **60** from that direction. Such louvers **530**, however, must be opaque (i.e., non-transmittive thereof) to thermal radiation. In this approach, interzonal (i.e., from the front room **90** through the wall **60** and into the back room **510**) transfer of thermal energy occurs.

In FIGS. **7** and **8**, an indirect gain/single zone mode of operation is ilustrated for day and night operation. In FIG. **7**, the solar radiation insolates thermal mass **60** through the glass **110**. During daytime operation, the thermal control system **500** could have its louvers **530** fully closed or partially opened to provide the desired heat to the room **510**. At night time, the louvers **530** of the system **500** are opened to permit release of the stored thermal energy in wall **60** into the room **510**, as shown in FIG. **8**.

The lever **40** is illustrated in FIGS. **3** through **8** in various operative positions under three types of preferred control. In FIGS. **3** and **4**, a manual control is provided which the user operates based upon the user's personal comfort. In FIGS. **5** and **6**, a temperature sensor **580** is coupled to an electronic or mechanical control which operates the lever **40** through a mechanical

linkage **592**. In this embodiment, the user sets a thermostatic control **590** to a desired temperature, and the louvers are then activated accordingly. Finally, and as shown in FIGS. **7** and **8**, a timed control mechanical or electric circuit **700** is connected by a mechanical linkage **710** to the lever **40**. In this embodiment, the user of the present invention sets a clock to activate the opening and closing of the louvers at certain timed intervals.

To experimentally test the thermal control system **10** of the present invention, two identical test boxes **900** and **910** as shown in FIG. **9** were utilized. The boxes were oriented towards the South (arrow **902**). The inner dimensions of each test box were 0.91 m× 0.91 m×0.91 m (3′ by 3′ by 3′). In front of each test box **900** and **910** was placed a reflector **920**. Double glazed glass **930** was utilized in front of the storage wall **940**. In the "control" box **910**, horizontal louvers **950** were utilized in the fully opened position. For the "experimental" box **900**, horizontal louvers **960** were provided such that the louvers **960** could be variably opened and closed. At the end of the test box was an aluminum panel **970** followed by an insulation panel **980**. The panels **920** and **980** were hinged to the boxes **900** and **910**. During the day, the panels **920** and **980** were lowered to allow solar radiation into the boxes from the South and to permit heat loss from the North. At night time, the panels were closed. A layer of polyurethane insulation on the sides **990** covered the outside and bottom of the boxes. The thermal storage wall **940** was a 9.2 cm (3.625 in.) thick concrete brick wall and, as shown in FIG. **9**, the wall was arranged to test the mode of operation set forth in FIGS. **7** and **8** for the indirect/single zone. Each test box contained thermocouples at various locations in order to measure temperature.

FIG. **10** sets forth the graph of room air temperature of the experimental and control boxes **900** and **910** with the louvers opened as a function of time. The room air temperature behaviors of both boxes **900** and **910** are substantially identical through the temperature cycling. In FIG. **11**, the average storage wall temperature of the boxes, as a function of time, for the same test as that presented for FIG. **3**, are plotted. Again, the curves are nearly identical. In making the comparative cycling tests, between the two boxes **900** and **910**, the temperatures for the two boxes did not differ by more than two degrees centrigrade and on the average differed by less than one degree centigrade. Hence, the "experimental" box **900** and the "control" box **910** demonstrated similar temperature behaviors independent of the application of the thermal control system of the present invention (i.e., with the louvers fully opened). Therefore, the altered temperature behavior caused by regulation of the thermal control system **10** of the present invention can be closely evaluated and determined. In FIGS. **10** and **11**, points-in-time 1000 are indicative of when the front panel **920** and the back panel **980** were opened and points-in-time 1010 are indicative of when these panels were closed.

In FIGS. **12** and **13**, the effect of closing the louvers of the present invention during charging and the subsequent opening of the louvers during discharging for the "experimental" box **900** are illustrated. In FIG. **12**, the room air temperature as a function of time, for both boxes **900** and **910**, is plotted. At point-in-time 1200 (approximately 8:20 a.m.), the front **920** and back **980** panels were opened. At point-in-time 1210 (approximately 9:30 a.m.), the glass louvers **960** in the "experimental" box **900** were closed. As witnessed in FIG. **12**, the temperature of the room then increases. At point-in-time 1220 (approximately 5:30 p.m.) the front **920** and back **980** panels were closed. At point-in-time 1230 (approximately 7:00 a.m. the following morning), the glass louvers **960** were opened.

The results in FIG. **12** show that at peak temperatures, the room air temperature for the "experimental" box **900** was approximately 5 degrees lower than that of the control test box. Thus, closing of the louvers **960** lowered the heating of the room air temperature during charging by about five degrees, which represents the heat being retained in the storage wall. At point-in-time 1230 (7:00 a.m. the next morning), the glass louvers **960** were opened and the room air temperature increased due to a release of the stored thermal energy.

FIG. **13** sets forth the temperature plots for the average temperature of the storage wall **940** during these same points-in-time and shows that the additional thermal energy not released when the louvers **960** are closed is stored for future discharge.

FIG. **14** plots the effect of opening and closing the glass louvers **960** over a two day period. At point-in-time 1400 the front **920** and back **980** panels were opened (approximately 8:15 a.m. on the first day). The glass louvers **960** were closed in the experimental box **900** at point-in-time 1410 (approximately 9:15, the first day). The front and back panels were closed at point-in-time 1420 (approximately 4:45 p.m. the first day) and remained closed until point-in-time 1440 (approximately 7:00 a.m. the second day). The louvers **960** were opened between points-in-time 1430 and 1450 (between approximately 7:00 a.m. and 10:30 a.m., the second day) and then were kept closed for the remainder of the day and night. The front panel **920** and back panel **980** were opened at point-in-time 1455 (approximately 8:00 a.m., the second day) and closed at point-in-time 1460 (approximately 4:20 p.m., the second day).

As mentioned above, FIG. **14** sets forth the plot of the room air temperature as a function of time and demonstrates the observed affect of opening and closing louvers **960** based on a predetermined time sequence. In FIG. **14**, the use of the thermal control system of the present invention reduced the magnitude of room air temperature fluctuations, in some cases as much as 44%.

It is to be expressly understood that although the glass louvers **960** were utilized, the louvers **960** can be made of material other than glass. This is especially true when, as in the test boxes, the intended mode of operation in an indirect gain/single zone application as set forth in FIGS. **7** and **8**. In this mode of operation, the requirement of transparency for solar radiation is not necessary. Hence, when thin polished aluminum is utilized as the material for the louvers, tests indicate that more energy is stored during charging by as much as 12% since aluminum louvers can provide more than twice the thermal impedance of glass louvers. Finally, the use of glass louvers during the charging of the storage wall allows more energy to be stored in the storage wall for future use, and as set forth in FIG. **13**, this amounts to about 5% of the incident energy.

It is to be appreciated that the use of the thermal control system of the present invention on thermal storage walls in passive solar buildings provides a temporal and a graduated control over the rate of thermal energy released by radiation and by free convection from the thermal storage wall. In addition, increased storage of energy per unit of incident solar energy in the wall and interzonal transfer of energy through the wall occurs.

It will be understood that the invention may be embodied in other specific forms without departing from the spirit or central characteristics thereof. The present examples and embodiments, therefore, are to be considered in all respects as illustrative and not restrictive, and the invention is not to be limited to the details given herein but may be modified within the scope of the appended claims.

What I claim is:

1. A thermal control system for a thermal storage wall wherein said thermal wall is capable of storing thermal energy from insolation of solar radiation, said system comprising a single regulating means spaced a predetermined distance from said thermal wall for controlling a charging of said wall and for regulating the release of thermal energy from said wall, said regulating means being selectively adjustably operable in a range from a fully opened to a fully closed position, said regulating means being substantially transparent to said incoming solar radiation such that when said regulating means is in any position said wall receives substantially all of said solar radiation, and wherein said regulating means is substantially opaque to said thermal energy.

2. A thermal control system as described in claim **1**, wherein said regulating means increases the amount of thermal heat stored in said thermal wall when fully closed.

3. A thermal control system as described in claim **2**, wherein said system further comprises means operatively interconnected with said regulating means for automatically controlling said regulating means over preset intervals of time.

4. A thermal control system as described in claim **1**, wherein said regulating means comprises a plurality of louvers made from a material substantially transparent to said solar radiation and substantially opaque to said thermal energy, and wherein said system further comprises means for selectively opening and closing said louvers in order to regulate the release of thermal energy from said thermal wall.

5. A thermal control system as described in claim **1**, wherein said regulating means is adapted for operation in an open position to enable said thermal energy to be released from said wall be free convection and by thermal radiation, and wherein said regulating means is further adapted for operation in a closed position to substantially minimize said release of thermal energy by said free convection and by said thermal radiation.

6. A thermal control system as described in claim **1**, wherein said regulating means is adapted for operation between a fully closed position and a fully open position to provide regulation of said thermal energy between maximum and minimum ranges of said thermal energy released.

7. A thermal control system as described in claim **1**, wherein said system is adaptable for regulating said release of stored thermal energy into a desired external zone, and wherein said means for selectively adjusting said regulating means enables said regulating means to be selectively opened and closed in direct response to variations in temperatures defined by said external zone.

8. A thermal control system as described in claim **7**, wherein said means for selectively adjusting said regulating means is adapted to regulate said opening and closing of said regulating means by either timed operation, manual operation, or thermostatic operation.

9. A thermal control system for a thermal storage wall disposed in a room wherein said thermal storage wall is capable of storing thermal energy from insolation of solar radiation, said system comprising:

means spaced a predetermined distance from said thermal wall for regulating the release of thermal energy from said thermal wall into said room, said regulating means being operable between a closed position and an open position, said regulating means being substantially transparent to said incoming solar radiation such that said wall receives substantially all said incoming solar radiation impacting on said regulating means when said regulating means is in any position, and said regulating means being substantially opaque to thermal energy, said regulating means being adapted to release said thermal energy in an open position; and

means operatively connected to said regulating means for controlling said regulating means.

10. A thermal control system as described in claim **9**, wherein said regulating means comprises a plurality of louvers substantially covering the side of said storage wall disposed to said solar radiation, each of said louvers being made from a material substantially transparent to said solar radiation so that when said louvers are in any said operative position, said thermal storage wall receives substantially all of said impacting solar radiation, said material further being substantially opaque to said thermal energy so that when said louvers are substantially said closed, said thermal release from said storage wall through free convection air current and through thermal radiation from said storage wall is substantially minimized, and wherein said controlling means comprises a device operatively connected to said louvers for selectively opening and closing said louvers in order to regulate the release of thermal energy from said wall and for directing the release of said thermal energy from said wall in predetermined directional patterns, said controlling means further including actuating means operatively connected to said opening and closing means for controlling the opening and closing of said louvers.

11. The thermal control system as described in claim **10**, wherein said actuating means comprises means manually preset to selectively open and close said louvers according to a predetermined pattern of time intervals.

12. The thermal control system as described in claim **10**, wherein said actuating means comprises means for controlling the opening and closing of said louvers based upon variations in said room temperature.

13. The thermal control system as described in claim **12**, wherein said actuating means comprises a temperature sensor located in said room, and means receptive of temperature readings from said sensor for selectively opening and closing said louvers in order to maintain the temperature at a present value.

14. A thermal control system for a thermal storage wall located between a first room and a second room wherein said thermal wall is capable of storing thermal energy from insolation of solar radiation in said first room, said system comprising:

first means in said first room spaced a predetermined distance from said thermal wall for regulating the release of thermal energy from said thermal wall into said first room, said first regulating means being operable in a range from a fully opened to a fully closed position, said first regulating means being substantially transparent to said incoming solar radiation such that when said regulating means is in any position said wall receives substan-

tially all said incoming solar radiation, and said regulating means being substantially opaque to said thermal energy; and

second means in said second room spaced a predetermined distance from said thermal wall for regulating the release of thermal energy from said thermal wall into said second room, said second regulating means being substantially opaque to said thermal energy.

* * * * *