US005798632A

United States Patent [19]

Muljadi

[11] Patent Number: 5,798,632

[45] Date of Patent: Aug. 25, 1998

[54] **VARIABLE SPEED WIND TURBINE GENERATOR WITH ZERO-SEQUENCE FILTER**

[75] Inventor: **Eduard Muljadi**, Golden, Colo.

[73] Assignee: **Midwest Research Institute**, Kansas City, Mo.

[21] Appl. No.: **870,858**

[22] Filed: **Jun. 6, 1997**

Related U.S. Application Data

[63] Continuation of Ser. No. 503,818, Jul. 18, 1995, abandoned.

[51] **Int. Cl.**[6] **H02P 9/00**

[52] **U.S. Cl.** **322/29**; 322/20; 290/44; 290/55

[58] **Field of Search** 322/29, 20, 28; 290/44, 55

[56] **References Cited**

U.S. PATENT DOCUMENTS

4,087,698	5/1978	Myers	307/84
4,189,648	2/1980	Harner	290/44
4,218,732	8/1980	Lafuze	363/160
4,228,361	10/1980	Jacobs et al.	290/44
4,357,542	11/1982	Kirschbaum	290/44
4,695,736	9/1987	Doman et al.	290/44
4,794,316	12/1988	Uchino et al.	322/47
4,906,060	3/1990	Claude	322/29
4,992,920	2/1991	Davis	363/36
5,083,039	1/1992	Richardson et al.	290/44
5,155,375	10/1992	Holley	290/44
5,187,427	2/1993	Erdman	323/207
5,225,712	7/1993	Erdman	290/44
5,289,041	2/1994	Holley	290/44
5,652,485	7/1997	Spiegel et al.	318/147

Primary Examiner—Steven L. Stephan
Assistant Examiner—Nicholas Ponomarenko
Attorney, Agent, or Firm—Ken Richardson

[57] **ABSTRACT**

A variable speed wind turbine generator system to convert mechanical power into electrical power or energy and to recover the electrical power or energy in the form of three phase alternating current and return the power or energy to a utility or other load with single phase sinusoidal waveform at sixty (60) hertz and unity power factor includes an excitation controller for generating three phase commanded current, a generator, and a zero sequence filter. Each commanded current signal includes two components: a positive sequence variable frequency current signal to provide the balanced three phase excitation currents required in the stator windings of the generator to generate the rotating magnetic field needed to recover an optimum level of real power from the generator; and a zero frequency sixty (60) hertz current signal to allow the real power generated by the generator to be supplied to the utility. The positive sequence current signals are balanced three phase signals and are prevented from entering the utility by the zero sequence filter. The zero sequence current signals have zero phase displacement from each other and are prevented from entering the generator by the star connected stator windings. The zero sequence filter allows the zero sequence current signals to pass through to deliver power to the utility.

32 Claims, 14 Drawing Sheets

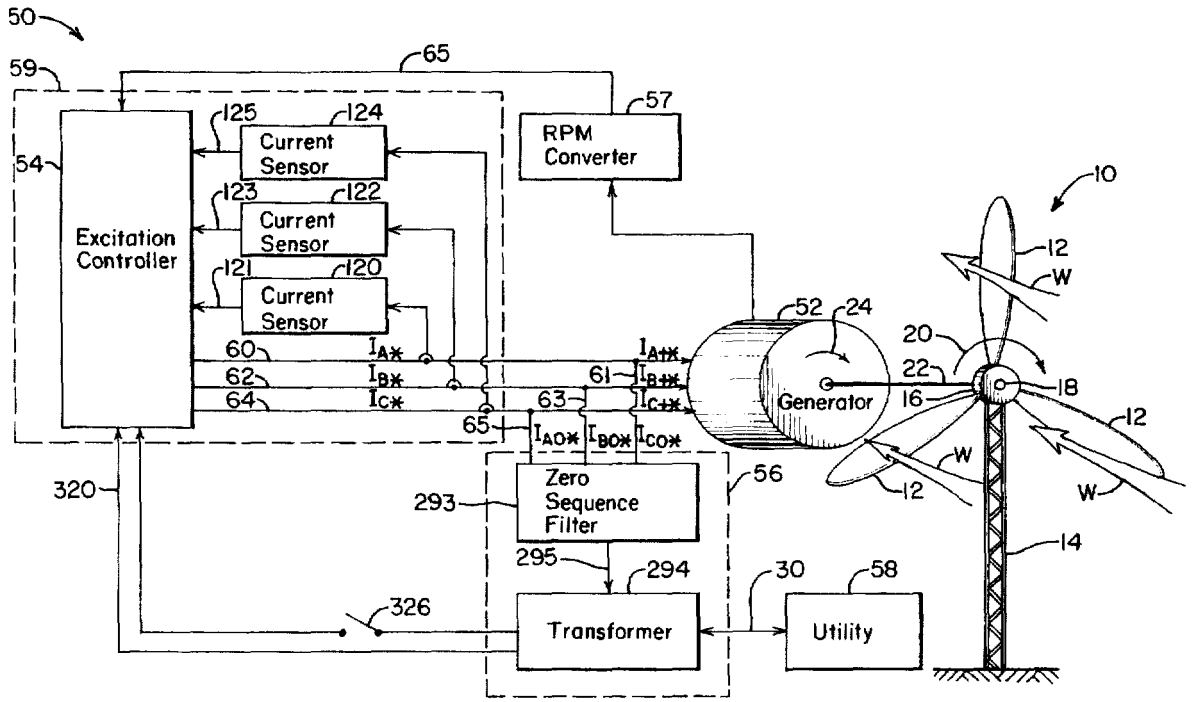

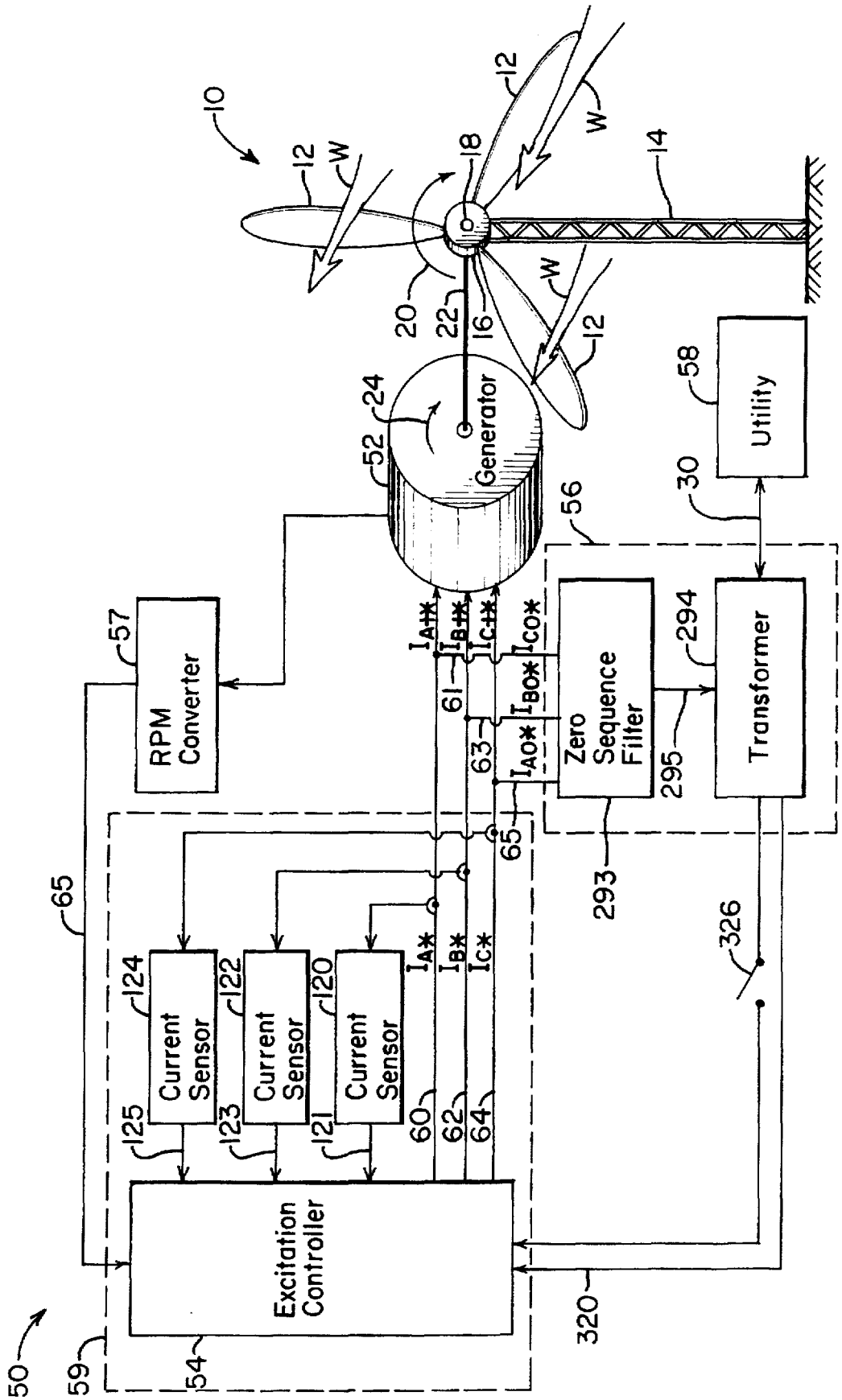
Generator
Utility
RPM Converter
Zero Sequence Filter
Transformer
Current Sensor
Current Sensor
Current Sensor
Excitation Controller

FIG. 1

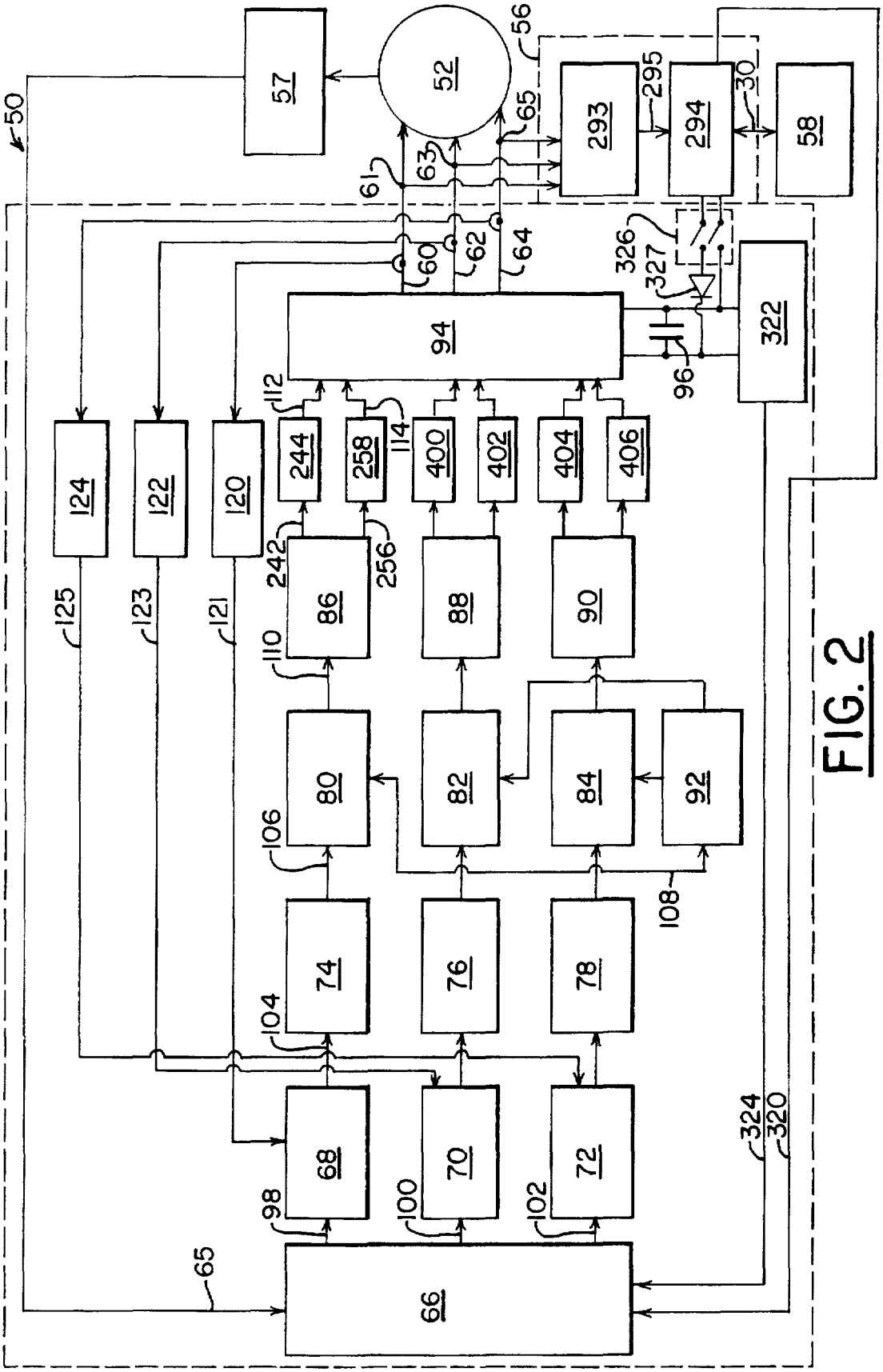
50
57
52
56
65
293
295
294
30
58
61
63
60
62
64
326
327
322
94
96
112
114
244
258
400
402
404
406
124
122
120
242
256
86
88
90
125
123
121
110
80
82
84
92
106
108
74
76
78
104
68
70
72
98
100
102
324
320
66
65

FIG. 2

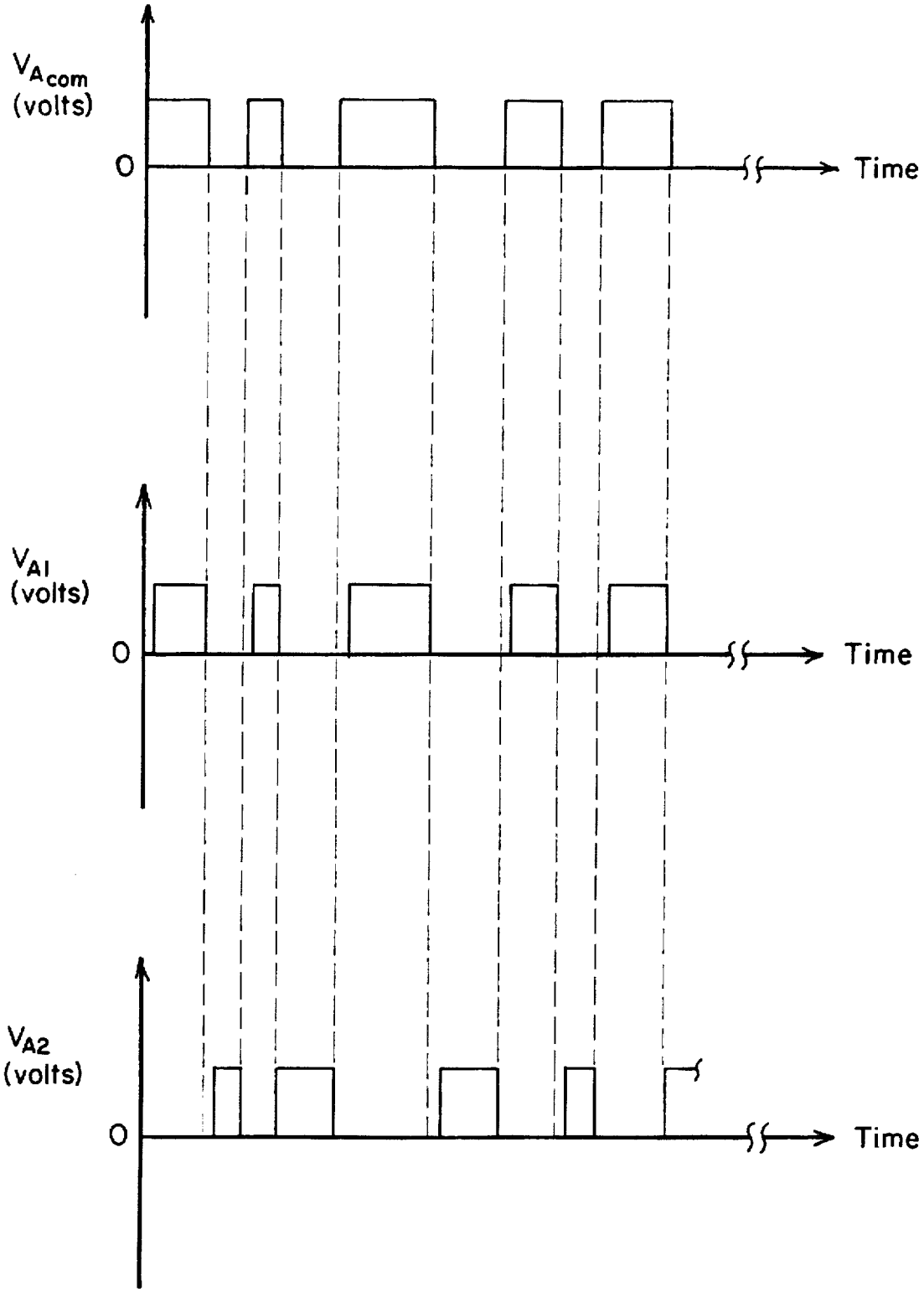

FIG. 3

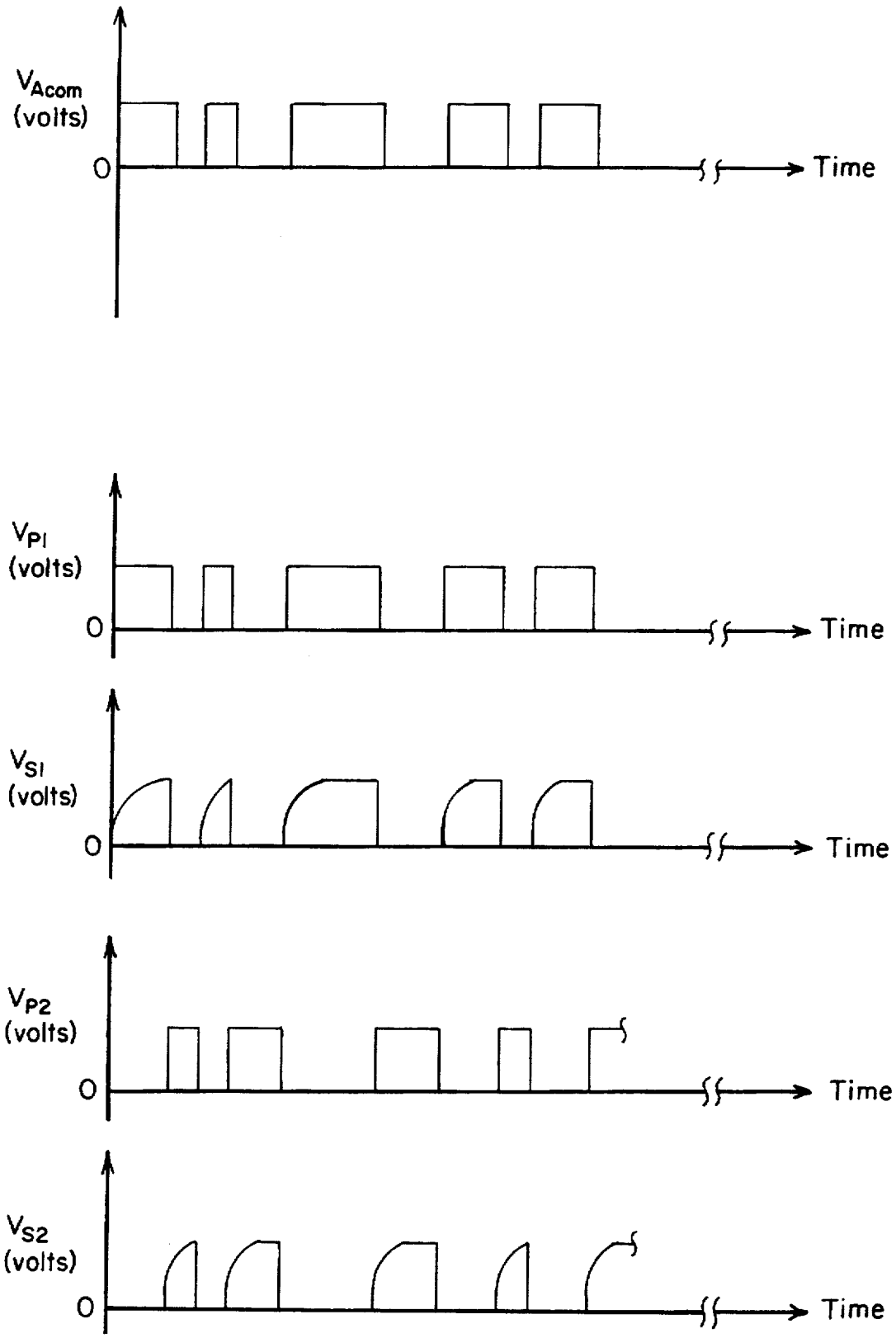
V_{Acom}
(volts)
0
Time
V_{P1}
(volts)
0
Time
V_{S1}
(volts)
0
Time
V_{P2}
(volts)
0
Time
V_{S2}
(volts)
0
Time

FIG. 4

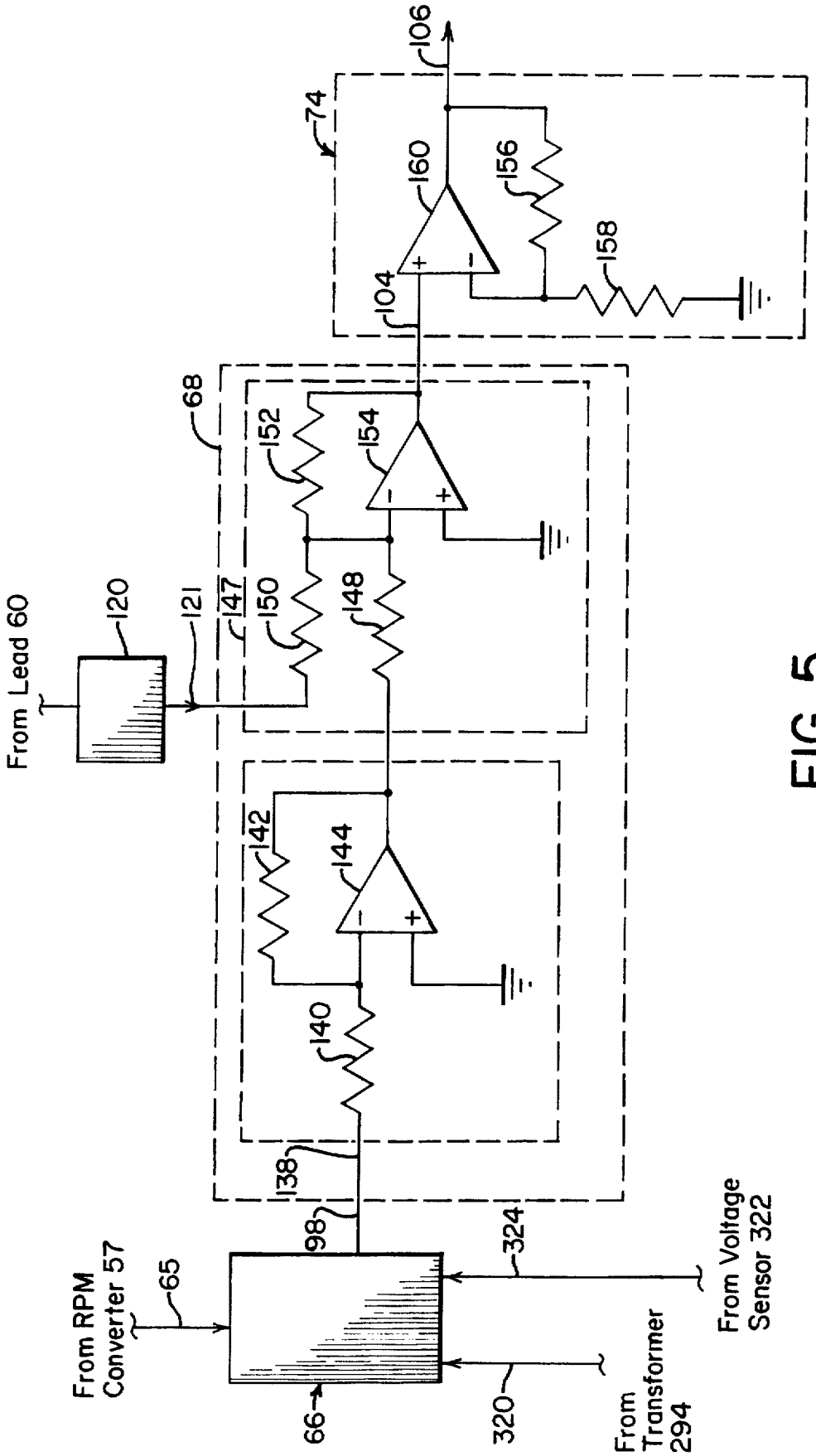
From Lead 60
120
121
147
150
152
154
148
68
142
144
140
138
98
From RPM Converter 57
65
66
324
320
From Transformer 294
From Voltage Sensor 322
74
160
156
158
104
106

FIG. 5

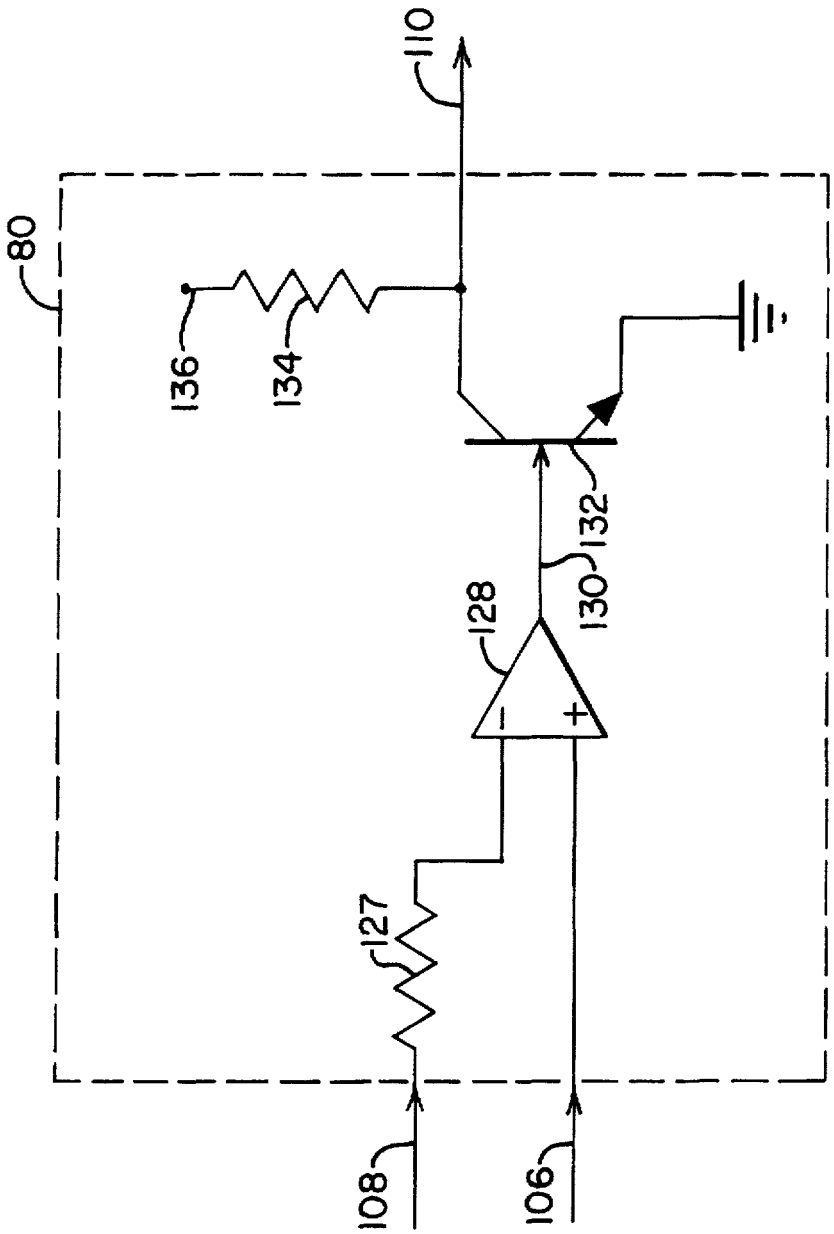

FIG. 6

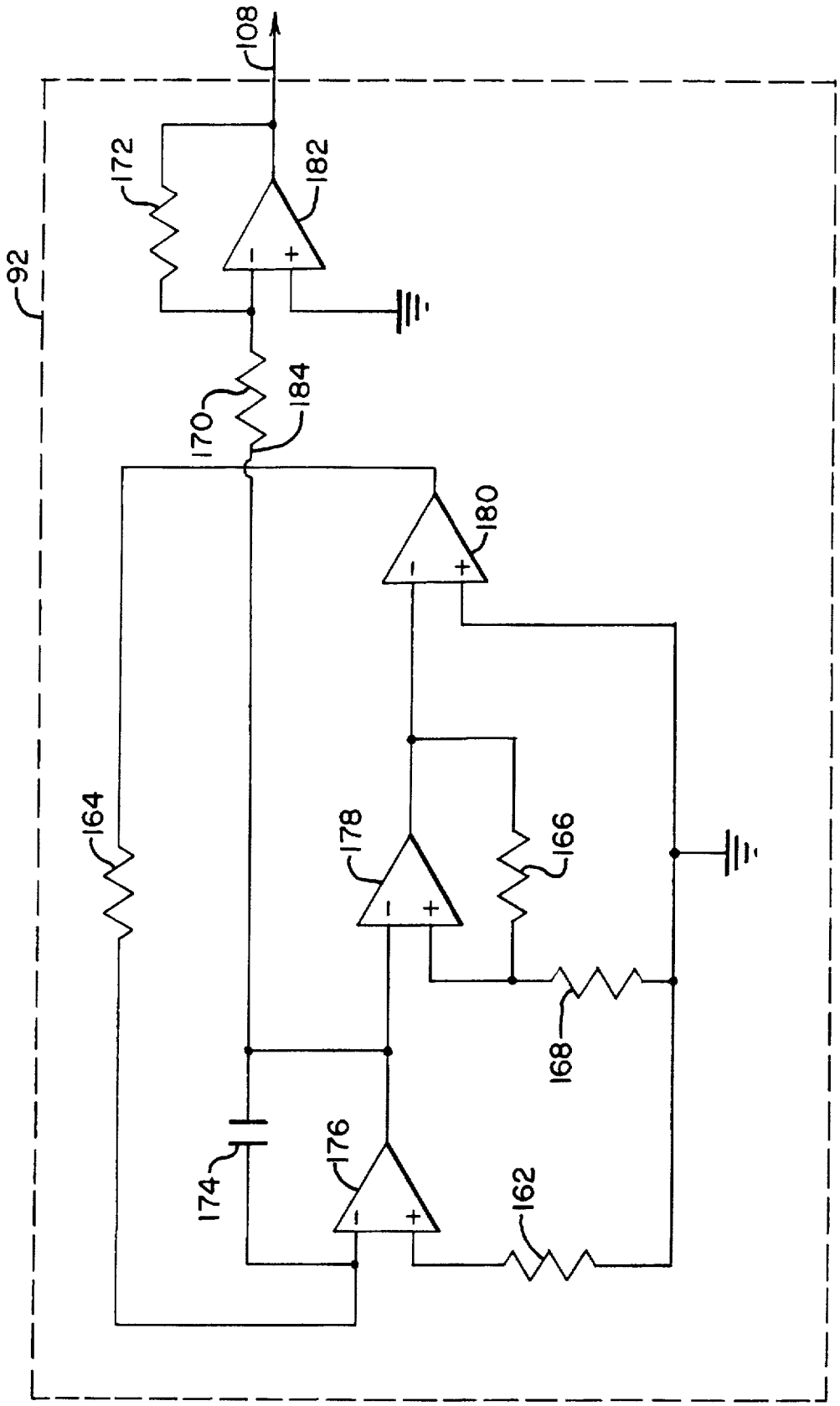

FIG. 7

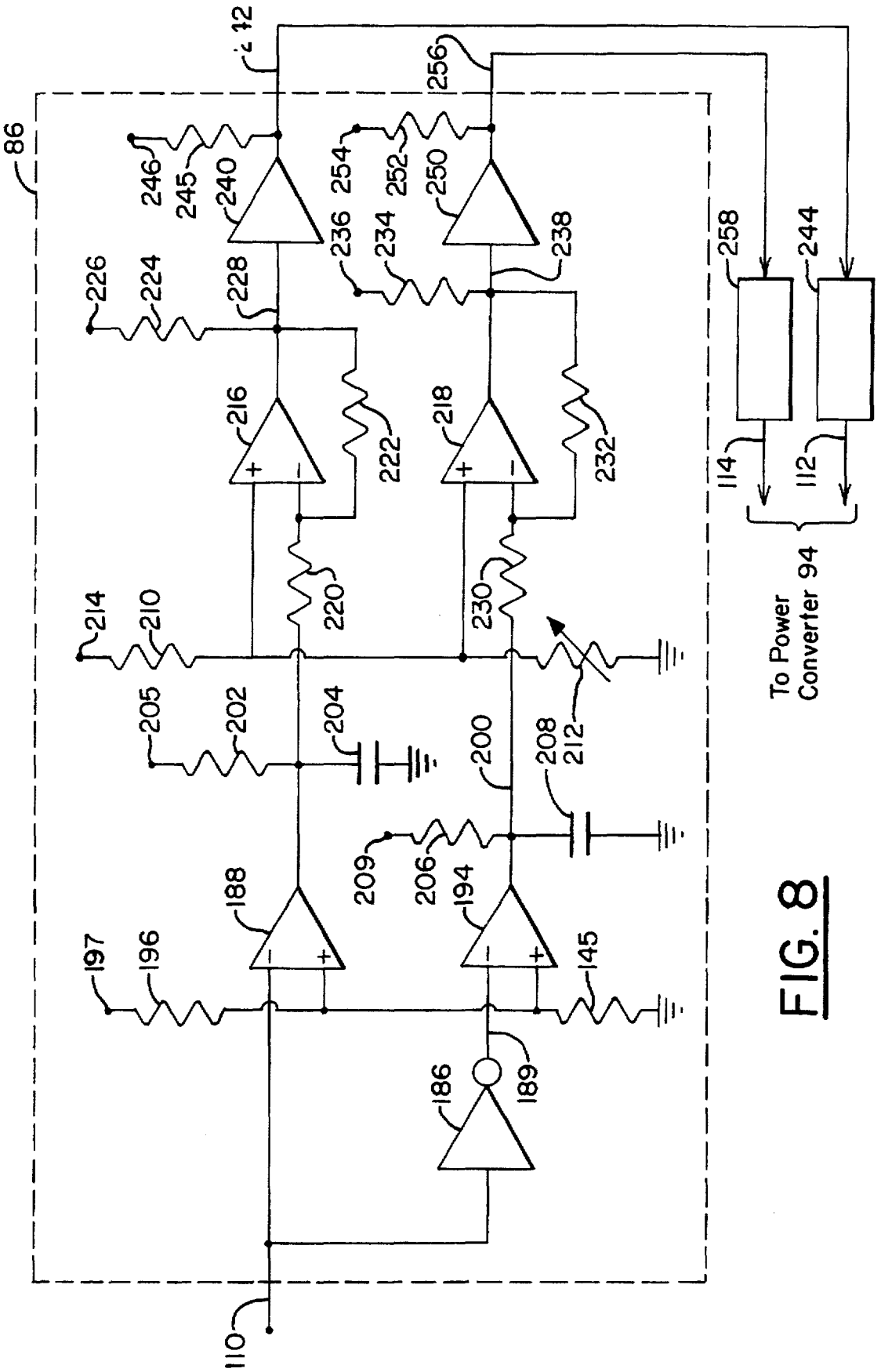
86
112
256
246
245
240
254
252
250
236
234
238
258
244
226
224
228
216
222
218
232
114
112
To Power Converter 94
214
210
220
230
205
202
204
200
208
212
209
206
194
188
197
196
145
186
189
110

FIG. 8

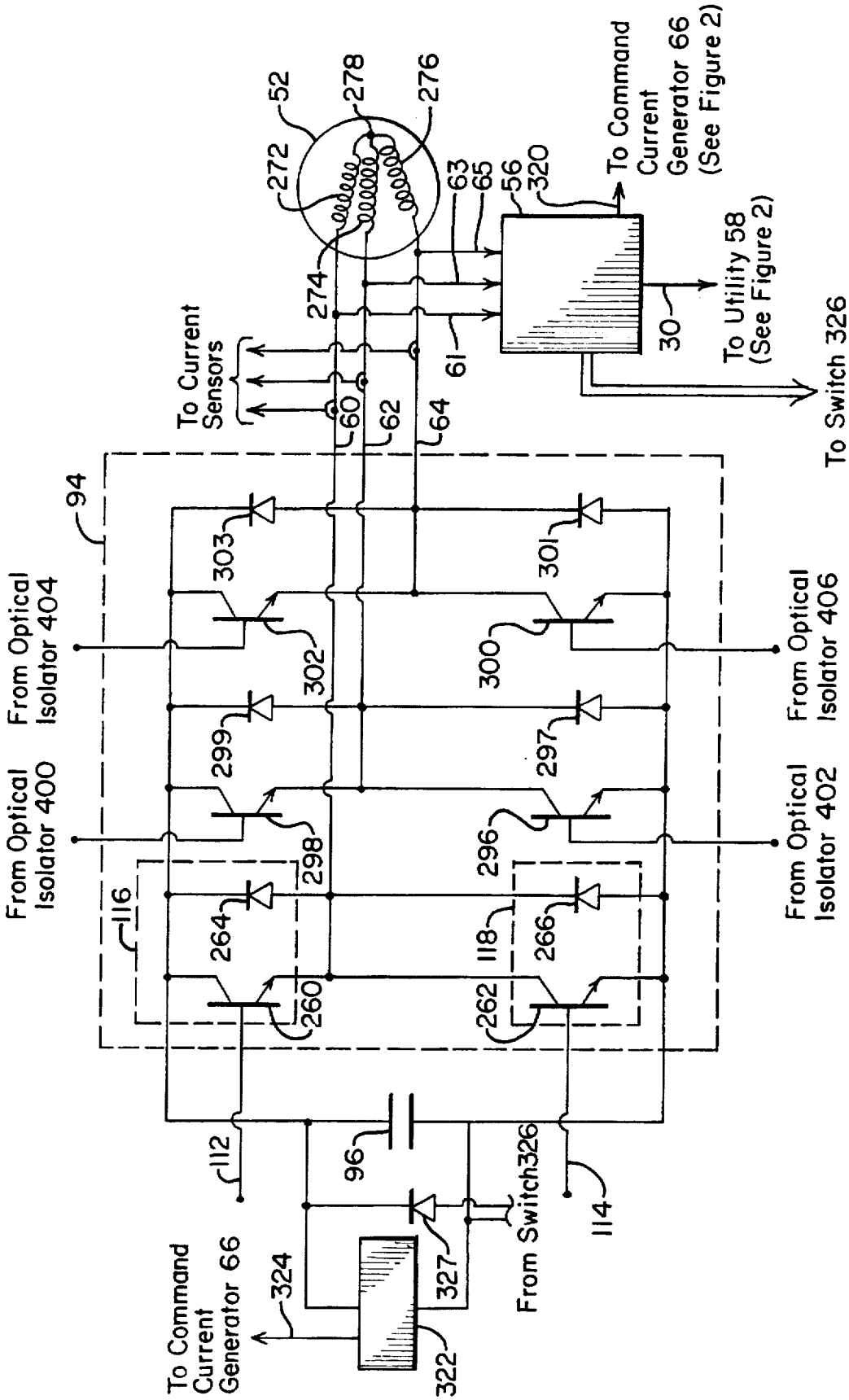
To Command Current Generator 66 (See Figure 2)
To Utility 58 (See Figure 2)
To Switch 326 (See Figure 2)
To Current Sensors
From Optical Isolator 404
From Optical Isolator 400
From Optical Isolator 406
From Optical Isolator 402
To Command Current Generator 66
From Switch326
52
272
278
276
274
63
65
56
320
30
61
60
62
64
94
303
301
302
300
299
297
298
296
264
266
260
262
116
118
112
96
114
324
327
322

FIG. 9

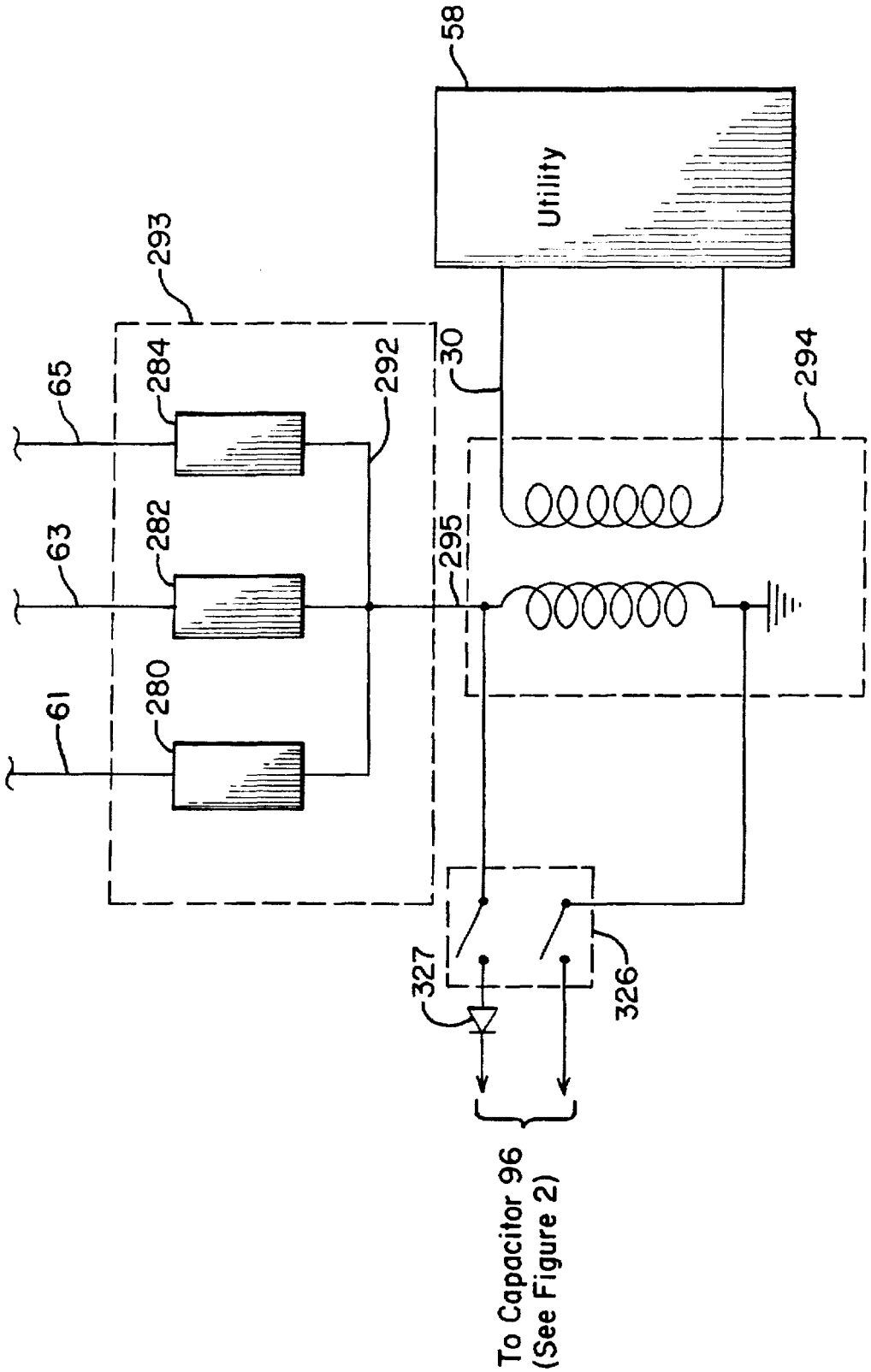
58
Utility
293
65
284
292
30
294
63
282
295
61
280
327
326
To Capacitor 96
(See Figure 2)

FIG. 10

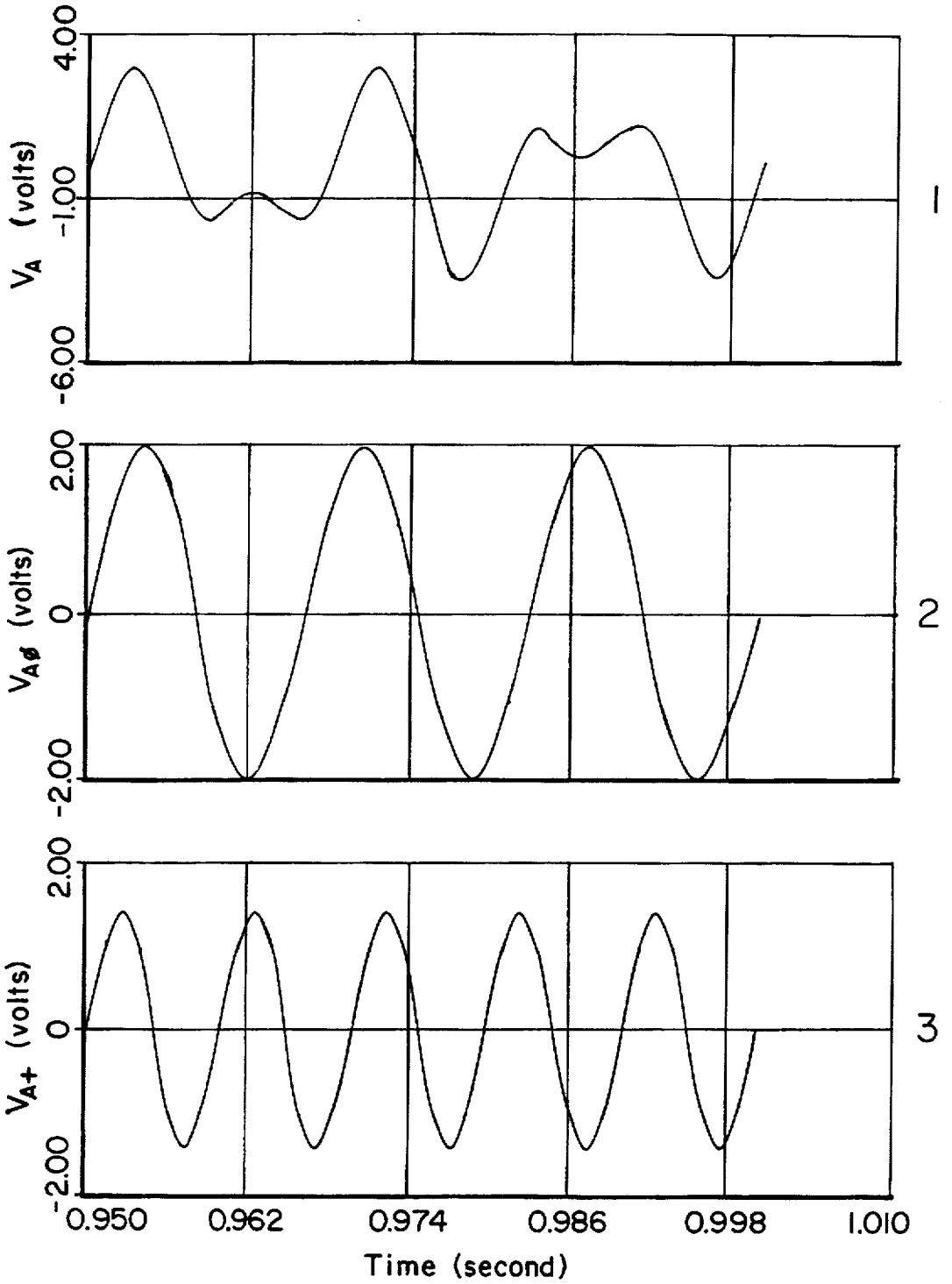
4.00
-1.00
-6.00
V_A (volts)
1
2.00
0
-2.00
$V_{A\phi}$ (volts)
2
2.00
0
-2.00
V_{A+} (volts)
3
0.950
0.962
0.974
0.986
0.998
1.010
Time (second)

FIG. 11

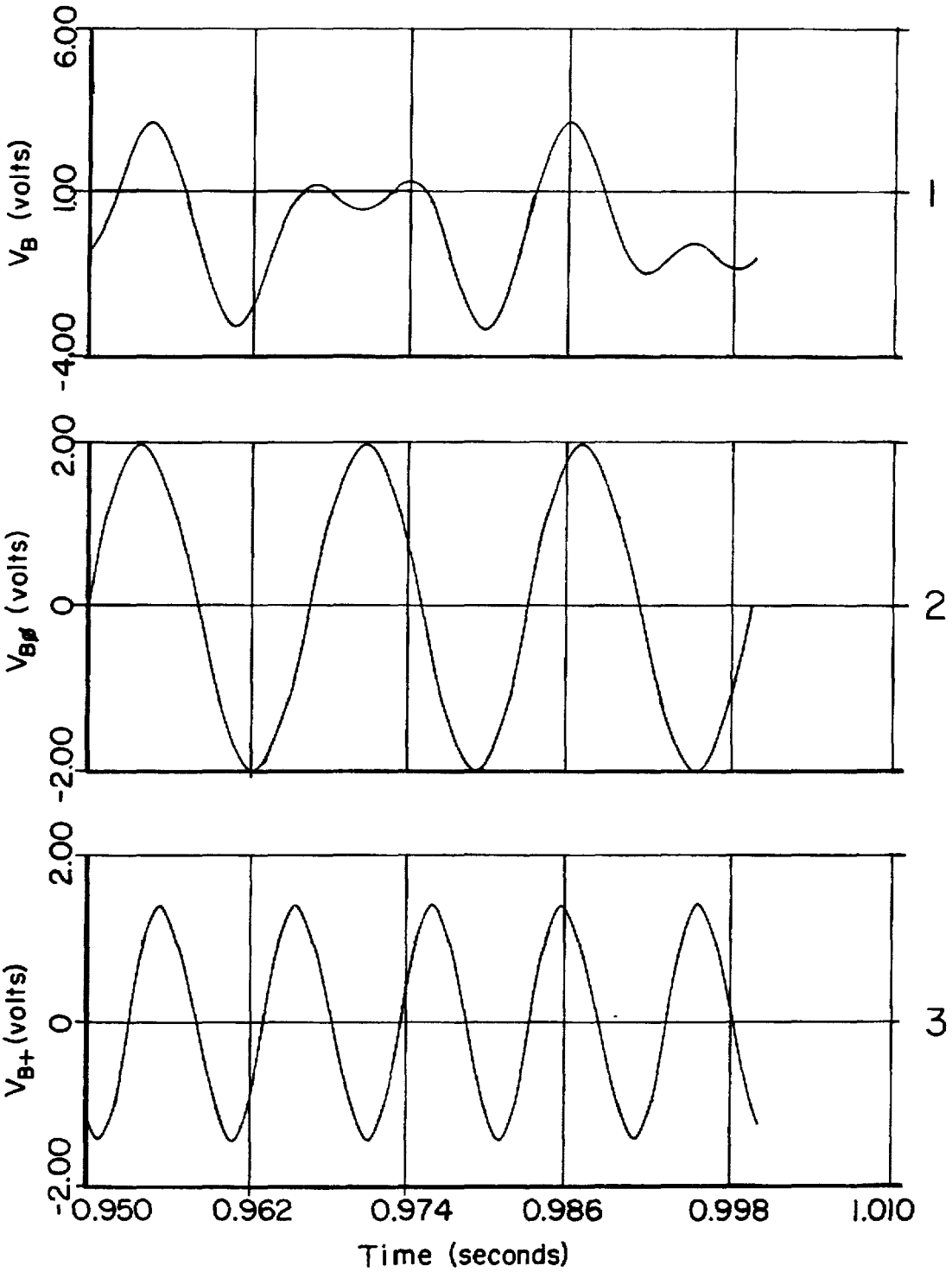
6.00
1.00
-4.00
V_B (volts)
1
2.00
0
-2.00
$V_{B\phi}$ (volts)
2
2.00
0
-2.00
V_{B+} (volts)
3
0.950
0.962
0.974
0.986
0.998
1.010
Time (seconds)

FIG. 12

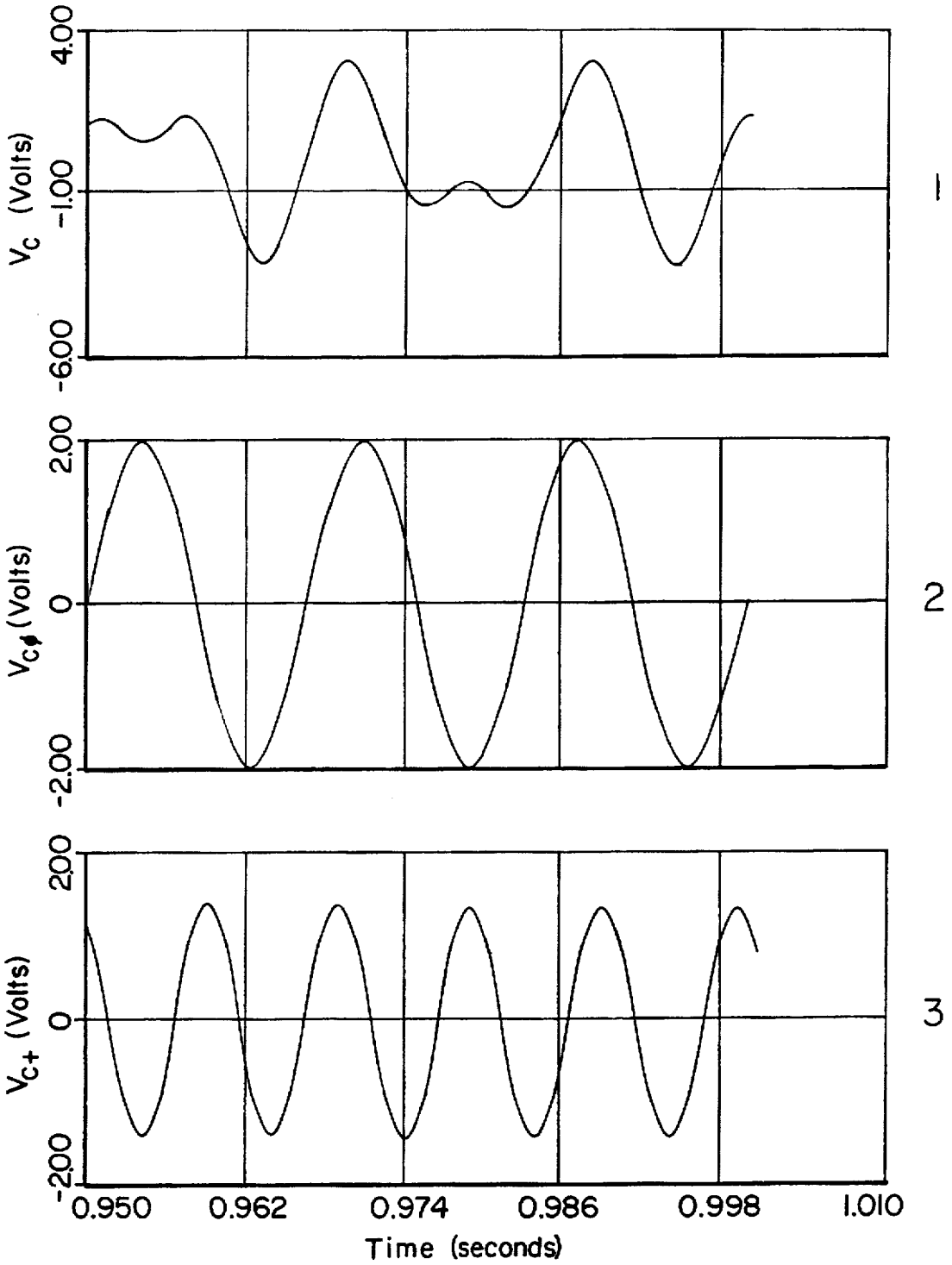
4.00
-1.00
-6.00
V_C (Volts)
1
2.00
0
-2.00
$V_{C\phi}$ (Volts)
2
2.00
0
-2.00
V_{C+} (Volts)
3
0.950
0.962
0.974
0.986
0.998
1.010
Time (seconds)

FIG. 13

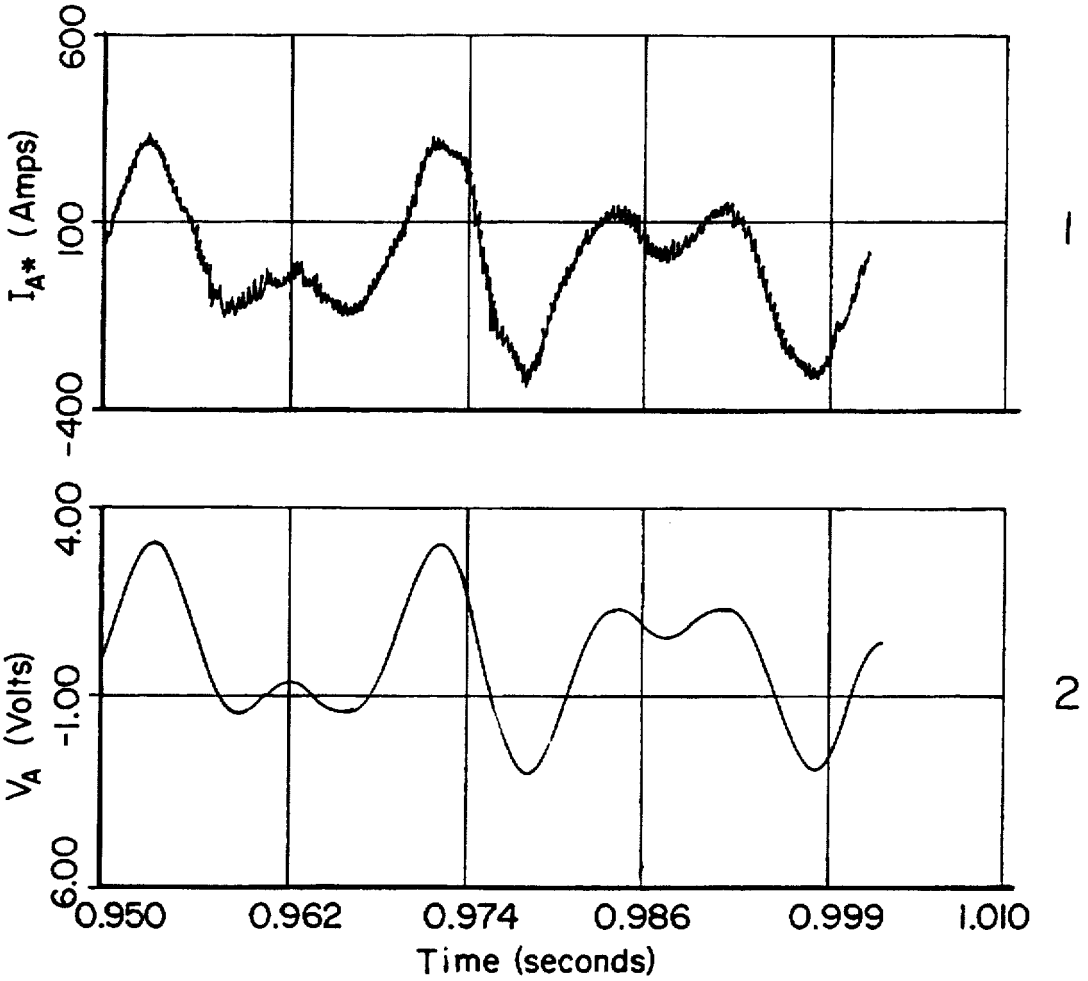
600
100
-400
I_{A^*} (Amps)
1
4.00
-1.00
6.00
V_A (Volts)
2
0.950
0.962
0.974
0.986
0.999
1.010
Time (seconds)

FIG. 14

VARIABLE SPEED WIND TURBINE GENERATOR WITH ZERO-SEQUENCE FILTER

This application is a continuation of application Ser. No. 08/503,818, filed Jul. 18, 1995, now abandoned.

The United States Government has rights in this invention under Contract No. DE-AC 36-83CH10093 between the U.S. Department of Energy and the National Renewable Energy Laboratory, a Division of Midwest Research Institute.

BACKGROUND OF THE INVENTION

1. Field of the Invention

This invention relates generally to a generator system for converting wind power into electrical power to be delivered to a public utility and, more particularly, to a variable speed wind turbine generator system in which electrical power in the form of three phase alternating current is converted and delivered to a utility with a single phase, sinusoidal waveform at sixty (60) hertz and unity power factor.

2. Description of the Prior Art

Wind power has been used for ages to pump water, grind grain, and more recently to generate electricity. Such historic uses of wind power, however, have been primarily in applications where a single wind machine operated alone for the benefit of one or a small number of users. There is now more interest in developing wind power generator systems in which electricity produced by a single wind power generator can be supplied to utility power grids. However, when the electrical power generated by a wind power system is to be supplied to a utility grid, then the supplied power is required to have a constant frequency, e.g., sixty (60) hertz, that is synchronized to and in phase with the frequency of the utility lines. The entire electrical infrastructure of the United States and most industrial, commercial, and even home electrical equipment is designed on the sixty (60) cycles-per-second (hertz) frequency standard, so any electric power supplied by utility company power grids in the United States has to conform to that standard. Other countries or regions have different frequency standards, for example, fifty (50) hertz in many European countries. The different frequency standards of different countries are not significant to this invention, but the difficulties of generating and supplying electric power efficiently from wind to a specific frequency standard without implementing mechanisms and techniques that compromise power generation efficiency in order to deliver at a specific frequency has been an ongoing problem.

Conversion of wind power into electrical power is accomplished in most wind power systems by connecting a wind-driven turbine to the shaft of an electric generator, usually an alternating current AC induction generator. Obtaining the required sixty (60) hertz or other standard frequency has in the past been accomplished by limiting the generator to a constant rotational speed, which, unless a variable speed transmission is used in the generator, requires that the wind turbine also rotate at a constant speed, regardless of the wind velocity. Requiring the constant speed operation of a wind turbine in variable wind velocity conditions, however, limits its energy conversion efficiency, thus also limiting the electric power generated by the system for delivery to the utility. The rotational speed of the rotating wind turbine needs to be variable and proportional to the wind velocity in order to obtain maximum power output from the generator.

Variable speed wind turbine generators in which the turbine rotational speed can vary according to varying

ambient wind velocity conditions are, of course, an obvious solution, provided they can be made to produce constant sixty (60) hertz or other standard frequency AC electricity. The output power from a variable speed wind turbine generator depends largely on the velocity of the wind, the revolutions-per-minute (RPM) of the rotating turbine and the rotating rotor in the generator, and the frequency of the current signals flowing in the stator windings of the generator. Since the wind turbine shaft rotates the electric generator shaft and the rotor and the revolutions-per-minute (RPM) of the rotating wind turbine is directly proportional to the ambient wind velocity, for a specific ambient wind velocity, there is a specific RPM of the rotating turbine and the rotating rotor. For a specific RPM of the rotating turbine and the rotating rotor, there is a specific frequency in hertz of the electric currents flowing in the stator windings of the generator that maximizes the generated power. Therefore, while a variable speed wind turbine system operating in varying wind velocity conditions can generate more electric power than a constant speed turbine generator, it requires a more complicated electrical system, since the generated electricity will have a variable frequency that needs to be converted to sixty (60) hertz before the electric power is delivered to a utility. Some prior art variable speed wind turbine generator systems use power switches to covert the frequency of the generated power to sixty (60) hertz or other standard frequency. For example, U.S. Pat. No. 5,083,039 issued to Richardson et al. discloses such a system that uses twelve switches. It is desirable, however, to reduce the number of power switches and the supporting electronic circuitry so as to reduce the complexity and cost of the generator system, to reduce the physical size of the wind generator system, and to increase the reliability and useful life of the generator system. In addition, it is desirable to have a generator system that adjusts the frequency of the currents supplied to the stator windings of the generator so as to optimize the power generated. Finally, the generator system should supply the generated power to the utility at unity power factor and with a sixty (60) hertz or other standard frequency in a sinusoidal waveform that is synchronized with the phase of the signals in the utility so as to maximize the power delivered to the utility by the generator. Unity power factor for purposes of this invention is defined as a power factor of one (1), which is obtained when the current and the voltage signals in a circuit are completely in phase.

SUMMARY OF THE INVENTION

Accordingly, it is a general object of this invention to provide a variable speed turbine generator system that generates an optimum level of power during varying wind velocity conditions and delivers the generated power to a utility at unity power factor and with a sixty (60) hertz or other standard frequency in a sinusoidal waveform that is synchronized with the phase of the signals in the utility.

It is another general object of this invention to provide a variable speed wind turbine generator system that minimizes the number of power switches and the complexity of the supporting electronic circuitry required to create the necessary current signals to excite the stator windings in the generator and the necessary current signals to deliver the generated power to the utility.

Additional objects, advantages, and novel features of the invention shall be set forth in part in the description that follows, and in part will become apparent to those skilled in the art upon examination of the following or may be learned by the practice of the invention. The objects and the advantages may be realized and attained by means of the instru-

mentalities and in combinations particularly pointed out in the appended claims.

To achieve the foregoing and other objects and in accordance with the purposes of the present invention, as embodied and broadly described therein, the apparatus of the present invention includes a variable speed wind turbine generator having its stator windings connected in a star configuration, an excitation controller that generates three current signals, each current signal having two current components, the first current component being the current signal necessary to supply three-phase balanced current signals to the stator windings in the generator and the second current component being the current signal necessary to deliver the real electric power generated by the generator to a utility at single-phase, unity power factor, and at sixty (60) hertz, and a zero sequence filter or bandpass filter to allow the second current component to be delivered to the utility while preventing the first current component from being delivered to the utility. The first current component signals supplied by the excitation controller and supplied to the stator windings in the generator have a frequency that is continuously adjusted by the excitation controller so that an optimum amount of power is continuously generated by the generator during varying wind velocity conditions. The second signal components supplied by the excitation controller and delivered to the zero sequence filter or bandpass filter are in phase with the signals in the utility and have a magnitude that is continuously adjusted by the excitation controller so that all of the real power generated by the generator is delivered to the utility.

The excitation controller includes an energy storage device that is charged when the power generator system is activated. The excitation controller further includes power switches, which can be comprised of transistors and diodes, that are individually and selectively activated and deactivated by pulsed voltage signals to create the desired current signals. The frequency of the activation and the deactivation of the power switches can be optionally controlled to increase the useful life of the power switches. The current signals produced by the power switches continuously depletes the energy stored in the energy storage device. However, the generated power continuously recharges the energy in the energy storage system so that the average energy in the energy storage remains constant. A feedback loop is used to ensure that the first current component signals are three-phase, balanced, and have the frequency required to maximize the generated power for the particular wind velocity. Feedback loops are also used to ensure that the second current component signals have the magnitude necessary to deliver all of the generated power to the utility, to ensure that there is no excess build up of energy in the energy storage device, and to ensure that the frequency of the second current component signals are all in phase with the signals in the utility

The excitation controller also includes a voltage signal generator that creates specific voltage reference signals based on the wind velocity, the phase of the signals in the utility, and the amount of generated power that is delivered to the utility. The voltage reference signals created by the voltage signal generator are compared to second voltage signals that are representative of the current signals being produced by the excitation controller. The resultant voltage signal is used as a template to create the pulsed voltage signals that control the activation and the deactivation of the power switches.

BRIEF DESCRIPTION OF THE DRAWINGS

The accompanying drawings, which are incorporated in and form a part of the specifications, illustrate the preferred embodiments of the present invention, and together with the descriptions serve to explain the principles of the invention.

In the Drawings:

FIG. **1** shows a functional block diagram of the operative components and electronic circuitry of the generator system according to the present invention;

FIG. **2** shows a more detailed functional block diagram of the operative components and electronic circuitry of the generator system according to the present invention shown in FIG. **1**;

FIG. **3** shows a comparison of the input voltage signal to and the output voltage signals from the lock out circuit portion of the generator system according to the present invention shown in FIG. **1**;

FIG. **4** shows a comparison of the input voltage signal to the lock out circuit and some of the voltage signals created in the lock out circuit of the generator system according to the present invention shown in FIG. **1**;

FIG. **5** shows a schematic diagram of the error detector and the amplifier portions of the electronic circuitry of the generator system of FIG. **1** constructed to create a signal representing the difference between the signals generated by the command current generator and the signals generated by the power converter;

FIG. **6** shows a schematic diagram of the comparator portion of the electronic circuitry of the generator system of FIG. **1** constructed to compare the output of the amplifier with the output of the triangle wave generator;

FIG. **7** shows a schematic diagram of the triangle wave generator portion of the electronic circuitry of the generator system of FIG. **1** constructed to provide a triangle waveform voltage signal to the comparator;

FIG. **8** shows a schematic diagram of the lock out circuit portion of the electronic circuitry of the generator system of FIG. **1** constructed to provide two pulse voltage signals to the power converter;

FIG. **9** shows a schematic diagram of the power converter portion of the electronic circuitry of the generator system of FIG. **1** constructed to use the voltage signals provided by the lock out circuit to create the desired output current signals;

FIG. **10** shows a schematic diagram of the zero sequence filter and transformer portions of the electronic circuitry of the generator system of FIG. **1** constructed to provide single phase electric power to the utility at sixty (60) hertz or other standard frequency and at unity power factor;

FIG. **11** shows an example voltage signal generated by the command current generator of the generator system of FIG. **1**;

FIG. **12** shows another example voltage signal generated by the command current generator of the generator system of FIG. **1**;

FIG. **13** shows another example voltage signal generated by the command current generator of the generator system of FIG. **1**; and

FIG. **14** shows an example voltage signal generated by the command current generator and the corresponding current signal generated by the power converter of the generator system of FIG. **1**.

DETAILED DESCRIPTION OF THE PREFERRED EMBODIMENTS

The generator system **50** of this invention, as illustrated in the function block diagram of FIG. **1**, includes a wind turbine AC generator **52** for converting wind power to

electric power. Essentially a wind turbine **10**, usually comprising two or more large blades **12** mounted on a tower **14** to catch the prevailing winds W, is used to drive the generator **52** to produce electricity. The wind turbine blades **12** extend radially outward from a hub **16**, which is mounted on a rotatable drive shaft **18**. The wind W causes the blades **12** to rotate as indicated by arrow **20** on the drive shaft **18**. The rotating drive shaft **18**, connected by a mechanical linkage **22**, to the linkage **22**, to the generator **52**, rotates the rotor in the generator **52**, as indicated by the arrow **24**, which causes the generator **52** to produce electric power from the power of the wind W acting on the blades **12**. The electric power produced by the generator **52** is delivered to the utility company **58**, which sells the electricity to its customers.

In this invention, the generator **52** is allowed to rotate **24** at speeds that vary with the velocity of the wind W, which allows more efficient and optimum production of electric power from whatever wind W happens to be blowing at any particular time. Generally, the higher the wind W velocity, the faster the turbine **10** rotates, thus the faster the rotor in the generator **52** can rotate **24**. However, since the frequency of the alternating current (AC) produced by the generator **52** is related to how fast the rotor in the generator **52** rotates, the electric power produced by the generator **52** on its output wires **60**, **62**, **64** have to be conditioned and changed or converted by the system **50** of this invention so that only sixty (60) hertz or other standard frequency electric power is delivered on line **30** to the utility **58**.

The purpose of this invention is to enable efficient production of electric power from ambient wind conditions and to deliver the power to a utility power grid at whatever standard frequency is used in the grid. In the United States, the standard frequency is sixty (60) hertz. Other countries or regions have adopted and use different standard frequencies, for example, fifty (50) hertz in many European countries. This invention is equally applicable to any frequency. For purposes of simplicity, this specification will refer to the sixty (60) hertz standard used in the United States and a number of other countries. However, such reference to sixty (60) hertz herein is exemplary only and is not intended to limit the structure, method, or use of the invention in any way. Therefore, other frequencies are considered to be equivalents of sixty (60) hertz for purposes of this invention.

The principal components used in the generator system **50** according to this invention for conditioning the electric power produced by the variable speed generator **52** to produce constant sixty (60) hertz power to the utility **58** includes the excitation controller **54**, the RPM converter **57**, the zero sequence filter **293**, and the transformer **294**. A principle feature of this invention is that both the electrical input signals or currents required to excite the stator windings (not shown in FIG. 1) in the generator **52**, which produce the magnetic fields necessary for the generation of electricity, and to deliver the electric power produced by the generator **52** to the utility company **58**, are fed simultaneously to the generator **52** and to the utility company **58** via the three wires on the leads **60**, **62**, **64**. In other words, the winding signals or currents needed for the generator **52** and the signals or currents needed to deliver the generated electric power to the utility company **58** are both on the leads **60**, **62**, **64** at the same time. However, both the winding signals and the electric power delivery signals on the leads **60**, **62**, **64** have different frequency and phase characteristics, so they can be separated and used for their respective different purposes. A zero sequence filter **293** connected to the leads **60**, **62**, **64** via the power taps and leads **61**, **63**, **65**, respectively, utilizes the different frequency and phase characteristics to effectively pass or transmit the generated electric power to the utility company **58**, while effectively blocking the winding excitation signals on the leads **60**, **62**, **64** from passing to the utility company **58**. Therefore, electric power on the leads **60**, **62**, **64** is conducted via the power taps and leads **61**, **63**, **65** to the utility company **58**, while the excitation signals on the leads **60**, **62**, **64** are conducted to the windings (not shown in FIG. 1) in the generator **52**, where they produce the magnetic fields necessary for the generator **52** to produce electric power. These components and functions will be described in more detail below.

Another principle feature of this invention is the excitation controller **54**, which both produces the winding signals on the leads **60**, **62**, **64** for simultaneously creating the needed magnetic fields in the generator **52** and conditions the electric power on the leads **60**, **62**, **64**. As mentioned above, the winding signals have different frequency and phase characteristics than the electric power, so even though they are carried on the same leads **60**, **62**, **64**, they can be routed to different components to perform different functions. The electric power must have a frequency of sixty (60) hertz to match the conventional electric power standard for the United States or a frequency of fifty (50) hertz for Europe. The excitation controller **54** is designed, as will be described in more detail below, to provide the required sixty (60) hertz frequency transmitted by the zero sequence filter **293** to the utility company **58**, regardless of the speed of the wind W or the resulting angular velocity (rotational speed) of the generator **52**. At the same time, the excitation controller also provides the winding signals or currents at the appropriate frequencies and phases to produce the magnetic fields in the generator **52** that result in optimal electric power generation for the particular angular velocity **24** the generator **52** happens to be rotating at due to the wind W velocity at any point in time. An RPM converter **57** is used to monitor the actual angular velocity (rotational speed) of the rotor in the generator **52** and to feed signals indicative of that information via the lead **65** to the excitation controller **54**. The excitation controller **54** uses the angular velocity information from the RPM converter **57** to configure and set the frequency of the stator signals or currents produced on the leads **60**, **62**, **64** for optimum power generation, as described above.

The electric power connection from the zero sequence filter **293** is preferably made by a transformer **294** to electrically isolate the system **50** from the utility company **58**. The transformer **294** is connected to the zero sequence filter **293** by the lead **295** and to the utility company **58** by the lead **30**.

For purposes of this description, it is helpful to label the three phase balanced positive sequence current signals supplied by the excitation controller **54** on the leads **60**, **62**, **64** to the stator windings of the generator **52** as I_{A+*}, I_{B+*}, I_{C+*}, respectively. The single phase current signals on the leads **60**, **62**, **64** required to deliver the generated power to the output filter **56** are labeled I_{AO*}, I_{BO*}, I_{CO*}, respectively. The excitation controller **54** uses the current sensors **120**, **122**, **124** in a feedback loop **59** to control the amount of the current and the waveform of the respective current signals I_{A+*}, I_{B+*}, I_{C+*} and I_{AO*}, I_{BO*}, I_{CO*} produced on the leads **60**, **62**, **64** to get maximum power production from the generator **52** and to deliver the power in a sixty (60) hertz sinusoidal waveform having approximately unity power factor to the utility company **58**.

The generator **52** is a variable speed generator, thus the output power from the generator **52** depends in part on the

velocity of the wind W, the rotational speed of the rotating rotor in the generator **52**, and the frequency f_+ of the positive sequence current signals I_{A+*}, I_{B+*}, I_{C+*} flowing in the stator windings of the wind generator **52**. The angular velocity or RPM of the rotor in the generator **52** is related to the velocity of the wind W and the power load on the generator **52**. Generally, where there is a constant power load on the generator **52**, thus fairly constant resistance to rotation of the rotor in the generator **52**, the angular velocity of the wind turbine **10** and the generator **52** will vary in direct proportion to the velocity of the wind W. The frequency f_+ of the positive sequence current signals I_{A+*}, I_{B+*}, I_{C+*} flowing in the stator windings of the generator **52** can be changed according to a specific relationship to the changing angular velocity of the wind turbine **10** and the generator **52** so that the output power of the generator **52** is maximized for a particular wind W velocity. The leads **60**, **62**, **64** are connected to the stator windings in the generator **52**, which is represented by the impedances **272**, **274**, **276**, respectively (see FIG. **9**). The impedances **272**, **274**, **276** are primarily inductive and can be, for example, 2.706×10^{-4} henries, but they may also include a small resistance of, for example, 0.0085 ohms. The use of a variable speed generator to produce electric power and an RPM converter to measure the revolutions-per-minute (RPM) of the rotor in the generator **52** are well-known to people having ordinary skill in the art and need not be described in any further detail.

As mentioned above, a significant feature of this invention includes the excitation controller **54**, which provides the current signals I_{A*}, I_{B*}, I_{C*} necessary to excite the stator windings in the generator **52** and to deliver the real electric power generated by the generator **52** to the utility **58**. The output current signals I_{A*}, I_{B*}, I_{C*} for the stator windings from the excitation controller **54** on the leads **60**, **62**, **64**, respectively, each have two components, a positive sequence current component (I_{A+*}, I_{B+*}, I_{C+*}) and a zero sequence current component (I_{AO*}, I_{BO*}, I_{CO*}). Positive sequence signals are a balanced set of signals that are equal in frequency and magnitude. Zero sequence signals are a set of signals that are equal in frequency and magnitude with zero phase displacement between the signals. The positive sequence current component I_{A+*}, I_{B+*}, I_{C+*} are a balanced set of current signals that are equal in magnitude and frequency and displaced from each other by 120° in phase, whereas the zero sequence current components I_{AO*}, I_{BO*}, I_{CO*} are current signals that are equal in magnitude and frequency with zero (0) phase displacement from each other. It is important to note that while zero sequence current signals are used in the present invention, zero sequence current signals are not absolutely required for the present invention. In fact, the current signals I_{AO*}, I_{BO*}, I_{CO*} can have different magnitudes, so long as they have the same frequency and zero phase displacement. For purposes of the present invention, however, the current signals I_{AO*}, I_{BO*}, I_{CO*} will be referred to as zero sequence current signals and, therefore, the current signals I_{AO*}, I_{BO*}, I_{CO*} will have identical magnitudes.

The actual current signal output I_{A*} from the excitation controller **54** on the lead **60** is the sum of the positive sequence current component I_{A+*} plus the zero sequence current component I_{AO*}, as shown by:

$$I_{A*}=I_{A+*}+I_{AO*} \tag{1}$$

Similary, the actual current output signal I_{B*} from the excitation controller **54** on the lead **62** is:

$$I_{B*}=I_{B+*}+I_{BO*} \tag{2}$$

Likewise, the actual current output signal I_{C*} from the excitation controller **54** on the lead **64**:

$$I_{C*}=I_{C+*}+I_{CO*} \tag{3}$$

The current output signals I_{A*}, I_{B*}, I_{C*} from the excitation controller **54** on the leads **60**, **62**, **64**, respectively, are also used in a feedback loop **59** along with the current sensors **120**, **122**, **124** to create input voltage signals to the excitation controller **54** on the leads **121**, **123**, **125**, respectively. The voltage signals created by the current sensors **120**, **122**, **124** on the leads **121**, **123**, **125** are linearly related to the current signals I_{A*}, I_{B*}, I_{C*} flowing on the leads **60**, **62**, **64**. In general terms, if the amplitude of the current signal I_{A*} is too low, the feedback loop **59** causes the excitation controller **54** to increase the amplitude of the current signal I_{A*}. If the amplitude of the current signal I_{A*} is too high, the feedback loop **59** causes the excitation controller **54** to decrease the amplitude of the current signal I_{A*}. Likewise for the current signals I_{B*} and I_{C*}. The excitation controller **54**, the feedback loop **59**, the current sensors **120**, **122**, **124**, and the output current signals I_{A*}, I_{B*}, I_{C*} from the excitation controller **54** on the leads **60**, **62**, **64**, respectively, are discussed in greater detail below.

The positive sequence components I_{A+*}, I_{B+*}, I_{C+*} of the current signals I_{A*}, I_{B*}, I_{C*} created on the leads **60**, **62**, **64** by the excitation controller **54** are the input signals to the generator **52** and provide the balanced three phase excitation currents required in the stator windings of the generator **52** to generate the rotating magnetic field needed in the generator **52** to recover real power from the generator **52**. The zero sequence filter **293** in the output circuit **56** prevents the positive sequence current components I_{A+*}, I_{B+*}, I_{C+*} of the current signals I_{A*}, I_{B*}, I_{C*} from passing through the output circuit **56** to the utility **58**. The positive sequence current signals I_{A+*}, I_{B+*}, I_{C+*} are equal in magnitude and are displaced from each other by 120° in phase. The positive sequence current signals I_{A+*}, I_{B+*}, I_{C+*} have approximately the following waveforms:

$$I_{A+*}=I_{G*}\cos(\omega_+ t) \tag{4}$$

$$I_{B+*}=I_{G*}\cos(\omega_+ t-120°) \tag{5}$$

where I_{G*} is the magnitude of the positive sequence current signals I_{A+*}, I_{B+*}, I_{C+*} and:

$$I_{C+*}=I_{G*}\cos(\omega_+ t+120°) \tag{6}$$

$$\omega_+=2\pi f_+ \tag{7}$$

The frequency f_+ of the positive sequence current signals I_{A+*}, I_{B+*}, I_{C+*} is determined by the RPM information supplied to the excitation controller **54** on the lead **65** by the RPM converter **57** and is chosen by the excitation controller **54** so that the generator **52** generates maximum output power for each particular wind velocity. The frequency f_+ of the positive sequence current signals I_{A+*}, I_{B+*}, I_{C+*}, can be, for example, between sixty (60) and 120 hertz. The positive sequence current signals I_{A+*}, I_{B+*}, I_{C+*} are discussed in more detail below.

The zero sequence components I_{AO*}, I_{BO*}, I_{CO*} of the current signals I_{A*}, I_{B*}, I_{C*} created on the leads **60**, **62**, **64** by the excitation controller **54** are the input signals to the output filter **293** and allow the real power generated by the generator **52** to be supplied to the utility **58**. The zero sequence current signals I_{AO*}, I_{BO*}, I_{CO*} are equal in magnitude, have a frequency of sixty (60) hertz, and have

zero phase displacement from each other. The zero sequence current signals I_{AO*}, I_{BO*}, I_{CO*} have approximately the following waveforms:

$$I_{AO*}=I_{F*}\cos(\omega_0 t) \quad (8)$$

$$I_{BO*}=I_{F*}\cos(\omega_0 t) \quad (9)$$

$$I_{CO*}=I_{F*}\cos(\omega_0 t) \quad (10)$$

where I_{F*} is the magnitude of the zero sequence current signals I_{AO*}, I_{BO*}, I_{CO*}, and:

$$\omega_0=2\Pi f_0 \quad (11)$$

where the frequency f_0 of the zero sequence current signals I_{AO*}, I_{BO*}, I_{CO*} is sixty (60) hertz. The star connection of the impedances **272**, **274**, **276** in the stator windings of the generator **52**, as shown in FIG. **9**, prevents the zero sequence currents I_{AO*}, I_{BO*}, I_{CO*} from entering the generator **52**, since the total current entering or exiting the node **278** in the generator **52** must be equal to zero.

In order to have the real power created by the generator **52** delivered to the utility **58** at unity power factor, the zero sequence current signals I_{AO*}, I_{BO*}, I_{CO*} must be completely in phase with the voltage signal in the utility **58**. As will be discussed in more detail below, this condition can be accomplished by using the voltage signal of the utility **58** as a template to force the zero sequence current signals I_{AO*}, I_{BO*}, I_{CO*} to be in phase with the signals in the utility **58**. The zero sequence current signals I_{AO*}, I_{BO*}, I_{CO*} are also discussed in more detail below.

Now referring to FIG. **2**, the operational block diagram for the generator system **50** is shown in more detail. The excitation controller **54** includes the command current generator **66**, the error detectors **68**, **70**, **72**, the amplifiers **74**, **76**, **78**, the comparators **80**, **82**, **84**, the lock out circuits **86**, **88**, **90**, the triangle waveform generator **92**, the power converter **94**, the capacitor **96**, the current sensors **120**, **122**, **124**, the voltage sensor **322**, the optical isolators **244**, **258**, **400**, **402**, **404**, **406**, the switch **326**, and the rectifier **327**.

When the generator system **50** becomes operational, the switch **326** is closed and the voltage signals in the utility **58** are used along with the switch **326** and the rectifier **327** to charge the capacitor **96** to, for example, 800 volts. After the capacitor **96** is fully charged, the switch **326** is opened. When the rotor in the generator **52** begins to rotate due to the action of the wind, the RPM (revolutions per minute) converter **57** begins to continuously monitor or measure the RPM or angular velocity of the rotating rotor in the generator **52**. RPM (revolutions per minute) is a measure of angular velocity or rotational speed of a rotating component or field, as is well-known to persons skilled in the art. Therefore, these terminologies are used interchangeably and are considered to be equivalents for purposes of this invention. The RPM converter **57** creates an output voltage signal on the lead **65** which is linearly proportional to the RPM or angular velocity of the rotating rotor in the generator **52** and which is also the input signal to the command current generator **66**, as will be discussed in more detail below.

The command current generator **66** creates three voltage signals V_A, V_B, V_C on the leads **98**, **100**, **102**, respectively. The output voltage signals V_A, V_B, V_C from the command current generator **66** each have two components, a positive sequence voltage component (V_{A+}, V_{B+}, V_{C+}) and a zero sequence voltage component (V_{AO}, V_{BO}, V_{CO}). Therefore, the voltage signal output from the command current generator **66** on the lead **98** is V_A and:

$$V_A=V_{A+}+V_{AO} \quad (12)$$

Likewise, the voltage signal output from the command current generator **66** on the lead **100** is V_B and:

$$V_B=V_{B+}+V_{BO} \quad (13)$$

Similarly, the voltage signal output from the command current generator **66** on the lead **102** is V_C and:

$$V_C=V_{C+}+V_{CO} \quad (14)$$

Referring to FIG. **11**, an example waveform for the voltage signal V_A is shown in graph **1**.

The voltage signal V_A is composed of two voltage signals, V_{AO} and V_{A+}, which are shown in graphs **2**, **3**, respectively, in FIG. **11**. Referring to FIG. **12**, an example waveform for the voltage signal V_B is shown in graph **1**. The voltage signal V_B is composed of two voltage signals, V_{BO} and V_{BO+}, which are shown in graphs **2**, **3**, respectively, in FIG. **12**. Referring to FIG. **13**, an example waveform for the voltage signal V_C is shown in graph **1**. The voltage signal V_C is composed of two voltage signals, V_{CO} and V_{C+}, which are shown in graphs **2**, **3**, respectively, in FIG. **13**. The voltage signals V_A, V_{AO}, V_{A+}, V_B, V_{BO}, V_{B+}, V_C, V_{CO}, V_{C+} are discussed in more detail below. The use of a microprocessor to generate voltage signals is well known to people having ordinary skill in the art. For example, the 8088 manufactured by Intel can be used as the command current generator **66** in this invention.

As will be discussed in more detail below, the positive sequence voltage signals V_{A+}, V_{BO+}, V_{C+} are linearly related to the positive sequence currents I_{A+*}, I_{B+*}, I_{C+*}, which are the input current signals to the windings of generator **52**. The frequency of the three positive sequence voltage signals V_{A+}, V_{BO+}, V_{C+} depends on the RPM of the rotor in the generator **52**, which is dependent on the wind velocity and to some extent on the electrical load on the generator system. The higher the wind velocity acting on the wind turbine blades **12**, of course, the more wind energy there is to drive the rotor at a higher RPM. The higher the electrical load on the generator, however, the more resistance there is to rotor rotation. Therefore, the actual RPM of the rotor at any particular time results from a balance between the wind velocity and the magnitude of the electrical load at that time. As previously discussed, the output power created by the generator **52** depends in part on the RPM of the rotor in the generator **52** and the frequency of the positive sequence current signals I_{A+*}, I_{B+*}, I_{C+*} flowing in the stator windings of the generator **52**. For a specific wind velocity and consequent RPM of the rotating rotor in the generator **52**, there is a particular frequency for the positive sequence current signals I_{A+*}, I_{B+*}, I_{CO+*} that maximizes the electrical energy or real power generated by the generator **52**. The velocity of the wind is for a given load directly proportional to the RPM of the rotor in the generator **52**, as described above, which is measured by the RPM converter **57**. The RPM converter **57** is shown schematically connected to the generator **52** by the lead **65**. The RPM converter **57** provides a continuous voltage signal to the command current generator **66** on the lead **65** that represents the RPM of the rotor in the generator **52**.

The frequency f_+ of the positive sequence current signals I_{A+*}, I_{B+*}, I_{CO+*} is equal to the frequency of the positive sequence voltage signals V_{A+}, V_{BO+}, V_{C+}, as will be described in more detail below. Therefore, the frequency of the positive sequence voltage signals V_{A+}, V_{BO+}, V_{C+} is continuously adjusted by the command current generator **66** to create the frequency f_+ of the positive sequence current

signals I_{A+*}, I_{B+*}, I_{C+*} that maximizes the real power generated by the generator **52** at the varying wind velocities. The information relating the RPM of the rotor in the generator **52** to optimal frequency F_+ is stored in the command current generator **66** in, for example, a look-up table. The optimal frequency F_+ can also be computed from an equation or a set of equations that are stored in the command current generator **52** where the optimal frequency is a function of the RPM of the rotor in the generator **52**. The relationship between the RPM of the rotor in the generator **52** and the optimal frequency F_+ can be computed by equations or determined empirically and can also be different for different types of generators. The positive sequence voltage signals V_{A+}, V_{B0+}, V_{C+} generated by the command current generator **66** are equal in magnitude, are displaced from each other by 120° in phase, and have the following waveforms:

$$V_{A+}=V_G \cos(\omega_+ t) \quad (15)$$

$$V_{B+}=V_G \cos(\omega_+ t-120°) \quad (16)$$

$$V_{C+}=V_G \cos(\omega_+ t+120°) \quad (17)$$

where V_G is the magnitude of the positive sequence voltage signals V_{A+}, V_{B0+}, V_{C+}. The ω_+ in the equations 15–17 is the same as the ω_+ in the equations 4–6.

As will be discussed in more detail below, the zero sequence voltages V_{A0}, V_{B0}, V_{C0} are linearly related to the zero sequence current signals I_{A0*}, I_{B0*}, I_{C0*}, which are the input current signals to the output filter **56** that allow the generated power to be delivered to the utility **58**. The zero sequence voltage signals V_{A0}, V_{B0}, V_{C0} are equal in magnitude, have a frequency of sixty (60) hertz, have zero phase displacement from each other, and have the following waveforms:

$$V_{A0}=V_F \cos(\omega_0 t) \quad (18)$$

$$V_{B0}=V_F \cos(\omega_0 t) \quad (19)$$

$$V_{C0}=V_F \cos(\omega_0 t) \quad (20)$$

where V_F is the magnitude of the zero sequence voltage signals V_{A0}, V_{B0}, V_{C0}. The ω_0 in the equations 18–20 is also the same as the ω_0 in the equations 8–10. As previously discussed, the zero sequence current signals I_{A0*}, I_{B0*}, I_{C0*} must be completely in phase with the voltage signal in the utility **58** so that the power supplied to the utility has a unity power factor. This objective can be accomplished by using the voltage signal of the utility **58** as a template to force the zero sequence current signals I_{A0*}, I_{B0*}, I_{C0*} to be in phase with the voltage signal in the utility **58**. More specifically, the transformer **294** creates a voltage signal on the lead **320** that is in phase with the voltage signal in the utility **58**. The command current generator **66** creates the zero sequence voltage signals V_{A0}, V_{B0}, V_{C0} on the leads **98**, **100**, **102**, respectively, with the needed phase so that the zero sequence current signals I_{A0}, I_{B0}, I_{C0*} from the power converter **94** on the leads **60**, **62**, **64**, respectively, are completely in phase with the voltage signal in the utility **58**.

The output voltage signal V_A from the command current generator **66** on the lead **98** is an input signal to the error detector **68**. Likewise, the output voltage signal V_B from the command current generator **66** on the lead **100** is an input signal to the error detector **70**, and the output voltage signal V_C from the command current generator **66** on the lead **102** is an input signal to the error detector **72**.

The current sensor **120** senses the current signal I_{A*} produced on the lead **60** by the power converter **94** and creates a corresponding voltage signal V_{A*} on the lead **121**. Likewise, the current sensor **122** senses the current signal I_{B*} produced on the lead **62** by the power converter **94** and creates a corresponding voltage signal V_{B*} on the lead **123**, and the current sensor **124** senses the current signal I_{C*} produced on the lead **64** by the power converter **94** and creates a corresponding voltage signal V_{C*} on the lead **125**. The current sensors **120**, **122**, **124** do not disturb or change the current signals I_{A*}, I_{B*}, I_{C*} on the leads **60**, **62**, **64**. Current sensors and the use of current sensors are well known to people having ordinary skill in the art and need not be described in any further detail.

The output voltage signal V_{A*} from the current sensor **120** on the lead **121** is an input signal to the error detector **68**. Likewise, the output voltage signal V_{B*} from the current sensor **122** on the lead **123** is an input signal to the error detector **70** and the output voltage signal V_{C*} from the current sensor **124** on the lead **125** is an input signal to the error detector **72**.

The signal processing of the voltage signals V_A, V_{A*} in the error detector **68**, the amplifier **74**, the comparator **80**, the lockout circuit **86**, and the optical isolators **244**, **258** is identical to the signal processing of the voltage signals V_B, V_{B*} in the error detector **70**, the amplifier **76**, the comparator **82**, the lockout circuit **88**, and the optical isolators **400**, **402**, which are both identical to the signal processing of the voltage signals V_{C*}, V_{C*} in the error detector **72**, the amplifier **78**, the comparator **84**, the lockout circuit **90**, and the optical isolators **404**, **406**. Therefore, only the signal processing for the voltage signals V_A and V_{A*} is discussed in further detail.

The error detector **68** determines the difference between the voltage signal V_A created by the command current generator **66** on the lead **98** and the voltage signal V_{A*} created by the current sensor **120** on the lead **121**. The difference between the two voltage signals V_A, V_{A*} is the error voltage signal V_{Aerr} which is also the output signal from the error detector **68** on the lead **104** and the input signal to the amplifier **74**. The amplifier **74** amplifies the voltage signal V_{Aerr} to strengthen it and provide a stronger input signal to the comparator **80**. The output voltage signal V_{Aamp} from the amplifier **74** on the lead **106** is an input voltage signal to the comparator **80**. The error detector **68** and the amplifier **74** are discussed in more detail below.

The comparator **80** continuously compares the input voltage signal V_{Aamp} on the lead **106** with the input voltage signal V_{Atri} on the lead **108**. The voltage signal V_{Atri} on the lead **108** is the output signal from the triangle waveform generator **92**. The voltage signal V_{Atri} has a triangular waveform and a frequency of, for example, 5,000 hertz. If the instantaneous amplitude of the voltage signal V_{Atri} is greater than the instantaneous amplitude of the voltage signal V_{Aamp}, the output voltage signal V_{Acom} from the comparator **80** on the lead **110** is approximately a five (5) volt voltage signal. If the instantaneous amplitude of the voltage signal V_{Atri} is less than the instantaneous amplitude of the voltage signal V_{Aamp}, the output voltage signal V_{Acom} from the comparator **80** on the lead **110** is approximately a zero (0) voltage signal. Therefore, the output voltage signal V_{Atri} from the comparator **80** on the lead **110** is a nonperiodic pulsed signal where the duration of each pulse is linearly related to the amount of time that the amplitude of the voltage signal V_{Atri} is greater than the amplitude of the voltage signal V_{Aamp} and the duration between pulses is linearly related to the amount of time that the amplitude of the voltage signal V_{Atri} is less than the amplitude of the voltage signal V_{Aamp}. An example waveform for the voltage

signal V_{Acom} is shown in FIG. 3. The comparator **80** is discussed in more detail below.

The output voltage signal V_{Acom} from the comparator **80** on the lead **110** is the input signal to the lock out circuit **86**. The lock out circuit **86** converts the pulsed voltage signal V_{Acom} into two distinct pulsed voltage signals V_{A1}, V_{A2}. The pulses of the voltage signals V_{Acom}, V_{A1}, V_{A2} are shown in FIG. 3. The pulsed voltage signals V_{A1}, V_{A2} have a minimum value of approximately zero volts and a maximum value of, for example, five volts. As shown in FIG. 3, the voltage signals V_{A1}, V_{A2} never have their maximum value simultaneously due to the delay created by the lock out circuit **86**. That is, while the voltage signal V_{A1} is at its maximum value, the voltage signal V_{A2} is at its minimum value, and vice versa. The voltage signals V_{A1}, V_{A2} can, however, have their minimum values simultaneously, as shown in FIG. 3. The lock out circuit **86** is discussed in more detail below.

The output voltage signals V_{A1}, V_{A2} from the lock out circuit **86** on the leads **242**, **256** are the input signals the optical isolators **244**, **258**. The output voltage signal V_{A1} from the optical isolator **244** on the lead **112** is the same as the input voltage signal to the optical isolator **244** on the lead **242**. Similarly, the output voltage signal V_{A2} from the optical isolator **258** on the lead **114** is the same as the input voltage signal to the optical isolator **258** on the lead **256**. The optical isolator **244** electrically isolates the leads **242**, **112** so that there is no direct electrical connection between the leads **242**, **112**. Similarly, the optical isolator **258** electrically isolates the leads **256**, **114** so that there is no direct electrical connection between the leads **256**, **114**. The optical isolators **244**, **258** provide electrical isolation and protection for the circuit from the power generated by the generator **52**.

The output voltage signals from the optical isolators **244**, **258** are the input signals to the power converter **94** on the leads **112**, **114**, respectively. The voltage signals V_{A1} and V_{A2} activate power switches **116**, **118** (shown in FIG. 9), respectively. Selectively turning the power switches **116** and **118** "on" and "off" enables the power converter **94** to increase or decrease the current signal I_{A*} flowing on the lead **60**. For example, if the current I_{A*} is positive, turning the power switch **116** "on" and the power switch **118** "off" allows current to flow positively through the power switch **116** to increase the current I_{A*}. Turning the power switch **116** "off" and the power switch **118** "on" allows current to flow negatively through the power switch **118** to decrease the current I_{A*}. If the current I_{A*} is negative, turning the power switch **116** "on" and the power switch **118** "off" allows current to flow negatively through the power switch **116** to increase the current I_{A*}. Turning the power switch **116** "off" and the power switch **118** "on" allows current to flow positively through the power switch **118** to decrease the current I_{A*}. Because the voltage signals V_{A1}, V_{A2} will never have their maximum values at the same time, the power switches **116**, **118** will never be on at the same time. By controlling the voltage signals V_{A1}, V_{A2} the power switches **116** and **118** can be selectively and individually switched on and off in such a way that any desired output current signal I_{A*} can be produced on the lead **60**, including a current signal I_{A*} that maximizes the generated power and maximizes the power transfer to the utility **58**.

Ideally, the current signal I_{A*} produced on the lead **60** by the power converter **94** is a smooth current signal. Creating a smooth current signal I_{A*}, however, requires that the power switches **116** and **118** be able to turn on an off at an extremely high frequency, which may be practically impossible. In addition, there is a power loss in the power switches **116**, **118** every time the power switches **116**, **118** are turned on or off. Therefore, in the preferred embodiment of the generator system **50**, the frequency of the switching of the power switches **116**, **118** is limited to extend the useful life of the power switches **116**, **118** by the action of the comparator **80** and the triangular waveform generator **92** to the frequency of the triangular waveform signal created by the triangular waveform generator **92**.

As discussed above, a feedback loop is created with the command current generator **66**, the error detector **68**, the amplifier **74**, the comparator **80**, the lock out circuit **86**, the optical isolators **244**, **258**, the power converter **94**, the capacitor **96**, the current sensor **120**, and the voltage sensor **322**. If the amplitude of the current signal I_{A*} from the power converter **94** on the lead **60** is too low, the current sensor **120**, the voltage sensor **322**, the command current generator **66**, the error detector **68**, the amplifier **74**, the comparator **80**, the lock out circuit **86**, and the optical isolators **244**, **258** cause the power converter **94** and the capacitor **96** to increase the amplitude of the current signal I_{A*}. If the amplitude of the current signal I_{A*} from the power converter **94** on the lead **60** is too high, the voltage sensor **322**, the current sensor **120**, the command current generator **66**, the error detector **68**, the amplifier **74**, the comparator **80**, the lock out circuit **86**, and the optical isolators **244**, **258** cause the power converter **94** and the capacitor **96** to decrease the amplitude of the current signal I_{A*}. The power circuit **94**, the capacitor **96**, the power switches **116**, **118**, and the operation of the feedback loop are discussed in more detail below.

As previously discussed, the output current signals I_{A*}, I_{B*}, I_{CO*} from the power converter **94** on the leads **60**, **62**, **64**, respectively, each have two components, a positive sequence current component (I_{A+*}, I_{B+*}, I_{C+*}) and a zero sequence current component (I_{AO*}, I_{BO*}, I_{CO*}). The current output signal from the power converter **94** on the lead **60** is I_{A*} and:

$$I_{A*}=I_{A+*}+I_{AO*} \tag{21}$$

The current output signal from the power converter **94** on the lead **62** is I_{B*} and:

$$I_{B*}=I_{B+*}+I_{BO*} \tag{22}$$

The current output signal from the power converter **94** on the lead **64** is I_{C*} and:

$$I_{C*}=I_{C+*}+I_{CO*} \tag{23}$$

Therefore, from equations 4–6, 8–10, and 21–23,

$$I_{A*}=I_{G*}\cos(\omega_+t)+I_{F*}\cos(\omega_0t+\alpha) \tag{24}$$

$$I_{B*}=I_{G*}\cos(\omega_+t-120°)+I_{F*}\cos(\omega_0t+\alpha) \tag{25}$$

$$I_{C*}=I_{G*}\cos(\omega_+t+120°)+I_{F*}\cos(\omega_0t+\alpha) \tag{26}$$

As previously discussed and as will be discussed in more detail below, the current signals I_{A*}, I_{B*}, I_{C*} supply the current necessary to excite the stator windings in the generator **52** and to deliver the generated power to the utility **58**. More importantly, the frequency f_+ of the positive sequence current components I_{A+*}, I_{B+*}, I_{C+*} of the current signals I_{A*}, I_{B*}, I_{C*} is continuously adjusted by the command current generator **66** in response to the varying wind velocity to the frequency that maximizes the real power generated by the generator **52**. In addition, the magnitude I_F of the zero sequence current components I_{AO*}, I_{BO*}, I_{CO*} of the current signals I_{A*} I_{B*}, I_{C*} is continuously adjusted by the command current generator **66** to ensure that all of the real power

generated by the generator **52** is transferred to the utility **58**. The real power transferred to the utility **58** is single phase, sinusoidal, and has a unity power factor at sixty (60) hertz.

More detailed exemplary schematic diagrams for the significant parts of the electronic circuitry in the generator system **50** are shown in FIGS. **5–10**. Referring now to FIG. **5**, the output voltage signal V_A from the command current generator **66** on the lead **98** is an input signal to the error detector **68**. In addition, the output voltage signal V_{A*} from the current sensor **120** on the lead **121** is also an input signal to the error detector **68**. The input voltage signal V_A on the lead **98** passes through the inverter **138** formed by the resistor **140**, the resistor **142**, and the operational amplifier **144**. If the resistor **140** and the resistor **142** are equal in value, for example, if they are both equal to 10,000 ohms, the output voltage signal from the inverter **138** on the lead **146** is equal to $-V_{A*}$.

The voltage signal $-V_A$ from the inverter **138** on the lead **146** and the voltage signal V_{A*} on the lead **121** are the input signals to the summing circuit **147** formed by the resistor **148** (R_{148}), the resistor **150** (R_{150}), the resistor **152** (R_{152}), and the operational amplifier **154**. The resistor **148**, the resistor **150**, and the resistor **152** can have equal values, for example, all three can be 10,000 ohms. The output voltage signal from the summing circuit **147** and the error detector **68** on the lead **68** is V_{Aerr}, the difference between the two voltage signals V_A and V_{A*}. The voltage signal V_{Aerr} is equal to:

$$V_{Aerr}=\frac{R_{152}V_A}{R_{148}}-\frac{R_{152}V_{A*}}{R_{150}} \tag{27}$$

Therefore, if the resistors **148**, **150**, **152** have equal values, then:

$$V_{Aerr}=V_A-V_{A*} \tag{28}$$

The output voltage signal V_{Aerr} from the error detector **68** on the lead **104** is the input signal to the non-inverting amplifier **74** which amplifies the voltage signal V_{Aerr} to strengthen the voltage signal. The amplifier **74** includes the resistor **156** (R_{156}), the resistor **158** (R_{158}), and the operational amplifier **160**. The resistor **156** can have a value of, for example, 10,000 ohms. The resistor **158** can have a value of, for example, 10,000 ohms. The amplified output voltage signal V_{Aamp} from the amplifier **74** on the lead **106** is equal to:

$$V_{Aamp}=\frac{R_{158}+R_{156}}{R_{158}}\,V_{Aerr} \tag{29}$$

The output voltage signal V_{Aamp} from the amplifier **74** on the lead **106** is an input signal to the comparator **80**.

Now referring to FIG. **6**, the comparator **80** has an input voltage signal V_{Aamp} on the lead **106** from the amplifier **74** and an input voltage signal V_{Atri} on the lead **108** from the triangle waveform generator **92**. The triangle waveform generator **92**, as shown in FIG. **7**, includes the resistors **162**, **164**, **166**, **168**, **170**, **172**, the capacitor **174**, and the operational amplifiers **176**, **178**, **180**, **182**. The resistor **162** can have a value of, for example, 10,000 ohms. The resistor **164** can have a value of, for example, 10,000 ohms. The resistor **166** can have a value of, for example, 10,000 ohms. The resistor **168** can have a value of, for example, 30,000 ohms. The resistor **170** can have a value of, for example, 10,000 ohms. The resistor **172** can have a value of, for example, 20,000 ohms. The capacitor **174** can have a value of, for example, 0.01 microfarads.

The resistors **162**, **164**, **166**, **168**, the capacitor **174**, and the operational amplifiers **176**, **178**, **180** create a triangle wave voltage signal on the lead **184** which is the input signal to the inverting amplifier composed of the resistors **170**, **172** and the operational amplifier **182**. The output triangular wave voltage signal V_{Atri} from the operational amplifier **182** on the lead **108** is an amplified version of the triangle wave voltage signal on the lead **184**. The triangular wave voltage signal V_{Atri} on the lead **108** is an input signal to the comparator **80**.

Referring back to FIG. **6**, the comparator **80** includes the resistors **127**, **134**, the voltage comparator **128**, the transistor **132**, and the DC voltage signal provided by a power supply (not shown) on the lead **136**. The resistor **127** is used to prevent saturation of the voltage comparator **128**. As previously discussed, the comparator compares the two voltage signals V_{Atri}, V_{Aamp}. If the voltage signal V_{Atri} is higher that the voltage signal V_{Aamp}, the output of the voltage comparator **128** on the lead **130** is a low logic signal and a large negative voltage signal. Conversely, if the voltage signal V_{Atri} is less than the voltage signal V_{Aamp}, the output of the voltage comparator **128** on the lead **130** is a high logic signal and a large positive voltage signal. The output voltage signal from the voltage comparator **128** on the lead **130** is the input signal to the transistor **132**.

If the output signal from the voltage comparator **128** on the lead **130** has a high voltage level, the transistor **132** will be activated and the voltage output signal V_{Acom} from the comparator **80** on the lead **110** will have a value of approximately zero volts. If the output signal from the voltage comparator **128** on the lead **130** has a low voltage level, the transistor **132** will not be activated and the output voltage signal V_{Acom} from the comparator **80** on the lead **110** will have be approximately the same voltage that is on the lead **136**. The resistor **127** can have a value of, for example, 1,000 ohms. The resistor **134** can have a value of, for example, 10,000 ohms. The DC voltage level on the lead **136** can be, for example, five volts. The LM311 Voltage Comparator manufactured by the National Semiconductor Corporation can be used as the voltage comparator **128** in this invention.

Now referring to FIG. **8**, the output voltage signal V_{Acom} from the comparator **80** on the lead **110** is the input signal to the lock out circuit **86**. The voltage signal V_{Acom} is the input signal to the logic inverter **186** and an input signal to the operational amplifier **188**. The logic inverter **186**, the operational amplifiers **188**, **194**, the resistors **195**, **197**, and the DC voltage level on the lead **197** are used to create two pulsed voltage signals V_{P1}, V_{P2} on the leads **198**, **200** having sharp defined and non-skewed edges. The two pulsed voltage signals V_{P1}, V_{P2} have opposite logical values. That is, when the voltage signal V_{P1} has a high logic value, the voltage signal V_{P2} will have a low logic value, and vice versa. The voltage signals V_{Acom}, V_{P1}, V_{P2} are shown in FIG. **4**. While the voltage signal V_{Acom} shown in FIGS. **3** and **4** has a sharp pulse waveform with no skewed or slanted edges, the voltage signal V_{Acom} can, in actuality, have skewed edges or a minimum value greater than or less than zero volts. Therefore, it is preferred to create the sharper edged voltage signals V_{P1}, V_{P2}.

The logic inverter **186** converts a high logic voltage signal on the lead **110** to a low logic voltage signal on the lead **189** and converts a low logic voltage signal on the lead **110** to a high logic voltage signal on the lead **189**. The output voltage signal from the inverter **186** on the lead **189** is an input signal to the operational amplifier **194**. By using the inverter **186**, the logic voltage signal on the lead **110** will be opposite from the logic voltage signal on the lead **189**. That is, when the voltage signal on the lead **110** has a high logic value, the voltage signal on the lead **189** will have a low voltage value, and vice versa. The resistors **196**, **195** and the DC voltage

level on the lead **197** provided by a power supply (not shown) are used as a voltage divider to supply the positive terminals of the operational amplifiers **188**, **194**, both of which are connected to the lead **191**, with a constant voltage reference signal. The resistors **195**, **196** can both have a value of, for example, 10,000 ohms. The DC voltage level provided on the lead **197** can be, for example, five volts. Therefore, the positive terminals of the operational amplifiers **188**, **194** connected to the lead **191** will have a constant voltage of approximately 2.5 volts.

The output voltage signal V_{P1} from the operational amplifier **188** on the lead **198** will have a high logic signal if the input signal to the operational amplifier on the lead **110** is greater than 2.5 volts. The output voltage signal V_{P1} from the operational amplifier **188** on the lead **198** will have a low logic signal if the input signal to the operational amplifier **188** on the lead **110** is lower than 2.5 volts. Similarly, the output voltage signal V_{P2} from the operational amplifier **194** on the lead **200** will have a high logic signal if the input signal to the operational amplifier **194** on the lead **189** is greater than 2.5 volts. The output voltage signal V_{P2} from the operational amplifier **194** on the lead **200** will have a low logic signal if the input signal to the operational amplifier **194** on the lead **189** is lower than 2.5 volts.

The resistor **202**, the capacitor **204**, and the DC voltage level provided by a power supply (not shown) on the lead **205** act to delay and skew the leading edges of the pulses in the voltage signal V_{P1} on the lead **198** to create the voltage signal V_{S1}. Likewise, the resistor **206**, the capacitor **208**, and the DC voltage level provided by a power supply (not shown) on the lead **209** act to delay and skew the leading edges of the pulses in the voltage signal V_{P2} on the lead **200** to create the voltage signal V_2. The voltage signals V_{S1} and V_{S2} are shown in FIG. **4**. The resistors **202**, **206** can both have a value of, for example, 5,600 ohms. The capacitors **204**, **208** can both have a value of, for example, 0.01 microfarads. The DC voltage level provided on the leads **205**, **209** can both be, for example, five volts.

The resistor **210**, the variable resistor **212** and the DC voltage level on the lead **214** provided by a power supply (not shown) are used as a voltage divider to supply the positive terminals of the operational amplifiers **216**, **218** with a constant voltage level reference signal. The voltage reference level can be, for example, 2.5 volts, and can be changed by adjusting the variable resistor **212**. The resistor **210** can have a value of, for example, 10,000 ohms. The variable resistor **212** can have a range varying between, for example, zero ohms and 20,000 ohms. The DC voltage level provided on the lead **214** can be, for example, five volts.

The operational amplifier **216**, the resistors **220**, **222**, **224**, and the DC voltage level on the lead **214** provided by a power supply (not shown) on the lead **226** act as a high gain comparator. If the voltage level of the signal V_{S1} is greater than the voltage level of the reference voltage supplied by the resistors **210**, **212**, and the DC voltage level on the lead **214**, the output signal on the lead **228** will have a high logic voltage value. If the voltage level of the signal V_{S1} is less than the voltage level of the reference voltage supplied by the resistors **210**, **212**, and the voltage on the lead **214**, the output signal on the lead **228** will have a low logic voltage value. A high gain comparator is used so that small differences in the voltage levels being compared can be detected. The operational amplifier **218**, the resistors **230**, **232**, **234**, and the DC voltage level on the lead **236** provided by a power supply (not shown) on the lead **226** also function as a high gain comparator in a similar manner to the one described above. The DC voltage levels provided on the leads **226**, **236** can both be, for example, five volts. The resistors **220**, **224**, **230**, **234** can all have a value of, for example, 10,000 ohms. The resistors **222**, **232** can both have a value of, for example, 1,000,000 ohms.

The output voltage signal from the operational amplifier **216** on the lead **228** is the input signal to the buffer amplifier **240** which lowers the impedance of the voltage signal on the lead **228** and provides an input voltage signal on the lead **242** to the optical isolator **244**. The resistor **245** and the DC voltage level on the lead **246** provided by a power supply (not shown) are used as a pull-up resistor circuit. The buffer amplifier **250**, the resistor **252**, and the DC voltage level on the lead **254** work in a similar fashion and provide an output voltage signal on the lead **256** which is an input signal to the optical isolator **258**. The resistors **245**, **252** can both have a value of, for example, 10,000 ohms. The DC voltage level provided on the leads **246**, **254** can both be, for example, five volts. The use of a buffer amplifier is well known to people having ordinary skill in the art. For example, the DM5417 Hex Buffers with High voltage Open-Collector Outputs manufactured by the National Semiconductor Corporation can be used as the buffer amplifiers **240**, **250** in this invention.

The output voltage signal V_{A1} from the optical isolator **244** on the lead **112** is the same as the input voltage signal to the optical isolator **244** on the lead **242**. Similarly, the output voltage signal V_{A2} from the optical isolator **258** on the lead **114** is the same as the input voltage signal to the optical isolator **258** on the lead **256**. The optical isolator **244** electrically isolates the leads **242**, **112** so that there is no direct electrical connection between the leads **242**, **112**. Similarly, the optical isolator **258** electrically isolates the leads **256**, **114** so that there is no direct electrical connection between the leads **256**, **114**. The optical isolators **244**, **258** provide electrical isolation and protection for the circuit from the power generated by the generator **52**. Optical isolators and the use of optical isolators are well known to people having ordinary skill in the art. For example, the EXB356 Base Drive Module manufactured by Fuji can be used as the optical isolators **244**, **258** in this invention.

Now referring to FIG. **9**. The output voltage signals V_{A1} and V_{A2} from the optical isolators **244**, **258** on the leads **112**, **114**, respectively, are the input signals to the power converter **94**. As previously discussed, the purpose of the power converter **94** is to generate the current signals I_{A*}, I_{B*}, I_{C*} on the leads **60**, **62**, **64**, respectively, that are necessary to excite the stator windings in the generator **52** and to deliver real electric power to the utility **58**. The current signals I_{A*}, I_{B*}, I_{C*} are linearly related to the voltage signals V_A, V_B, V_C produced by the command current generator **66** on the leads **98**, **100**, **102**, respectively. Referring to FIG. **14**, an example waveform for the current signal I_{A*} is shown in graph **1** and example waveform for the voltage signal V_A is shown in graph **2**.

As previously discussed and shown in FIGS. **2** and **10**, when the generator system **50** becomes operational, the voltage signals in the utility **58** are used to charge the capacitor **96**. After the switch **326** is closed, the transformer **294** and the rectifier **327** transform the voltage signals from the utility **58** into a DC voltage signal to charge the capacitor **96**. After the capacitor **96** is fully charged to, for example, 800 volts, the switch **326** is opened and the transformer **294** is disconnected from the capacitor **96**.

Now referring to FIGS. **8** and **9**, after the capacitor **96** is charged and the rotor in the generator begins to rotate, the voltage signals V_{A1} and V_{A2} created by the lock out circuit **86** activate and deactivate the transistors **260**, **262**,

respectively, to create the desired current signal I_{A*} flowing from the power converter **94** on the lead **60**. The transistors **260**, **262**, along with the diodes **264**, **266**, comprise the power switches **116**, **118** previously discussed. When the voltage signal V_{A1} is at its maximum value, the transistor **260** is activated and the transistor **262** is not activated. Likewise, when the voltage signal V_{A2} is at its maximum value, the transistor **260** is not activated and the transistor **262** is activated. Due to the action of the lock out circuit **86**, the transistors **260**, **262** will never be activated at the same time because the two voltage signals V_{A1}, V_{A2} will never be at their maximum values simultaneously.

In general, when the transistor **260** is activated and the transistor **262** is not activated, the current flowing out of the power converter **94** on the lead **60** and through the impedance increases. When the transistor **260** is not activated and the transistor **262** is activated, the current flowing out of the power converter **94** on the lead **60** and through the impedance **272** decreases. As previously discussed, the impedance **272** of the stator winding is primarily inductive but may also include a small resistance.

More specifically, when the current I_{A*} is flowing out of the power converter **94** on the lead **60**, the transistor **260** is activated, the transistor **262** is not activated, current flows through the transistor **260**, and the current flowing out of the power converter **94** on the lead **60** increases. Current does not flow though the transistor **262** because the transistor **262** is not activated. Furthermore, current does not flow through the diodes **264**, **266** because the diodes **264**, **266** are reverse biased.

When the current I_{A*} is flowing out of the power converter **94** on the lead **60**, the transistor **260** is not activated, the transistor **262** is activated, the diode **264** becomes forward biased, current flows through the diode **266**, and the current flowing out of the power converter **94** on the lead **60** decreases. Current does not flow through the transistor **260** because the transistor **260** is not activated. Current does not flow through the diode **264** because the diode **264** is reverse biased.

When the current I_{A*} is flowing into the power converter **94** on the lead **60**, the transistor **260** is activated, the transistor **262** is not activated, the diode **266** becomes forward biased, current flows through the diode **264**, and the current flowing into the power converter **94** on the lead **60** decreases. Current does not flow though the transistor **262** because the transistor **262** is not activated. Current does not flow through the diode **266** because the diode **266** is reverse biased.

When the current I_{A*} is flowing into the power converter **94** on the lead **60**, the transistor **260** is not activated, the transistor **262** is activated, current flows through the transistor **262**, and the current flowing into the power converter **94** on the lead **60** increases. Current does not flow through the transistor **260** because the transistor **260** is not activated. Current does not flow through the diodes **264**, **266** because the diodes **264**, **266** are reverse biased.

By the selective activation and deactivation of the transistors **260**, **262**, **296**, **298**, **300**, and **302**, the current signals I_{A*}, I_{B*}, I_{C*} are created on the leads **60**, **62**, **64**, respectively. So long as the voltage in the capacitor **96** is higher than the voltages in the utility **58** and in the generator **52**, current can be pushed out of the capacitor **96** in the desired phase and with the desired waveform. The real power generated by the generator **52** will be transferred to the capacitor **96** which will in turn transfer the real power to the utility **58** via the zero sequence currents I_{A0*}, I_{B0*}, I_{C0*}. Therefore, the real power generated by the generator **52** will be passed to the utility **58**. While at any instantaneous point in time, current may be flowing into or out of the capacitor **96**, the average current flowing into or out of the capacitor **96** will be zero if all of the generated power is delivered to the utility **58**. Therefore the average voltage level across the capacitor **96** will remain constant if all of the generated power is delivered to the utility **58**.

It is desirable to have the magnitude I_{F*} of the zero sequence current signals I_{A0*}, I_{B0*}, I_{C0*} be correctly adjusted so that all of the real power generated by the generator **52** is delivered to the utility **58**. This can be done by sensing the voltage across the capacitor **96** with the voltage sensor **322** which provides a voltage input signal that is directly proportional to the voltage across the capacitor **96** to the command current generator **66** on the lead **324**. Due to the law of the conservation of energy, if all of the real power generated by the generator **52** is not delivered to the utility **58**, the power must be transferred to the power converter **94**, which will increase of the voltage across the capacitor **96**. If the voltage across the capacitor **96** increases, the command current generator **66** will increase the magnitude V_F of the zero sequence voltage signals V_{A0}, V_{B0}, V_{C0} which will increase the magnitude I_{F*} of the zero sequence current signals I_{A0*}, I_{B0*}, I_{C0*} produced by the power converter **94** so that the real power stored in the capacitor **96** will be delivered to the utility **58**. Once the real power stored in the capacitor **96** is delivered to the utility **58**, the voltage level across the capacitor **96** will decrease, the command current generator **66** will decrease the magnitude V_F of the zero sequence voltage signals V_{A0}, V_{B0}, V_{C0} which will then decrease the magnitude I_{F*} of the zero sequence current signals I_{A0*}, I_{B0*}, I_{C0*} produced by the power converter **94**.

Now referring to FIGS. **2** and **10**, the output circuit **56** includes a zero sequence filter **293** and a transformer **294**. The zero sequence filter **293** comprises three identical inductors **280**, **282**, **284** connected to the generator system by the power taps and leads **61**, **63**, **65**, respectively. The inductors **280**, **282**, **284** are connected in a common node connection with the output lead **295** from the common node connected to the transformer **294**. Since the impedances **272**, **274**, **276** (see FIG. **9**) of the stator windings in the generator **52** are connected in a star configuration with no output lead, the zero sequence current signals I_{A0*}, I_{B0*}, I_{C0*} will flow only through the zero sequence filter **293** to the transformer **294**. As previously discussed, the positive sequence current signals I_{A+*}, I_{B+*}, I_{C+*} have a much higher frequency f_+ than the frequency f_0 of zero sequence current signals I_{A0*}, I_{B0*}, I_{C0*}. The frequency f_0 is sixty (60) hertz and the frequency f_+ can be, for example, between sixty (60) and 120 hertz. The inductors **280**, **282**, **284** in the zero sequence filter **293** choke the higher frequency positive sequence current signals I_{A+*}, I_{B+*}, I_{C+*} from passing through the zero sequence filter **293** to the transformer **294**, thereby acting as a bandpass or frequency filter for the zero sequence current signals I_{A0*}, I_{B0*}, I_{C0*} and as a high impedance block for the positive sequence current signals I_{A+*}, I_{B+*}, I_{C0+*} so that the positive sequence current signals I_{A+*}, I_{B+*}, I_{C+*} flow into the stator windings **272**, **274**, **276**.

If the frequency f_+ of the positive sequence current signals I_{A+*}, I_{B+*}, I_{C+*} is expected to be less than the frequency f_0 of the zero sequence current signals I_{A0*}, I_{B0*}, I_{C0*}, capacitors can be used instead of the inductors **280**, **282**, **284** to choke the lower frequency positive sequence current signals I_{A+*}, I_{B+*}, I_{C+*} from passing through the zero sequence filter **293** to the transformer **294**. The common node configuration of the inductors **280**, **282**, **284** also prevents the positive sequence current signals I_{A+*}, I_{B+*}, I_{C+*} from being transmitted to the transformer **294**.

The output from the zero sequence filter on the lead **295** is the input to the transformer **294**. The transformer **294** electrically isolates the generator system **50** from the utility **58** and provides the means for delivering the power generated by the generator system **50** to the utility **58**. As previously discussed, the power transferred to the utility **58** is single phase, sinusoidal with a frequency of sixty (60) hertz, and has a unity power factor. In addition, the power delivered to the utility **58** is synchronized to and in phase with the signals in the utility **58**. The use of a transformer to supply power to a utility is well known to people having ordinary skill in the art. For example, the 6H10000H Universal Isolation Transformer manufactured by Abbott Technologies, Inc., of Sun Valley, Calif. can be used as the transformer **294** in this invention.

It is apparent that numerous modifications and changes can be made to the invention described above. For example, either an induction generator or a synchronous generator can be used. Furthermore, a wound rotor or a squirrel cage rotor can be used to create and deliver the energy that charges the capacitor **96** without significantly changing the structure of the generator system **50** to allow the generate system **50** generate both positive sequence currents and zero sequence currents on the leads **60**, **62**, **64** to excite the stator windings **272**, **276**, **278** and to deliver the generated power to the utility **58** via the zero sequence filter **293**. More specifically, using a wound rotor requires that the wound rotor coils be connected to the capacitor **96** in such a way that the generated power charges the capacitor **96**. Regardless of the type of rotor used, the generator system disclosed above is usable with many different power sources for driving the rotor, including wind power, water or hydro power, geothermal power, etc.

It should also be apparent that instead of using a set of zero sequence currents to transfer the generated power to the utility **58**, only a single sixty (60) hertz signal generated by the excitation controller **54** on only one of the leads **60**, **62**, **64** is necessary to transfer the generated power to the utility **58**. The excitation controller **54** can adjust the frequency and phase of the single sixty (60) hertz signal to match the frequency and phase of the utility **58** and can increase or decrease the amplitude of the single sixty (60) hertz signal to correspondingly increase or decrease the amount of generated power that is delivered to the utility **58**.

The foregoing description is considered as illustrative only of the principles of the invention. Furthermore, since numerous modifications and changes will readily occur to those skilled in the art, it is not desired to limit the invention to the exact construction and process shown as described above. Accordingly, all suitable modifications and equivalents may be resorted to falling within the scope of the invention as defined by the claims which follow.

The embodiments of the invention in which an exclusive property or privilege is claimed are defined as follows:

1. Generator apparatus, comprising:

a variable speed rotor that is magnetically coupled to a plurality of electrically excited stator windings that are connected together at a common node;

filter means connected electrically to at least one of said stator windings for passing current that has a first characteristic and for blocking current that has a second characteristic;

a chargeable energy storage device connectable electrically, but not through said filter, to said stator windings;

switch means positioned between said energy storage device and said stator windings for connecting and disconnecting said energy storage device to and from said stator windings; and

load connection means for making an electrical connection of a load through said filter means to at least one of said stator windings, said electrical connection of the load to at least one of said stator windings being positioned between said stator winding and said switch means.

2. The apparatus of claim **1**, wherein said filter is a zero sequence filter.

3. The apparatus of claim **2**, including a transformer connected between said zero sequence filter and said load.

4. The apparatus of claim **2**, wherein said zero sequence filter includes a plurality of inductive elements.

5. The apparatus of claim **4**, wherein each of said plurality of inductive elements is connected to one of said stator windings and each of said stator windings is connected to at least one of said plurality of inductive elements.

6. The apparatus of claim **5**, wherein said stator windings consists of three stator windings.

7. The apparatus of claim **6**, wherein said plurality of inductive elements consists of three inductive elements.

8. The apparatus of claim **2**, wherein said zero sequence filter includes a plurality of capacitive elements.

9. The apparatus of claim **8**, wherein each of said plurality of capacitive elements is connected to one of stator windings and each of said stator windings is connected to at least one of said plurality of capacitive elements.

10. The apparatus of claim **9**, wherein said stator windings consists of three stator windings.

11. The apparatus of claim **10**, wherein said plurality of capacitive elements consists of three capacitive elements.

12. The apparatus of claim **1**, wherein said energy storage device includes a capacitor.

13. The apparatus of claim **1**, including an electric energy source connectable to said energy storage device, said electric energy source being capable of charging said energy storage device when said electric energy source is connected to said energy storage device.

14. The apparatus of claim **1**, including actuator control means for actuating said switch means to connect and disconnect said energy storage device and said stator windings in a manner that creates electric excitation signals having a first characteristic that is not passable through said filter and electric power signals having a second characteristic that is passable through said filter.

15. The apparatus of claim **14**, wherein said actuator control means includes energy sensing means connected to said energy storage device for sensing energy level stored in said energy storage device and actuating said switch means to produce said electric power signals when the energy level of said energy storage device is above a target energy level.

16. The apparatus of claim **14**, wherein said actuator control means includes angular velocity sensing means for measuring angular velocity of said rotor and actuating said switch means that produces electric excitation signals having a frequency that maximizes the production of electric energy.

17. A method of producing and delivering electrical energy to a load, comprising the steps of:

generating electrical energy with a variable angular velocity rotating rotor that is magnetically coupled to a plurality of stator windings;

storing said electrical energy;

tapping the electrical energy stored to create electric excitation signals having a first characteristic on a plurality of conductors that are connected respectively to said stator windings;

tapping the electrical energy stored to create electric power signals having a second characteristic distinct from said first characteristic on at least one of said conductors; and

connecting the load electrically to the conductor or conductors that has or have said electric power signals via a filter that passes said electric power signals and blocks said electric excitation signals.

18. The method of claim **17**, including the step of creating said electric excitation signals to have the first characteristic of being in positive sequence.

19. The method of claim **18**, including the step of creating said electrical excitation signals with a frequency that is adjustable within an excitation frequency range.

20. The method of claim **19**, including the step of adjusting the frequency of the excitation signals within the excitation range to maximize the electrical energy generated for an angular velocity at which the rotor is rotating.

21. The method of claim **20**, including the steps of measuring angular velocity of the rotating rotor, determining an optimum frequency for the excitation signals that will cause the rotating rotor interacting with the stator windings to generate maximum electrical energy at the angular velocity measured, and adjusting the frequency of the excitation signals to that optimum frequency.

22. The method of claim **21**, including the steps of determining empirically a gamut of optimum frequencies in said excitation frequency range that will cause the rotating rotor interacting with the stator windings to generate maximum electrical energy at a variety of angular velocities, and selecting the optimum frequency from the gamut that corresponds to the angular velocity measured.

23. The method of claim **17**, including the steps of establishing a target level for the stored energy that is sufficient to provide the electric excitation signals necessary to interact with the rotating rotor to generate the electrical energy and maintaining the electrical energy stored at the target level.

24. The method of claim **23**, including the steps of measuring the electrical energy stored and adjusting the electric power signals to deliver excess electrical energy over the target level to the load.

25. The method of claim **24**, including the steps of creating said electric excitation signals to have the first characteristics of being in positive sequence and with a frequency that is adjustable within an excitation frequency range, and creating said electric power signals to have the second characteristic include a frequency that is not in said excitation frequency range.

26. The method of claim **25**, including the step of creating said electric power signals on more than one of said conductors to have the second characteristic also include said electric power signals being in phase with each other.

27. The method of claim **26**, including the step of creating said electric power signals to have the second characteristic also include said electric power signals having the same magnitude on each of the conductors that has electric power signals.

28. The method of claim **27**, including the steps of connecting said stator windings in a star configuration and providing said filter to have a higher impedance in said excitation frequency range than at the frequency of the electric power signal.

29. The method of claim **27**, including the step of providing said filter to have a higher impedance in said excitation frequency range than impedances in the stator windings.

30. The method of claim **28**, including the steps of connecting the load to the conductors that have electric power signals at a node that is common to the conductors and positioning an impedance producing device between each of the conductors and the node.

31. The method of claim **30**, including the step of using an inductor for the impedance producing device between each of the conductors and the node.

32. The method of claim **30**, including the step of using a capacitor for the impedance producing device between each of the conductors and the node.

* * * * *