US005747099A

United States Patent [19]

Blaugher

[11] **Patent Number: 5,747,099**

[45] **Date of Patent: May 5, 1998**

[54] **TWO CHAMBER REACTION FURNACE**

[75] Inventor: **Richard D. Blaugher**, Evergreen, Colo.

[73] Assignee: **Midwest Research Institute**, Kansas City, Mo.

[21] Appl. No.: **583,341**

[22] Filed: **Jan. 5, 1996**

[51] **Int. Cl.**[6] **B05D 5/12**; C23C 16/00

[52] **U.S. Cl.** **427/62**; 427/248.1; 427/585; 427/593; 505/783; 118/719; 118/729

[58] **Field of Search** ..... 427/248.1, 255.3, 427/255.5, 585, 587, 591–593, 62, 126.3; 505/783; 118/719, 723 V, 729

[56] **References Cited**

U.S. PATENT DOCUMENTS

4,395,440	7/1983	Abe et al.	427/255.3
4,536,419	8/1985	Kubota et al.	427/255.5
4,942,152	7/1990	Itozaki et al. .	
5,034,372	7/1991	Matsuno et al.	427/62
5,175,140	12/1992	Fujita et al.	505/783
5,276,010	1/1994	Sasaki	427/62
5,314,867	5/1994	Hermann et al.	427/62
5,360,646	11/1994	Morita	427/255.3
5,403,819	4/1995	Makamura	505/473
5,480,861	1/1996	Tanaka et al.	427/62

Primary Examiner—Shrive Beck
Assistant Examiner—Brian K. Talbot
Attorney, Agent, or Firm—Edna M. O'Connor; Ken Richardson

[57] **ABSTRACT**

A vertical two chamber reaction furnace. The furnace comprises a lower chamber having an independently operable first heating means for heating the lower chamber and a gas inlet means for admitting a gas to create an ambient atmosphere, and an upper chamber disposed above the lower chamber and having an independently operable second heating means for heating the upper chamber. Disposed between the lower chamber and the upper chamber is a vapor permeable diffusion partition. The upper chamber has a conveyor means for conveying a reactant there through. Of particular importance is the thallinating of long-length thallium-barium-calcium-copper oxide (TBCCO) or barium-calcium-copper oxide (BCCO) precursor tapes or wires conveyed through the upper chamber to thereby effectuate the deposition of vaporized thallium (being so vaporized as the first reactant in the lower chamber at a temperature between about 700° and 800° C.) on TBCCO or BCCO tape or wire (the second reactant) at its simultaneous annealing temperature in the upper chamber of about 800° to 950° C. to thereby replace thallium oxide lost from TBCCO tape or wire because of the high annealing temperature or to deposit thallium on BCCO tape or wire. Continuously moving the tape or wire provides a single-step process that effectuates production of long-length TBCCO superconducting product.

10 Claims, 2 Drawing Sheets

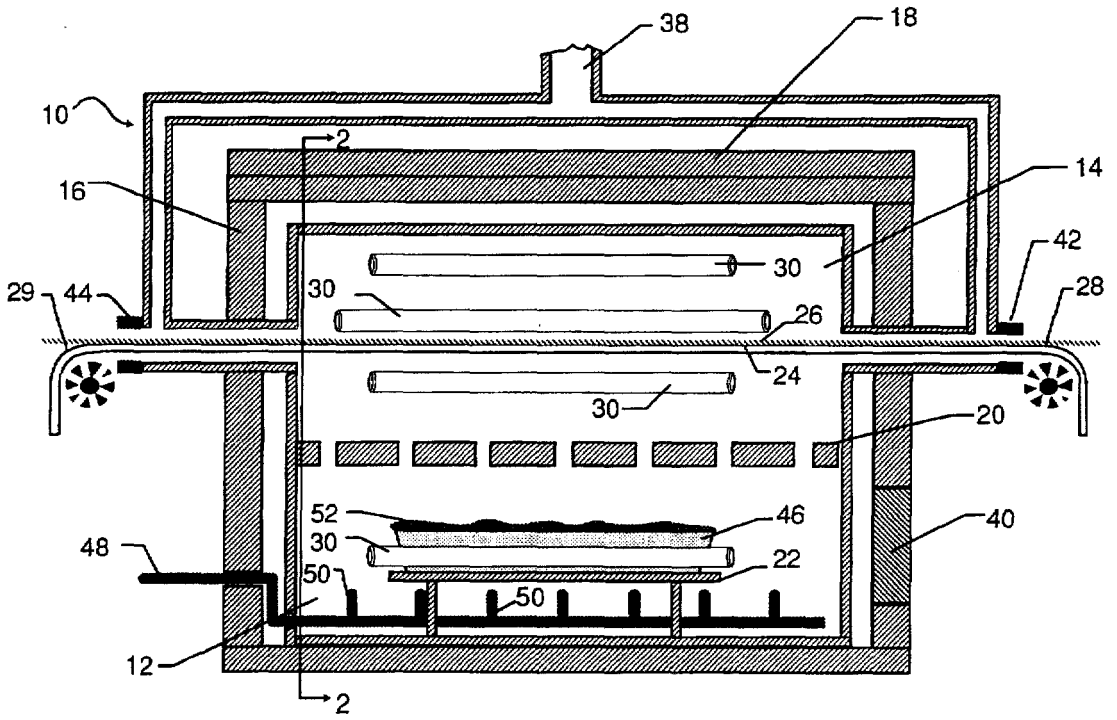

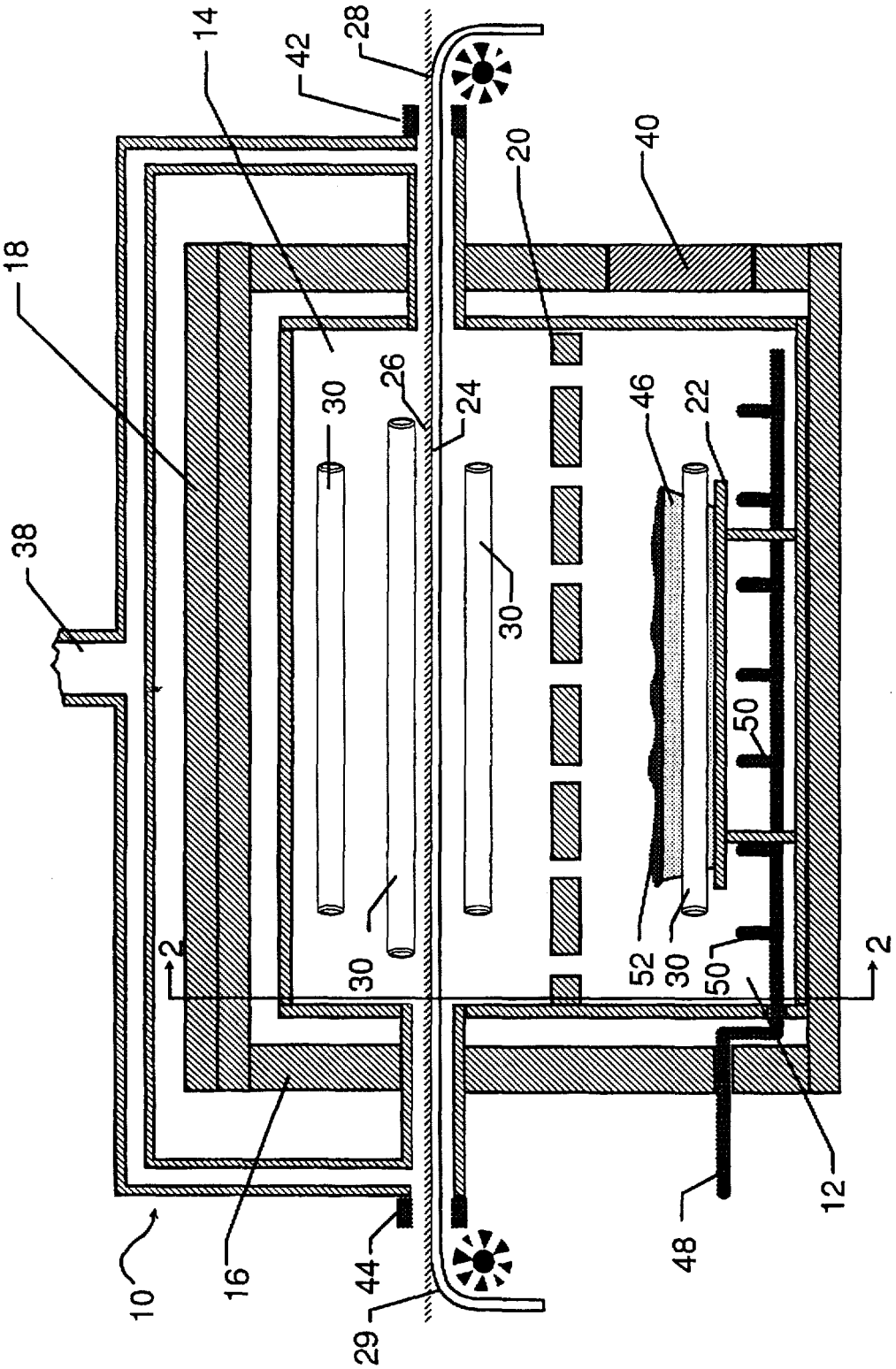

Figure 1

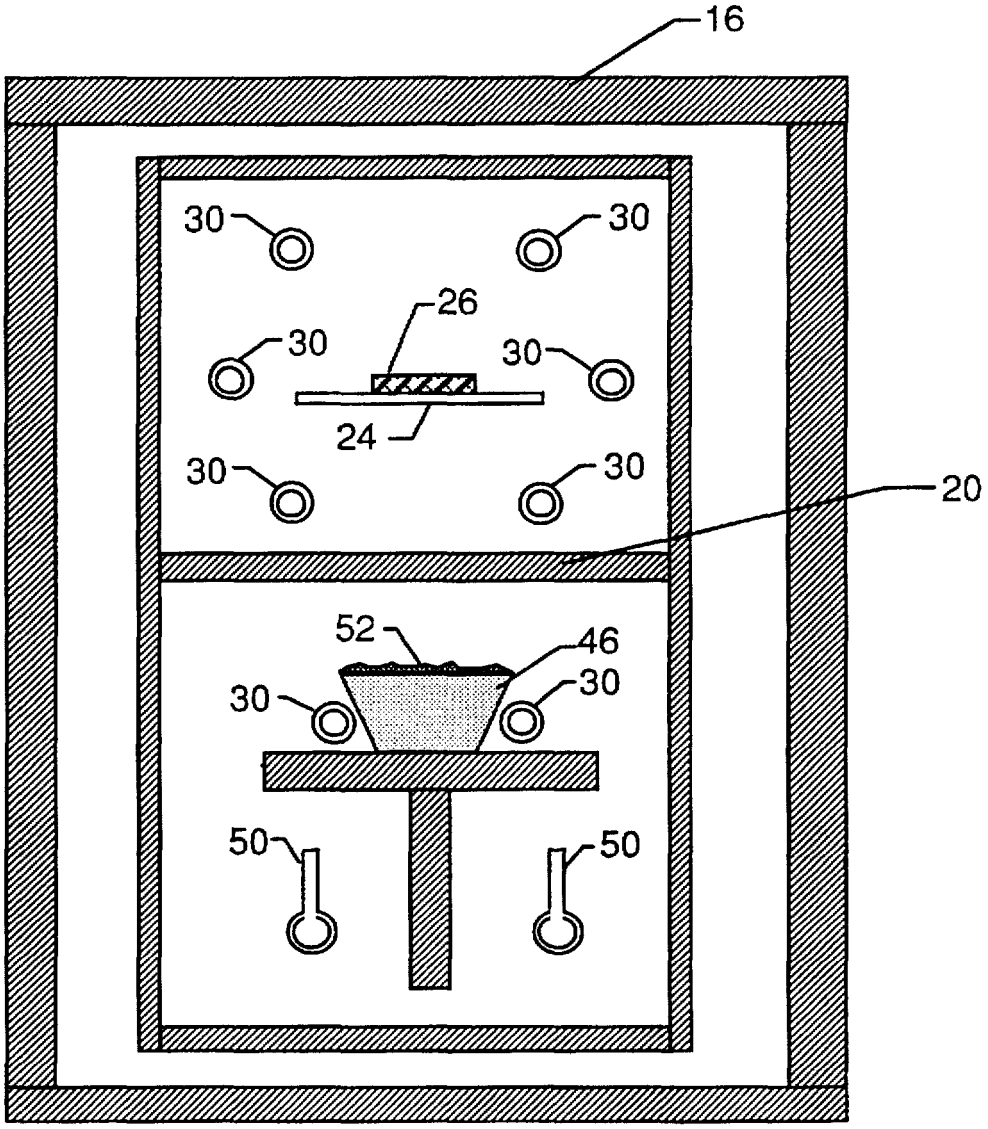

Figure 2

TWO CHAMBER REACTION FURNACE

BACKGROUND OF THE INVENTION

The United States Government has rights in this invention under Contract No. DE AC36-83CH10093 between the United States Department of Energy and the National Renewable Energy Laboratory, a division of the Midwest Research Institute.

BACKGROUND OF THE INVENTION

I. Field of the Invention

The present invention relates in general to a furnace in which chemical or physical reactions occur, and in particular to a two chamber reaction furnace wherein the chambers are disposed substantially vertically in relation to each other and the temperature of each chamber thereof can be individually controlled, with the chambers being separated from each other by a vapor-permeable partition to thereby permit interaction between reactants situated in different chambers. Also included is methodology for the interaction of reactants.

II. Description of the Prior Art

In certain chemical and physical reactions between one or more reactants, it is not unusual for reactants to require two or more different temperatures, all above ambient, for steps of a reaction to proceed. When this is the case, current single-chamber, and therefore single-temperature, furnaces require multi-step procedures to accomplish complete reactions. Such multi-step procedures can include heating a first reactant at a given temperature for an appropriate time period in a furnace, and thereafter either increasing or decreasing the furnace temperature before adding a second reactant to the furnace for a second period of time. As is apparent, such a multi-step process is both inconvenient, time-consuming, and energy inefficient while additionally requiring invasion of the furnace chamber when reactants are incompletely reacted.

Current two-zone furnaces having a first temperature zone and a second temperature zone in horizontal relationship to each other permit vaporization of a material in one zone and vapor travel to the second zone for subsequent deposition thereof. However, one major drawback of horizontal zones is that vapor deposition is not uniform, but instead a gradient of deposition quantity occurs as the vapor travels horizontally through the second temperature zone.

Exemplification of a process wherein reactants thereof require different activation temperatures in order to yield the required end product is found in the manufacture of thallium-barium-calcium-copper oxide (TBCCO) substrates having superconducting properties. In particular, a TBCCO substrate is first annealed at temperatures of about 800° to 900° C., at which temperature thallium is highly volatile and can be lost from the substrate. Accordingly, an external source of thallium is usually needed to compensate for any thallium loss. In a single-chamber, fixed temperature furnace, this external source is usually vaporized thallium derived from a thallium source identical to the composition of the end-product to be produced. The thallium source is heated to a temperature between about 700° and 800° C., thus about 100° less than the annealing temperature. In a single-chamber furnace, the initial TBCCO reactant is therefore annealed first at the higher temperature. Thereafter, at the lower temperature, the initial TBCCO reactant is exposed to thallium vapor which is normally combined with an oxygen background pressure and flow. Simultaneous

annealing and thallium replacement thus cannot occur in a single-chamber furnace to produce the final TBCCO substrate end-product. Employment of a two-zone horizontal furnace permits simultaneous vaporization and deposition, but, as earlier noted, creates a deposition gradient and resultant non-uniformity of desired end-product.

In view of the above, it is evident that a need is present for a two-chamber furnace where reactants therein can simultaneously react uniformly to completion when different temperature values are required for respective reactants. Therefore, a primary object of the present invention is to provide a two-chamber reaction furnace wherein the chambers are situated substantially vertically in relation to each other and wherein the temperature of each chamber can be individually controlled.

Another object of the present invention is to provide a vertical two chamber furnace wherein the chambers are separated from each other by a vapor-permeable partition to thereby permit interaction between reactants situated in different chambers and at different temperatures.

Yet another object of the present invention is to provide methodology for producing a product wherein a first reactant thereof requires a first temperature while a second reactant thereof whose vapor is to be deposited on the first reactant is so vaporized simultaneously at a second temperature.

These and other objects of the present invention will become apparent throughout the description of the invention which now follows.

SUMMARY OF THE INVENTION

The present invention is a vertical two chamber reaction furnace. The furnace comprises a lower chamber having an independently operable first heating means for heating the lower chamber and a gas inlet means for admitting a gas to create an ambient atmosphere, and an upper chamber disposed above the lower chamber and having an independently operable second heating means for heating the upper chamber. Disposed between the lower chamber and the upper chamber is a vapor permeable diffusion partition. In a preferred embodiment each chamber has a respective support means for supporting a respective reactant situatable thereon. Additionally, the upper chamber can have a conveyor means for conveying a reactant from a first location outside of the furnace through the upper chamber of the furnace to a second location outside of the furnace.

The present invention additionally comprises a process for depositing a vaporizable first reactant on a second reactant wherein the vaporizable first reactant volatilizes at a first temperature and deposition of that first reactant on the second reactant occurs simultaneously at a second temperature. The process comprises providing a vertical two chamber furnace as defined above and placing a vaporizable first reactant within the lower chamber and placing a second reactant within the upper chamber. The lower chamber is heated to a temperature sufficient to vaporize the vaporizable reactant within the lower chamber while admitting oxygen and/or an inert gas as required to effectuate such vaporization, with vapor thereof passing through the partition into the upper chamber. The upper chamber is heated to a temperature sufficient to react the second reactant while the vaporized reactant passes through the partition and is deposited simultaneously on the second reactant within the upper chamber. Of particular importance is the thallinating of long-length TBCCO precursor tapes or wires, which can be thallium-free (e.g. barium-calcium-copper oxide [BCCO]) or can contain thallium (e.g. TBCCO), conveyed through the

upper chamber via the conveyor means to thereby effectuate the deposition of vaporized thallium (being so vaporized as the first reactant in the lower chamber at a temperature between about 700° and 800° C.) on TBCCO tape or wire (the second reactant) at its simultaneous annealing temperature in the upper chamber of about 800° to 950° C. to thereby replace thallium oxide lost from the initial second reactant because of the high annealing temperature. Compounds of other metals, such as the substitution of Sr, Pb and Bi for the Tl, Ba and Ca of TBCCO for example, can, of course, change the reaction temperature. In the substitution example given, the reaction temperature is higher. The tape or wire is continuously moved by the conveyor means to yield a single-step process that effectuates production of long-length TBCCO superconducting product.

BRIEF DESCRIPTION OF THE DRAWINGS

An illustrative and presently preferred embodiment of the invention is shown in the accompanying drawings in which:

FIG. 1 is a front elevation view schematically in section of a two chamber furnace; and

FIG. 2 is an end elevation view along line 2—2 of FIG. 1.

DETAILED DESCRIPTION OF THE PREFERRED EMBODIMENT

Referring to FIGS. 1 and 2, a furnace **10** is shown schematically. The furnace **10** has a lower chamber **12** and an upper chamber **14**, with the upper chamber **14** disposed above the lower chamber **12**. The wall **16** of the furnace **10** is constructed of tubular stainless steel and is openable at its top **18**. Disposed between the two chambers **12**, **14** is a vapor permeable partition **20** here constructed of baffles which function to admit vapor from a reactant in the lower chamber **12** to pass into the upper chamber **14**. A typical exhaust stack **38** is provided.

Disposed within the lower chamber **12** is a fixed platform **22** which functions as a first support means upon which a first reactant can be situated. A gas inlet **48** enters the lower chamber **12**, and has a plurality of dispersion nozzles **50** therein to permit entry of a gas as desired to create a specific ambient atmosphere depending upon the requirements of the reactant(s) there present. Access to the lower chamber **12** can be accomplished through an access port **40** located in alignment with the platform **22**. Disposed within the upper chamber **14** is a second support means which can be a fixed platform or, as here shown, a conveyor means including a conveyor belt **24** for conveying a second reactant such as a length of tape **26** from a first location **28** outside of the furnace **10** through the upper chamber **14** to a second location **29** outside of the furnace **10**. Access to the upper chamber **14** for both the conveyor belt **24** and the second reactant thereon is through respective baffles **42**, **44** having respective gas blankets and situated through duct components of the exhaust stack **38**. Movement of the conveyor belt **24** is accomplished by conventional means such as a motor powered by electricity. Respective ceramic heating elements **30**, here being "Globar" elements manufactured by Cesiwid Company, Niagara Falls, N.Y., are disposed near both the first and second support means to thereby provide respective isothermal reaction regions within which the reactants reside during reaction events. These Globar elements can be sheathed with aluminum oxide to minimize any degradation thereof which may occur in a corrosive environment.

Operation of the furnace **10** is exemplified in the preparation of a continuous length of TBCCO tape, as described below.

Example

The respective heating elements **30** in both the lower chamber **12** and upper chamber **14** of the furnace **10** were activated to heat the lower chamber **12** to a temperature of between about 700° and 800° C. and to heat the upper chamber **14** to a temperature between about 800° and 950° C. An alumina boat **46** housing thallium oxide **52** was placed within the lower chamber **12** on the platform **22** within the isothermal reaction region, and oxygen gas was admitted through the gas inlet **48** and dispersion nozzles **50** to thereby provide partial pressure control for the thallium and oxygen within the lower chamber **12**. A length of TBCCO or BCCO tape **26** was placed on the conveyor belt **24** at a first location **28** and was thereafter conveyed into (and subsequently through) the isothermal reaction region of the upper chamber **14**. The TBCCO or BCCO tape **26** was annealed in the upper chamber **14** at the set temperature of 800° to 900° C., with a portion of the thallium of the tape **26** being lost therefrom because of the high annealing temperature. Simultaneously, the thallium oxide **52** within the alumina boat **46** situated in the lower chamber **12** was vaporizing, and the vapor therefrom passed through the vapor permeable partition **20** into the upper chamber **14** to effectively replace or maintain the initial thallium lost from the TBCCO tape or to incorporate thallium on the BCCO tape and thereby produce a TBCCO tape having the required thallium value for efficacy. After a reaction time of one to **60** minutes, depending on the film thickness desired, the segment of tape **26** so reacted passes onward to a final destination outside the furnace **10** at the second location **29**. In this manner an operator can effectuate the thallinating of long-length precursor tape or wire to produce a uniform superconducting product quickly and efficiently because of annealing of precursor tape or wire and simultaneous thallium deposition thereon accomplishable in the vertical two chamber furnace **10**.

While an illustrative and presently preferred embodiment of the invention has been described in detail herein, it is to be understood that the inventive concepts may be otherwise variously embodied and employed and that the appended claims are intended to be construed to include such variations except insofar as limited by the prior art.

I claim:

1. A process for simultaneously replacing a vaporizable reactant that has been lost from a length of reactant during annealing in a reaction furnace wherein a vaporizable first reactant volatilizes at a first temperature and simultaneously replaces loss reactant of a length of a second reactant at a second temperature, comprising:

a) providing a substantially vertical two chamber reaction furnace comprising a lower chamber having an independently operable first heating means for heating the lower chamber and a gas inlet means for admitting a gas to create an ambient atmosphere, an upper chamber having an independently operable second heating means for heating the upper chamber, and a vapor permeable diffusion partition disposed between the lower chamber and the upper chamber, said upper chamber disposed above the lower chamber;

b) placing a vaporizable first reactant within the lower chamber;

c) placing a length of second reluctant within the upper chamber;

d) heating the lower chamber to a temperature of from about 700° C. to about 800° C. sufficient to vaporize the vaporizable first reactant within the lower chamber

while admitting a gas through the gas inlet means to effectuate vaporization with vapor thereof passing through the partition into the upper chamber; and

e) simultaneously heating the upper chamber to a temperature of from about 800° C. to about 950° C. to anneal the length of said second reactant and cause a loss of a portion of the second reactant while simultaneously vaporizing the reactant of (d) on the length of the annealed second reactant to replace said portion of loss second reactant within the upper chamber.

2. A process as claimed in claim **1** wherein a first support means is disposed within the lower chamber and the vaporizable reactant is situated thereon.

3. A process as claimed in claim **1** wherein a second support means is disposed within the upper chamber and the length of said annealed second reactant is situated thereon.

4. A process as claimed in claim **2** wherein a second support means is disposed within the upper chamber and the length of said annealed second reactant is situated thereon.

5. A process as claimed in claim **3** wherein the second support means comprises conveyor means for conveying the length of second reactant from a first location outside of the furnace through the upper chamber of the furnace to a second location outside of the furnace.

6. A process as claimed in claim **4** wherein the second support means comprises a conveyor means for conveying the length of second reactant from a first location outside of the furnace through the upper chamber of the furnace to a second location outside of the furnace.

7. A process as claimed in claim **6** wherein the vaporizable first reactant is Tl_2O_3 and the length of second reactant is thallium-barium-calcium-copper oxide.

8. A process as claimed in claim **7** wherein oxygen gas is admitted into said lower chamber heated to a temperature of from about 700° C. to about 800° C.

9. A process as claimed in claim **6** wherein the vaporizable reactant is Tl_2O_3 and the substrate is barium-calcium-copper oxide.

10. A process as claimed in claim **9** wherein oxygen gas is admitted into said lower chamber heated to a temperature of from about 700° C. to about 800° C.

* * * * *