US005599229A

United States Patent [19]

Claunch et al.

[11] **Patent Number: 5,599,229**

[45] **Date of Patent: Feb. 4, 1997**

[54] **ENHANCEMENT OF WALL JET TRANSPORT PROPERTIES**

[75] Inventors: **Scott D. Claunch**, Broomfield; **Robert B. Farrington**, Golden, both of Colo.

[73] Assignee: **Midwest Research Institute**, Kansas City, Mo.

[21] Appl. No.: **436,144**

[22] Filed: **May 8, 1995**

[51] **Int. Cl.**[6] **B60S 1/54**

[52] **U.S. Cl.** **454/121**; 34/492; 34/632; 454/127

[58] **Field of Search** 34/492, 632; 454/85, 454/93, 121, 125, 127, 198

[56] **References Cited**

U.S. PATENT DOCUMENTS

681,215	8/1901	Goll .	
2,212,468	8/1940	Ferris .	
2,972,358	2/1961	Hinden	138/39
3,242,846	3/1966	Bunn .	
3,346,932	10/1967	Cheape, Jr.	34/632 X
3,624,806	11/1971	Lytzen	34/624 X
3,777,651	12/1973	Hansen .	
3,815,485	6/1974	Beusink et al. .	
3,832,939	9/1974	Kakei et al.	454/125
3,927,827	12/1975	Strindehag .	
4,055,003	10/1977	Sack	34/632
4,413,550	11/1983	Piano .	
4,823,681	4/1989	Gore .	
4,875,624	10/1989	Hara et al.	236/49.5
4,941,398	7/1990	Morris et al.	454/125 X
5,338,254	8/1994	Farrington	454/284

OTHER PUBLICATIONS

Conveney D. et al., *Papermaking and Paperboard Making*, 2nd., 3:405–551, pp. 414–484 (1970).

Primary Examiner—Harold Joyce
Attorney, Agent, or Firm—Edna M. O'Connor

[57] **ABSTRACT**

By enhancing the natural instabilities in the boundary layer and in the free shear layer of a wall jet, the boundary is minimized thereby increasing the transport of heat and mass. Enhancing the natural instabilities is accomplished by pulsing the flow of air that creates the wall jet. Such pulsing of the flow of air can be accomplished by sequentially occluding and opening a duct that confines and directs the flow of air, such as by rotating a disk on an axis transverse to the flow of air in the duct.

20 Claims, 15 Drawing Sheets

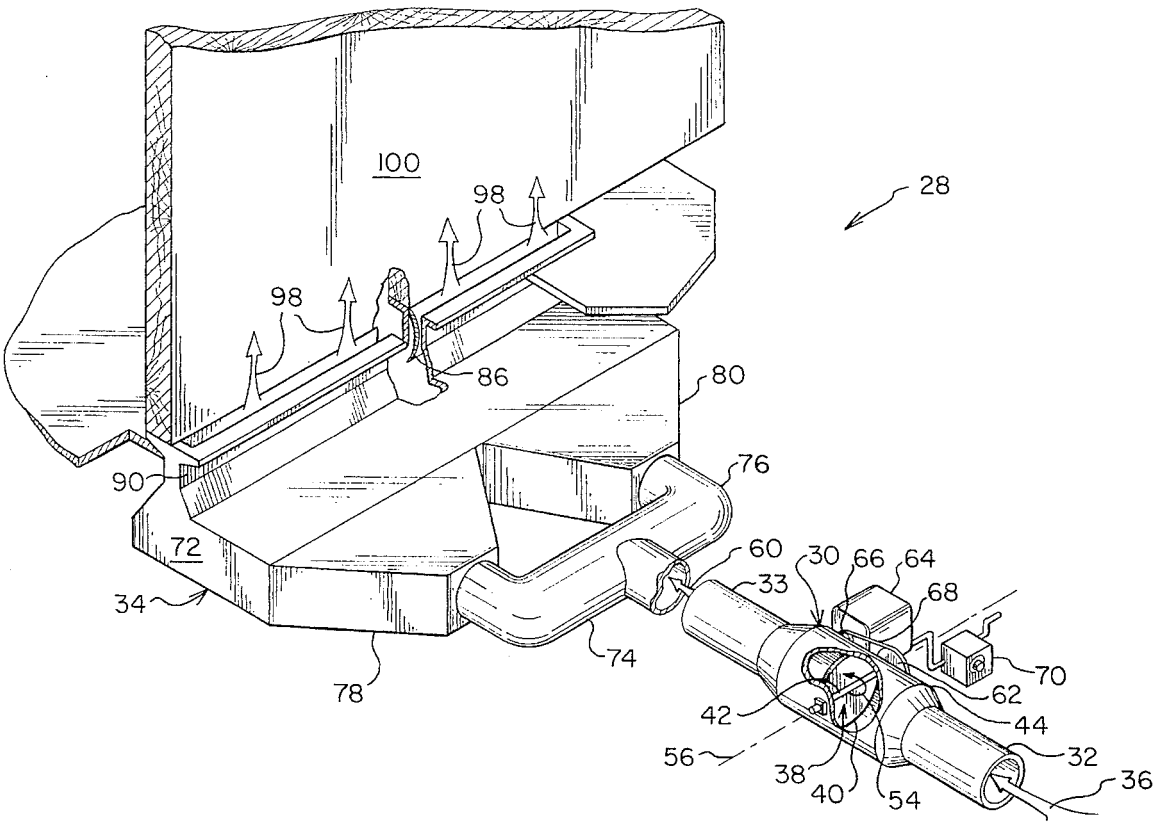

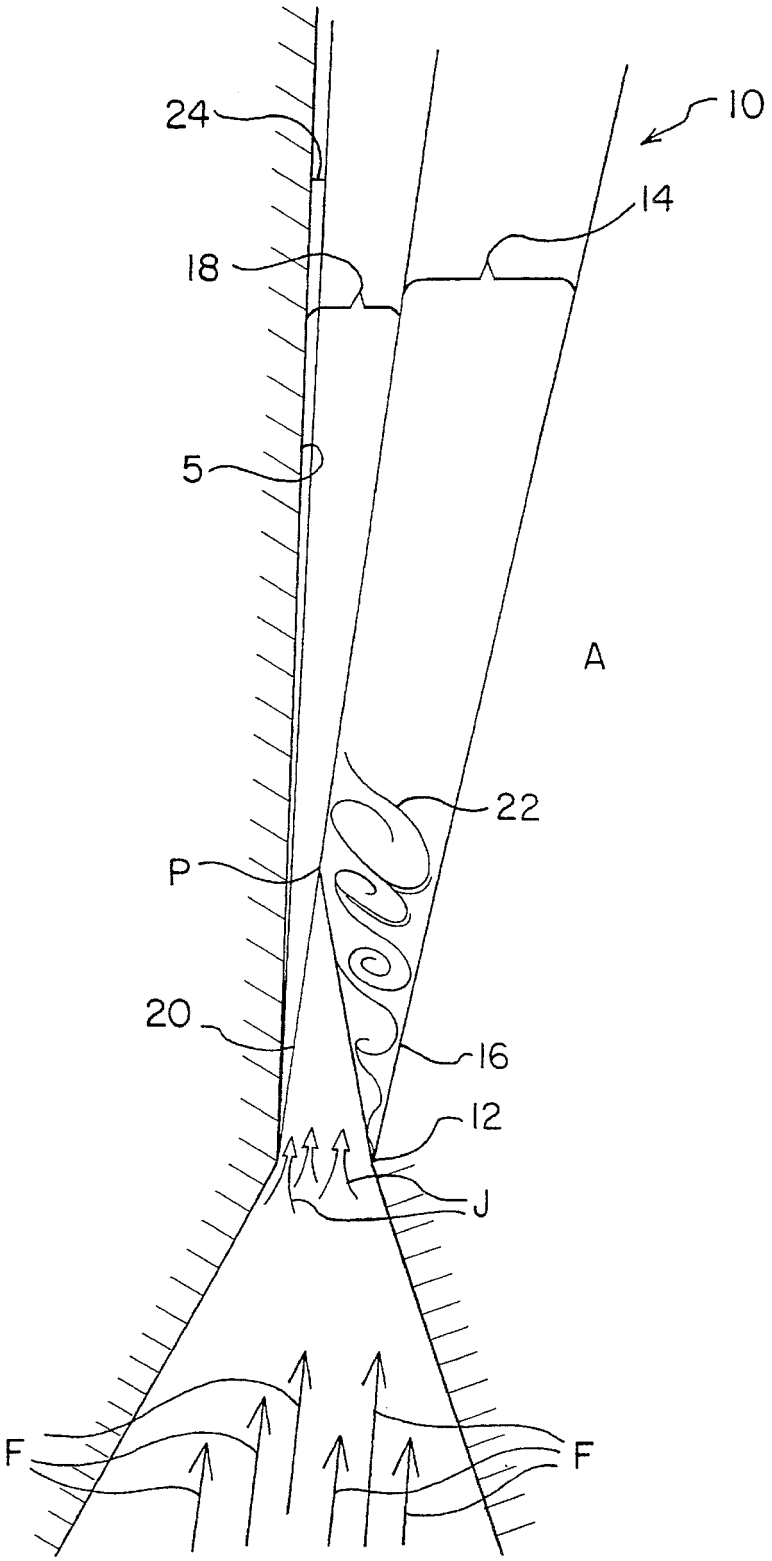

FIG. 1
(PRIOR ART)

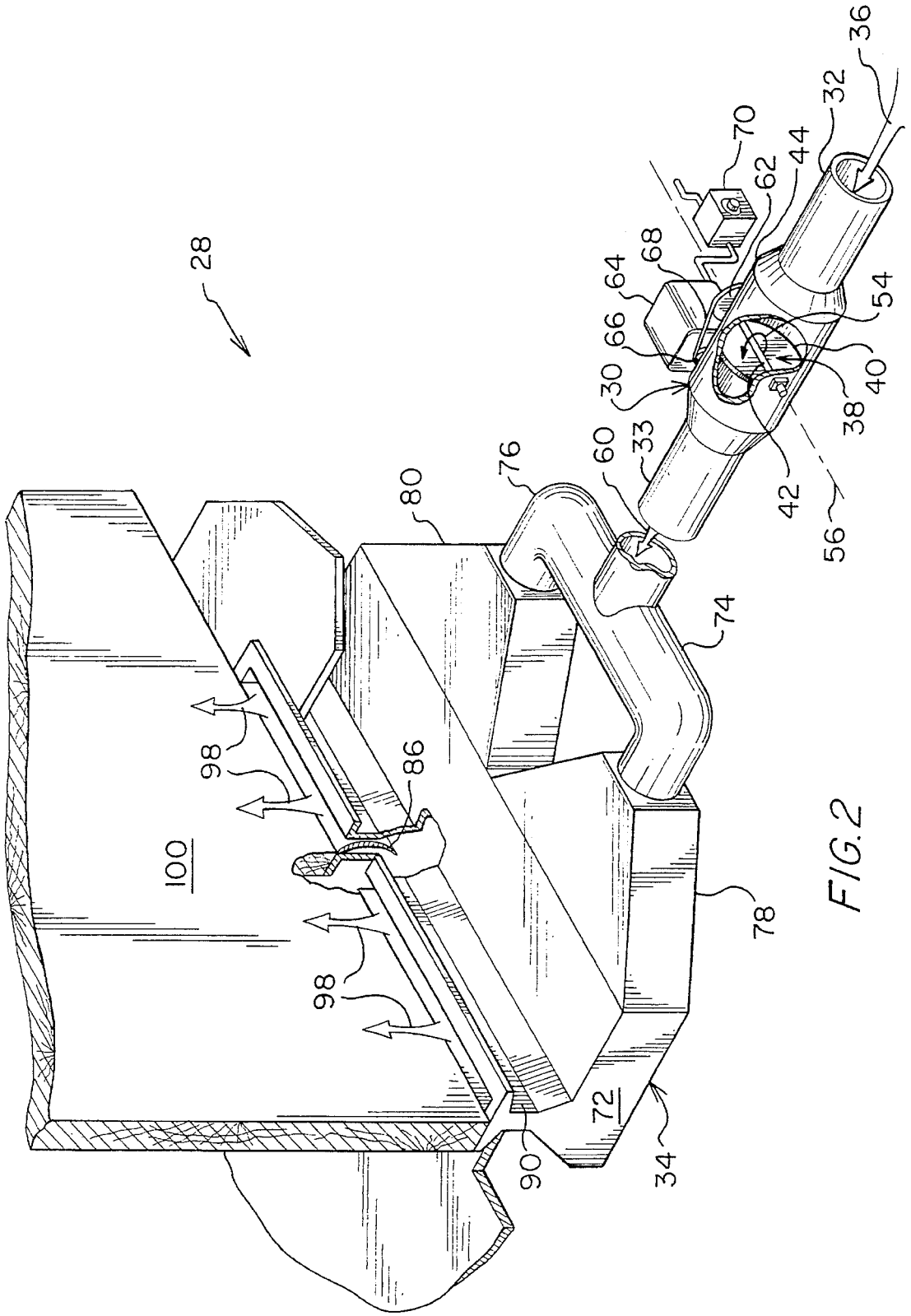
28
36
32
70
44
62
68
64
66
54
30
40
38
33
60
76
80
42
56
74
98
86
100
98
78
72
90
34

FIG. 2

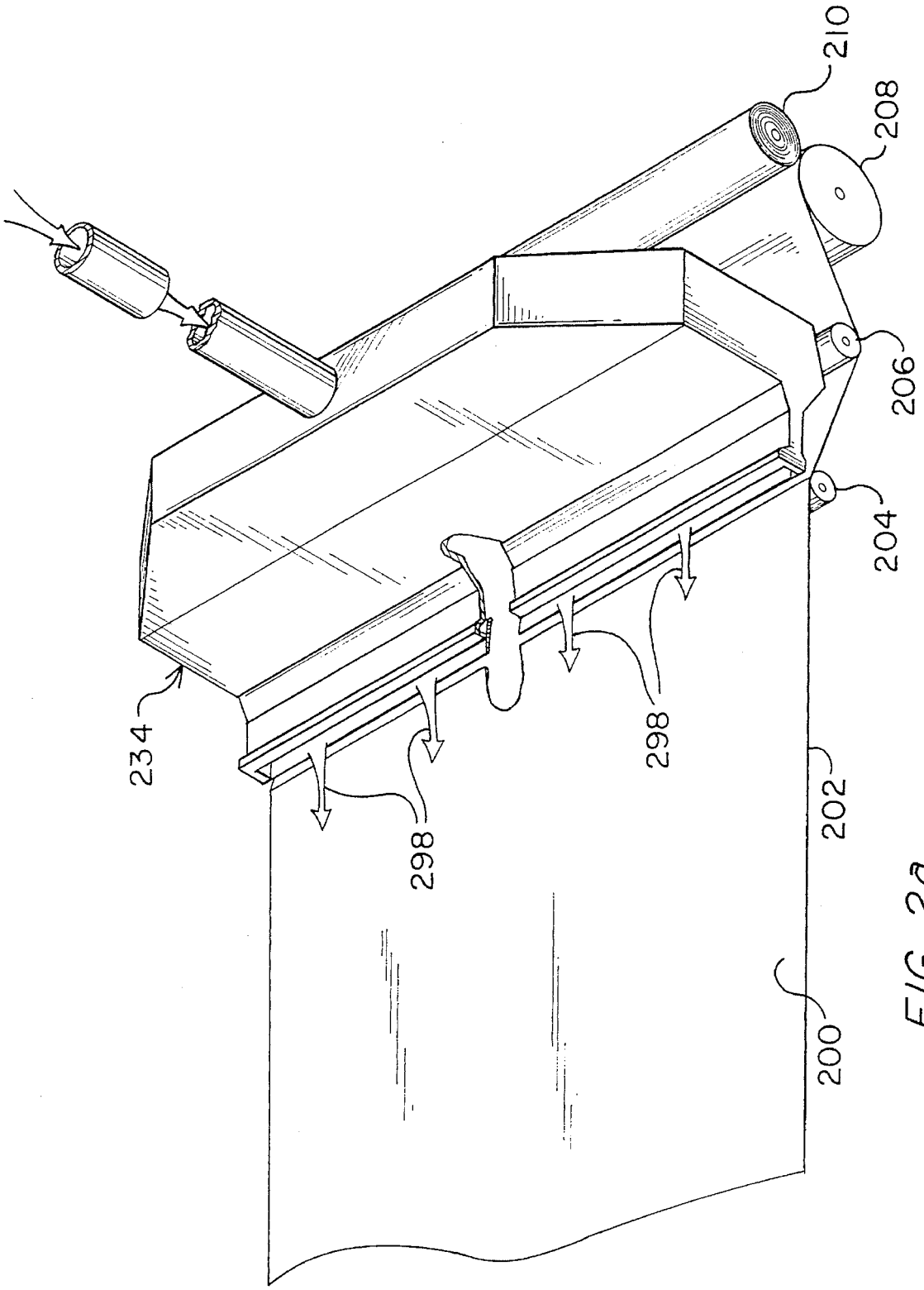

FIG. 2a

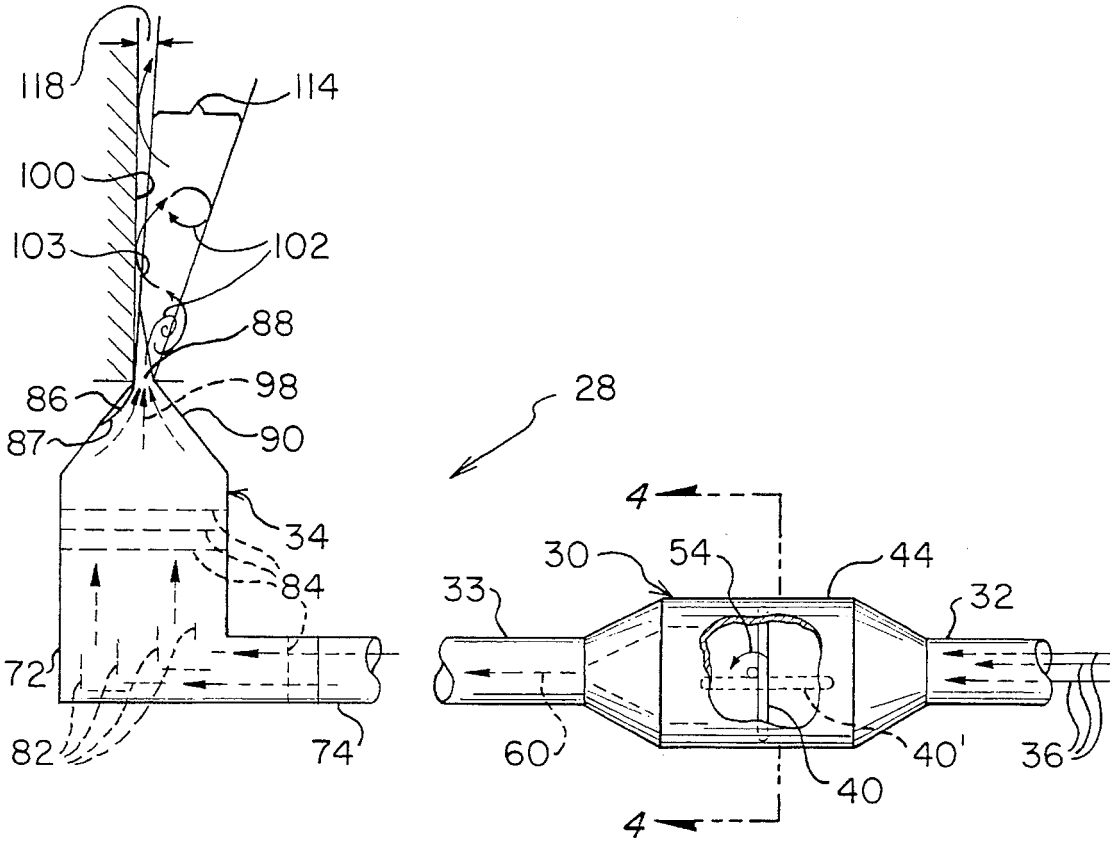
118
114
100
103
102
88
86
98
87
90
28
34
84
72
82
74
4
30
54
44
33
32
60
40'
36
40
4

FIG. 3

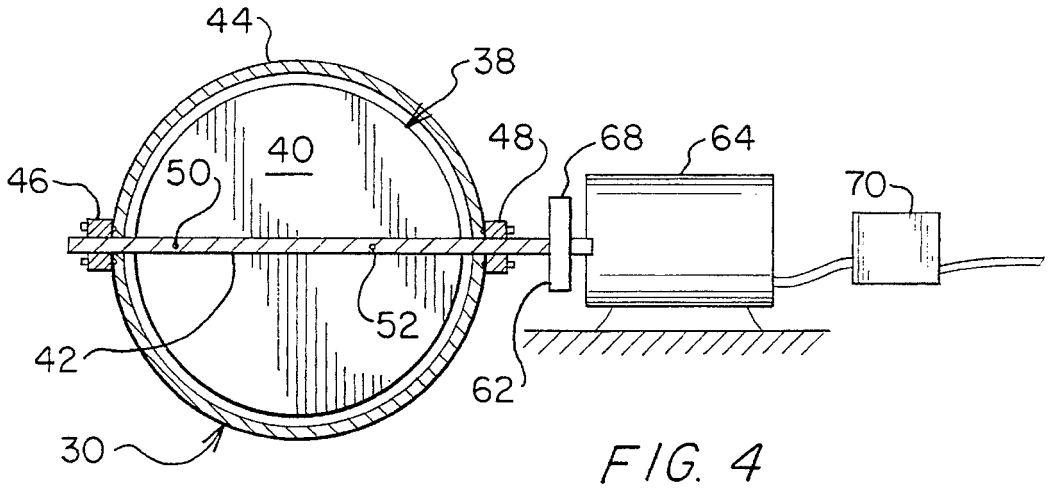
44
38
40
48
68
64
46
50
70
52
42
62
30

FIG. 4

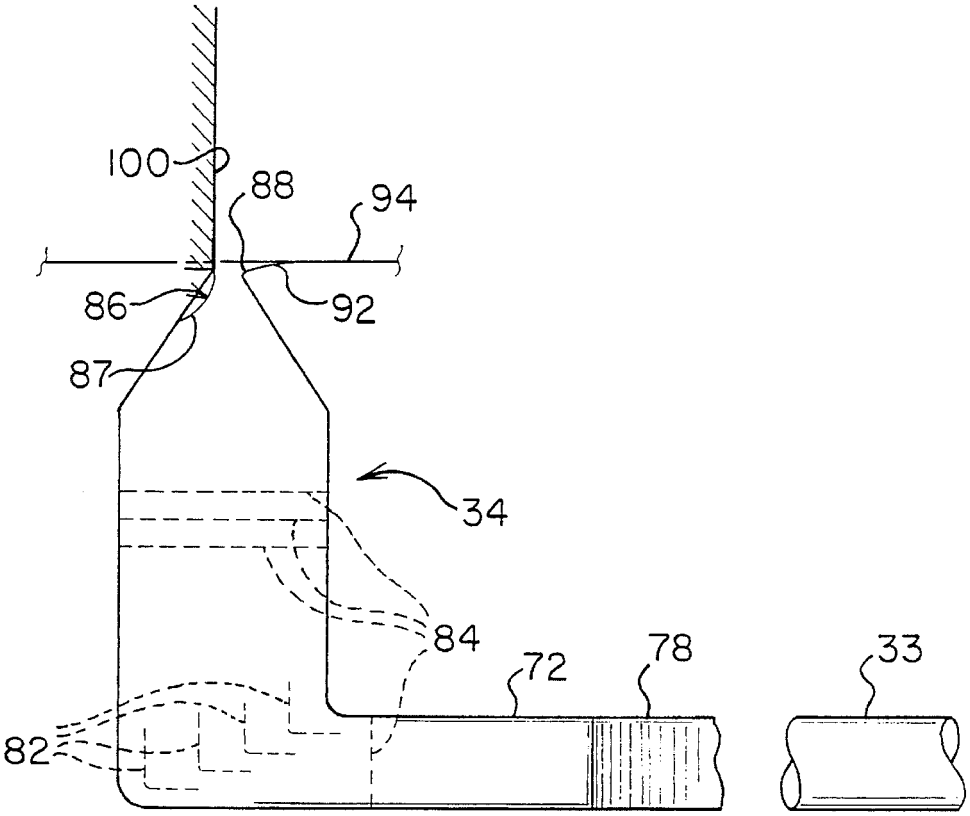

FIG. 5

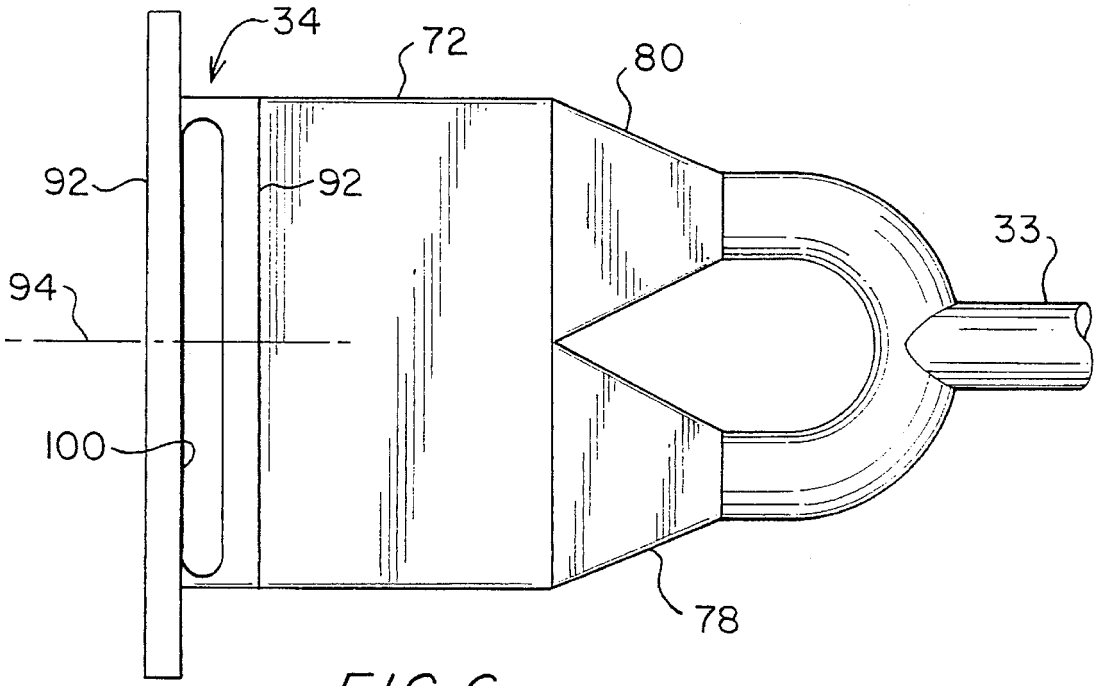

FIG. 6

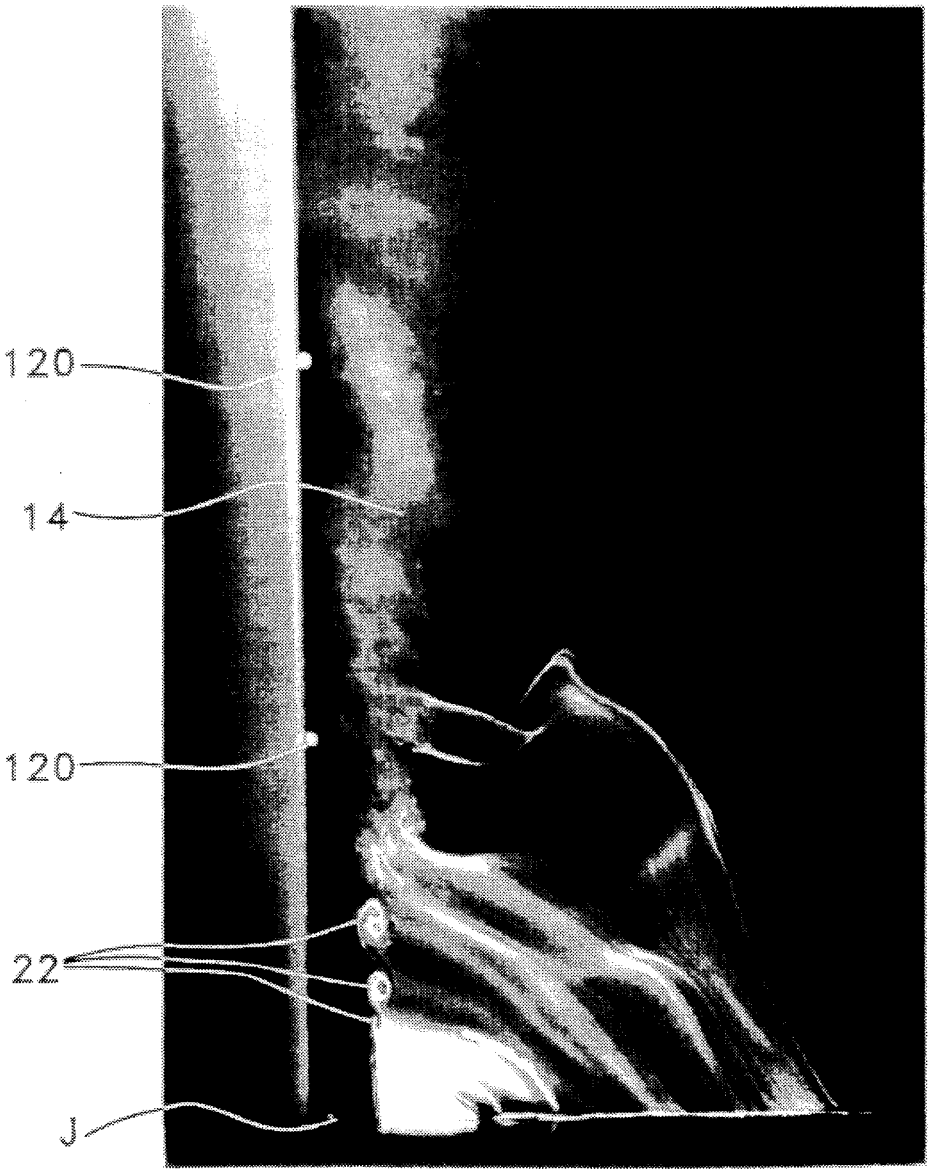

FIG. 7
(PRIOR ART)

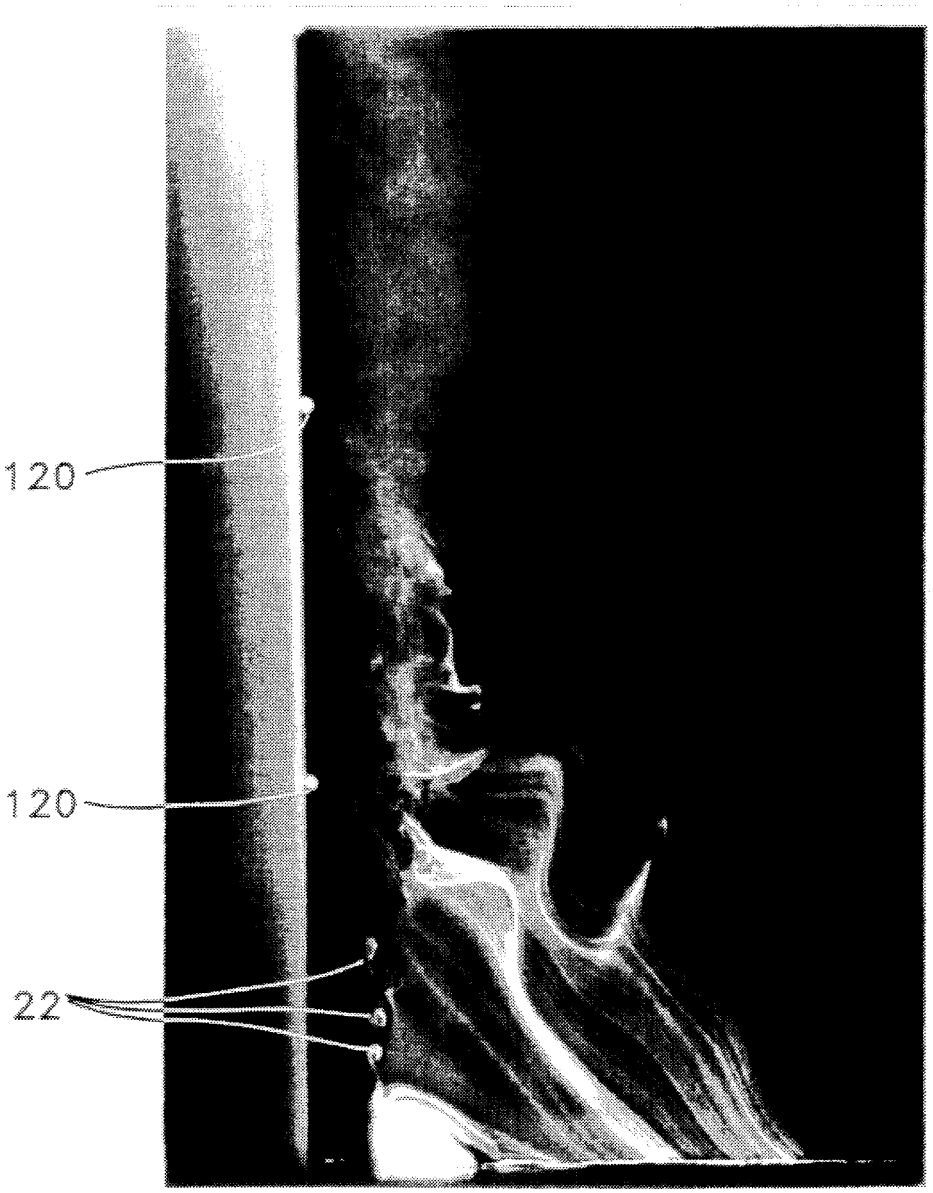

FIG. 8
(PRIOR ART)

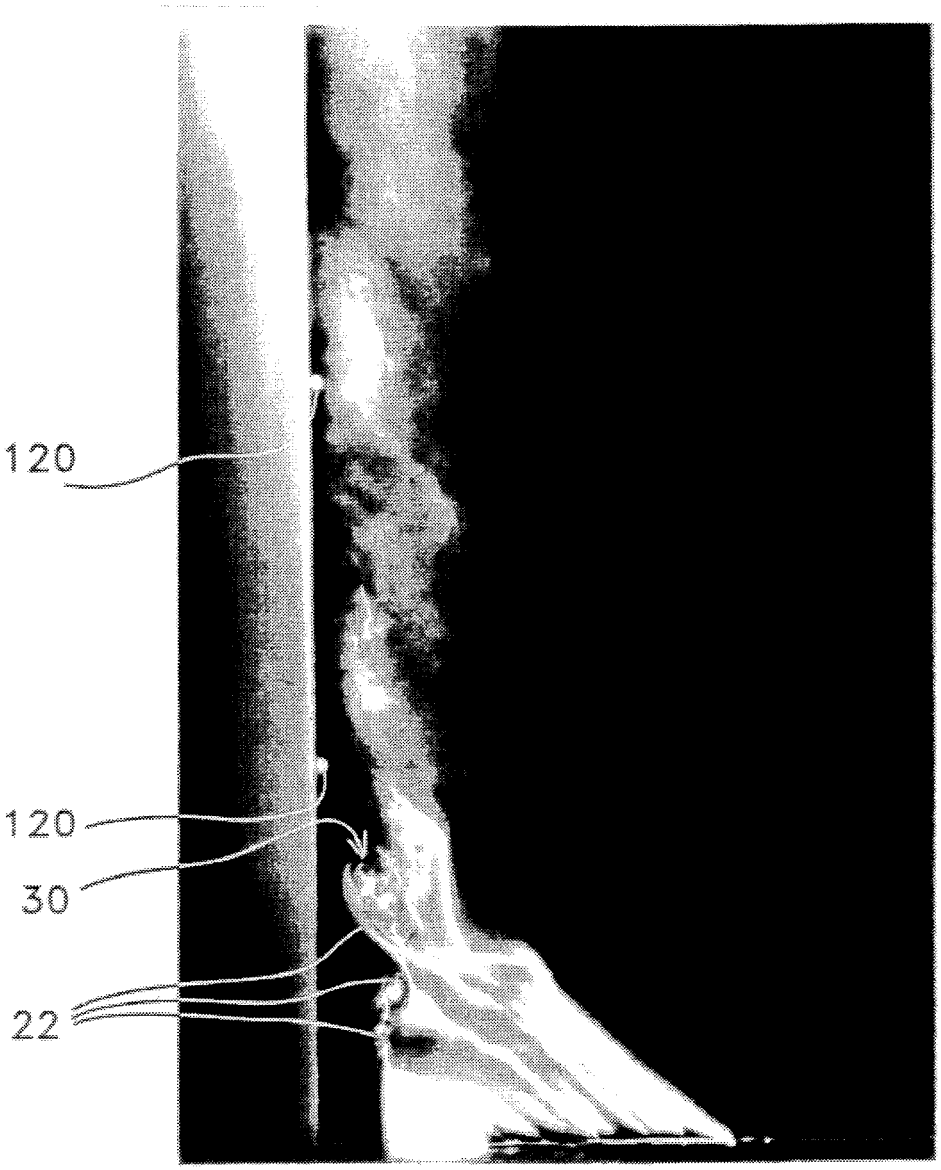

FIG. 9
(PRIOR ART)

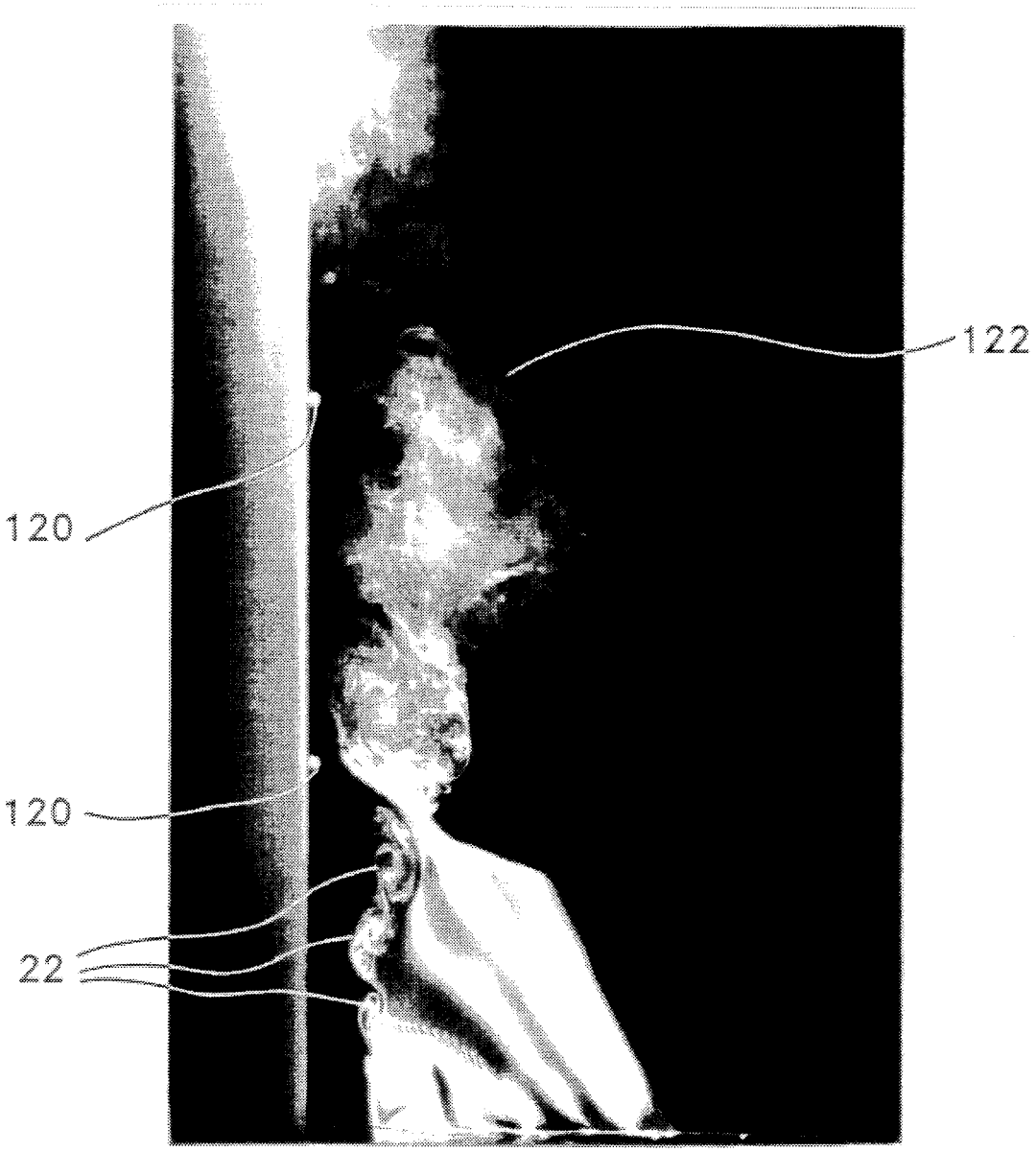

FIG. 10

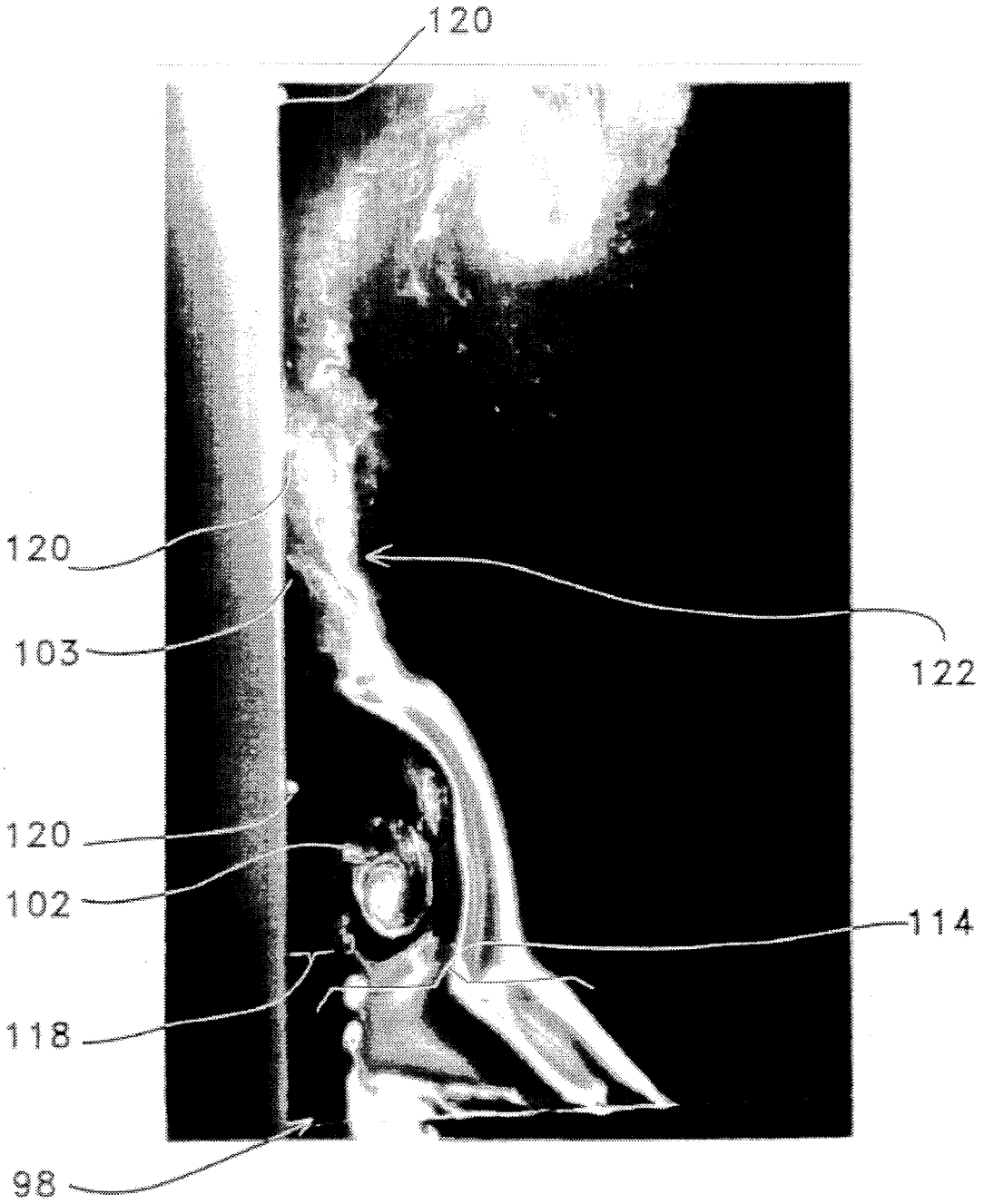

FIG. 11

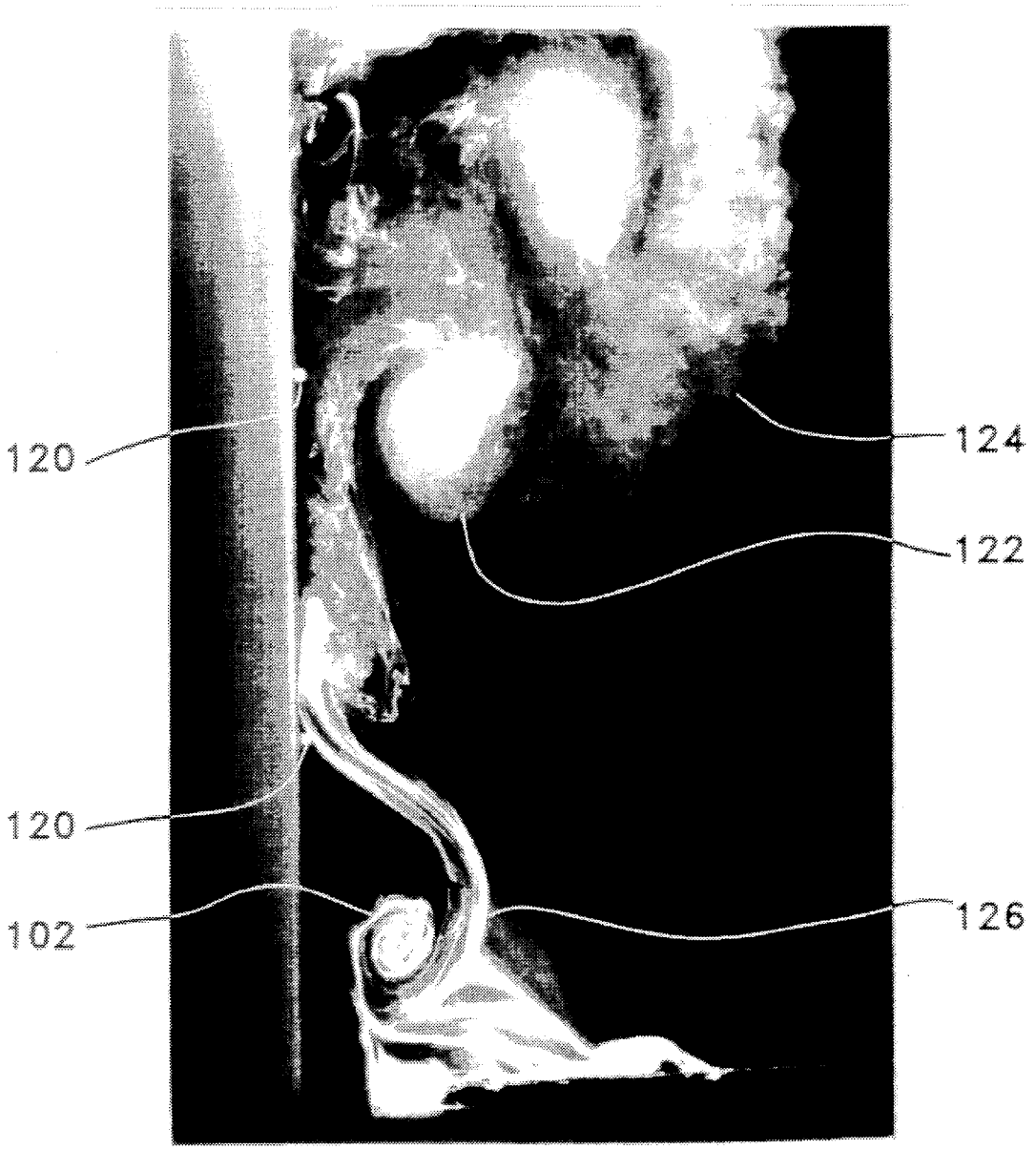

FIG. 12

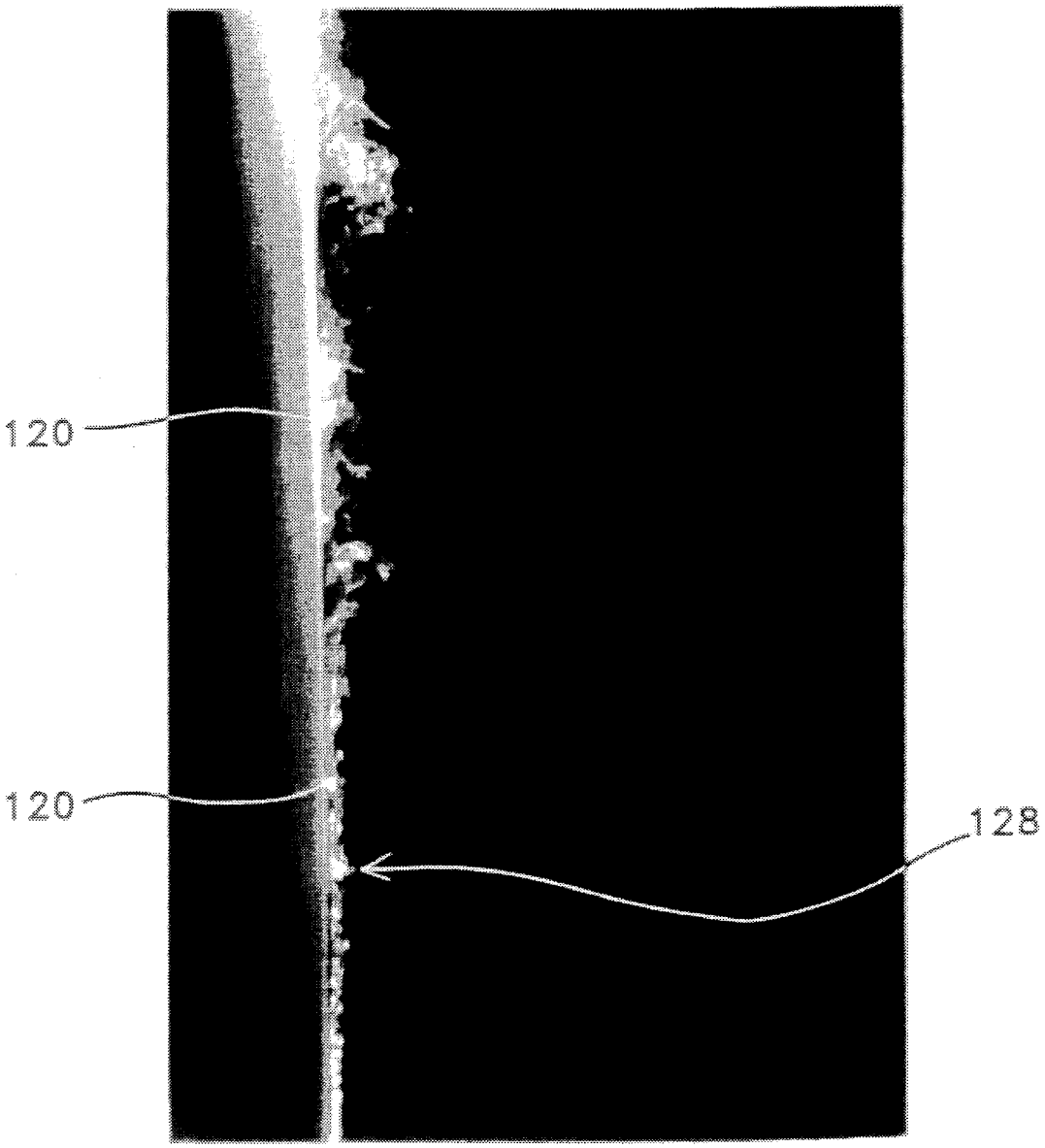

FIG. 13
(PRIOR ART)

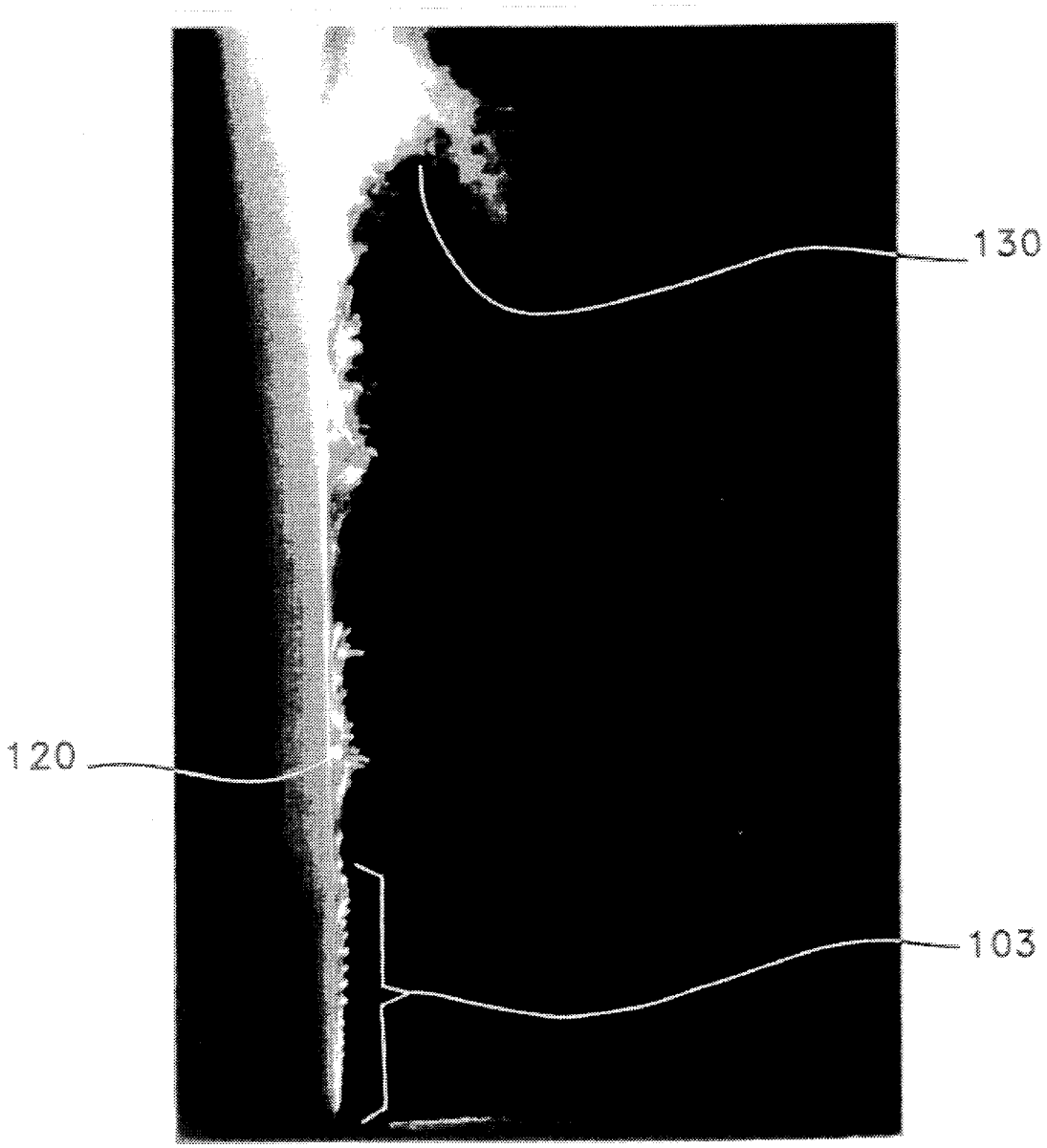

FIG. 14

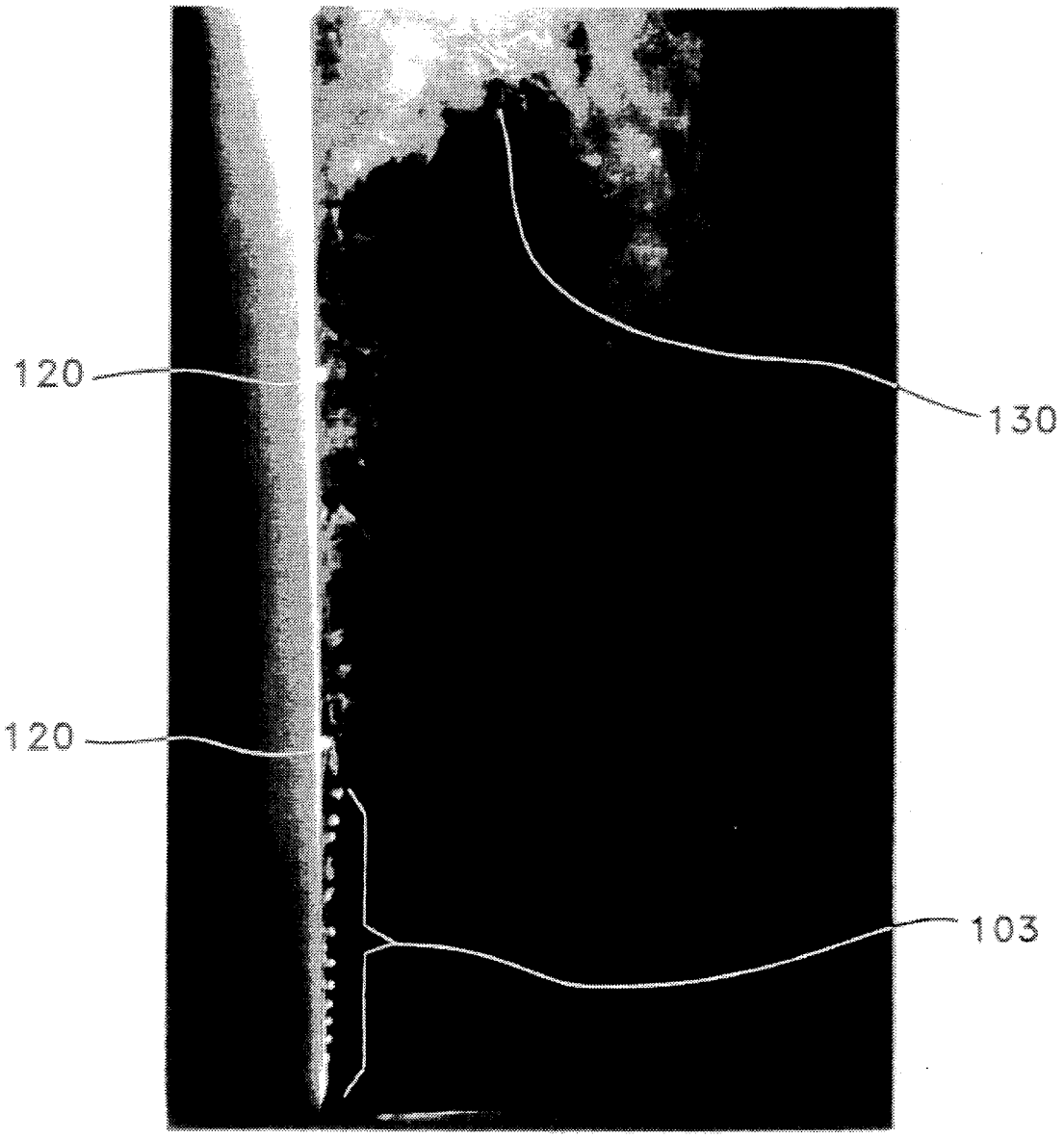

FIG. 15

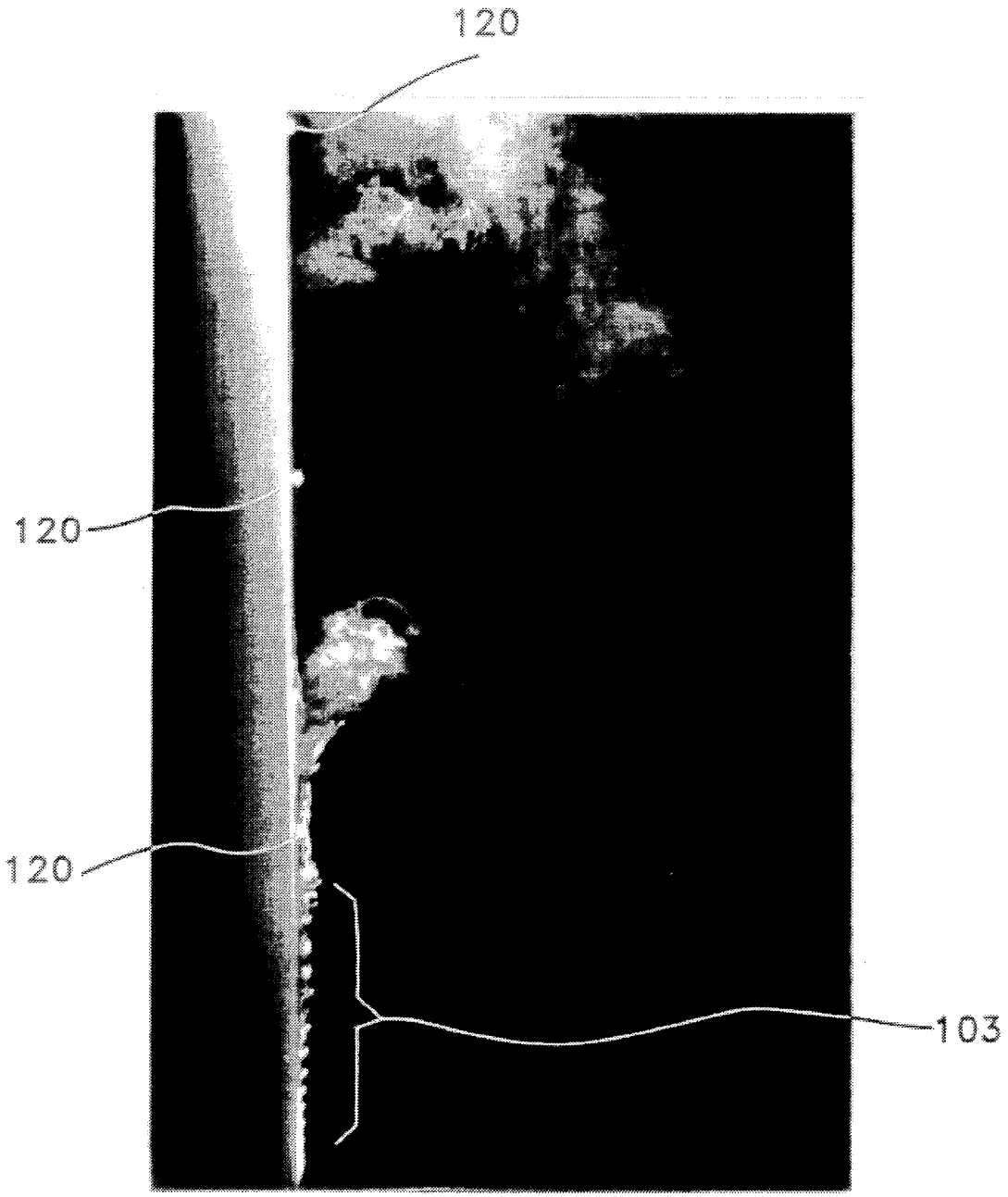

FIG. 16

ENHANCEMENT OF WALL JET TRANSPORT PROPERTIES

The United States Government has rights in this invention under Contract No. DE-AC3683CH10093 between the U.S. Department of Energy and the National Renewable Energy Laboratory, a Division of Midwest Research Institute.

BACKGROUND OF INVENTION

1. Field of Invention

The present invention relates generally to the mechanism of heat and mass transfer and more particularly to a method and apparatus for enhancing the natural instabilities in the boundary layer and free shear layer of a stream of fluid that flows along a solid surface.

2. Description of the State of Art

Heating, ventilation, and air conditioning (HVAC) systems introduce or inject air into a room through narrow, elongated nozzles or air diffusers to produce a substantially planar (narrow, elongated) jet or free jet of air. The emerging jet is the primary motion in the air diffusion process. However, as the jet entrains mass from the ambient room air it induces a secondary room air motion because the entrained mass is replaced by adjacent air. Therefore, the secondary room air motion is the mechanism by which ambient air, which carries potentially harmful pollutants, is brought to the jet where it is diluted by mixing and eventually removed in the return air. Farrington in U.S. Pat. No. 5,338,254 disclosed that the mixing properties of a free jet may be increased by imparting periodic pressure pulsations to an air flow upstream of the jet outlet so that the frequency of the pulsations matched the natural characteristic frequency of a turbulence in the free jet emerging from an air diffuser. This process has been found to be an effective way to achieve a high degree of mixing, of the incoming air with the ambient air in a room.

In addition to the mixing, entrainment, and spreading properties that exist for a free jet, heat and mass transport properties exist for another flow phenomena, referred to as a wall jet. The term "wall jet", as described by Bakke P., J. *Fluid Mechanics,* 2:467 (1957), refers to the flow field created "when a jet, consisting of a fluid similar to that of its surroundings, impinges on a plane surface and spreads out over the surface."

There are three basic means by which heat transfer can occur: convection, conduction, and radiation. Convection, refers to the transfer of heat between a body and a fluid, and takes place primarily by interchanging the physical position of molecules. This is the primary means of air drying. Whereas, the transfer of heat by conduction involves the interchange of kinetic energy between molecules without displacing molecules. Obviously, convective heat transfer involves flow phenomena, such that, heat transfer is governed by the fluid-flow characteristics **10**, of the system, as shown in FIG. **1**.

In general as a fluid F or collectively a jet J, emerges from outlet **12**, a free shear layer **14** develops at the free edge **16** of the jet J, and a boundary layer **18** develops at the plane surface S, such as, the surface of a paper, textile, wall, window, or ceiling. Each of these layers **14** and **18** grow and at some point P downstream they meet. The region near outlet **12**, where the two viscous layers **14** and **18** have not yet propagated all the way across the flow in the transverse direction, is the inviscid or potential core region **20** where

local velocities between the free shear layer **14** and boundary layer **18** are unaffected by viscosity.

In free shear layer **14**, turbulent structures **22** form due to instabilities that result from the steep velocity gradients and associated viscous effects. These turbulent structures **22** form an array of large-scale vortices which entrain mass. Farther downstream, the vortical structures interact by pairing, coalescing, and tearing and are eventually broken down by viscous diffusion until complete mixing has occurred.

Within boundary layer **18**, fluid molecules that come in contact with surface S remain essentially stationary (with respect to surface S), a condition referred to as no-slip, while molecules in jet J move with the velocity of jet J. Between these two extremes, layers of molecules move at intermediate velocities as the fluid shears (molecules slipping past one another). This region of shear as a whole is known as the boundary layer. At low velocities, each individual layer of molecules present in boundary layer **18** slips past the adjacent layers without significant interchange of molecules between layers. Under this condition boundary layer **18** is described as laminar. At higher velocities, boundary layer **18** becomes turbulent, although a portion of it known as the laminar sublayer **24**, remains in the laminar regime.

Mass transfer, just as heat transfer, is also dependent on the flow characteristics of the air. Through laminar layers, mass transfer is controlled by molecular diffusion, while through turbulent portions of the boundary layer, it is controlled by eddy or convective, diffusion. Molecular diffusion, which involves the interchange of position, molecule by molecule, is a relatively slow process. On the other hand, eddy diffusion involves a rapid relocation of molecules by turbulent motion. Thus, as with heat transfer, laminar sublayer **24** is a critical element of mass transfer.

The efficiency and overall effectiveness of heat and mass transport are properties of significant importance in many industries concerned with the removal of moisture from a substance or the cooling of a substance. For example, wall jets are utilized in the automotive industry, for purposes of defogging automobile windshields, in the paper and textile industries for purposes of evaporating moisture and in the glass and metal industries for cooling sheets or processed glass and metal.

For example, paper, to be useful, normally requires a moisture content of less than 0.1 lb water/lb paper. However, after pressing, the sheet still contains from 1 to 3 lb water/lb finished paper, depending on the particular machine and product. Since no particular method of direct liquid extraction has been developed to reduce the moisture content below the level of 1 lb/lb finished paper, it is necessary to resort to the relatively expensive process of evaporation. One mechanism commonly utilized in the evaporation process is air drying. In the air drying process, air serves as the medium for both heat and mass transfer. The heat for evaporation is applied to the sheet by convective heat transfer from the air surrounding the sheet, then evaporated moisture diffuses into this air and is ultimately carried away by it.

In air drying, the sheet can be considered as the solid, while air is the flowing fluid. Therefore, "[f]or overall convection heat transfer in air drying, heat flows through the laminar sublayer [**24**] by conduction, while through the turbulent portion of the boundary layer [**18**] it flows primarily by convection. Since conduction heat transfer through air is very inefficient (air being one of the best insulators known to man) while heat transfer by air convection is much more efficient, laminar sublayer [**24**] controls the overall rate

of heat transfer. Thus the thickness of laminar sublayer [24] is all-important to efficient heat transfer" (emphasis added). See, Coveney D., et at., *Paper Making and Paperboard Making*, 2nd ed., 3:405–551, 464 (1970).

"The need to improve the efficiency of air drying has led to the use of high-velocity and high-temperature air jets impinging directly on the sheet. By impinging the air at high velocity against the sheet, the boundary-layer thickness is minimized, thereby improving both heat and mass transfer . . . All impinging air dryers use air jets generally perpendicular to the web." Id. at 467. High velocity, high-temperature impingement air drying requires large power outputs and can not be used on lighter grades of paper. If the boundary-layer thickness could be minimized, without the requirement of high-velocity, high-temperature impingement, heat and mass transport would be enhanced leading to a more efficient and cost effective means of air drying.

SUMMARY OF THE INVENTION

Accordingly, it is a general object of this invention to provide a method for increasing the transport properties of a wall jet both at and between the solid and free surfaces.

A more specific object of the invention is to modify the boundary layer and free shear layer of a wall jet as it attaches to a plane surface, thus increasing both heat and mass transfer from the plane surface and mixing of ambient air.

Additional objects, advantages, and novel features of the invention shall be set forth in part in the description that follows, and in part will become apparent to those skilled in the art upon examination of the following or may be learned by the practice of the invention. The objects and the advantages may be realized and attained by means of the instrumentalities and in combinations particularly pointed out in the appended claims.

To achieve the foregoing and other objects and in accordance with the purposes of the present invention, as embodied and broadly described therein, the method of this invention may comprise an apparatus and method for enhancing the natural instabilities in the boundary layer and the free shear layer of a wall jet, thereby increasing the transport of heat and mass from a solid surface. Such enhancement can be created, for example, by rotating a disk within a conduit about an axis perpendicular to a flow of the fluid in a duct upstream of the wall jet, thereby creating pulsed pressure variations in the flow of fluid that extends into the jet as it attaches to a plane surface.

BRIEF DESCRIPTION OF THE DRAWINGS

The file of this patent contains at: least one drawing executed in color. Copies of this patent with color photographs will be provided by the United States Patent and Trademark Office upon request and payment of the necessary fee.

The accompanying drawings, which are incorporated in and form a part of the specifications, illustrate the preferred embodiments of the present invention, and together with the descriptions serve to explain the principles of the invention. For the purposes of FIGS. **7–16**, the Strouhal number is defined as the frequency times the width of the nozzle divided by the exit velocity.

In the drawings:

FIG. **1** is a schematic cross-sectional representation of a wall jet;

FIG. **2** is a perspective view of a jet excitation system and its placement according to the present invention necessary to simultaneously enhance natural instabilities in the boundary layer and the free shear layer of a wall jet;

FIG. **2***a* is a perspective view of a jet excitation system according to an alternative embodiment, for heat and mass transport from a moving sheet of material;

FIG. **3** is a schematic representation of a jet excitation system and its placement according to the present invention in side elevation view as installed adjacent a planar surface;

FIG. **4** is a cross-sectional view taken along line **4—4** of FIG. **3** showing the jet excitation mechanism comprising a rotating disk installed in a ventilation duct, and a perspective view of the motor rotating the disk;

FIG. **5** is a side view of the diffuser having a wire positioned across the width of the nozzle;

FIG. **6** is a plan view of the diffuser having a wire positioned across the width of the nozzle and through the adjacent wall;

FIG. **7** displays smoke generated outside of a wall jet using the wire shown in FIG. **5**, and visualized using high-speed photography with film speeds at 1/6400 second having a Strouhal number of 0.000;

FIG. **8** displays smoke having regular vortices generated outside of a wall jet using the wire shown in FIG. **5**, and visualized using high-speed photography with film speeds at 1/6400 second having a Strouhal number of 0.000;

FIG. **9** displays smoke having irregular vortices generated outside of a wall jet using the wire shown in FIG. **5**, and visualized using high-speed photography with film speeds at 1/6400 second having a Strouhal number of 0.000;

FIG. **10** displays smoke generated outside of a wall jet using the wire shown in FIG. **5**, and visualized using high-speed photography with film speeds at 1/6400 second having a Strouhal number of 0.028;

FIG. **11** displays smoke generated outside of a wall jet using the wire shown in FIG. **5**, and visualized using high-speed photography with film speeds at 1/6400 second having a Strouhal number of 0.056;

FIG. **12** displays smoke generated outside of a wall jet using the wire shown in FIG. **5**, and visualized using high-speed photography with film speeds at 1/6400 second having a Strouhal number of 0.112;

FIG. **13** displays a typical visualization of the smoke particles injected into the boundary layer near the outlet for the jet through the hole in the wall, that the wire shown in FIG. **5** traverses, and visualized using high-speed photography with film speeds at 1/6400 second having a Strouhal number of 0.000;

FIG. **14** displays a typical visualization of the smoke particles injected into the boundary layer near the outlet for the jet through the hole in the wall, that the wire shown in FIG. **5** traverses, and visualized using high-speed photography with film speeds at 1/6400 second having a Strouhal number of 0.028;

FIG. **15** displays a typical visualization of the smoke particles injected into the boundary layer near the outlet for the jet through the hole in the wall, that the wire shown in FIG. **5** traverses, and visualized using high-speed photography with film speeds at 1/6400 second having a Strouhal number of 0.056;

FIG. **16** displays a typical visualization of the smoke particles injected into the boundary layer near the outlet for the jet through the hole in the wall, that the wire shown in FIG. **5** traverses, and visualized using high-speed photography with film speeds at 1/6400 second having a Strouhal number of 0.112.

DETAILED DESCRIPTION OF THE PREFERRED EMBODIMENT

The preferred method of simultaneously enhancing the natural instabilities in the boundary layer and in the free shear layer of a wall jet according to this invention may be accomplished with the use of a pulsator mechanism **30** similar to that shown in FIG. **2**, and described in U.S. Pat. No. 5,338,254 incorporated herein by reference. It comprises positioning a pulsator mechanism **30** in an air delivery duct **32** upstream from a diffuser **34** for imparting periodic pressure pulsations to an air steam or flow **36** that is being delivered to a plane surface **100**, such as a sheet of paper, textile, window, or a ceiling or wall of a room. The pressure pulsations in the air flow **36** simultaneously enhance the natural instabilities in the boundary layer **118**, as shown in FIG. **3**, and the free shear layer **114** which form as the jet **98** of air emerges from the diffuser **34** and attaches to plane surface **100** as will be described in more detail below. Essentially, however, pulsing the air stream **36** at a periodic frequency causes significant growth of instabilities in boundary layer **118** that ejects flow from boundary layer **118** into the free shear layer **114** of the jet **98** while surrounding fluid is brought into direct contact with plane surface **100** as a result of forced velocity fluctuations, thereby increasing heat and mass transfer from the plane surface **100** and increasing mixing of the ambient air with the jet **98**. While jet **98** is shown flowing vertically the jet may also be positioned to flow horizontally, as shown in FIG. 2*a*.

The pulsator mechanism **30** preferably, although not necessarily, comprises a valve **38** positioned in the duct **32** for alternately occluding and opening the duct **32** to a flow of supply air **36**. The supply air **36** may be from a conventional forced-air HVAC system, fan, or other source of fresh, heated, or cooled air (not shown), as will be readily understood by persons skilled in the art. The valve **38** illustrated in FIG. **2**, is in the form of a butterfly valve or damper with a disk **40** mounted on a diametral rotatable shaft **42**, which extends diametrically through the duct **32**. The disk **40** can be either rotated or oscillated on the shaft **42** to alternately occlude and open the duct **32** to the flow of air **36**.

The pulsating mechanism **30**, illustrated in FIG. **2**, includes an enlarged section of duct **32**, which forms a valve housing **44**. Valve housing **44** may also be formed in a section of duct **32** which is not enlarged. The shaft **42** extends diametrically through the valve housing **44** and is journaled for rotation in bearings **46**, **48** mounted in opposite sides of valve housing **44**, as best seen in FIG. **4**. The disk **40** can be fastened to shaft **42** with appropriate fasteners, such as screws **50**, **52**, also shown in FIG. **4**.

Referring to FIGS. **2**, **3**, and **4**, the disk **40** of valve **38** is rotated, as indicted by arrow **54**, about an axis **56** defined by shaft **42** to periodically occlude and open the duct **32** to air flow **36**. When the disk **40** is rotated to a plane perpendicular to the longitudinal axis of duct **32**, it occludes duct **32**, and when it rotates an additional 90 degrees to a plane parallel to the longitudinal axis of the duct **32**, as illustrated in broken lines **40'** in FIG. **3**, the duct **32** is completely open. Of course degrees of partial occlusion and openness occur at degrees of rotation between those two extremes. When the duct **32** is occluded by disk **40**, air flow is restricted, or reduced, in the connecting portion **33** of duct **32** beyond the valve **38**. On the other hand, when the disk **40** is in the open position **40'**, the full flow and pressure of air flow **36** is transmitted into the connecting portion **33**. The result is a sequence of pressure fronts and rarefaction, thus pressure pluses, of the air flow **60** into diffuser **34**. Of course a smaller disk **40** in the same size housing **44** would result in only partial occlusion of duct **32**, thus lower amplitude pressure pulses, if desired. However, as the percent of occlusion decreases, the frequency needed to achieve the same effect increases.

The shaft **42** and disk **40** are rotated by a pulley **62** mounted on shaft **42** outside housing **44** and driven by an electric motor **64** connected to pulley **62** by a motor pulley **66** and belt **68**. A variable speed controller **70** is provided to adjust angular velocity of the rotating disk, thus to adjust the period and frequency of the pressure pulses in the air stream **60**.

As mentioned above, instead of rotating disk **40**, it could also be oscillated between the occluded and open positions. A wide variety of actuators, such as a crank, pneumatic cylinder, solenoid, or the like could be used to impact such oscillating motion to disk **40**. Furthermore, other mechanisms, such as oscillating shutters, fan blades, gates, or any number of other mechanism could be used to create the pulsed air flow required to practice this invention.

The intermediate connecting portion **33** of duct **32** directs the pulsed air flow **60** into an enlarged plenum **72** of diffuser **34**. To help equalize air flow throughout plenum **72**, the pulsed stream of air **60** is directed via forked duct sections **74**, **76** of duct **32** into respective ends **78**, **80** of plenum **72**. Also, as illustrated in FIG. **3**, a plurality of turning vanes **82** and flow conditioning screens **84** can be used to minimize and dissipate any turbulent structures in the air flow through the plenum **72** and to further ensure equal distribution of air flow and pressure throughout plenum **72**. To ensure a highly uniform outlet velocity a curved extension **86** was inserted into the nozzle outlet **88**. Curved extension **86** has a radius of curvature large enough to prohibit the boundary layer **118** forming on the surface **87** of extension **86** from separating thus avoiding a region of reverse flow that would produce a highly nonuniform outlet velocity. The nozzle outlet **88** of the diffuser **34** is preferably, but not necessarily, an elongated, narrow slot, positioned adjacent to plane surface **100**, so that a jet **98** emerging from nozzle outlet **88** impinges and attaches to and spreads over the plane surface **100**.

As best illustrated in FIG. **2**, the plenum **72** of diffuser **34** narrows to a neck **90** just before the slotted opening on nozzle **88**. Flanges **92** around the slotted nozzle **88** facilitate mounting the nozzle in a position so that the emerging jet **98** impinges and attaches to plane surface **100**. Flange **92** also provides structural integrity to the nozzle **88**.

The jet **98** of air emerging from the nozzle **88** attaches to and spreads out over the plane surface **100**. A natural occurrence upon the introduction of a jet J at some constant, nonpulsed velocity along a plane surface S is the formation of a boundary layer **18** and a free shear layer **14** along the plane surface S and ambient air A, respectively, as discussed previously and illustrated in FIG. **1**.

It has been found according to this invention that periodic large amplitude, low-frequency disturbances of the air flow **36** in duct **32** causes a substantial excitation of the jet **98** and results in substantially larger and more active vortices **102** and **103** in the free shear layer **114** and boundary layer **118**, respectively. This enhanced instability increases the entrainment of surrounding fluid and minimizes the thickness of the boundary layer **118**, thus resulting in greater transport of mass and heat between the surrounding fluid, the free shear layer **114**, the boundary layer **118**, and the plane surface **100**.

The pulse rate or frequency of the pulsating air flow **60** in duct section **33** can be varied or adjusted to enhance or diminish the instabilities of jet **98** by varying the speed of

rotation of the disk **40** in valve **38**. A variable speed control **70** (FIG. **2**) can be provided for this purpose. Each one-half revolution of the disk **40** places the disk at its duct-occluding position once and at its open duct position once, thus causing one pulse. A full revolution of disk **40**, therefore, causes two pulses in the duct section **33** and diffuser **34**. Of course, other valve **38** actuation mechanisms, such as oscillators, pneumatic actuators, and the like, as discussed above, can be regulated in whatever manner is appropriate to the valve structure and actuator used to produce the desired pulse rate according to this invention.

In general, however, pulsing the air flow **60** at a frequency in the range of **1** to 50 Hz can produce significant minimization of boundary layer **118**, with the most substantial heat and mass transport benefits resulting from pulse frequencies with a Strouhal number of 0.056 or 0.112, in the subaudible range below about 20 Hz for a Reynolds number of about 4500. The Strouhal number is defined as the frequency times the width of the nozzle divided by the exit velocity.

In an alternate embodiment, shown in FIG. **2***a*, diffuser **234** may be positioned so that emerging jet **298** flows horizontally. The pulsator mechanism, as discussed previously, is positioned in an air delivery duct (not shown) upstream from a diffuser **234** for imparting periodic pulsations to an air stream or flow that is being delivered to a plane surface **200** of a sheet **202** of material such as a sheet of paper, textile, metal or glass. Sheet **202** prior to being rolled into roll **210** passed over an assembly of reels **204**, **206** and **208**. Diffuser **234** is positioned above reel **204** so that as the sheet **202** moves toward the diffuser **234**, emerging jet **298** attaches to the plane surface **200** and transports heat and mass from the plane surface **200** prior to sheet **202** being rolled up.

EXAMPLE

An example jet excitation system **28** substantially as described above, was set up and operated to observe jet excitation results. The nozzle **88** was designed to approximate actual diffuser geometries, but with a uniform outlet velocity. The nozzle outlet was 2.16 cm wide by 119 cm long, the width and length being the transverse and longitudinal dimensions, respectively. The final aspect ratio, i.e., nozzle length/nozzle width, was 55. A seven inch curved extension **86**, was inserted into the neck **90** through the nozzle **88**. A vertical discharge orientation were used, so that buoyancy forces were minimized. For nonisothermal cases the air was chilled by a cooling coil (not shown) located on the downstream side of a squirrel cage blower (not shown). The diffuser **34** was positioned adjacent a laminated wall, so that the emerging jet **98** would attach to the plane surface **100** of the wall. The laminated wall was made from a piece of rigid insulation with a surface of hard, thin, synthetic material similar in texture to a common cardboard surface but smoother and harder. The air flow **36** in duct **32** was supplied from a squirrel cage blower located in an adjacent room via a 23.0 cm galvanized duct **32**. The pulsator mechanism **30** was located 5.0 m upstream of the nozzle **88**. In order to prevent the transmission of mechanical vibration from the pulsator mechanism **30** to the nozzle **88**, sections of flexible duct **74** and **76**, shown in FIG. **2**, were used immediately downstream of the pulsator mechanism **30**. An optical tachometer (not shown) with a digital readout detected the rotational speed of the disk **40** directly from the pulley **62**. A synchronous belt **68** and pulleys **62** and **66** in the form of sprockets were used to prevent slippage. The motor **64** could be varied in speed from 0 to about 1680 revolutions per minute. The turning vanes **82** and screens **84** dissipated any turbulent structures introduced to the air flow **60** by the pulsator mechanism **30** to ensure that the fluid structures which had been created by and separated from the pulsator mechanism **30** were dispersed.

Hot wire anemometry (not shown) was used to collect flow information. Since disturbance frequencies ranged from 4 to 16 Hz, a sampling frequency of 1000 Hz was chosen to provide a power spectral density range of 0.5 to 500 Hz, thereby allowing a sampling of higher harmonies. A sampling time of 120 seconds provided one hundred twenty occurrences at the low end of 1.0 Hz, the quarter harmonic of 4 Hz. Velocity histories produced by each test were decomposed to determine the mean and periodic velocities, the peak velocity fluctuations, and the turbulence intensity for each test point and condition. The mean velocities from groups of individual test points produced the velocity profiles, which showed the shape and mixing characteristics of the jet.

High-speed photographic techniques were used to visualize the structures by which mixing of the jet **98** occurs. By producing smoke at or adjacent the outlet **88** and photographing, the actual mixing of the jet **98** with the ambient air and the decrease in the thickness of the boundary layer **118** can be seen. Wire **94**, shown in FIGS. **5** and **6**, is stretched across the width of nozzle **88** and an oil is then applied to wire **94**. Applying a current to wire **94** results in the heating of the oil and smoke is thereby produced. The high frequency and rapid occurrence of the physical events which result in mixing and the minimization of the boundary layer **118** required that short exposures be taken to visualize these events. FIGS. **7**–**16** are still photographs of the smoke in the jet **98** taken with an exposure of 1/6400 seconds.

The visualization of the natural jet J reveals that small-scale vortical structures **22**, Kelvin-Helmholtz instabilities, roll up in the free shear layer **14** at the turbulent interface.

FIG. **7** shows a typical visualization of the natural jet J schematically represented in FIG. **1**. The spherical position markers **120** are placed to indicate axial distance in increments of five nozzle widths. They were positioned in a different longitudinal plane than the plane in which the smoke was generated in order to not affect the flow in the visualized plane. The high-speed rims verify that the vortices **22** roll up in the free shear layer **14** during the first four to five nozzle widths at which point they begin to dissipate. The size and frequency of natural vortices is irregular and the interaction between them, i.e., pairing and coalescing, can, but does not always occur. For example, a vortex array, shown in FIG. **8**, forms in the free shear layer **14** from about one and one-half to three nozzle widths and is fairly regular with the vortices **22** being nearly evenly spaced and comparable in size. In contrast to this, the vortices **22** in the same region (shown in FIG. **9**) are coalescing and forming into larger structures. The relatively large structure **30** at about three and one-half nozzle widths is the result of the coalescing of smaller vortices **22**, three of which can be seen interacting at about two nozzle widths. This process can be seen repeatedly in the high-speed films and usually occurs by an axial distance of about five nozzle widths.

Visualization of the Pulsed Wall Jet

The structural formation and interaction differed significantly between the disturbance frequencies. The flow was affected by all of the frequencies but the periodic formation of large scale structures at the disturbance frequency was not as obvious for the jet pulsed at Str=0.028 as it was for the higher disturbance frequencies. The structures produced by pulsing the jet **98** at Str=0.028 did not produce the coherent

vortical structures that were observed for disturbances of the higher frequencies. Interaction of the large-scale structures occurred frequently, but not always, for the jet pulsed at Str=0.028 or Str=0.056.

Increased instability in the boundary layer **118** was also observed in the pulsed jet. The formation of vortices or instability structures **103** in this region was most obvious for the jet pulsed at Str=0.056, shown in FIG. **15**. The particles released in the boundary layer **118** interacted with the fluid in the free shear layer **114** more for the pulsed jet **98** than for the natural jet J. Interaction of the instability structures **103** (not shown) in the boundary layer **118** with the large-scale structures **102** in the free shear layer **114** was clear for the jet pulsed at Str=0.056, (shown in FIG. **11**), less significant for the jet pulsed at Str=0.112 (shown in FIG. **12**) and not noticeable for the jet pulsed at Str=0.028 (shown in FIG. **10**). As shown in FIG. **11**, the large-scale structure **102** is no longer circular, but instead is deformed. This is a result of the periodic instability of boundary layer **118** as the instability structures **103** (not shown) propogate across the jet **98** to deform the large-scale structure **102** in the free shear layer **114** leading to the breakdown of large scale structure **102** and increased mixing.

The Free Mixing Layer

The structures that entrain mass in a wall jet are the vortices **102** that form in the free shear layer **114**. The larger these vortices **102** are the greater the mass of the surrounding fluid that is entrained. Once the structures have formed interaction between them can affect the size of the structures and the rate of viscous dissipation of the structures but not entrain additional mass. The visualization of the free shear layer **114** showed that the large amplitude, low-frequency disturbances produced large-scale vortices **102** in the free shear layer **114** that showed both interaction and non-interaction depending on the disturbance frequency.

The flow visualization showed that, similar to the hotwire results, disturbances at Str=0.028 affected the turbulence structures of the jet **98** but to a much lesser degree than the higher frequencies that were tested. This can be seen by comparing the jet **98** exposed to disturbances of Str=0.028, shown in FIG. **10**, to the natural jet J which was shown in FIG. **7**.

The flow field in the free shear layer **114** over the first 12 nozzle widths is composed of vortical structures which are larger and more interactive than those of the natural jet J. The high speed film showed that these structures were formed by the coalescing of smaller structures. A large structure formed once for each cycle of velocity fluctuation. This structure continued to grow by coalescing with some of the smaller-scale structures which formed in its wake. By about 10 nozzle widths the structure **122** had grown to its largest size and began to dissipate. This structure **122** eventually dissipated completely at which point complete mixing had occurred.

FIGS. **11** and **12** show typical structures in the near field of the jet **98** pulsed at Str=0.056 and Str=0.112, respectively. The flow visualization showed clearly that the velocity fluctuations at Str=0.056 and Str=0.112 produced large vortices at the point in the velocity fluctuation where the velocity was accelerating from its minimum. This vortex then captured surrounding fluid and carried it downstream. The large-scale vortices coalesced into a larger vortex. The beginning of this process can be seen in FIG. **12** between the two structures **122** and **120** at 10 and 13 nozzle widths, respectively. The structure **122** at 10 nozzle widths is in the wake of the structure **124** at 13 nozzle widths and is being drawn into it in a clockwise direction.

The streakline **126** formed by the smoke particles generated farthest away from the wall reveals the dynamics of the jet **98** boundary. As the vortex forms in the first 5 nozzle widths it pulls fluid into itself by transport of vorticity through viscosity. The streakline **126** gets stretched around the vortex with most of the particles on the downstream side being formed against the wall in the wake of the preceding vortex and those adjacent to the forming vortex being drawn into it. In this manner the jet **98** boundary fluctuates perpendicular to the wall.

The Wall Layer

Flow visualization showed that the interaction between the quiescent fluid and the wall was greater for the jet pulsed **98** at Str=0.028 and much greater for the jet pulsed **98** at Str=0.056 and Str=0.112 than for the natural wall jet J. FIG. **13** shows a typical visualization of the smoke particles **128** released into the wall layer near the outlet for the natural wall jet J. The particles have become diffused by an axial distance of 15 nozzle widths and some of them have been transported into the free shear layer **14**. For the jet pulsed at Str=0.028, shown in FIG. **14**, at the same axial distance of 15 nozzle widths the particles have been transported farther away from the wall by the vortical structure generated than the outlet velocity fluctuation produced.

For the jet pulsed at Str=0.056 the particles at 15 nozzle widths have been transported well into the free shear layer **114** by the large-scale vortex **130**, as shown in FIG. **15**. This photograph demonstrates the increased mass and vorticity transport in the pulsed jet **98**, particularly when compared to the natural jet J in FIG. **13**. Also clearly visible is the formation of instability structures **103** in the boundary layer **118** interface over the first 5 nozzle widths.

For the jet pulsed at Str=0.112 the structure is much like that at Str=0.056 except that the phenomena produced by the artificial vortical structures occur at twice the frequency. The instability structures **103** are approximately of the same scale as can be seen in FIGS. **16**. Again instabilities can be seen forming in the boundary layer **118** leading to the ejection of boundary layer **118** fluid into the free shear layer **114**.

While the fluid used in the above description was an air stream, other gases or liquids may also be utilized by the present invention.

The foregoing description is considered as illustrative only of the principles of the invention. Furthermore, since numerous modifications and changes will readily occur to those skilled in the art, it is not desired to limit the invention to the exact construction and process shown as described above. Accordingly, all suitable modifications and equivalents may be resorted to falling within the scope of the invention as defined by the claims which follow.

The embodiments of the invention in which an exclusive property or privilege is claimed are defined as follows:

1. A method for enhancing the transport of heat and mass from a solid surface by minimizing the thickness of the boundary, layer of an air flow that attaches to and spreads out over the surface of said solid comprising the steps of imparting periodic pressure pulsations to the air in the plenum, and impinging said pulsated air on said solid surface.

2. The method of claim **1**, including the steps of imparting large-amplitude, low-frequency disturbances to the air flow by directing the air flow through a confined flow path before impinging the air on said solid surface, and sequentially occluding and opening the flow path.

3. The method of claim **2**, including the steps of positioning a disk in the confined flow path in an orientation such

that is occludes the flow path in an orientation such that it occludes the flow path in a first position and opens the flow path in a second position.

4. The method of claim **3**, including the steps of mounting said disk on a rotatable axle in such a manner that said disk is rotatable repeatedly about an axis defined by said shaft through said first position and said second position, and rotating said disk about said axis.

5. A drying and cooling apparatus for transporting heat and mass from a solid surface in contact with ambient air, comprising:

a source of air under a higher pressure than the ambient air in contact with the solid surface;

conduit means extending from said source to said solid surface for confining, directing and impinging a flow of the air from said source to and on said solid surface; and

pulsator means positioned in the flow of the air between said source and said solid surface for imparting a pulsating variation in pressure in said flow of the air, wherein said pulsator means includes a valve housing for confining the flow of air in a direction that defines a flow axis, and gate means position in said value housing for sequentially occluding and opening said valve housing to the flow of said air, said gate means including a disk mounted rotatably in said valve housing in a manner that defines an axis of rotation that extends diametrically through said disk and transversely through said valve housing to the flow of air and a second position that is open to the flow of air through the valve body.

6. The drying and cooling apparatus of claim **5**, including drive means connected to said disk for rotating said disk between said first and said second position.

7. The drying and cooling apparatus of claim **6**, including speed control means connected to said drive means for varying the speed of rotation of said disk.

8. The drying and cooling apparatus of claim **7**, wherein said conduit means includes nozzle means for impinging said flow of air on said surface.

9. The drying and cooling apparatus of claim **8**, wherein said conduit means includes an enlarged plenum positioned in said conduit means immediately upstream of said nozzle means for equalizing distribution of the flow of air uniformly through the nozzle means.

10. The drying and cooling apparatus of claim **9**, wherein said pulsator means is positioned upstream of said plenum in said flow of air.

11. The drying and cooling apparatus of claim **10**, wherein said nozzle means includes a narrow, elongated opening from said plenum positioned adjacent said solid surface.

12. The drying and cooling apparatus of claim **11**, wherein said solid surface is transparent.

13. The drying and cooling apparatus of claim **12**, wherein said transparent solid surface is an automobile windshield.

14. The drying and cooling apparatus of claim **11**, wherein said solid surface is a sheet of paper.

15. The drying and cooling apparatus of claim **11**, wherein said solid surface is a textile.

16. The drying and cooling apparatus of claim **11**, wherein said solid surface is a sheet of processed glass.

17. A method for enhancing the natural instabilities in the boundary layer and free shear layer of an air flow that is expelled from a plenum in a manner that the air flow impinges upon and attaches to a plane surface, including the step of imparting periodic pressure pulsations to the air in the plenum to enhance the instabilities in the boundary layer and the free shear layer.

18. The method of claim **17**, wherein said periodic pressure pulsations result from large-amplitude, low frequency disturbances.

19. The method of claim **17**, including the step of pulsing the air at a frequency in the range of about 4 to 16 hertz.

20. The method of claim **17**, including the step of pulsing the air at a Strouhal number in the range of 0.028 to 0.112.

* * * * *