US005591690A

United States Patent [19]

King et al.

[11] Patent Number: 5,591,690

[45] Date of Patent: Jan. 7, 1997

[54] **SELF ASSEMBLED MOLECULAR MONOLAYERS ON HIGH SURFACE AREA MATERIALS AS MOLECULAR GETTERS**

[75] Inventors: **David E. King**, Lakewood; **Gregory C. Herdt**; **Alvin W. Czanderna**, both of Denver, all of Colo.

[73] Assignee: **Midwest Research Institute**, Kansas City, Mo.

[21] Appl. No.: **267,715**

[22] Filed: **Jun. 29, 1994**

[51] **Int. Cl.**[6] **B01J 20/22**

[52] **U.S. Cl.** **502/401**; 210/490; 210/483; 210/502.1

[58] **Field of Search** 502/401, 416; 210/490, 502.1, 506, 483

[56] **References Cited**

U.S. PATENT DOCUMENTS

4,746,572	5/1988	Glajch et al.	428/403
4,929,589	5/1990	Martin et al.	502/406
4,957,890	9/1990	Wieserman et al.	502/4
4,962,073	10/1990	Martin et al.	502/4
4,964,972	10/1990	Sagiv et al.	204/418
4,983,566	1/1991	Wieserman et al.	502/401
4,994,429	2/1991	Wieserman et al.	502/401
5,124,289	6/1992	Martin et al.	502/4
5,126,310	6/1992	Golden et al.	502/417
5,134,110	7/1992	Sudo et al.	502/401
5,145,494	9/1992	Sowinski et al.	55/74
5,175,137	12/1992	Golden et al.	502/417

OTHER PUBLICATIONS

Bigelow et al., "Oleophobic Monolayers. I. Films Adsorbed From Solution in Non-polar Liquids" J. Colloid Science 1: 513–538 (1946).

Adamson, Physical Chemistry of Surfaces, Wiley, 1982.

Ulman, "Ultrathin Organic Films: From Langmuir–Blodgett to Self–Assembly" J. Mater. Educ. 11(3): 205–280 (1989).

Ramanathan, Proceedings of the ASHRE/SUEH Conferences IAQ89 p. 33, Apr. 1989.

Ricco et al., "Self–Assembling Monolayers on Saw Devices for Selective Chemical Detection" Technical Digest, Proceedings of the 5th Solid State Sensor and Actuator Workshop, pp. 114–117 (1992).

Ozaki et al., "Infrared Spectroscopic Studies of Single–Monolayer Langmuir–Blodgett Films" Spectroscopy, 8(1): 37–44 (1993).

Sun et al., "Molecular Interactions between Organized, Surface–Confined Monolayers and Vapor–Phase Probe Molecules. 5. Acid–Base Interactions" Langmuir 9: 1775–1780 (1993).

Primary Examiner—Glenn A. Caldarola
Attorney, Agent, or Firm—Edna M. O'Connor

[57] **ABSTRACT**

The present invention relates to a gettering material that may be used as a filtration medium to remove pollutants from the environment. The gettering material comprises a high surface area material having a metal surface that chemically bonds n-alkanethiols in an organized manner thereby forming a molecular monolayer over the metal surface. The n-alkanethiols have a free functional group that interacts with the environment thereby binding specific pollutants that may be present. The gettering material may be exposed to streams of air in heating, ventilation, and air conditioning systems or streams of water to remove specific pollutants from either medium.

8 Claims, 7 Drawing Sheets

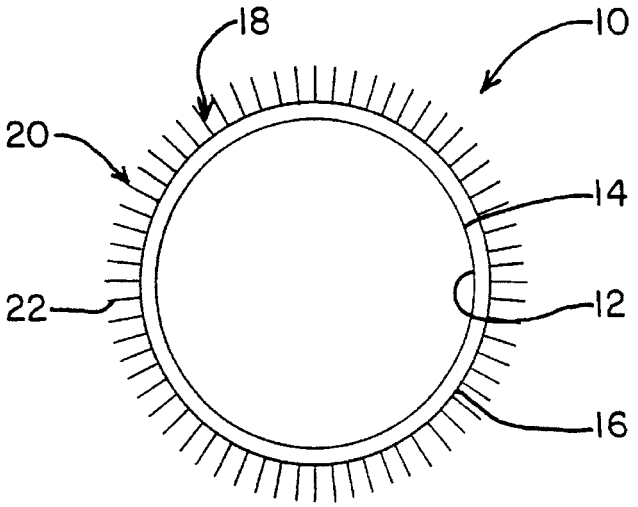

FIG. 1

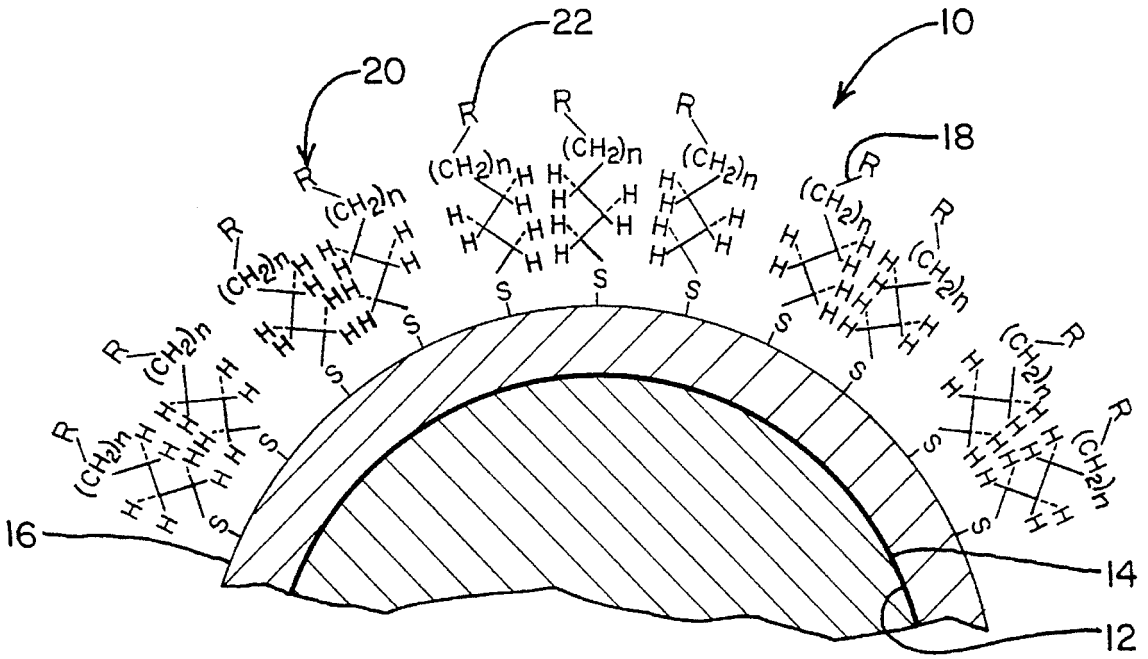

FIG. 1a

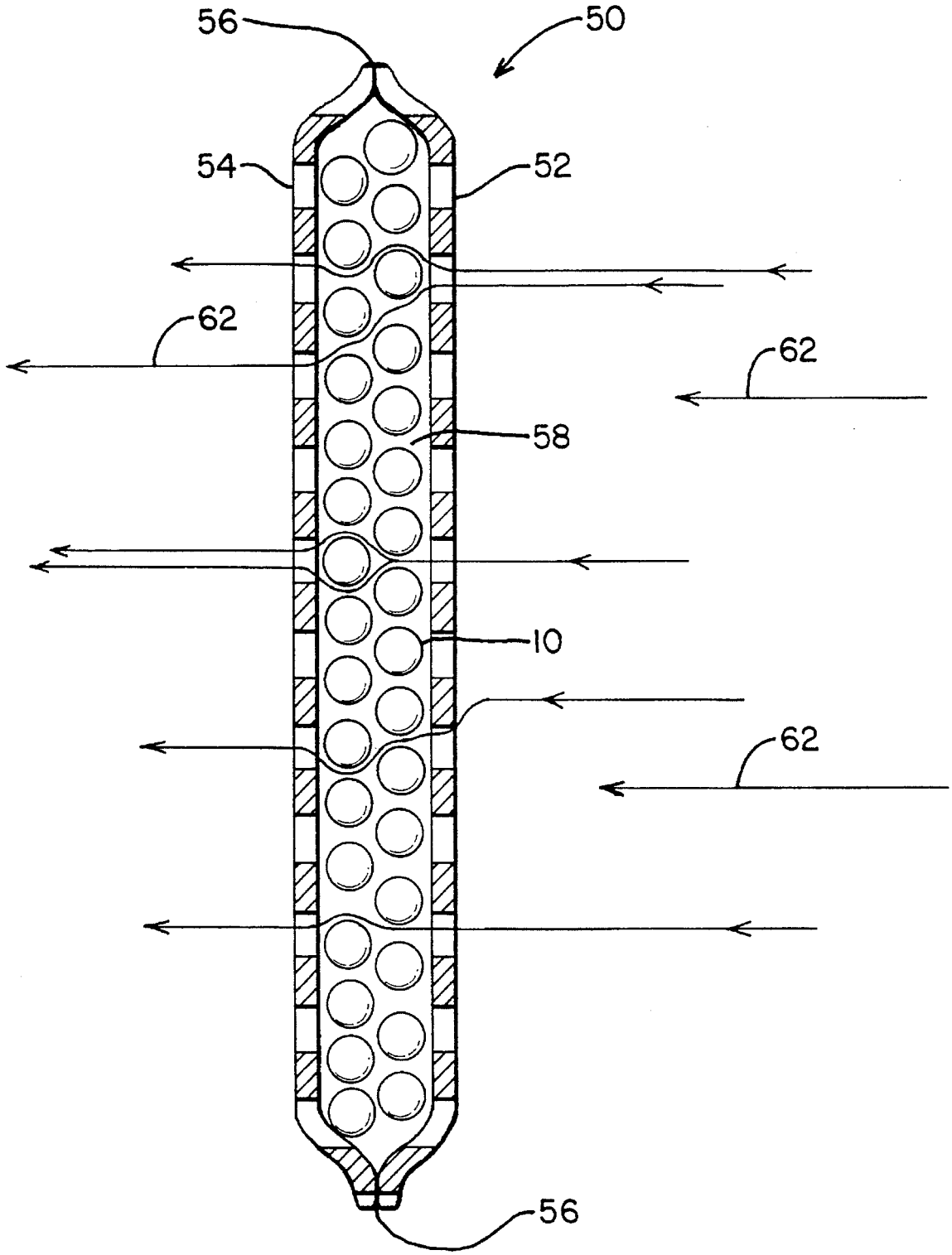

FIG. 2

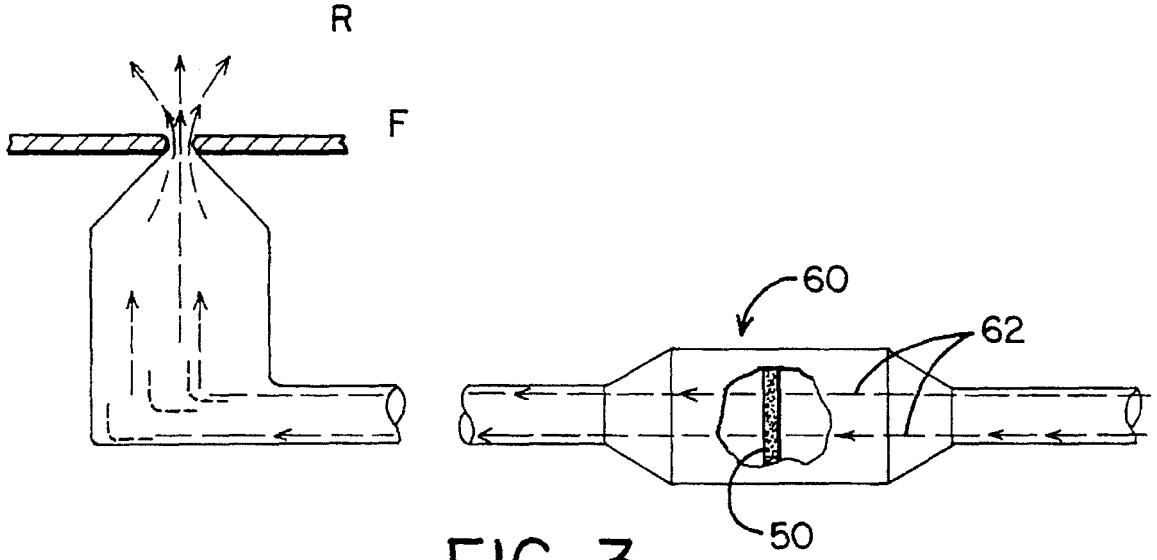

FIG. 3

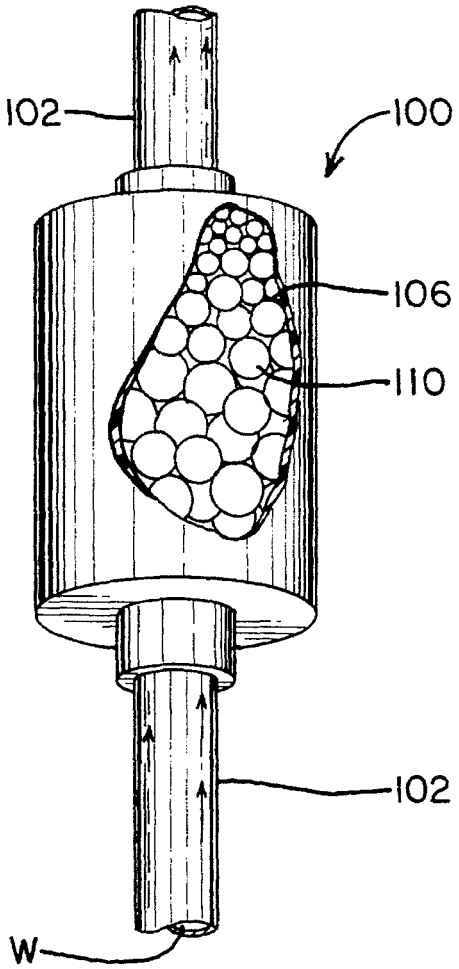

FIG. 4

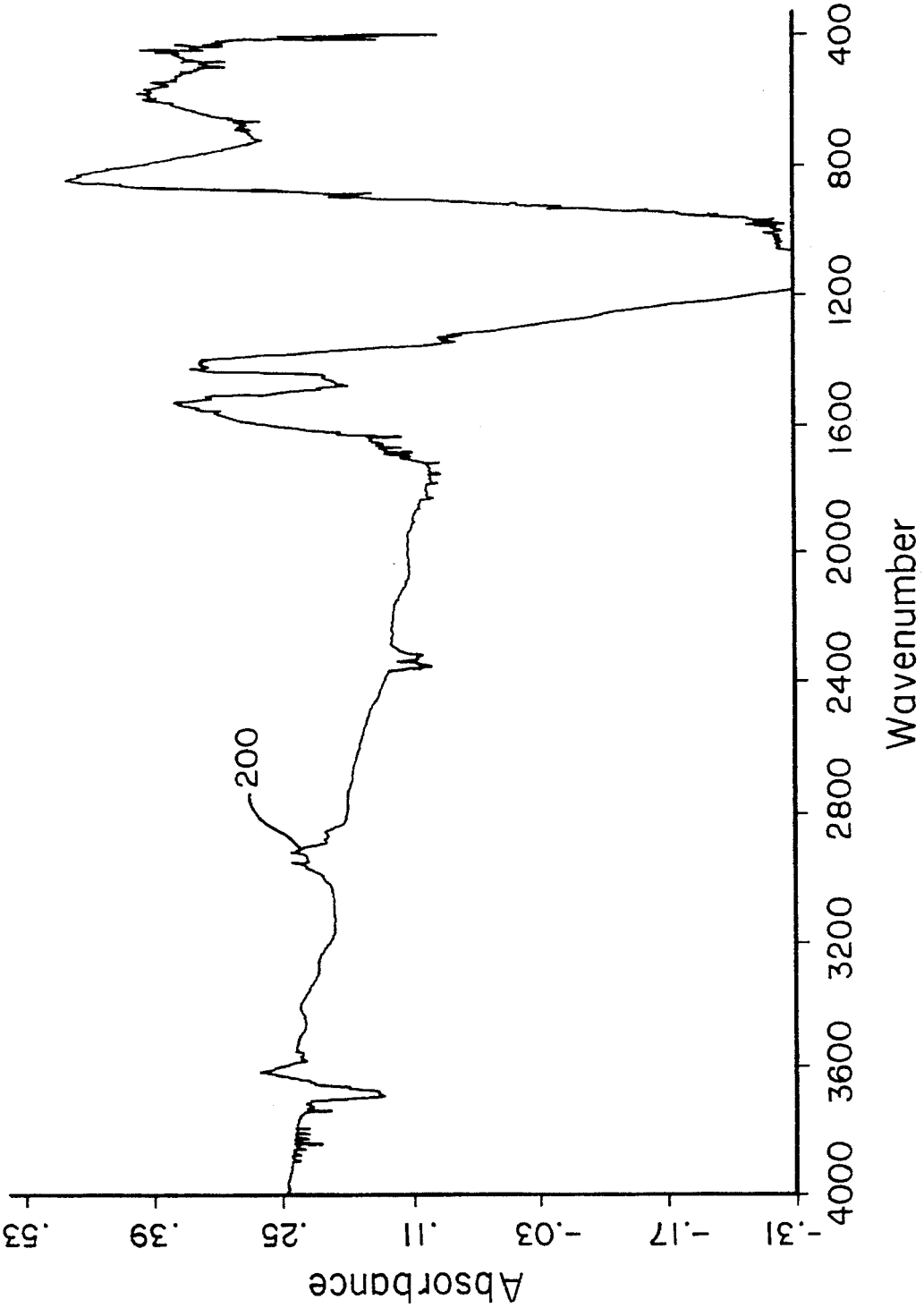
Absorbance
.53
.39
.25
.11
-.03
-.17
-.31
4000
3600
3200
2800
2400
2000
1600
1200
800
400
Wavenumber
200

FIG. 5

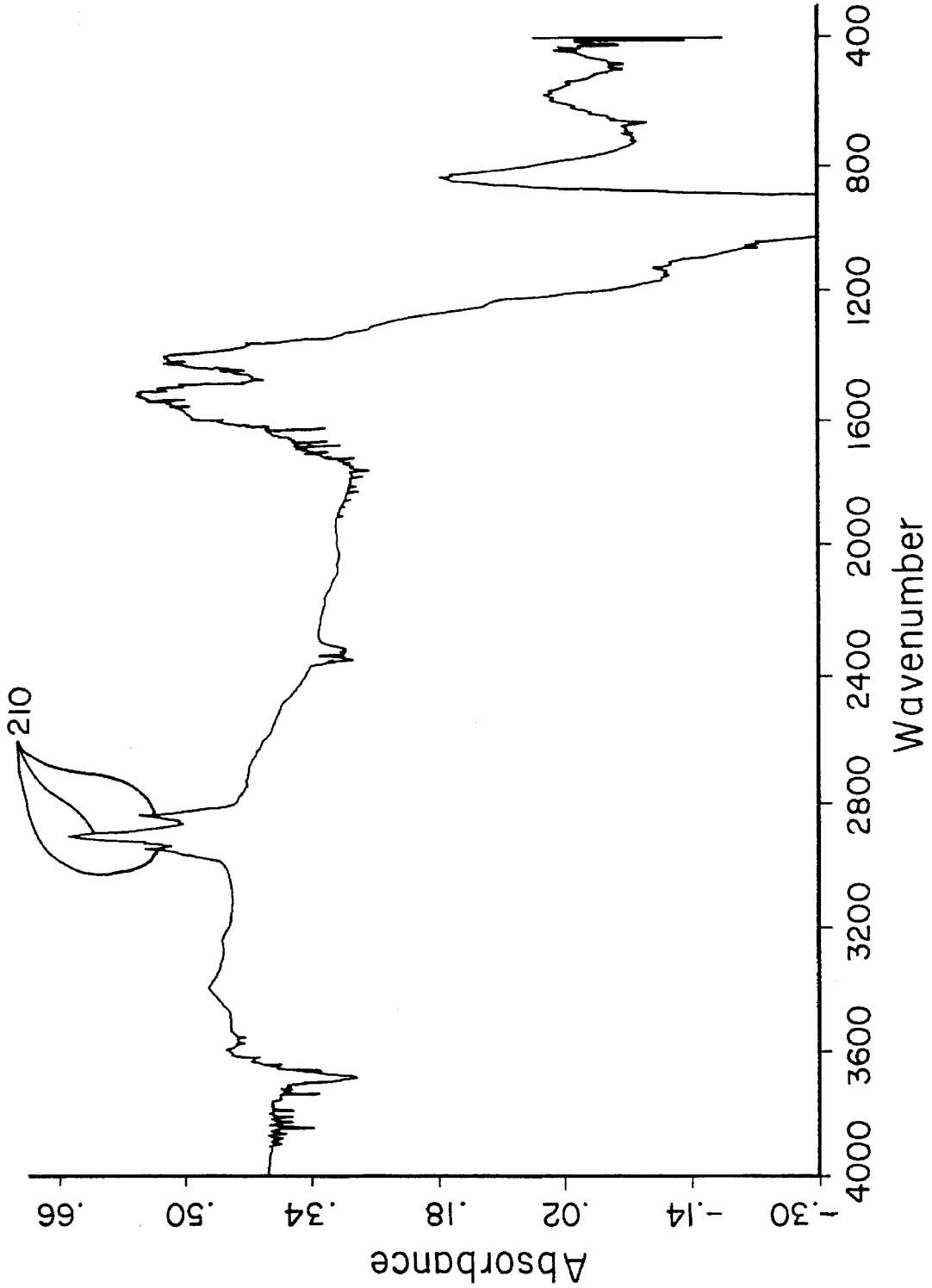
210
Absorbance
.66
.50
.34
.18
.02
-.14
-.30
4000
3600
3200
2800
2400
2000
1600
1200
800
400
Wavenumber

FIG. 6

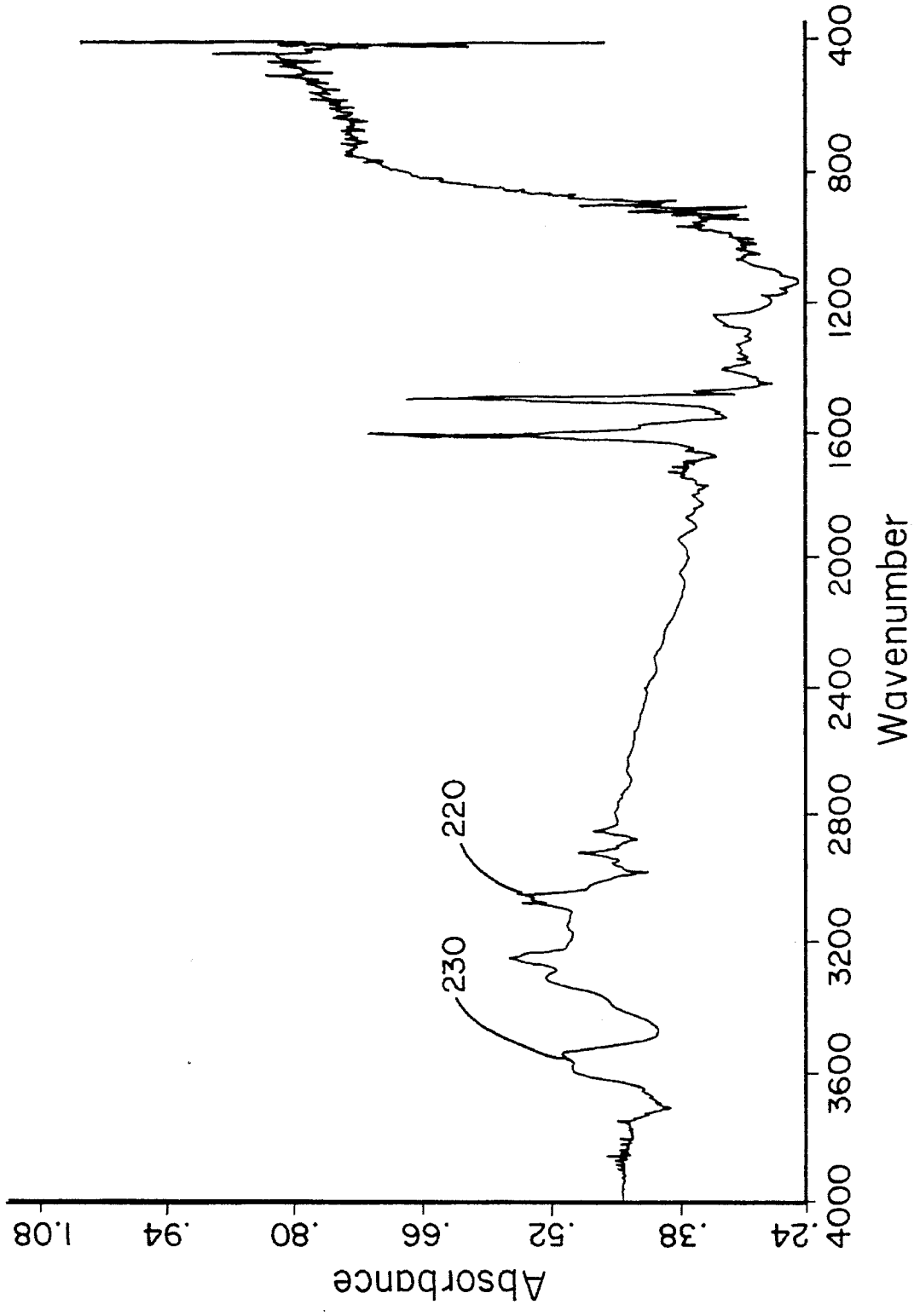
Absorbance
1.08
.94
.80
.66
.52
.38
.24
4000
3600
3200
2800
2400
2000
1600
1200
800
400
Wavenumber
230
220

FIG. 7

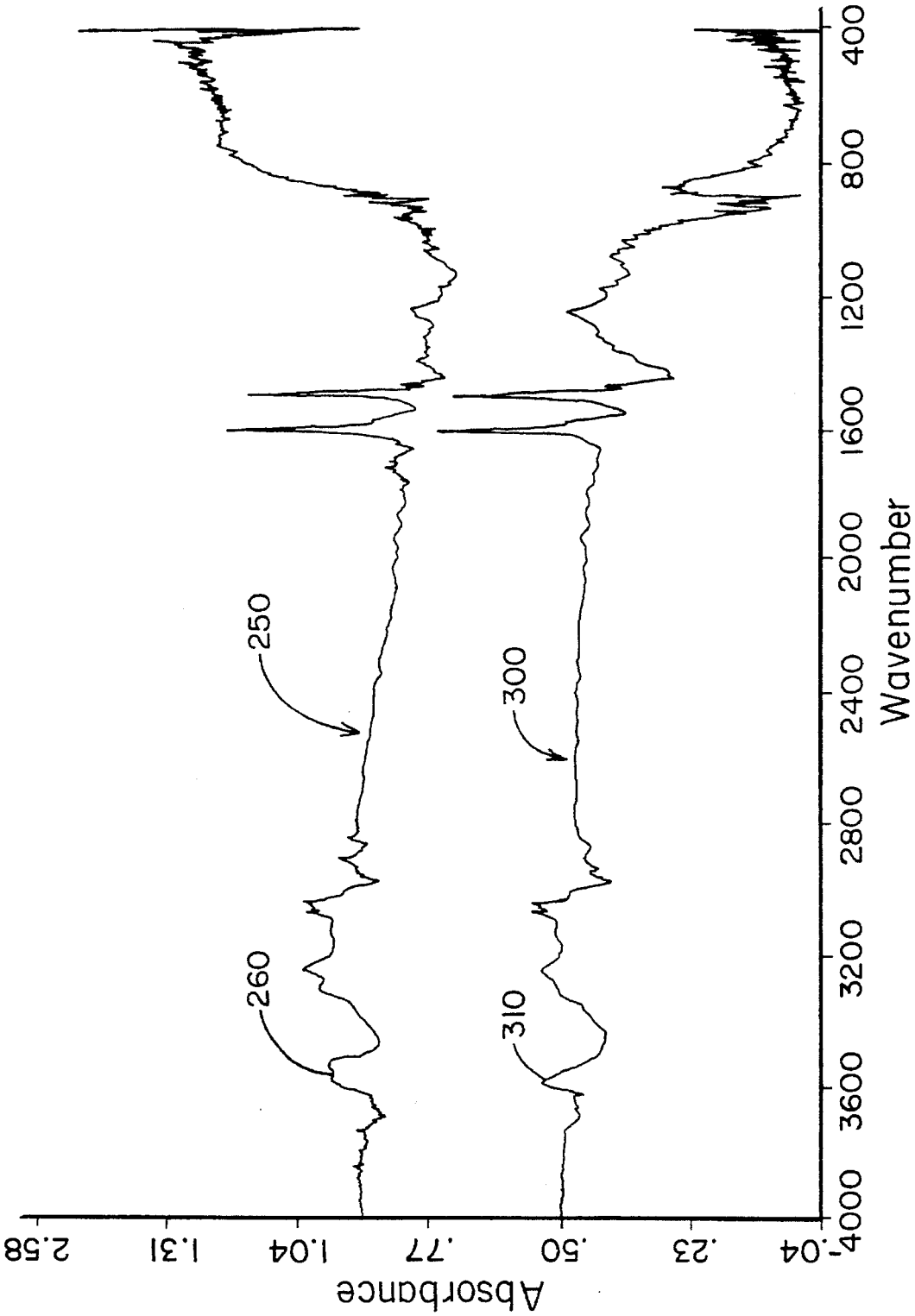
Absorbance
2.58
1.31
1.04
.77
.50
.23
-.04
4000
3600
3200
2800
2400
2000
1600
1200
800
400
Wavenumber
250
260
300
310

FIG. 8

SELF ASSEMBLED MOLECULAR MONOLAYERS ON HIGH SURFACE AREA MATERIALS AS MOLECULAR GETTERS

CONTRACTUAL ORIGIN OF THE INVENTION

The United States Government has rights in this invention under Contract No. DE-AC0283CH10093 between the U.S. Department of Energy and the National Renewable Energy Laboratory, a Division of Midwest Research Institute.

BACKGROUND OF THE INVENTION

1. Field of the Invention

The present invention relates generally to getters or filtration media for improved removal of pollutants from the environment and more particularly to high surface area materials having functional molecular monolayers assembled thereon.

2. Description of the Prior Art

Heating, ventilation, and air conditioning (HVAC) systems are installed in modern buildings to enhance comfort. Those systems not only provide warm or cool air, as needed to maintain room temperature within desired ranges, but also supply fresh air to dilute and replace ambient room air that becomes polluted by human habitation and other sources, such as chemical release from pressed woods, carpets, paint, copy machines, and the like. An increased awareness of chemical pollutants in the environment has resulted in the critical evaluation of air quality in commercial, residential, and industrial structures. Incidents of sick-building syndrome and reports of multiple chemical sensitivity (MCS) as result of exposure to common indoor air pollutants has resulted in action at the federal government level. Current standards of the American Society of Heating, Refrigerating and Air-Conditioning Engineers (ASHRAE) set in 1989 require a minimum fresh air ventilation rate of 7.1 liters/second/person (15 cfm/person) for general building and 9.4 liters/second/person (20 cfm/person) for office buildings.

Adequate exhausting of pollutants for a room or building is necessary and is accomplished by diluting the pollutants inside with fresh air from the outside, while drawing some air out of the room through a return duct. Increasing the air exchange rate results in a dramatic drop in the energy efficiency of buildings. This is reflected in increased energy demands and thus operating costs. Consequently, it is necessary to achieve a greater degree of removal and isolation of chemical pollutants without resorting to large air volume exchanges that involve increased energy demands and high operating costs.

Positioning a filtration device directly in the path of the air flow prior to introducing or injecting air into a room through a duct outlet has been found to be a reasonably effective way to achieve the removal of pollutants. However, there is still a need for substantial further improvement.

There have been some apparatus and methods developed for the removal of pollutants from both, moving streams of air and water. For example, the standard state-of-the-art filtration medium is high surface area (HSA) activated carbon. Many different types of activated carbons with varied internal pore sizes, surface areas, and active surface sites are commercially available. Activated carbons are extensively used to remove a variety of pollutants from both air and water systems, as discussed by Adamson, *Physical Chemistry of Surfaces*, Wiley, 1982. However as discussed by Ramanathan, *Proceedings of the ASHRE/SOEH Conferences* IAQ89, p. 33, April 1989, a disadvantage of activated carbon is that although it is capable of reducing high concentrations of many common indoor pollutants it becomes increasingly ineffective as the concentration of the pollutant drops. Even with surface areas exceeding 1000 m_2/g, activated carbon tends to show very early breakthrough behavior in normal size filter beds requiring many air passes to retain its effectiveness. If improvements were made at the molecular level of filtration media, for trapping pollutants present at low levels, indoor air quality would be vastly improved while maintaining the energy efficiency of the building.

SUMMARY OF THE INVENTION

Accordingly, it is a general object of this invention to provide a highly sensitive gettering material.

A more specific object of the present invention is to introduce the gettering material of the present invention into an air or water stream thus filtering out pollutants.

Additional objects, advantages, and novel features of the invention shall be set forth in part in the description that follows, and in part will become apparent to those skilled in the art upon examination of the following or may be learned by the practice of the invention. The objects and the advantages may be realized and attained by means of the instrumentalities and in combinations particularly pointed out in the appended claims.

To achieve the foregoing and other objects and in accordance with the purposes of the present invention, as embodied and broadly described therein, the composition of this invention may comprise forming an organized molecular monolayer over the surface of a material having a high surface area, wherein the organized molecular monolayer is comprised of long chain organic molecules having functional groups at both ends.

BRIEF DESCRIPTION OF THE DRAWINGS

The accompanying drawings, which are incorporated in and form a part of the specifications, illustrate the preferred embodiments of the present invention, and together with the descriptions serve to explain the principles of the invention. In the Drawings:

FIG. **1** is an illustration of a metal coated particle having a monolayer of an n-alkanethiol formed thereon.

FIG. **1***a* is a cross-sectional schematic representation at the molecular level of the material shown in FIG. **1**.

FIG. **2** is a cross-sectional view of a filtration device constructed with the gettering material of the present invention held within a wire mesh.

FIG. **3** is a schematic representation of an air filtration system of the present invention in side elevation view as installed in a ventilation duct.

FIG. **4** is a perspective view of a water filtration system of the present invention installed in a water pipe.

FIG. **5** is a FTIR spectrum of a silver coated titania substrate.

FIG. **6** is an FTIR spectrum of a silver coated titania substrate having an n-alkanethiol formed thereon.

FIG. **7** is an FTIR spectrum of a silver coated titania substrate having an n-alkanethiol formed thereon exposed to aniline.

FIG. **8** is the FTIR spectrum of FIG. **7** compared to an FTIR spectrum of a silver coated titania substrate exposed to aniline.

DETAILED DESCRIPTION OF THE PREFERRED EMBODIMENTS

The getting material **10** according to the present invention is best seen in FIGS. **1** and 1*a*. The gettering material **10** is comprised of a high surface area material **12**, such as activated carbon, silica gel, titanium oxide, and other metal oxides in general, metal powders, zeolites and aerogels, having deposited on the surface **14** of material **12** a thin metal film **16** having an ordered crystalline lattice to which individual n-alkanethiols are adsorbed forming an organized molecular monolayer **18**. The surface **20** of molecular monolayer **18** is comprised of terminal functional groups **22** that are selected so they can react with and bind specific pollutants in air or liquid environments. In use, an air or liquid stream is flowed over the surface of gettering material **10** and pollutants found within the stream react with and are adsorbed to molecular monolayer **18**, thus being effectively removed from the stream.

A thin layer of chemically reduced metal, such as pure silver or gold, is precipitated onto a sensitized surface **14** of material **12**, such as a particle of titanium dioxide, thereby forming metal film **16** having a uniform thickness of about **3** angstroms. This may be accomplished by a common commercial process known as a wet chemical electroless process. Following the deposition of metal film **16**, material **12** is immersed in a solution of an n-alkanethiol for a few minutes to sixteen hours, preferably the solution is a 5 mM ethanolic solution of $SH(CH_2)_n$—R, n in the formula is an integer of preferably 5 or greater while R in the formula is a specific functional group that is chosen to react with a specific pollutant. Molecular monolayer **18** forms spontaneously on the metal surface **14**. The sulfur group of the n-alkanethiol chemically bonds to the surface **14** forming a very dense, impermeable, molecular monolayer **18**. A cross-sectional schematic representation of the gettering material **10** at the molecular level is shown in FIG. 1*a*.

From the energetics point of view, a self-assembling n-alkanethiol or surfactant molecule can be divided into three parts. The first part is the head group or in the present invention an SH group that provides the most exothermic process, i.e. chemisorption on the metal surface **14**. The very strong molecular-substrate interactions result in an apparent pinning of the chemical bond. This can be a covalent Ag—S bond in the case of alkanethiols on silver; or a covalent, but slightly polar, Au—S bond in the case of alkanethiols on gold. As a result of the exothermic head group-substrate interactions, molecules try to occupy every available binding site on the surface of the metal, and in this process they push together molecules that have already adsorbed. It is this spontaneous molecular adsorption that brings molecules close enough together and allows for the short-range dispersive, London-type, Van der Waals forces to become important. The second molecular part is the alkyl chain, and the energies associated with its interchain Van der Waals interactions are at the order of a few (<10) kcal/mol (exothermic). It is clear, however, that while interchain interactions are important, the first and most important process is chemisorption. The third molecular part is the terminal functional group, which is chosen to interact with specific contaminants.

Following the formation of molecular monolayer **18** the gettering material **10** is rinsed with ethanol to remove the residual n-alkanethiol solution and dried.

In use, a filtration **50** device or filter, as shown in FIG. **2**, is assembled wherein said filter **50** comprises two permeable outer sheets or walls **52**, **54** positioned in parallel relation to each other. The seams around the edges of the filter **50** where the two permeable outer sheets or walls **52**, **54** meet are sealed, preferably by welding, as shown at **56**. The interior chamber **58** enclosed by the outer sheets or walls **52**, **54** is filled with gettering material **10** prior to being completely sealed. Filter **50** is then inserted into an air delivery duct **60** as shown in FIG. **3**. Pollutants contained in air stream **62**, which is being delivered into an enclosure, such as a room R in a building are removed as air stream **62** passes through filter **50**.

In a second embodiment (not shown) expanded metal carbon and metal plated ceramic foams purchased from Energy Research and Generation, Inc., Oakland, Calif., may be directly immersed in a 5 mM ethanolic solution of an n-alkanethiol such as 11-mercaptoundecanoic acid thereby forming a molecular monolayer over the surface of the expanded metal. Following the formation of the molecular monolayer the gettering material is rinsed with ethanol to remove the residual n-alkanethiol solution and dried. The gettering material may then be placed directly within a duct as discussed in the preferred embodiment.

In a third embodiment, shown in FIG. **4**, a filtration bed **100** may be prepared and inserted within a water pipe **102**. Water W flowing through filtration bed **100** will come in contact with the functional groups (not shown) that comprise the active surface **106** of the molecular monolayer (not shown) of gettering material **110**. Any pollutants within the water W that the functional groups have been designed to react with will be tightly adsorbed and thus removed from the water W.

EXAMPLES

The following example demonstrates the efficacy of using a molecular monolayer, formed over a high surface area material, having the general formula SH—$(CH_2)_n$—R wherein n is an integer of 5 or greater, and R is a functional group, as a gettering device for pollutants in air and liquid streams.

X-ray photoelectron spectroscopy (XPS) analysis was conducted with Mg x-radiation, at a power of 240 watts (12 KV, 20 mA) using a Leybold-Heraeus surface analytical system model number (LHS-10) manufactured by Leybold-Heraeus, Cologne, Germany. The base pressure of the sample chamber during analysis was typically 2×10^{-8} torr. Fourier Transform Infrared (FTIR) analysis were conducted on powder samples of titania in a DR-FTIR (Diffuse Reflectance FTIR) attachment, model number DRA-N06 manufactured by Harrick Company, in the Nicolet model 800 FTIR spectrometer manufactured by Nicolet Analytical Instruments, Madison Wisconsin. The DR technique is specialized for bulk powder samples.

Small 1–5 micron spherical particles of titanium dioxide having a surface area of $10m^2/g$ (Aldrich Chemical Co.) were silvered by direct reduction of silver nitrate on the titania surface. The silver content of the material was 0.3% by weight by Flame Atomic Absorption analysis. Assuming a complete and uniform coverage, this corresponds to 3 Angstroms of silver on the surface of the titania, or about **1** monolayer. However, it is more likely that less of the entire surface area is covered by more than this thickness. A sample (about 2.5 g) of this material was incubated with a 5 mM ethanolic solution of 11-mercaptoundecanoic acid,

[$SH(CH_2)_{10}COOH$], (MUA) for 10 hours for self assembly of a molecular monolayer.

The point of attachment to the silver surface of this long chain molecule is the thiol (SH) functional group, which leaves the COOH, (acid) group as the surface functional group. The resulting MUA/Ag/TiO_2 material was centrifuged with two volumes of fresh ethanol three times to assure complete removal of any unassembled MUA. The MUA/Ag/TiO_2 material was resuspended in fresh ethanol and sonicated prior to each centrifugation. The MUA/Ag/TiO_2 material was stored damp with ethanol and dried immediately before use under dry air. The resulting x-ray photoelectron spectroscopy (XPS) and Fourier Transform Infrared (FTIR) analysis show the presence of the acid molecules at a level consistent with a monolayer assembly.

I. Analysis of Gettering Material Prior to Exposure to a Pollutant

XPS Analysis:

Quantitative XPS data, shown below in Table 1, follows the surface atomic percent composition before and after assembly of the MUA molecular monolayer onto silver supported on titania.

TABLE I

Element	Ag/TiO_2	MUA/Ag/TiO_2	Difference
Sulfur	—	1.9	+1.9
Carbon	81.1	84.7	+3.6
Silver	2.1	1.1	−1.0
Titanium	3	2.3	−0.7
Oxygen	13.8	10.0	−3.8

The loss in silver XPS intensity, nearly 50%, after the assembly of the molecular monolayer onto the silver loaded high surface area material indicates that the majority of the MUA has assembled specifically onto the exposed silver surface. The small increase in surface carbon concentration and the appearance of a sulfur peak indicates the assembly of a MUA monolayer film on the exposed silver surface of the modified high surface area material. This is consistent with the known chemistry of thiols assembling onto smooth silver surfaces.

FTIR Analysis:

Analysis with DR-FTIR of the silver coated titania shows that there is initially some hydrocarbon, represented by peaks 200 above 2900 cm^{-1} shown in FIG. **5**, present on the silver coated titania, as expected from atmospheric exposure. Subsequent to incubating the silver coated titania with MUA, the hydrocarbon peaks **210** of spectrum **215** changes and increases in intensity as shown in FIG. **6**. Peak positions in a system such as this have not been defined, however the peak intensities and positions are consistent with values for molecular monolayers assembled on smooth silver surfaces.

II. Analysis of Material Gettering Exposed to a Pollutant

XPS Analysis:

The high surface area gettering material of the present invention was exposed to approximately 30 ppm (parts per million) of aniline (an aromatic primary amine) vapor in the high-pressure cell of the LHS 10 system (in a very clean and controlled environment), at about 1×10^{-2} torr of aniline, in the presence of water vapor. The LHS 10 system allows XPS analysis of the sample prior to aniline exposure and subsequent analysis of the exposed sample without bringing the sample into the room atmosphere or contact with any other unchoosen gas or vapor set. After aniline exposure the sample was allowed to sit under dynamic vacuum conditions in the analysis chamber until the base pressure was in the low 10^{-8} torr region. Any aniline that was physisorbed rather than chemisorbed would be expected to be rapidly pumped away under these conditions.

Table II, below, provides quantitative XPS data of the surface atomic percent composition before and after exposure of the MUA molecular monolayer assembled on silver supported on titania to aniline.

TABLE II

ELEMENT	MUA/AG/TiO_2	Aniline Exposed	Differences
Carbon	84.7	86.0	+1.3
Silver	1.1	1.2	−0.1
Titanium	2.3	1.8	−0.5
Oxygen	10.0	8.6	−1.4
Nitrogen	—	2.5	+2.5

The aniline exposure resulted in a further increase in the carbon content on the surface of the MUA/Ag/TiO_2 material. The low concentration of surface nitrogen, 2.5%, suggests that the acid group has reacted with (chemisorbed) the aniline (a basic amine). The surface element atomic compositions are calculated from the entire XPS analysis sampling depth of nearly 50 angstroms. Since the aniline resides only on the surface (under **10** angstroms, assuming no more than a monolayer of aniline) this 2.5% is an appreciable coverage. The sulfur atomic composition, as discussed above in Table I, of the unexposed gettering material is about 2%. This is very close to the value of 2.5% surface nitrogen that was determined from the aniline exposed sample. Since there is one sulfur atom and one acid group per MUA chain, this one to one correspondence is consistent with each surface COOH site occupied by an aniline molecule.

FTIR Analysis:

A sample of the MUA/Ag/TiO_2 material was exposed to aniline vapor, at about 30 ppm, in a closed 250 ml flask, without contacting the liquid, for 23 hours at room temperature. Two microliters of aniline were introduced into the bottom of the flask, with the MUA/Ag/TiO_2 supported on a glass fritted filter in the flask. The exposed MUA/Ag/TiO_2 material was analyzed with DR-FTIR. The FTIR spectrum, shown in FIG. **7**, was collected after 2 hours of dry air purge in the FTIR chamber. As shown in FIG. **7**, the aromatic CH features, represented by peaks **220**, at 3000 $cm^{31\ 1}$ are clearly visible in the aniline exposed sample, and a new peak **230** appears at about 3550 cm^{-1} indicates the presence of the carboxyl salt of aniline and the surface bound MUA molecules. This is indicative of the MUA surface COOH groups with aniline. A control experiment using silver coated titania, after being exposed to aniline vapor, as above, for 72 hours, displayed a spectrum **300** having a peak **310** at about 3600 cm^{-1} consistent with a physisorbed aniline, as shown in FIG. **8**. The spectrum of the MUA system **250** also shown in FIG. **8**, clearly shows a different peak **260** for the chemisorbed carboxyl aniline salt (NH^{3+}) at about 3550 cm^{-1}. The infrared absorbance intensity of the chemisorbed aniline is far less for the physisorbed species, and is consistent with the presence of a monolayer of aniline bonded to the MUA/Ag/TiO_2 material.

The XPS and FTIR data are consistent with the formation of an ordered molecular monolayer on the surface of silver (metal) coated titania, and the subsequent reaction with an amine pollutant molecule, aniline.

The embodiments of the invention in which an exclusive property or privilege is claimed are defined as follows:

1. A filter for the removal of pollutants from a specific environment comprising:

a substrate having a metal surface; and

a molecular monolayer formed on said metal surface; wherein said molecular monolayer comprises a compound having the general formula $SH(CH_2)_n$–R, wherein n is an integer of 5 or greater and R is a specific functional group that is chosen to react with a specific pollutant, and a permeable container to hold said substrate having said molecular monolayer formed on said surface.

2. The filter of claim 1, wherein said functional group is carboxylic acid.

3. The filter of claim 1, wherein said metal surface is deposited onto the substrate.

4. A filter for removal of pollutants from a specific environment comprising:

a substrate having a metal surface; and

a molecular monolayer formed on said metal surface; wherein said molecular monolayer comprises a compound having the general formula $SH(CH_2)_n$—R, wherein n is an integer of 5 greater and R is a specific functional group that is chosen to react with a specific pollutant, wherein said metal surface is deposited onto the substrate and said substrate is activated charcoal.

5. The filter of claim 3, wherein said metal is silver.

6. A filter for the removal of pollutants from a specific environment comprising:

a substrate having a metal surface wherein said substrate is a metal powder;

a molecular monolayer formed on said metal surface; wherein said molecular monolayer comprises a compound having the general formula $SH(CH_2)_n$—R, wherein n is an integer of 5 or greater and R is a specific functional group that is chosen to react with a specific pollutant.

7. A filter for the removal of pollutants from a specific environment comprising:

a substrate having a metal surface wherein said substrate is a metal oxide;

a molecular monolayer formed on said metal surface; wherein said molecular monolayer comprises a compound having the general formula $SH(CH_2)_n$—R, wherein n is an integer of 5 or greater and R is a specific functional group that is chosen to react with a specific pollutant.

8. The filter claim 7, wherein said metal oxide is titanium oxide.

* * * * *