US005562154A

United States Patent [19]

Benson et al.

[11] **Patent Number: 5,562,154**

[45] **Date of Patent: Oct. 8, 1996**

[54] **MATERIAL-CONTROLLED DYNAMIC VACUUM INSULATION**

[76] Inventors: **David K. Benson**, 14154 W. First Dr., Golden, Colo. 80401; **Thomas F. Potter**, 515 S. Magnolia La., Denver, Colo. 80224

[21] Appl. No.: **194,932**

[22] Filed: **Feb. 14, 1994**

Related U.S. Application Data

[60] Division of Ser. No. 960,885, Oct. 14, 1992, which is a continuation-in-part of Ser. No. 856,840, Mar. 14, 1992, Pat. No. 5,175,975, which is a continuation-in-part of Ser. No. 181,926, Apr. 15, 1988, abandoned, and a continuation-in-part of Ser. No. 535,782, Jun. 12, 1990, Pat. No. 5,157,893, which is a continuation-in-part of Ser. No. 181,926, Apr. 15, 1988, abandoned.

[51] **Int. Cl.**[6] **F28F 27/00**

[52] **U.S. Cl.** **165/96**; 165/276; 52/788.1

[58] **Field of Search** 165/96, 32; 52/791

[56] **References Cited**

U.S. PATENT DOCUMENTS

3,167,159	1/1965	Bovenkerk	189/34
3,424,622	1/1969	Dechert	136/161
3,450,196	6/1969	Bauer	165/32
3,578,068	5/1971	Elliot et al.	165/39
3,823,305	7/1974	Schroder	165/96
3,968,831	7/1976	Xenophou	165/1
4,224,980	9/1980	Buchner	165/32
4,235,956	11/1980	Gross et al.	429/112
4,304,294	12/1981	Reisman et al.	165/32
4,683,154	7/1987	Benison et al.	52/171
4,770,004	9/1988	Lagodmos	62/383

Primary Examiner—A. Michael Chambers

[57] **ABSTRACT**

A compact vacuum insulation panel comprising a chamber enclosed by two sheets of metal, glass-like spaces disposed in the chamber between the sidewalls, and a high-grade vacuum in the chamber includes apparatus and methods for enabling and disabling, or turning "on" and "off" the thermal insulating capability of the panel. One type of enabling and disabling apparatus and method includes a metal hydride for releasing hydrogen gas into the chamber in response to heat, and a hydrogen grate between the metal hydride and the chamber for selectively preventing and allowing return of the hydrogen gas to the metal hydride. Another type of enabling and disabling apparatus and method includes a variable emissivity coating on the sheets of metal in which the emissivity is controllably variable by heat or electricity. Still another type of enabling and disabling apparatus and method includes metal-to-metal contact devices that can be actuated to establish or break metal-to-metal heat paths or thermal short circuits between the metal sidewalls.

18 Claims, 13 Drawing Sheets

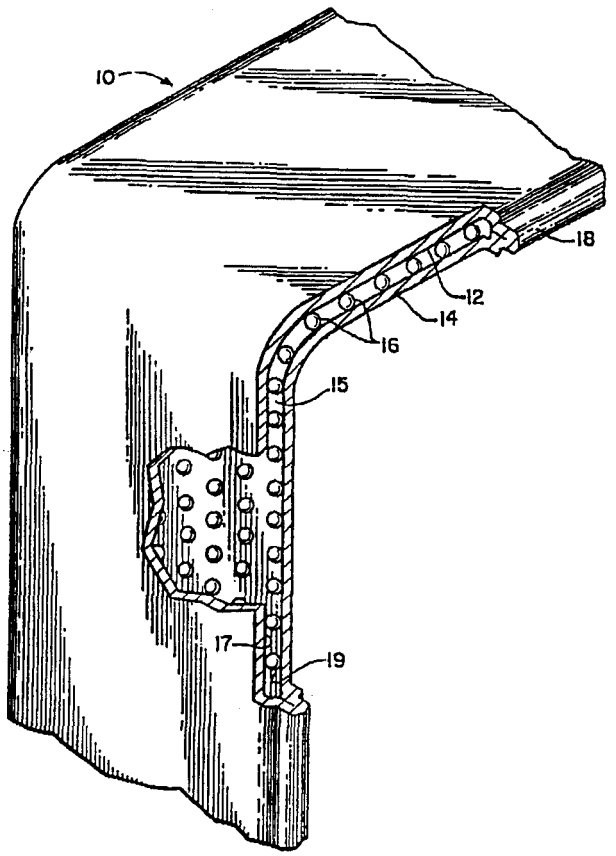

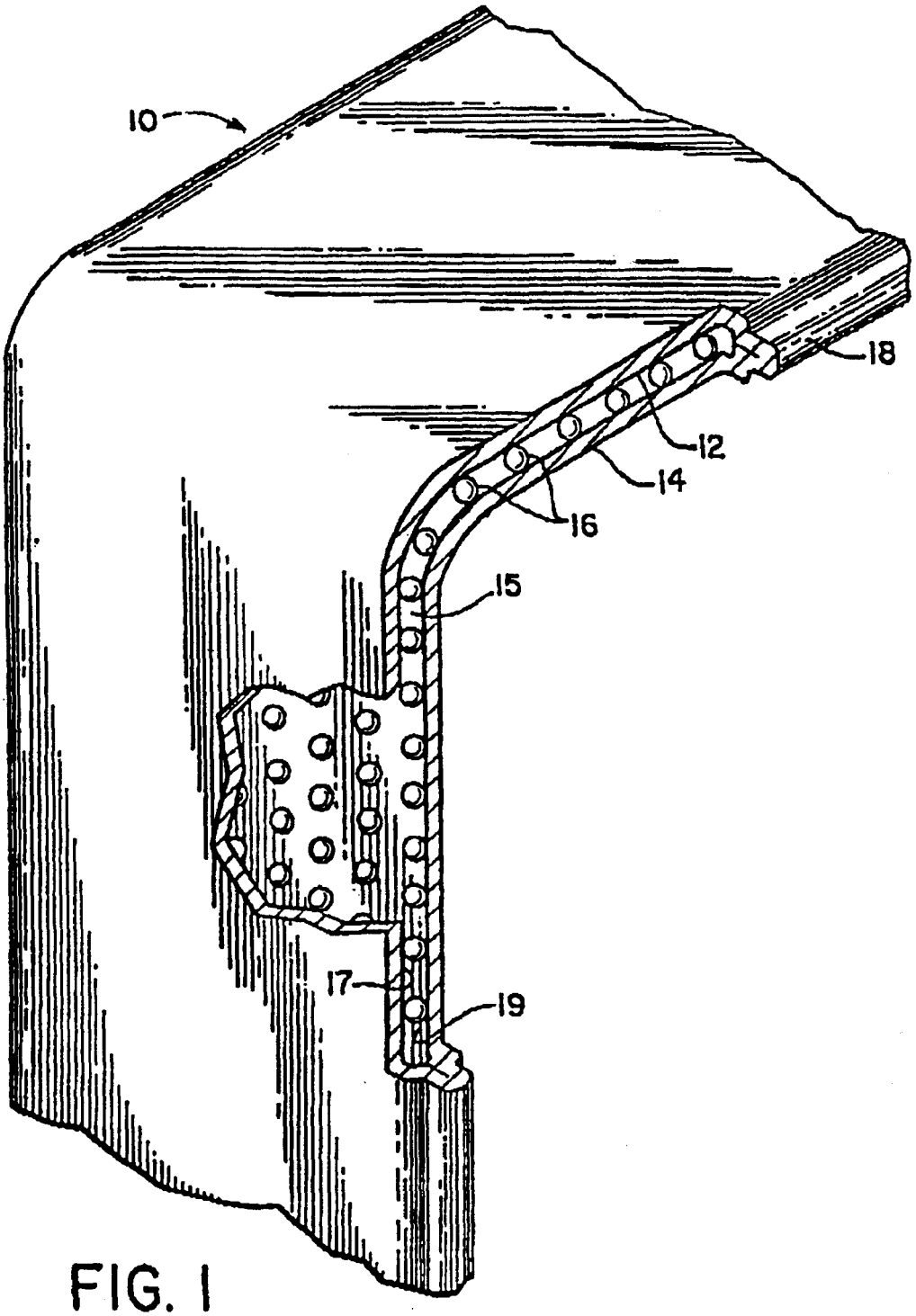

FIG. 1

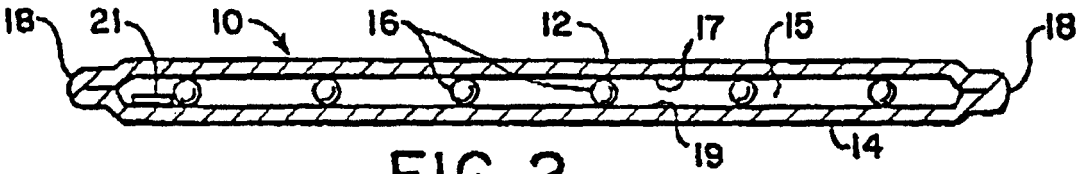

FIG. 2

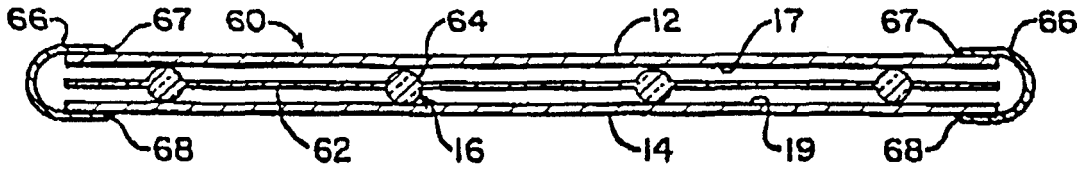
66
67
60
64
12
17
67
66
68
62
16
14
19
68

FIG. 3

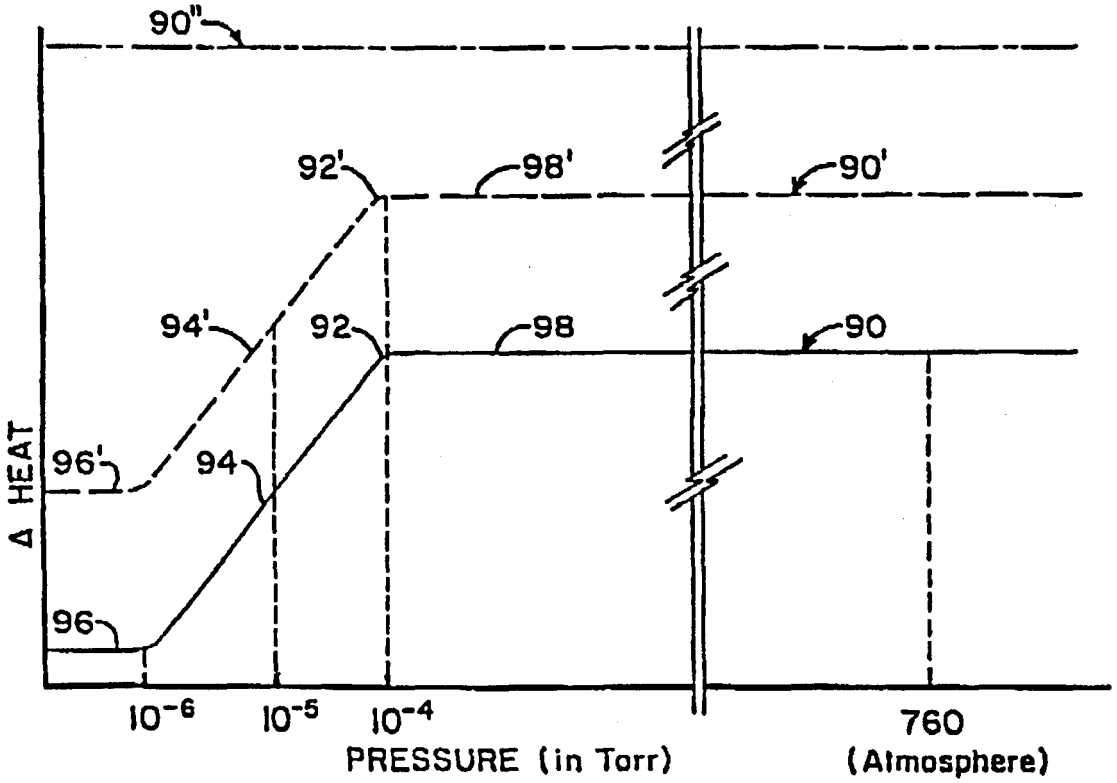
90"
92'
98'
90'
94'
92
98
90
96'
94
Δ HEAT
96
10^{-6}
10^{-5}
10^{-4}
PRESSURE (in Torr)
760
(Atmosphere)

FIG. 4

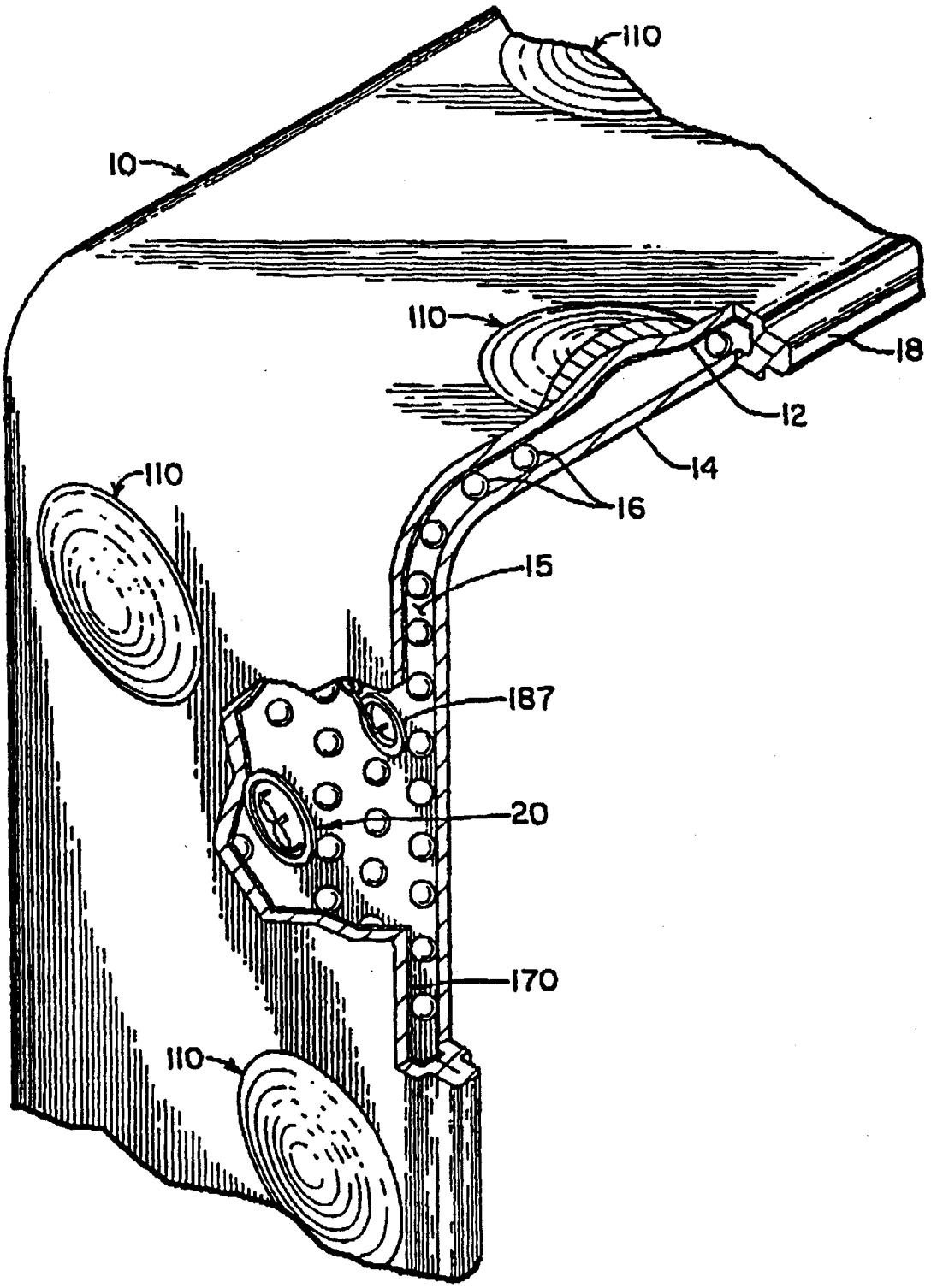

FIG. 5

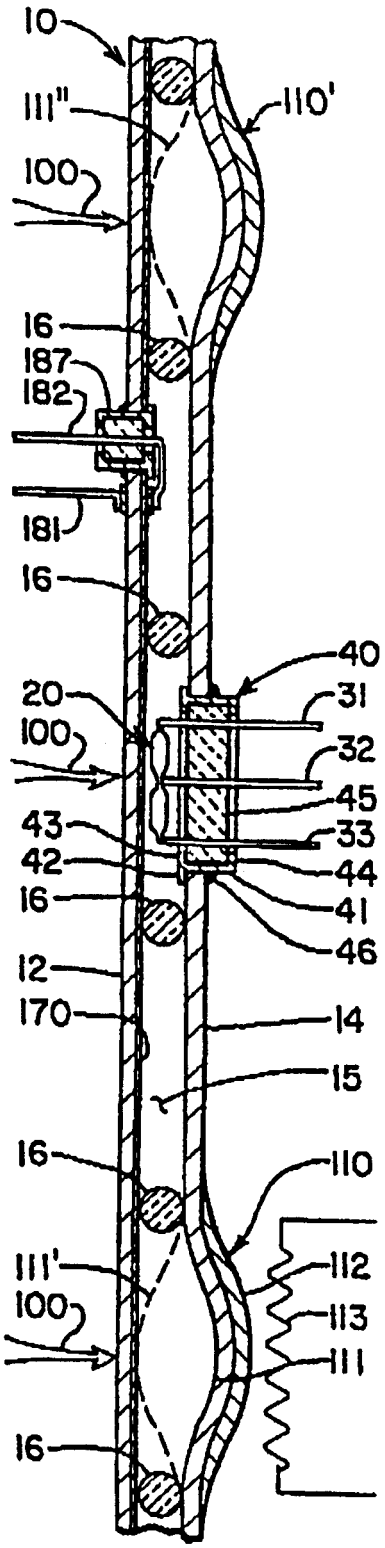
10
111"
110'
100
16
187
182
181
16
40
20
31
100
32
45
43
33
42
44
16
41
46
12
170
14
15
16
110
111'
112
100
113
111
16

FIG. 6

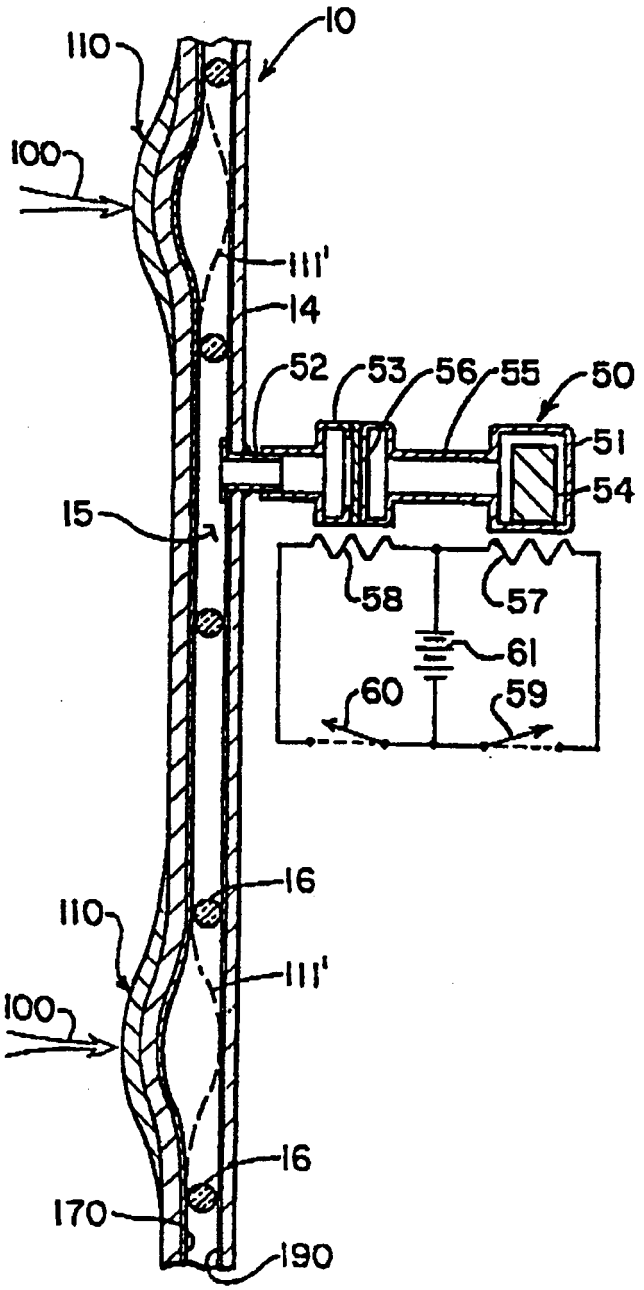
10
110
100
111'
14
52
53
56
55
50
51
54
15
58
57
61
60
59
16
110
111'
100
16
170
190

FIG. 12

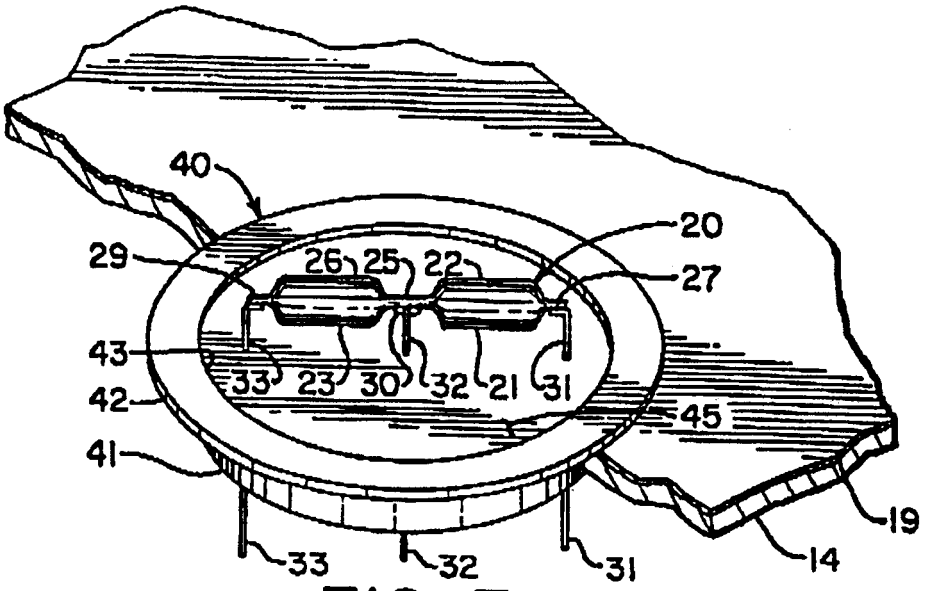

FIG. 7

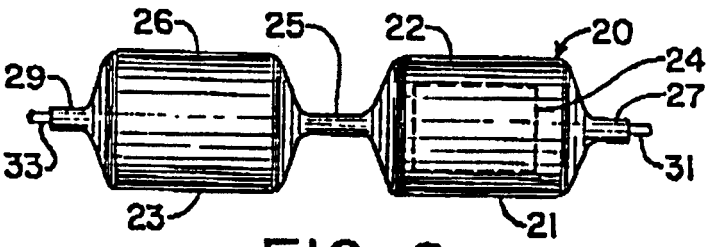

FIG. 8

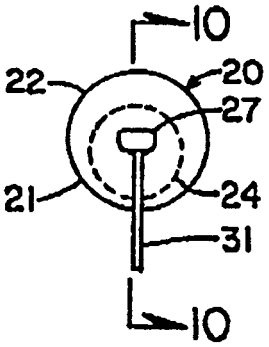

FIG. 9

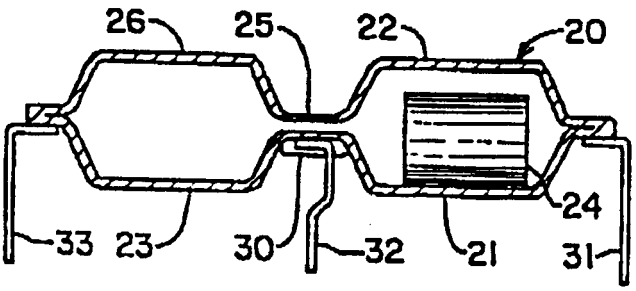

FIG. 10

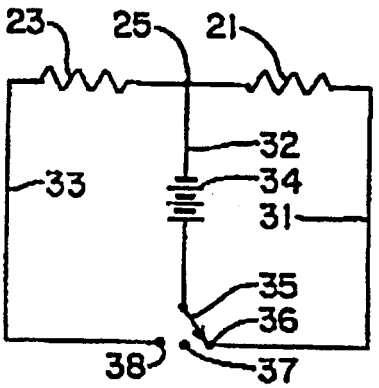

FIG. 11

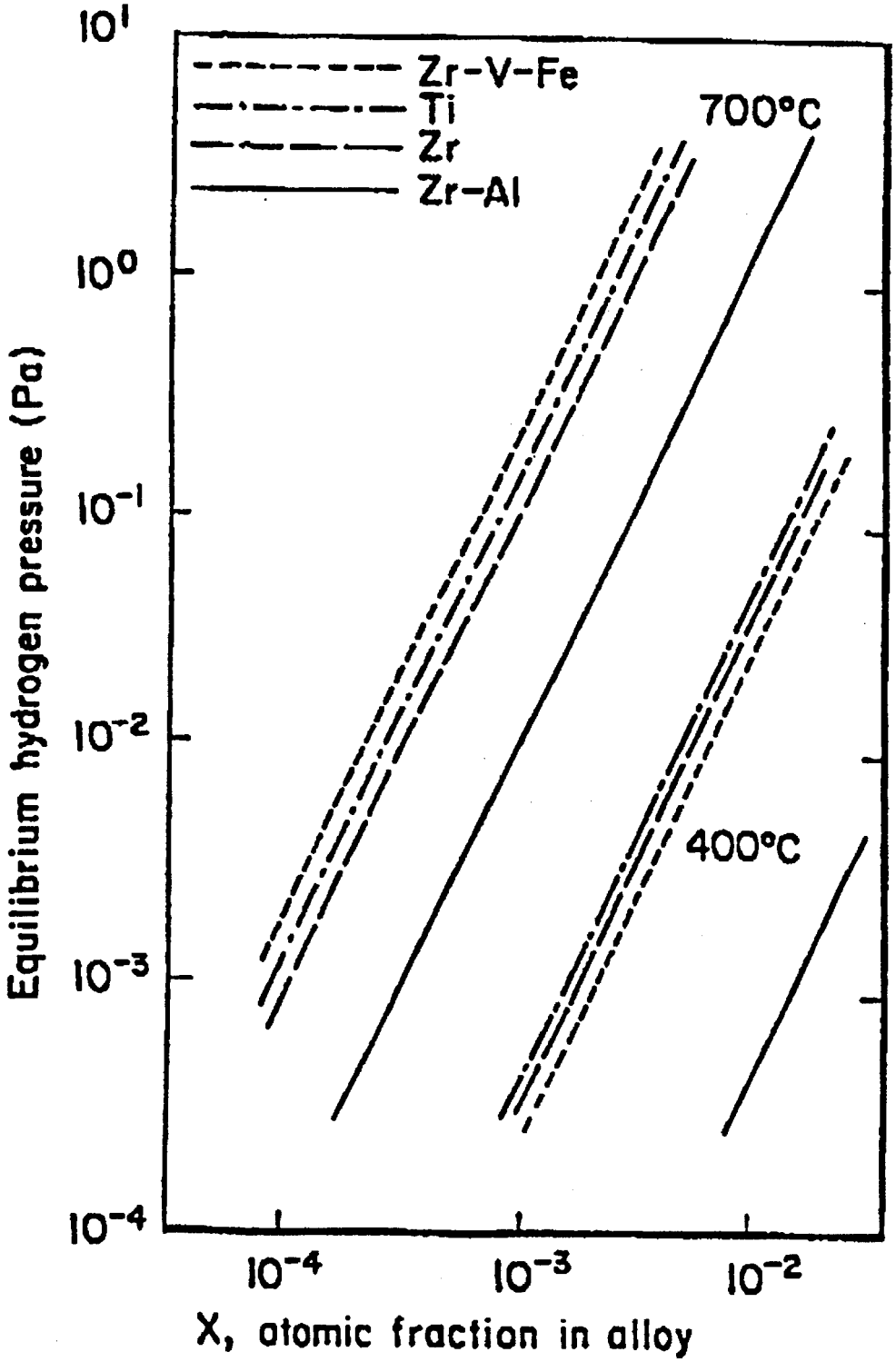
Zr-V-Fe
Ti
Zr
Zr-Al
700°C
400°C
Equilibrium hydrogen pressure (Pa)
10^1
10^0
10^{-1}
10^{-2}
10^{-3}
10^{-4}
10^{-4}
10^{-3}
10^{-2}
X, atomic fraction in alloy

FIG. 1

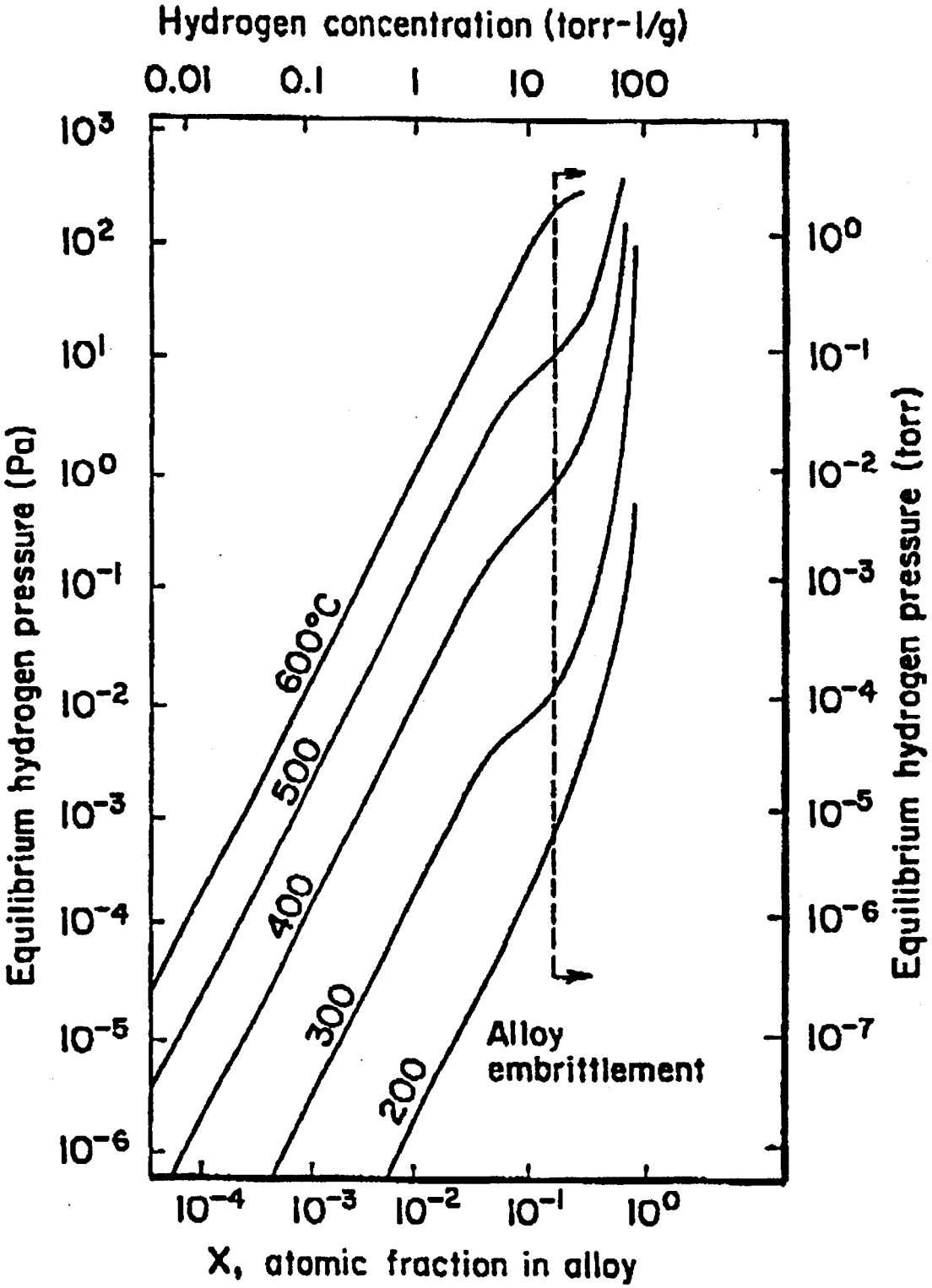
Hydrogen concentration (torr-l/g)
0.01
0.1
1
10
100
10^3
10^2
10^1
10^0
10^{-1}
10^{-2}
10^{-3}
10^{-4}
10^{-5}
10^{-6}
Equilibrium hydrogen pressure (Pa)
10^0
10^{-1}
10^{-2}
10^{-3}
10^{-4}
10^{-5}
10^{-6}
10^{-7}
Equilibrium hydrogen pressure (torr)
600°C
500
400
300
200
Alloy
embrittlement
10^{-4}
10^{-3}
10^{-2}
10^{-1}
10^0
X, atomic fraction in alloy

FIG. 1

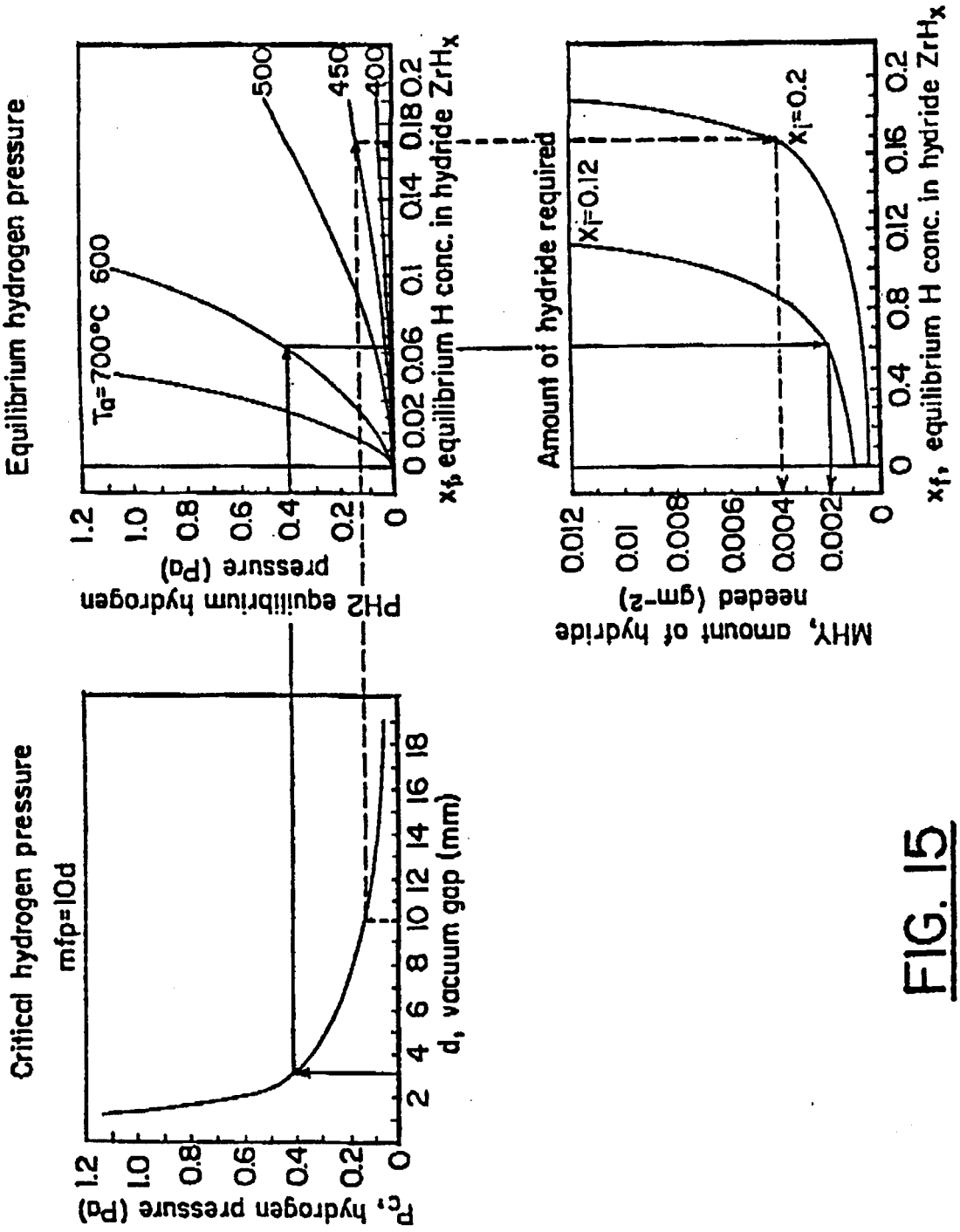
Critical hydrogen pressure
mfp=10d
P_c, hydrogen pressure (Pa)
d, vacuum gap (mm)
Equilibrium hydrogen pressure
T_a=700°C
600
500
450
400
PH2 equilibrium hydrogen pressure (Pa)
x_f, equilibrium H conc. in hydride ZrH_x
Amount of hydride required
x_i=0.12
x_i=0.2
MHY, amount of hydride needed (gm^{-2})
x_f, equilibrium H conc. in hydride ZrH_x

FIG. 15

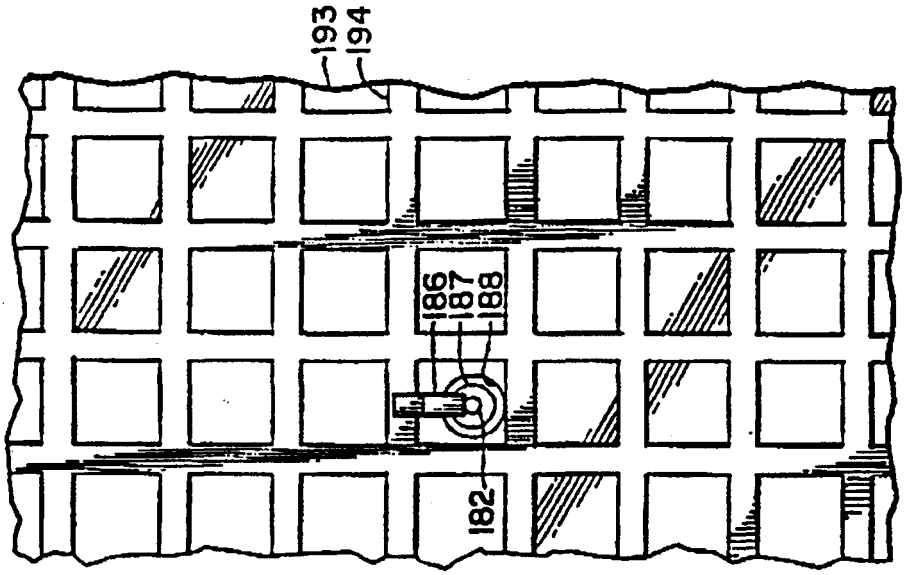
193
194
186
187
188
182

FIG. 17

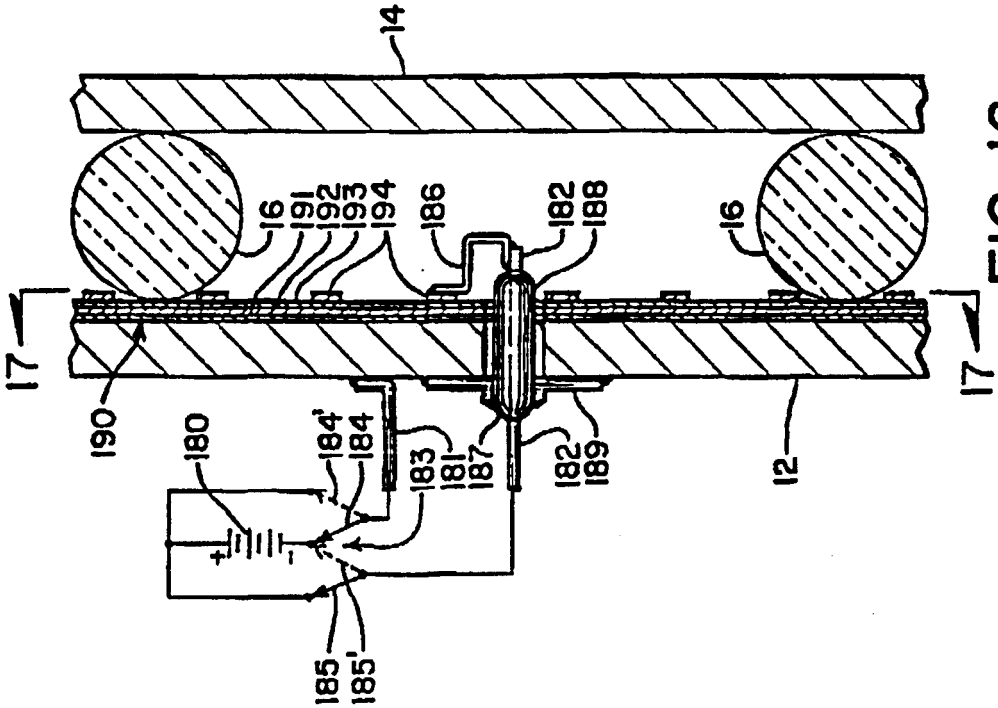
14
16
191
192
193
194
186
182
188
16
17
17
190
180
184'
184
183
181
187
182
189
12
185
185'

FIG. 16

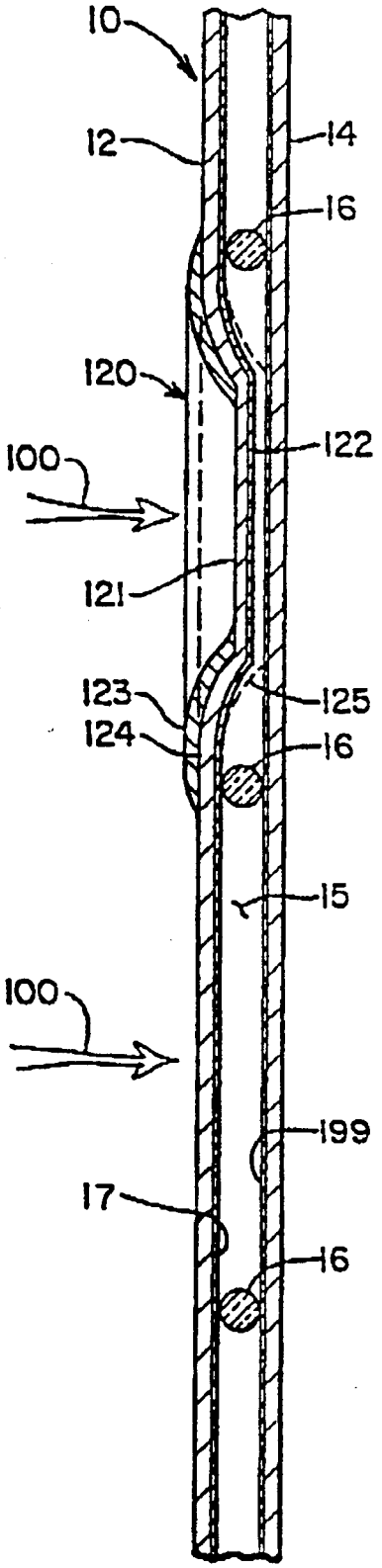
10
12
14
16
120
122
100
121
123
125
124
16
15
100
199
17
16

FIG. 18

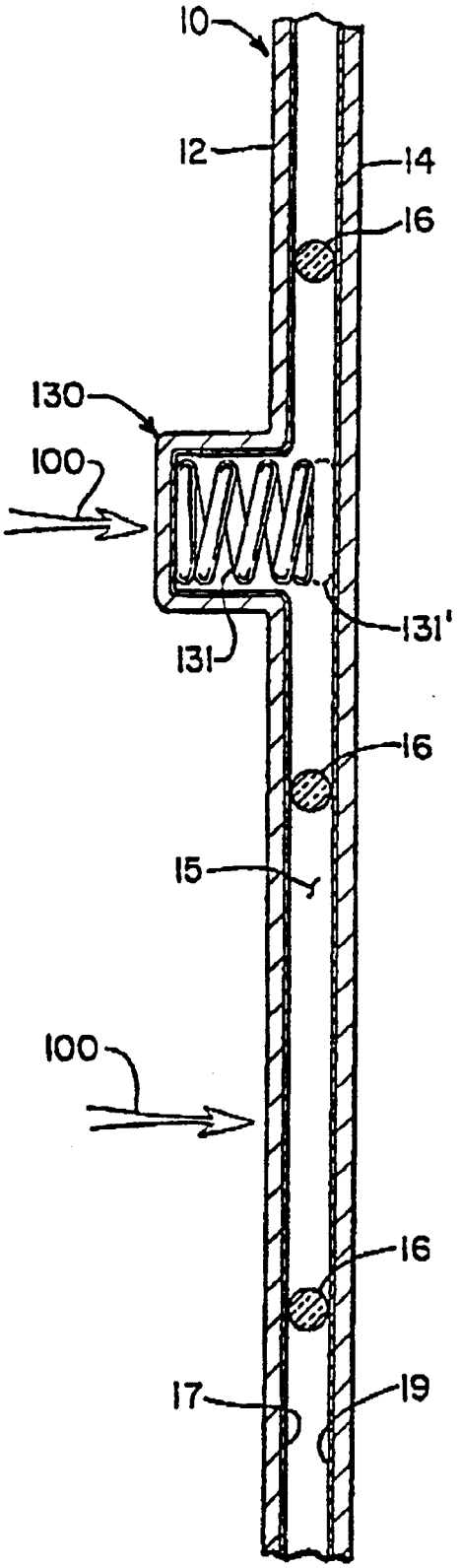
10
12
14
16
130
100
131'
131
16
15
100
16
17
19

FIG. 19

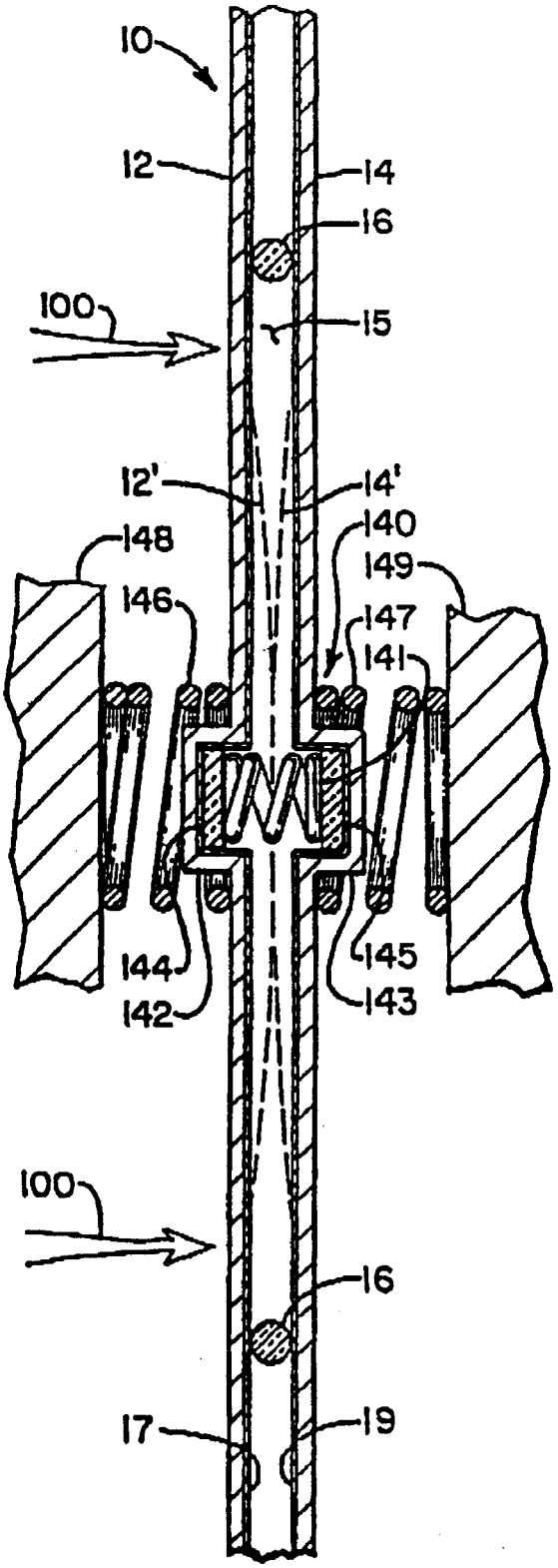
10
12
14
16
100
15
12'
14'
140
148
149
146
147
141
144
145
142
143
100
16
17
19

FIG. 20

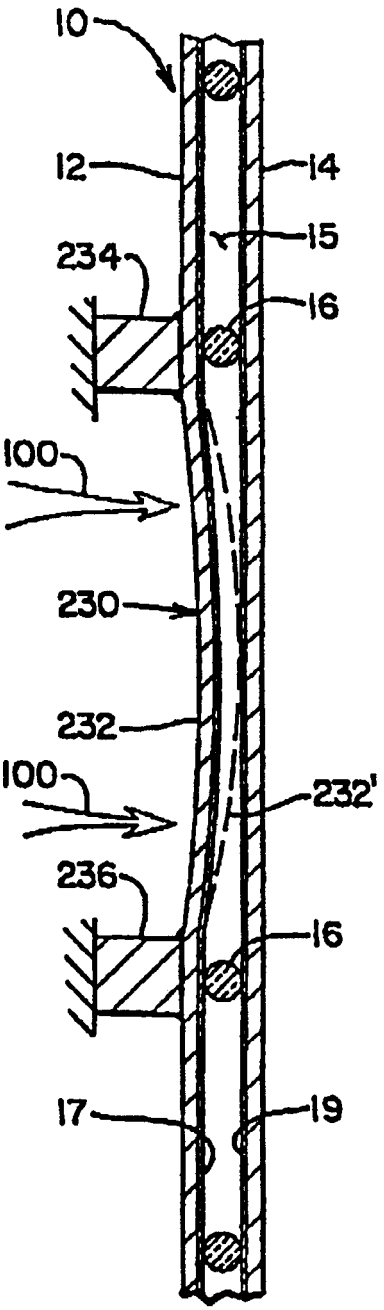
10
12
14
15
234
16
100
230
232
100
232'
236
16
17
19

FIG. 23

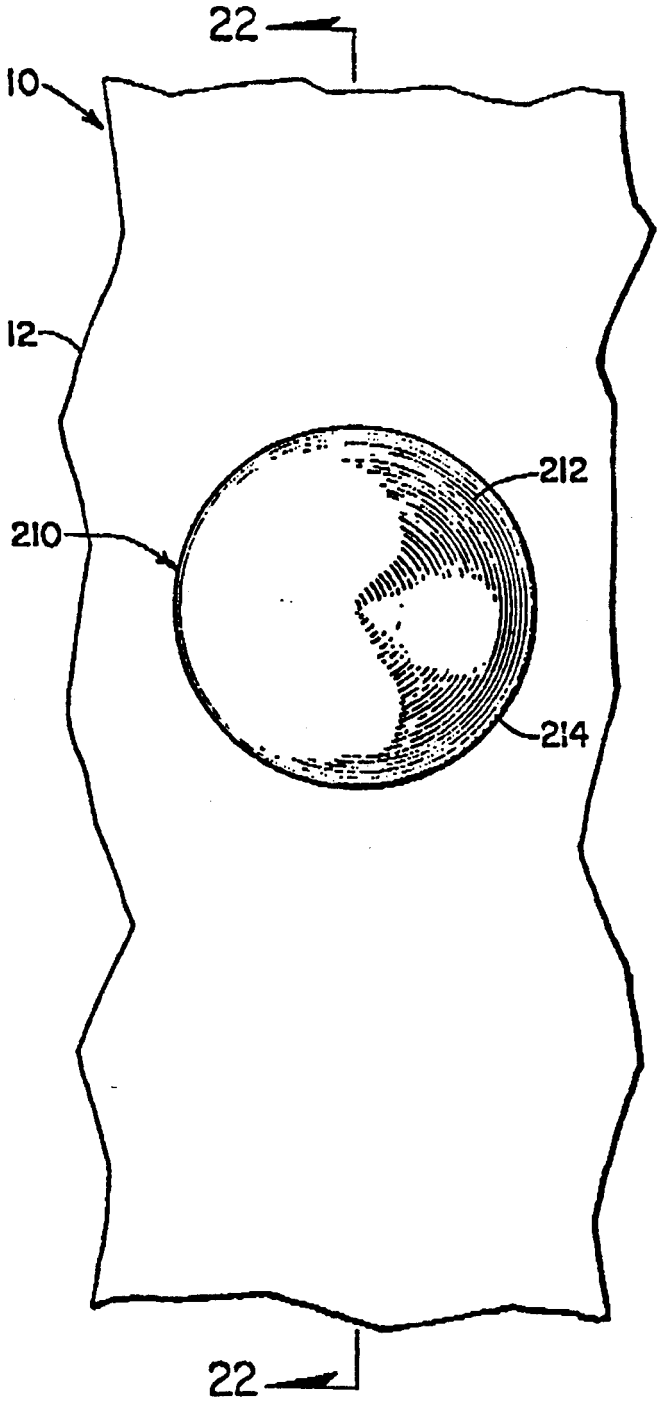
22
10
12
210
212
214
22

FIG. 21

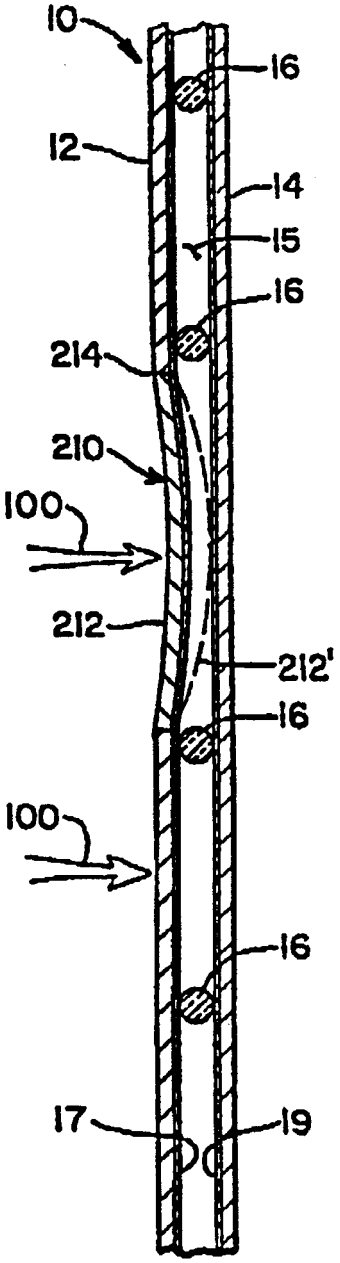
10
16
12
14
15
16
214
210
100
212
212'
16
100
16
17
19

FIG. 22

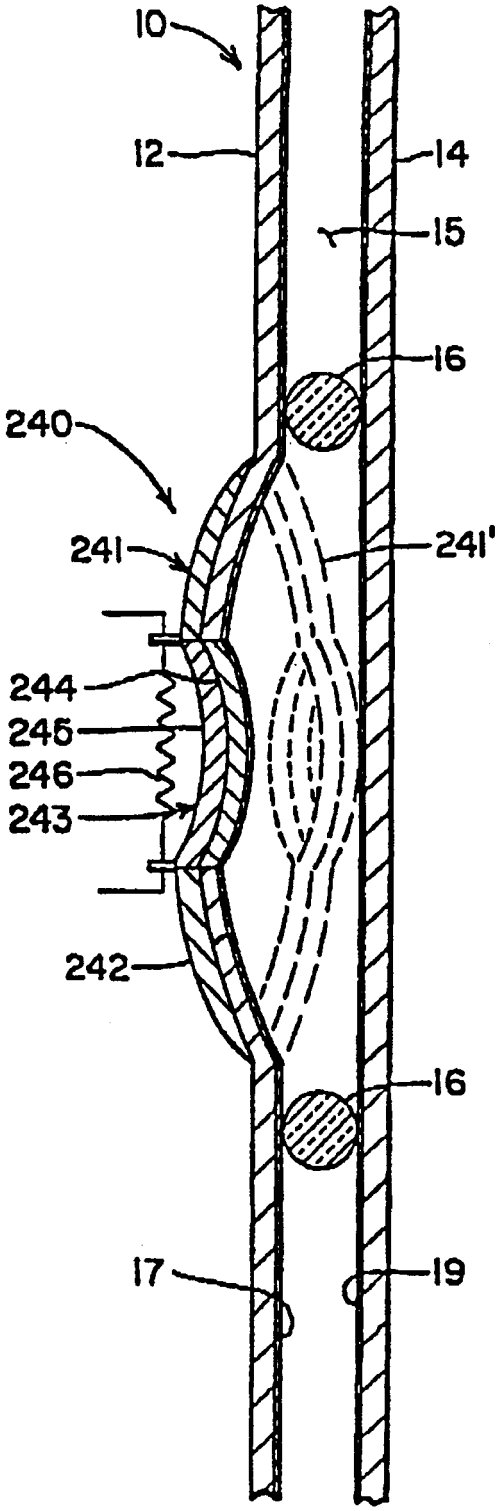
10
12
14
15
16
240
241
241'
244
245
246
243
242
16
17
19

FIG. 24

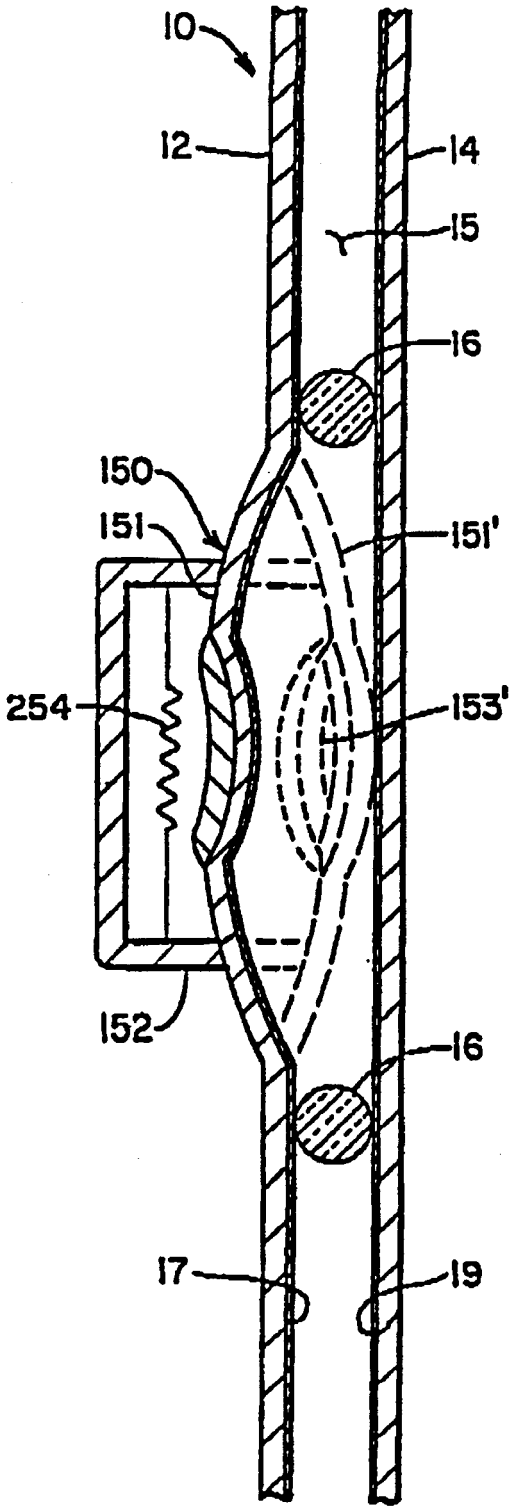
10
12
14
15
16
150
151
151'
254
153'
152
16
17
19

FIG. 25

MATERIAL-CONTROLLED DYNAMIC VACUUM INSULATION

BACKGROUND OF THE INVENTION

1. Contractual Origin of the Invention

The United States Government has rights in this invention under Contract No. DE-AC02-83CH10093 between the U.S. Department of Energy and the National Renewable Energy Laboratory, a Division of Midwest Research Institute.

2. Cross-Reference to Related Patent Applications

This patent application is a divisional application of U.S. patent application Ser. No. 07/960,885 filed Oct. 14, 1992, which a notice of allowance has been received and which is a Continuation-in-Part of U.S. patent application Ser. No. 07/856,840, filed on Mar. 14, 1992, (now issued U.S. Pat. No. 5,175,975) which is a Continuation-in-Part of U.S. patent application, Ser. No. 07/181,926, filed Apr. 15, 1988 (now abandoned), and U.S. patent application Ser. No. 07/535,782, filed on Jun. 12, 1990, (now U.S. Pat. No. 5,157,893) which is a Continuation-in-Part of U.S. patent application Ser. No. 07/181,926 filed on Apr. 15, 1988 (now abandoned).

3. Field of the Invention

This invention is related to vacuum insulation panels and more particularly to apparatus for selectively enabling and disabling, i.e., turning "on" and "off," the thermal insulating effect of compact vacuum insulation panels.

4. Description of the State of the Art

In our co-pending patent applications, Ser. No. 07/856,840 (now U.S. Pat. No. 5,175,975) and Ser. No. 07/535,782 (now U.S. Pat. No. 5,157,893), we described the need for better, more compact, and more versatile insulation products. The principal invention described in those patent applications provided a significant advancement in compact vacuum insulation that is thin, bendable, very effective insulation. It also has a very long useful life, yet has interior and exterior structures that are easy to manufacture. Such compact vacuum insulation is very effective for applications where the need for thermal insulation is constant and where static insulation can meet such a need. However, there are many applications that can benefit greatly by a changeable insulation that can be selectively enabled and disabled, i.e., turned "on" and "off," at desired times. For example, in applications where it is desired to retain heat for some period of time and then to dissipate heat for another period of time, it would be helpful to have insulation that can be turned "on" and "off."

There have been some apparatus and methods developed for enabling and disabling insulation. For example, U.S. Pat. No. 3,450,196 to P. Bauer discloses the general concept of enabling and disabling vacuum insulation panels by varying or controlling the gas pressure (vacuum) within the panels. The T. Xenophou patent, U.S. Pat. No. 3,968,831 applied that principle to building walls by connecting partial vacuums in the walls to a vacuum pump.

H. Bovenkerk, in his U.S. Pat. No. 3,167,159, disclosed the rather clever idea of using a metal hydride in combination with a small heating element, to selectively enable and disable vacuum insulation. The hydride naturally absorbs and retains hydrogen, and it can be heated to release the hydrogen into the vacuum insulation in large enough quantities to disable the vacuum insulation. Upon cooling, the hydride re-absorbs the hydrogen gas to again enable the vacuum insulation. Gross et al. used metal hydride and a heating element to heat the hydride for disabling and enabling vacuum insulation around a sodium-sulphur battery in his U.S. Pat. No. 4,235,956. While such Bovenkerk and Gross et al. devices can work for enabling and disabling vacuum insulation, they have the disadvantage of having to keep the heating element powered for as long as the insulation is to be disabled, i.e., for as long as good heat transfer is needed. In some applications, where power availability is limited and needs to be conserved, such a constant power drain can be very inconvenient, if not intolerable.

H. Buchner, in his U.S. Pat. No. 4,224,980, used the hydride hydrogen storage and release concept in a passive sense for essentially self-regulating heat retention and dissipation with vacuum insulation around a fuel injection/ignition chamber in a diesel engine. He uses the vacuum insulation to retain heat in the injection/ignition chamber as the diesel engine warms up, but he then relies on heat from the injection/ignition chamber itself to heat the hydride and release hydrogen to disable the vacuum insulation as the temperature of the diesel engine around the injection/ignition chamber rises. D. Dechert accomplished a similar result with the self-regulating vacuum insulation disclosed in his U.S. Pat. No. 3,424,622, to maintain the 300° C. operating temperature of a fused salt battery, although he used a solid or liquid with vapor pressure that increases with temperature, instead of a metal hydride and hydrogen, to vary the insulating effectiveness of the vacuum insulation. These Buchner and Dechert devices are effective for passive enabling and disabling of vacuum insulation at inherent temperatures according to the materials and systems designs, but they are not capable of individual control, or of being turned "on" and "off" at arbitrary or different temperatures.

SUMMARY OF THE INVENTION

Accordingly, it is a general object of this invention to provide effective compact vacuum insulation that can be enabled and disabled.

A more specific object of this invention is to provide compact vacuum insulation that can be enabled and disabled at arbitrary or different temperatures.

Another specific object of the present invention is to provide compact vacuum insulation that can be enabled and disabled in a digital manner, i.e., either "on" or "off," with consumption of power only at the transition between the enabled state and the disabled state or vice versa, but without requiring power to maintain it in either the enabled or disabled state.

Still another object of this invention is to provide compact vacuum insulation that has improved passive control devices for switching the insulation "on" and "off" in response to changes in temperature.

Additional objects, advantages, and novel features of the invention are set forth in part in the description that follows, and in part will become apparent to those skilled in the art upon examination of the following specification or may be learned by the practice of the invention. The objects and advantages of the invention may be realized and attained by means of the instrumentalities, combinations, and methods particularly pointed out in the appended claims.

To achieve the foregoing and other objects and in accordance with the purposes of the present invention, as embodied and broadly described herein, the apparatus of this invention may comprise two metal sidewalls separated by a vacuum chamber and held apart by glass-like spacers and

sealed around the edges with metal-to-metal welds and one or more disabling features capable of frustrating the ability of the vacuum chamber to inhibit the flow of heat from one sidewall to the other. Disablement by thermal short circuit via metal-to-metal contacts are implemented by bimetallic laminated, bimetallic nonlaminated, anchored monometal, or plastic memory metal switches that bridge the chamber in response to change of temperature or that push the sidewalls together against separation bias.

BRIEF DESCRIPTION OF THE DRAWINGS

The accompanying drawings, which are incorporated in and form a part of the specifications, illustrate the preferred embodiments of the present invention, and together with the description serve to explain the principles of the invention.

In the Drawings:

FIG. **1** is a perspective view of a compact vacuum insulation panel;

FIG. **2** is a cross-sectional view of the compact vacuum insulation panel of FIG. **1**;

FIG. **3** is a cross-sectional view of a compact vacuum insulation panel with alternate web and nodule spacers and a foil edge seal;

FIG. **4** is a graphical representation of the insulation effectiveness of compact vacuum insulation against heat transfer as affected by variations in gas pressure, variations in emissivity, and metal-to-metal contacts alone and in relation to each other;

FIG. **5** is a perspective view of a compact vacuum insulation panel equipped according to this invention with a gas controller apparatus, variable emissivity coating, and a plurality of bimetallic laminate metal-to-metal switches for selectively disabling the insulation panel;

FIG. **6** is a cross-sectional view of the compact vacuum insulation panel of FIG. **5**;

FIG. **7** is an enlarged perspective view of the gas control apparatus mounted in a sidewall of the insulation panel;

FIG. **8** is an enlarged plan view of the gas control apparatus for use with the compact vacuum insulation according to this invention;

FIG. **9** is an enlarged and elevation view of the gas control apparatus;

FIG. **10** is a cross-sectional view of the gas control apparatus taken along line **10**—**10** of FIG. **9**;

FIG. **11** is a schematic diagram of an electric heating circuit for the gas control apparatus of FIG. **10**;

FIG. **12** is an enlarged cross-sectional view of a compact vacuum insulation panel according to this invention with an alternate embodiment gas control apparatus and illustrating the bimetallic laminate switches on the opposite side of the panel for passive actuation by the heat in the environment being controlled;

FIG. **13** is a chart that shows example equilibrium hydrogen pressures over various hydrides of zirconium and titanium alloys;

FIG. **14** is a chart that shows example equilibrium hydrogen pressures of various iron, zirconium, vanadium alloys;

FIG. **15** is a graphical illustration of the selection of design parameters for dynamic compact vacuum insulation leading to the determination of the amount of hydride required per unit area;

FIG. **16** is an enlarged cross-section of an insulation panel equipped with an electrochromic variable emissivity coating according to this invention;

FIG. **17** is a cross-sectional view of the surface of the electrochromic variable emissivity coating taken along line **17**—**17** of FIG. **16**;

FIG. **18** is an enlarged cross-sectional view of a compact vacuum insulation panel equipped with an alternate bimetallic laminate metal-to-metal switch according to this invention;

FIG. **19** is an enlarged cross-sectional view of a compact vacuum insulation panel equipped with an alternate embodiment metal-to-metal switch according to the present invention;

FIG. **20** is an enlarged cross-sectional view of a compact vacuum insulation panel equipped with still another alternate embodiment metal-to-metal switch that pushes the two sidewalls together against a separating bias;

FIG. **21** is a side elevation view of an alternate embodiment thermal shorting switch with a nonlaminated bimetallic actuating element according to this invention;

FIG. **22** is a cross-sectional view of the thermal shorting switch taken along line **22**—**22** of FIG. **21**;

FIG. **23** is a cross-sectional view of another alternate embodiment thermal shorting switch with an anchor-confined depression as an actuating mechanism;

FIG. **24** is an enlarged cross-sectional view of a compact vacuum insulation panel equipped with an active metal-to-metal switch; and

FIG. **25** is an enlarged cross-sectional view of a compact vacuum insulation panel equipped with a manual push-button metal-to-metal switch with an active bimetallic device to re-enable the insulation panel.

DESCRIPTION OF THE PREFERRED EMBODIMENTS

Compact vacuum insulation, for purposes of describing the embodiments of this invention is preferably, although not necessarily, an ultra-thin insulation panel **10**, as illustrated in FIGS. **1** and **2**. The compact vacuum insulation panel **10** is preferably constructed with two sidewalls **12**, **14** positioned in parallel, closely spaced relation to each other and sealed at the edges by metal-to-metal welds **18** to enclose a space or vacuum chamber **15**. In some applications, especially for smaller panels **60**, as illustrated in FIG. **3**, it may be beneficial to provide thinner metal foil leaves **66** at the joints between the edges of the sidewalls **12**, **14**, but still utilizing metal-to-metal welds **67**, **68** to make the seals. Such thinner foil leaves **66** can inhibit heat transfer from one sidewall **12** to the other sidewall **14** around their edges more than the direct metal-to-metal welds **18** of panel embodiment **10** in FIGS. **1** and **2**.

Glass, ceramic, porcelain-coated metal, or other glass-like spacers **16** are positioned at spaced intervals between the sidewalls **12**, **14** to hold them apart when the space of chamber **15** is evacuated. The spacers **16** can be discrete spherical beads, as illustrated in FIGS. **1** and **2**, or they can be nodules **64** protruding from webs **62**, as illustrated in the panel **60** in FIG. **3**. The webs **62** can be the same material as the nodules **64**, such as glass, ceramic, or other glass-like materials, or they can be metal mesh with glass-like beads or porcelain-coated metal spacers functioning as protrusions or nodules **64**. A getter material **21** may be included, as shown in FIG. **2**, to attract and withdraw extraneous gaseous molecules from the chamber **15**.

The thinner foil edge leaves **66** do not necessarily have to be used with the web **62** and nodule **64** structures or vice

versa. Those are independent alternatives that are both illustrated in the embodiment **60** of FIG. **3** for convenience only.

Other suitable spacer structures, methods of fabrication, preferred parameters, and alternate embodiments can be found in the U.S. Pat. No. 5,175,975, which is a continuation of U.S. patent application Ser. No. 07/181,926 (now abandoned) and U.S. Pat. No. 5,157,893, which is a Continuation-in-Part of U.S. patent application Ser. No. 07/181,926 (now abandoned), and in U.S. Pat. No. 5,107,649, all of which are incorporated by reference herein. However, the important combination of features to obtain effective compact vacuum insulation according to this invention include: (1) the thin and hard but bendable metal wall sheets **12**, **14** closely spaced together; (2) glass or glass-like spacers **16** or **64** that not only have low thermal conductivity, but also do not evolve gases, like plastics and other materials would; (3) the glass or glass-like spacers **16** or **64** are discrete objects in spaced apart relation, not powders or fibers that would trap gases, provide more thermal conductivity, and interfere with the leak-proof integrity of welded seals; (4) the spacers **16** or **64** are rounded or pointed to provide "point" or "near point" contact, not flat surface contact, with the wall sheets **12**, **14**; (5) the vacuum in the space or chamber **15** is sufficient to meet the criteria of having the mean free path between molecular collisions greater than the distance between wall sheets **12**, **14**, preferably lower than 10^{-5} torr, and ideally at least 10^{-6} torr; (6) the edge seals **18** are metal-to-metal welds that can seal the vacuum for twenty years or longer, not plastics, glass, adhesives, or clamp strips that leak or evolve gases enough to disable the insulative effect in a short time or need intermittent re-evacuation; and (7) low emissivity surfaces or surface coatings **17**, **19** on the sidewalls **12**, **14**.

When the space or chamber **15** between the sidewalls **12**, **14** is evacuated, heat transfer across the panel **10**, **60** can be substantially inhibited. The extent of the vacuum in relation to the distance between the sidewalls **12**, **14** can determine the relative amount or rate of heat transfer. Referring to FIG. **4**, the rate of heat transfer, ΔHEAT, is graphed in log relation to gas pressure, PRESSURE (in torr), for ultra-thin insulation according to this invention, where the spacing between sidewalls **12**, **14** is preferably in the range of about 2 to 5 mm but practically about 0.5 to 20 mm. Essentially, when the vacuum in chamber **15** is sufficient to maintain the gas pressure at about 10^{-6} torr or less, the heat transfer across the panel continues at a more or less substantially constant rate, as shown by the portion **96** of the curve **90** in FIG. **4**, regardless of additional pressure drop. In that vacuum range the heat transfer is dominated almost entirely by the heat transfer mechanisms of infrared radiation across chamber **15** and conduction through the spacers **16**, neither of which heat transfer mechanisms is affected significantly by gas pressure. The exact gas pressure at which this overriding domination of heat transfer by radiation across chamber **15** and by conduction through spacers **16** occurs depends not only on the distance between sidewalls **12**, **14**, but also on the temperature. In general, the hotter the temperature, the more heat transfer will tend to be dominated by radiation. However, for panels **10** constructed according to the description above, that effect occurs in the range of about 10^{-6} torr. Therefore, as illustrated by the portion **96** of the curve **90**, decreasing the gas pressure below about 10^{-6} torr does not increase the effective insulation function of the compact vacuum insulation panel **10**. Increasing the gas pressure above 10^{-6} torr, however, does decrease the insulative effect of the insulation panel **10**.

As the gas pressure is raised above 10^{-6} torr, the heat transfer across the compact insulation panel **10** increases in a fairly linear manner, as shown by the portion **94** of the curve **90** in FIG. **4**. This increase in heat transfer results from having more gas molecules available in chamber **15** to conduct heat energy from one sidewall **12** to the other **14**, or vice versa, in sufficient quantities to add to the heat transfer that occurs by radiation and conduction through spacers **10**. The linear relationship between increase in gas pressure above about 10^{-6} torr and the resulting increase in heat transfer, as shown by the portion **94** of the curve **90** in FIG. **4**, indicates that the more gas molecules are available in the chamber **15** to conduct heat, the more heat will be conducted from one sidewall **12** or **14** to the other. However, when the gas pressure in the chamber **15** increases to about 10^{-4} torr (10^{-7} atmospheres), there is a pronounced bend **92** in the curve **90** in FIG. **4** to essentially a flat line portion **98**, where increase in gas pressure does not result in a corresponding, in fact any, significant increase in heat transfer. The area of the bend **92** at about 10^{-4} torr is where there are sufficient gas molecules in the chamber **15** such that the mean free path between the molecules is about equal to the distance between the sidewalls **12**, **14**. Consequently, to obtain any beneficial increase in insulating effect from the enclosed chamber **15** over an enclosed chamber with air or other gas at normal atmospheric pressure (760 torr), the vacuum has to be at least sufficient to remove enough gas molecules so that the mean free path between collisions of the molecules is greater than the distance between the sidewalls **12**, **14**, which occurs at about 10^{-4} torr for the ultra-thin compact vacuum insulation according to this invention.

If the low emissivity coatings **17**, **19** on the sidewalls **12**, **14** were eliminated, the resulting heat transfer would be increased by the resulting increase in radiation from one sidewall **12** or **14** to the other, as indicated by the curve **90'** in FIG. **4**. Essentially, all of the portions **92**, **94**, **96**, and **98** of curve **90** remain in substantially the same relation to each other in the resulting curve **90'**, as indicated at **92'**, **94'**, **96'** and **98'**, except that the actual heat transfers at those portions are higher by the amount of the increased radiation that occurs without the low emissivity coatings.

On the other hand, a metal-to-metal contact between the sidewalls **12**, **14** is such an effective heat conductor that it causes the insulation effect of the panel **10** to be virtually eliminated in the vicinity of the metal-to-metal contact, regardless of the extent of the vacuum in chamber **15** and regardless of the presence or absence of the emissivity coatings **17**, **19**. The effect of such a metal-to-metal contact on heat transfer between the sidewalls **12**, **14** in relation to vacuum or gas pressure and emissivity is illustrated by the curve **90"** in FIG. **4**. It is so effective at eliminating resistance to thermal transfer across the compact vacuum insulation that it can be considered analogous from a thermal perspective to a short circuit in an electrical context, i.e., a thermal short circuit, or sometimes simply referred to herein as a "thermal short."

The dynamic or changeable compact vacuum insulation according to this invention varies the resistance to heat flow between sidewalls **12**, **14** by varying one or more of the mechanisms described above, i.e., molecular or gas conduction, radiation or emissivity, and metal-to-metal contact or thermal short. The variation in gas conduction varies heat transfer along the portion **94** of curve **90** in FIG. **4**, while the variation in emissivity or radiation varies heat transfer between the curves **90** and **90'**. The metal-to-metal contact or thermal short, on the other hand, varies heat transfer from either curve **90** or **90'**, or from anywhere between curves **90**

and **90'**, to curve **90"**, as will be described in more detail below.

As mentioned above, the curve **90"** illustrates the effect of heat transfer of a thermal short in relation to gas pressure and emissivity, but it is representative of that effect only at or near the location of the metal-to-metal contact that causes the thermal short. As distance along either sidewall **12** or **14** from the metal-to-metal contact increases, the full effect of the change in heat transfer as indicated by curve **90"** diminishes. Therefore, for a dynamic compact vacuum insulation panel that has a large surface area, partial or full transition between the relative heat transfer rates indicated by curves **90** and **90"** in FIG. **4** can be implemented by providing a plurality of such thermal shorts at spaced distances frown each other. Such thermal shorts dispersed over the surface of the compact vacuum insulation according to this invention can be turned "on" and "off" individually or in various combinations, either automatically, or by active control, as will also be described in more detail below.

The compact vacuum insulation panel **10** is shown in FIG. **5** equipped with exemplary apparatus, according to this invention, for varying the thermal heat transfer or insulative characteristics in a dynamic manner by utilizing the principles discussed above. It includes gas control apparatus **20** for varying the amount and pressure of gas in the chamber **15**, a variable emissivity coating **170** on the interior surface of sidewall **12**, and a plurality of bimetallic laminate switches **110**. The gas control apparatus **20** varies heat transfer by molecular conduction; the variable emissivity coating **170** varies heat transfer by varying infrared radiation; and the bimetallic laminate switches **110** vary the thermal transfer by creating thermal shorts through metal-to-metal contact between sidewalls **12**, **14**. Each of them can partially or completely turn the compact vacuum insulation panel **10** "on" and "off" to varying degrees and at varying temperatures and speeds, or they can be used together or in sequence for special effects to maximize or to optimize dynamic control of the compact vacuum insulation panel **10** for various applications. These gas control apparatus **20**, variable emissivity coating **170**, and bimetallic laminate switches **110** are shown in more detail as they are mounted in the compact vacuum insulation panel **10** in the enlarged cross-sectional view of FIG. **6**. However, for purposes of a brief introduction, the gas control apparatus **20** preferably includes a metal hydride material for selectively storing, releasing, and retrieving hydrogen gas in the vacuum chamber **15**. It preferably varies the vacuum pressure from at least as low as 10^{-6} torr, to at least as high as about 10^{-4} torr. As shown by the portion **94** of curve **90** in FIG. **4**, such a variation in gas pressure between 10^{-6} torr and 10^{-4} torr results in corresponding variations of heat transfer through the compact vacuum insulation panel **10**.

The variable emissivity coating **170** is preferably a thin film of a thermochromic material that changes emissivity as a function of changing temperature. It can be used to vary heat transfer through panel **10** between curves **90** and **90'** in FIG. **4**. Materials such as vanadium oxide that change emissivity as a function of temperature can be used as a passive control, for example, increasing emissivity, thus heat transfer, as temperature and vice versa. As an alternative, however, an electrochromic material such as nickel hydroxide ($Ni(OH)_2$) or tungsten trioxide (WO_3), which varies emissivity in response to application of electric potential, can be used for active variation in heat transfer resistance of the compact vacuum insulation panel **10** with external controls. It is preferable when using a variable emissivity coating **170** on one sidewall **12** to either eliminate the low emissivity coating **19** from the other sidewall **14**, or to use a variable emissivity coating **170** on each sidewall **12**, **14**, because a low emissivity coating **19** on one sidewall **14**, in combination with a variable emissivity coating **170** on the other sidewall **12**, could defeat or thwart any increased radiative heat transfer produced when increasing the emissivity of the variable emissivity coating **170**. Therefore, while the variable emissivity coating **170** is shown on only one sidewall **12**, preferably the hot sidewall that is adjacent the heat source being selectively insulated, an additional variable emissivity coating could be used on the other sidewall **14**, too.

The bimetallic laminate switch **110** causes a thermal short between sidewalls **12**, **14**, which varies heat transfer as described above and indicated between curves **90** and **90"** in FIG. **4**. Such bimetallic laminate switches are conducive to both passive and active applications, as will be described in more detail below. Such metal-to-metal contacts can also be induced by other mechanisms, such as nonlaminate structures of different metal combinations, externally anchored expandable metals, or metals that are plastically deformable in one temperature range, but which become elastic and return to an original memory configuration at another temperature range.

The gas control apparatus **20** is shown in more detail in FIGS. **6–11**. It comprises a container **22**, a metal hydride **24**, and a hydrogen gate **26**. Referring primarily to FIGS. **10** and **11**, the container **22** contains a pellet of metal hydride **24**, such as zirconium hydride, which has the property of absorbing and retaining hydrogen atoms in its crystal lattice at cooler temperatures, but it releases and dissipates the hydrogen atoms at higher temperatures. Hydrogen, which is a low molecular weight, diatomic gas, has a very high thermal conductivity, even at very low pressures in the range of 10^{-5} atmosphere (7.5×10^{-3} torr), so a very small amount of hydrogen is sufficient to fill a large vacuum insulation panel to a pressure that is sufficient to transfer heat across the chamber **15** in panel **10** at a relatively high rate. Therefore, a small amount of metal hydride **24** can be heated to release enough hydrogen into chamber **15** to effectively disable or "turn off" the compact vacuum insulation panel **10**. Then, when the metal hydride **24** is allowed to cool, it will quickly re absorb and retain the hydrogen from the vacuum chamber **15**, thereby re-enabling or "turning on" the insulative effect of the panel **10**. Of course, the extent of the insulative effect of panel **10** can be varied by controlling the temperature to which the metal hydride **24** is heated, such as to heat it only enough to release a very small amount of hydrogen into chamber **15** thereby only partially "turning off" the insulative effect of panel **10**.

In applications where an environment needs to be insulated to retain heat at some times, but to dissipate excess heat at other times, it may be desirable to have a passive or self-regulating dynamic vacuum insulation that turns "on" and "off" automatically as a function of the temperature in the environment to be controlled. In such applications, it might be satisfactory to position the metal hydride outside the panel (not illustrated), where it is exposed to the environment to be controlled, or perhaps inside chamber **15**, but in contact with one of the metal sidewalls **12**, **14** (not illustrated) for the purpose of having the metal hydride **24** temperature follow the temperature of the environment. Then, when the environment to be controlled becomes too hot, the metal hydride **24** will automatically begin releasing hydrogen into chamber **15** to partially or completely "turn off" the insulation, thus allowing heat from the environment to dissipate through the insulation panel **10**. The metal

hydride can be selected or designed to release hydrogen at the desired transition temperature for the compact vacuum insulation panel **10** to change from an insulating to a noninsulating device.

The metal hydride **24** can also be heated artificially, such as with an electric resistor or heater element **21**, to release the hydrogen and disable the insulation panel **10**, which is an example of an active control to turn the insulation panel **10** "on" and "off." To minimize the adverse effects of a parasitic power drain and an unwanted additional continuous heat source, the gas control apparatus **20** of the present invention provides a hydrogen gate **26** in combination with the metal hydride container **22**. In the gas control apparatus embodiment **20** shown in FIGS. **6–11**, the hydrogen gate **26** is the metal enclosure that comprises the container **22**. The function of the hydrogen gate **26** is to allow hydrogen to escape frown the container **22** and pass into the chamber **15** of panel **10** when the metal hydride **24** is heated for that purpose, but to let the hydrogen re-enter the container **22** to be reabsorbed by the cooled metal hydride **24** only at selected times that are actively controllable, independent of the temperature of the metal hydride **24**.

To perform the hydrogen gate function described above, the walls of the container **22** comprise a metal that is selectively permeable to hydrogen gas, thereby providing a controllable hydrogen permeable separator or gate **26** between the metal hydride **24** and the vacuum chamber **15**. For example, the walls of container **22** can be comprised of palladium or a suitable palladium alloy, which has the characteristic of being permeable to hydrogen gas when hot, but very impermeable to hydrogen gas when cooled. Therefore, when it is desired to turn the compact vacuum insulation "off," both the metal hydride **24** and the walls or hydrogen gate **26** of container **22** are heated. The hot metal hydride **24** releases hydrogen, and the hot walls or gate **26** allow the released hydrogen to pass into vacuum chamber **15**. Then, when the compact vacuum insulation panel **10** is sufficiently disabled or "turned off" by the additional hydrogen gas in chamber **15**, the heat to both the metal hydride **24** and the palladium foil gate **26** can be "turned off" to eliminate power consumption and unnecessary heat production. The resulting cooled metal hydride **24** will create a reduced hydrogen pressure gradient as it tries to reabsorb hydrogen into its crystal lattice, but the cooled palladium hydrogen gate **26** simultaneously becomes impermeable to hydrogen gas and blocks the hydrogen gas in chamber **15** from re-entering container **22** and reaching the metal hydride **24**. Therefore, the compact vacuum insulation panel **10** is disabled or "turned off" by temporarily heating both the metal hydride **24** and gate **26**, and it remains disabled or "turned off" after both are cooled without the need for continuous heating or power consumption.

When it is desired to re-enable or "turn on" the compact vacuum insulation panel **10**, only the palladium gate **26** is heated to become permeable to hydrogen, while leaving the metal hydride **24** cool. In that condition, the hydrogen gas in the chamber **15** quickly migrates through the hydrogen gate **26** to the reduced hydrogen pressure area in container **22** that is created by the cool metal hydride **24** and is quickly reabsorbed by the metal hydride **24**, thereby re-evacuating the chamber **15** of hydrogen gas thus re-enabling the compact vacuum insulation panel **10** to inhibit heat transfer through panel **10**.

In the preferred embodiment of the gas control apparatus **20**, the container **22** has its palladium metal foil wall or gate **26** shaped to provide two enlarged cylindrical compartments **21** and **23** connected by a narrow hollow neck or duct **25**. The metal hydride pellet **24** is positioned in compartment **21**. Each portion or compartment **21**, **23** can be heated separately or individually to accomplish the hydrogen gate functions described above. To provide such selective heating, an electric current can be passed through the palladium walls of either compartment **21** or **23**. The resistance of the palladium foil walls to the flow of electric current creates the desired heat in compartment **21**, both to release hydrogen from the metal hydride **24** and to make the wall or gate **26** of compartment **21** permeable to hydrogen, so the hydrogen can flow into chamber **15**. However, the flow of electric current through the palladium foil wall of compartment **23** creates the necessary heat to make only the wall or gate **26** of compartment **23** permeable to hydrogen, while leaving the compartment **21** and the metal hydride **24** relatively cool. Therefore, when only compartment **23** is heated, its palladium foil walls or gate **26** allow hydrogen from vacuum chamber **15** to flow back into the compartment **23** of container **22**. Once it is in compartment **23**, the hydrogen can pass through the narrowed neck or duct **25** into compartment **21**, where it can be reabsorbed by the cool metal hydride **24**. The enlarged cylindrical compartment **23** provides sufficient surface area to allow passage of the hydrogen from chamber **15** into container **22** quickly, while the narrow neck **25** inhibits heat flow from the hot compartment **23** to the relatively cooler compartment **21**. The palladium foil can also be thinner at the neck **25**, as illustrated in FIG. **10**, to further inhibit heat flow therethrough from compartment **23** to compartment **21**. As soon as the chamber **15** has been re-evacuated of hydrogen gas, the electric current flowing through compartment **23** can be switched off, thereby allowing the entire gas control apparatus **20** to cool until the next time it is desired to disable or "turn off" the compact vacuum insulation panel **10**.

Of course, other heating elements positioned adjacent the respective compartments **21** and **23** can be used instead of flowing electric current directly through the walls of compartments **21** and **23**, but the embodiment described above provides a compact structure that can be positioned inside the chamber **15** of compact vacuum insulation panel **10**. The selected electric currents can be delivered to the container **22** by three wire conductors **31**, **32**, and **33**. The palladium foil walls of compartments **21**, **23** can be crimped at their ends **27**, **29** to provide attachment points for wires **31**, **33**, respectively. The common wire **32** can be connected directly to the neck **25**, or a foil extension **30** of neck **25** can be provided as an attachment surface.

An appropriate simple electric circuit to operate the hydrogen gas control apparatus **20** described above is illustrated in FIG. **11**. The resistors **21** and **23** in FIG. **11** can represent the compartments **21** and **23** of container **22**, described above, or separate heating elements if desired. An electric power source **34** can be connected selectively to the resistors **21**, **23** by a switch **35**. When the switch **35** is connected to node **36**, current flows through resistor or compartment **21** via wires **31** and **32** to heat compartment **21** and metal hydride **24**, to release hydrogen to vacuum chamber **15**. Alternatively, when switch **35** is connected to node **38**, current flows through resistor or compartment **23** via wires **32** and **33**, to heat only compartment **23** for retrieving the hydrogen gas from vacuum chamber **15**. When switch **35** is positioned at node **37**, it is an open circuit where there is no power consumption. This open circuit condition is used at all times when the compact vacuum insulation panel **10** is maintained either in its enabled or "turned on" insulation mode or in its disabled or "turned off" insulation mode. Electric power is consumed and heat generated only

during transitions between the enabled and disabled insulation modes, as described above.

Referring now primarily to FIGS. **6** and **7**, the gas control apparatus **20**, as described above, is structured for mounting inside chamber **15** of compact vacuum insulation panel **10**. As such, it is shown in combination with a vacuum-tight mounting insert **40** that accommodates the passage of wires **31**, **32**, **33** through sidewall **14** of panel **10** without compromising the integrity of the vacuum sealed chamber **15**, which is essential to a long-life dynamic compact vacuum insulation panel **10**. This mounting insert **40** comprises a metal annular container ring **41** that has an external flange **42** extending radially outward from one end and two internal flanges **43**, **44** extending radially inward from respective opposite ends. The container ring **41** is filled with an impermeable, non-outgassing ceramic material **45** that is an electric insulator around metal wires **31**, **32**, **33**. Such insulator ceramic-to-metal seals are well-known to persons skilled in that art. Therefore, suffice it to say that the ceramic material may be magnesium oxide and the metal ring **41** may be stainless steel. A vacuum proof seal between the metal ring **41** and the ceramic material **45** can be maintained by metal brazing. The mounting insert **40** is fastened in sidewall **14** by welding **46** around its peripheral surface.

An alternate embodiment gas control apparatus **50** is shown in FIG. **12**. It has a metal container **51** for the metal hydride pellet **54**, but the metal container **51** is not made of palladium or any other hydrogen permeable material. The hydrogen gate **56** is a piece of palladium foil mounted in a separate metal container **53** that is also impermeable to hydrogen. The container **53** and palladium foil gate **56** can be heated separately from the container **51** and metal hydride pellet **54**. The two containers are connected by a duct **55**. The container **53** is connected to the chamber **15** in insulation panel **10** by nipple **52** that is welded to sidewall **14**. The palladium hydrogen gate **56** occludes the entire passage between vacuum chamber **15** and container **51**, so it has to be heated to a temperature where it is permeable to hydrogen before hydrogen can pass from metal hydride **54** to chamber **15** or vice versa.

Two heating elements **57**, **58** are provided for heating the metal hydride **54** and hydrogen gate **56**, respectively, and each heating element **57**, **58** can be turned "on" and "off" independently of the others by respective switches **59**, **60**. Therefore, when it is desired to disable the compact vacuum insulation panel **10** to allow heat **100** to flow through the panel **10**, both heating elements **57** and **58** would be "turned on." The heating element **57** heats metal hydride **54** to release hydrogen, and heating element **58** heats the palladium hydrogen gate **56** to allow the hydrogen to pass through duct **55** and nipple **52** into chamber **15**. Then both heating elements are "turned off" allowing the gate **56** and metal hydride **54** to cool. The cooled metal hydride **54** creates a reduced hydrogen pressure in container **51**, but the hydrogen gas in chamber **15** is prohibited from returning to container **51** by the cooled hydrogen gate **56**. Therefore, the insulation panel **10** remains disabled by the hydrogen gas in chamber **15** without continuous power drain from electric power source **61** and without additional heat production from heating elements **57**, **58**.

When it is desired to re-enable insulation panel **10** against transfer of heat **100**, momentary heating of only the palladium gate **56** with heating element **58** is required. This heating of element **58** has to be maintained just long enough to allow the hydrogen in chamber **15** to flow back into container **51**, where it can be reabsorbed by the cool metal hydride **54**. Once the hydrogen is sufficiently removed from chamber **15** to re-enable the insulation panel **10**, as described above, the heating element **58** can be "turned off." Again, similar to the gas control apparatus **20** described above, this alternate gas control apparatus **50** requires consumption of power and creation of heat only during transition between enabled and disabled modes of compact vacuum insulation panel **10**.

Of course, partial disablement of the insulation panel **10** can be accomplished according to this invention by heating the metal hydride **54** only enough to release sufficient hydrogen to partially disable the insulative effect of the vacuum in chamber **15**. Such partial heating of the metal hydride **54** can be accomplished by limiting the time that the heating element **21** or **57** is powered to only the time necessary to release the desired amount of hydrogen. Consequently, the insulative effect of panel **10** can be set anywhere between its fully enabled or its fully disabled conditions by controlling the extent to which the metal hydride is heated.

Suitable metal hydride **24** or **54**, such as zirconium hydride, is available commercially in pellet form and is satisfactory for the purposes of this invention. In a sample compact vacuum insulation panel **10** with overall dimensions of 0.5 m×0.5 m with 0.5 mm sidewalls **12**, **14** spaced about 2.5 mm apart, fully reversible, repeatable and controllable variations in thermal resistance over a range of less than 0.2 to more than 0.7 m^2 K/W (1.1° to 4° F. $ft.^2$ hr/Btu) were measured. Higher maximum thermal resistances, such as in the range of 3.5 m^2 K/W (20° F. $ft.^2$ hr/Btu) are expected for larger panels with improved design parameters and features, such as the thin foil edge seals **66** (FIG. **3**).

The thickness of the chamber **15** of the vacuum insulation panel **10** dictates the critical pressure, P_c, of hydrogen needed to saturate the gas-phase conductance and thereby inactivate or disable the insulative effect of panel **10**. For example, for a panel **10** with a gap of 3 mm between sidewalls **12**, **14**, this critical hydrogen pressure is about one pascal or 10^{-5} atmospheres (7.5×10^{-3} torr). The critical pressure, P_c, can be reached by heating the metal hydride **24** or **54** to a temperature at which it is in thermodynamic equilibrium with hydrogen at the critical pressure, P_c, as illustrated in FIGS. **13** and **14**. For example, with a value of x=0.01 in the ZrH_x hydride, the hydride disassociation temperature required is nearly 600° C., whereas for x=0.1, the required disassociation temperature is only about 450° C. As the hydrogen is evolved from the hydride, the value of x decreases, and, consequently, so does the equilibrium hydrogen pressure that can be sustained by the hydride at the disassociation temperature. Therefore, the value of x for the ZrH_x must be selected somewhat higher than the final value at the hydride operating temperature.

Enough hydride must be used to provide the required amount of hydrogen, x, in the hydride large enough to remain above the critical value associated with the critical hydrogen pressure, P_c, at the hydride operating temperature. However, the amount of hydride is not dependent on the thickness of the chamber **15**, because the critical pressure is inversely proportional to the chamber **15** thickness between sidewalls **12**, **14**, while the volume of hydrogen at the critical pressure is directly proportional to chamber **15** thickness. These two parameters cancel each other to make the amount of hydride required independent of chamber **15** thickness.

A graphical illustration of the steps to follow in selection of design parameters for a compact vacuum insulation panel **10** leading to the determination of the amount of hydride required per unit area of the panel **10** is shown in FIG. **15**.

More or less hydride alloy can be used, depending on how high an operating temperature is chosen for the hydride and how large a value of $x_{initial}$ is used. However, operating at higher temperatures may cause other design problems, such as excessive heat loss from the hydride, and the use of too high a value of $x_{initial}$ might risk hydride degeneration due to embrittlement. Therefore, the design of the hydride component requires judicious selection of these parameters.

The variable emissivity coating **170**, as mentioned above, can be either for passive, i.e., designed for reactive, automatic response to changes in the temperature of the environment to be insulated with compact vacuum insulation panel **10**, or they can be active, i.e., controllable externally as desired by the user, to enable and disable the insulative effect of panel **10**. Both of the passive and active applications, however, utilize materials that have the characteristic of variable emissivity, i.e., variable emission of radiation, primarily infrared radiation, as a function of temperature. For example, a thermochromic material, such as vanadium oxide, exhibits high thermal emittance characteristics when it is in an electrically insulating state. Conversely, when in a metallic state, vanadium oxide has a low emittance. Vanadium oxide changes from the emissive, electrically insulating state to the non-emissive, metallic state as a function of temperature. When it is hot, it becomes more emissive, and when it cools, it becomes less emissive. Vanadium oxide can be doped to vary through a full range of emissivity, from about 0.05 to about 0.8, within about five degrees celsius (5° C.) temperature change.

Therefore, when vanadium oxide is coated on a surface of a sidewall **12** of the compact vacuum insulation panel **10**, as shown in FIG. **6**, it forms a variable emissivity coating **170**. When there is little heat **100** adjacent sidewall **12**, the temperature of the sidewall **12** is relatively low, and the corresponding emissivity of coating **170** is also low, thereby effectively inhibiting heat transfer by radiation across evacuated chamber **15** from sidewall **12** to sidewall **14** by infrared radiation. However, as more heat **100** builds up adjacent sidewall **12**, the coating **170** becomes more emissive and radiates more heat, thus causing the panel **10** to become less insulating. Consequently, in the transition temperature range designed into the variable emissivity coating **170**, the compact vacuum insulation panel **10** is effectively disabled or "turned off" as an insulation panel.

Of course, an artificial heating device, such as an electric coil (not shown) adjacent or even in the sidewall **12** could be used to actively heat or not heat, thus control, the emissivity of coating **170** for active selection of enabled or disabled insulative effect of panel **10**. The more the coating **170** is heated, the hotter, thus more emissive it becomes, so it can be controlled in this manner to vary the insulative effect of panel **10** or to set it anywhere between its maximum enabled or disabled limits.

As mentioned above, it may be beneficial to not provide any low emissivity coating on the opposite sidewall **14**, which could work to reflect and thereby offset the increased radiative thermal transfer obtained by increasing the emissivity of the coating **170** on sidewall **12**. Other thermochromic materials besides vanadium oxide could also be used for variable emissivity coatings that enable and disable compact vacuum insulation panel **12** in response to temperature changes. For example, titanium oxide (Ti_2O_3), nickel sulfide (NiS), and vanadium oxy fluoride ($VO_{2-x}F_x$) are also actively thermochromic and would be suitable materials for use as variable emissivity coating **170**.

An alternative variable emissivity coating **190**, as shown in FIG. **16**, may include an electrochromic material **193**, such as nickel hydroxide ($Ni(OH)_2$) or tungsten trioxide (WO_3), which changes its emissivity in response to application of an electric potential. Such an electrochromic, variable emissivity material may be more desirable than a thermochromic material described above for active control of emissivity, since electric potential is so easy to control.

Referring now to FIG. **16**, the variable emissivity coating **190** on the inside surface of sidewall **12** of panel **10** comprises a counter electrode or ion storage layer **191** deposited onto the inside surface of metal sidewall **12**, a layer of electron-blocking, ion conductive material **192** deposited on the counter electrode layer **191**, and the layer of electrochromic material **193** is, in turn, deposited onto the ion conductor layer **192**. Finally, a layer of electrically conductive material **194** is deposited on the electrochromic material **193** in the form of a grid, as illustrated in FIGS. **16** and **17**. The portions of electrochromic material **193** that are not covered by grid **194** are exposed to, or facing, the opposite sidewall **14**.

The electrochromic layer **193** changes from a colored, low emissivity state to a bleached, high emissivity state in response to a low voltage, DC current flow through the low emissivity coating **190** between sidewall **12** and grid **194**. Therefore, the emissivity of coating **190** can be controlled and varied anywhere between a very low emissivity condition to a very high emissivity state by controlling the application and polarity of electrical potential across the variable emissivity coating **190**.

Upon application of the electric potential in one polarity, ions are driven from the electrochromic material **193**, whereupon the electrochromic material either becomes colored (low emissivity) or bleached (high emissivity), depending on the electrochromic material being used. The ion conductive layer **192** effectively blocks electron flow while allowing ion migration, and the counter electrode or ion storage layer **191** receives and retains ions. The ion migration stops as soon as the electric potential is turned off, so the electrochromic material can be set at almost any variation between its high emissivity and its low emissivity limits by switching off the electric potential. The ion migration can be reversed to flow back into the electrochromic layer **193**, thus inducing it to change its emissivity in the opposite direction by applying an electric potential of reversed polarity long enough to drive the ions back into the electrochromic layer **193**. Of course, application of the reverse polarity for a time less than that required to completely change the emissivity from one limit to the other results in partial change of emissivity, thus allowing the user to select the extent to which the insulation panel **10** is enabled or disabled. Once a desired emissivity has been reached, it will retain that emissivity for practical purposes as long as there is no electric potential applied across the coating **190**. Therefore, as in other embodiments described above, electric power is required only during transition from one emissivity to another, but not to hold the coating **190** at any selected emissivity.

As mentioned above, suitable electrochromic materials for layer **193** include nickel hydroxide ($Ni(OH)_2$) and tungsten trioxide (WO_3), which can be selected and prepared to switch or vary emissivity predominately in the infrared portion of the spectrum. The ion conductor layer **192** may be lithium nitride (Li_3N), and the counter electrode **191** can be either molybdenum oxy fluoride (MOO_2F_2) or tungsten oxide (WO_x).

The reversible electric potential can be supplied by a DC power source **180** selectively connectable to metal sidewall

12 via lead **181** and to grid **194** via lead **182**. A switch **183** with two contacts **184**, **185** connected respectively to leads **181**, **182** can be used to connect the positive pole of source **180** to lead **182** and negative pole to lead **181** and, alternately, to connect the positive pole of source **180** to lead **181** and the negative pole to lead **182**. Since lead **182** is connected through a link **186** to grid **194**, those alternate positions **184'**, **185'** of switch **183** apply opposite polarity DC potential across coating **190** as when the contacts are in the **184**, **185** positions. The lead **182** extends through a mounting insert **187**, which is a ceramic-to-metal sealed insulator similar to the insert **40** described above, inserted through a hole **188** in sidewall **12** and sealed by a metal collar **189** welded around its edges to the sidewall **12** to maintain the vacuum tight seal. The electrically conductive grid provides even and thorough application across the surface of the electrochromic material **193**, while allowing substantial radiation surface of the electrochromic layer **193** uncovered by the grid **194** and exposed to the opposite sidewall **14**. Consequently, when the electrochromic layer is in its emissive state, there is still substantial exposed surface area from which to emit infrared radiation across the chamber **15**.

Thermal shorting switches in the form of bimetallic laminate switches **110** according to the present invention are also shown in the compact vacuum insulation panel **10** in FIG. **6** for turning the insulative effect of panel **10** "on" and "off." These bimetallic laminate switches **110** "turn off" the insulative ability of the panel **10** by establishing metal-to-metal contact between sidewalls **12** and **14** to create thermal short circuits, as described above. In the FIG. **6** embodiment, the switches **110** are positioned in sidewall **14** on the opposite side of panel **10** from the environment heat **100** that is supposed to be selectively confined or dissipated by the panel **10**. In this orientation, they are more suited to active control by a user or control device external to the panel **10**. However, they can also be positioned in the other sidewall **12** on the same side of panel **10** as the heat source **100**, where they can function more appropriately as passive or automatic thermal switches that turn the insulation panel **10** "on" and "off" in response to changes in temperature, as will be described in more detail below.

Referring now primarily to FIG. **6**, each bimetallic laminate switch **110** comprises a bulged portion or section **111** of the metal sidewall **14**. In FIG. **6**, the bulge **111** is shown as outwardly convex in shape. The bulged portion **111** is overlayed with a layer of a different metal **112** that has a different coefficient of thermal expansion than the metal of the sidewall **14** or bulge **111**. Therefore, the two metals **111** and **112** expand at different rates for each change in temperature. Since they are tightly laminated and adhered together so that they cannot slip in relation to each other, changes in temperature result in deformation of the bulge **111** due to differential expansion. For this application, the overlay metal **112** has a lesser coefficient of thermal expansion than the metal of sidewall **14**, so a rise in temperature causes the bulge **111** to snap to an alternate deformation that is concave to the panel **10**, as illustrated at **111'** in FIG. **6**. With appropriate sizing, the alternate deformed position **111'** of bulge **111** will contact sidewall **12** and thereby form a thermal short to conduct heat directly from sidewall **12** to sidewall **14**, as described above. The selection of the metal, thus coefficient of thermal expansion, in relation to the size of bulge **111** and coefficient of thermal expansion of the metal of sidewall **14** will determine the temperature at which the snap deformation to configuration **111'** will occur.

In the FIG. **6**, the panel **10** is shown equipped with an electrically resistive heating element **113** positioned adjacent the bimetallic switch **110** to provide a control heat source for causing the bimetallic switch **110** to snap to the alternate position **111'**. Of course, any controllable heat source would be satisfactory. The purpose is to provide an active control or device to establish a thermal short between sidewalls **12** and **14** on demand, thereby effectively "turning off" the insulative effect of the compact vacuum insulation panel **10**. Of course, such active control can also be used to "turn on" the insulative effect of panel **10** by operating in the reverse. In other words, if heating the bimetallic switch **110** "turns off" the insulative effect, turning off the heat source **113** and allowing the bimetallic switch to cool can "turn on" the insulative effect. Also, reversing the order of the laminate metals **111**, **112** can reverse the operation such that the heating element **113** turned off results in turning off the insulation and vice versa.

If the panel **10** is large, the thermal short at bimetallic switch **110** might be effective to "turn off" the insulation effect of panel **10** in the immediate vicinity of switch **110**, but not over the entire surface area of the panel **10**. While the metal sidewalls **12** and **14** are very good thermal conductors, they are not infinite thermal conductors. Therefore, it might be beneficial to provide additional bimetallic thermal switches **110** dispersed at spaced intervals from each other over the entire surface of the panel **10**, similar to those shown in FIG. **5** or as represented by bimetallic thermal switches **110**, **110'** in FIG. **6**. Additional heating elements similar to the heating element **113** can be provided for each of the bimetallic switches **110**, **110'**, but such provision might not be necessary, if the bimetallic switches **110**, **110'** are not positioned too far apart. Once the bimetallic switch **110** is actuated by the heating element **113** to invert the bulge **111** to the concave position **111'**, and the heat **100** starts flowing from sidewall **12** to sidewall **14**, the metal sidewall **14** will conduct heat to the next bimetallic switch **110'** and cause it to deform to the concave position **111"** as well. Being deformed to the metal-to-metal contact of concave position **111"**, the bimetallic switch **110'** thereby initiates a thermal short at that location also. If the plurality of bimetallic switches **110** are close enough to each other, this process can continue or cascade from one bimetallic switch **110** to adjacent ones over the entire surface of the compact vacuum insulation panel **10**, thereby switching the insulative effect of panel **10** "off" in a very positive and effective manner until there is insufficient heat **100** left to keep the bimetallic switches **110**, **110'** in their alternate or "unstable" positions. Upon cooling, they snap back to their stable, convex positions, thereby eliminating the metal-to-metal contacts and "turning on" the compact vacuum insulation panel **10**.

In a more passive or automatic mode application, as illustrated in FIG. **12**, the bimetallic switches **110** are positioned in sidewall **12** on the hot side of panel **10** where the heat **100** is located. In this kind of application, the bimetallic switches are actuated to switch to their unstable, concave positions **111'** by the heat **100** when it reaches a temperature where the bimetallic switches **110** are designed to switch and establish the metal-to-metal contacts or thermal short. They remain in the unstable, concave positions, effectively disabling or "turning off" the compact vacuum insulation panel **10** until the heat **100** is sufficiently dissipated or until the source of heat **100** is deactivated or removed. When the sidewall **12** cools enough to cause the bimetallic switches to snap back to their stable, outwardly convex positions, the metal-to-metal contacts between sidewalls **12**, **14** are broken, and the compact vacuum insulation panel **10** effectively "turned back on."

In an alternate embodiment bimetallic switch **120**, shown in FIG. **18**, the sidewall **12** has depressions **121** formed therein with flat bottoms **122** to maximize surface area of metal-to-metal contact with sidewall **14**. The different metal laminate **123** is overlayed on the curved rim **124** of the depression **121**. Therefore, a rise in temperature causes the bimetallic spring to snap to its unstable position **125**, causing the flat bottom **122** of depression **121** to make metal-to-metal contact with sidewall **14**. The resulting thermal short "turns off" the compact insulation panel **10** in the same manner as described above. Cooling of the heat **100** and sidewall **12** results in the bimetallic spring **120** snapping back to its stable position, thereby "turning back on" the compact vacuum insulation panel.

Another metal-to-metal switch embodiment **130** is shown in FIG. **19**. The switch and contact actuator is a metal element **131** in the shape of a coiled spring, and it comprises one of a class of metal alloys that can be plastically deformed in one temperature range and maintains the deformation until a certain other temperature range is reached. At that other temperature range, the element springs back to its original configuration **131** to establish metal-to-metal contact and "turn off" insulation panel **10**. Metal alloys that have the characteristic of accommodating and holding plastic deformation in one temperature range and then springing back to an original shape upon reaching a certain design temperature include metal alloys of titanium-nickel, copper-aluminum, and copper-aluminum-zinc.

In the FIG. **20** embodiment **140**, a spring **141** is positioned in cups **142**, **143** between sidewalls **12**, **14** to bias the sidewalls **12**, **14** apart. Intervening glass-like spacers **144**, **145** between spring **141** and sidewalls **12**, **14** prevent metal-to-metal conduction of heat **100** from sidewall **12** to sidewall **14** through internal spring **141**. External springs **146**, **147** are fabricated of a plastically deformable metal alloy such as those discussed above that spring back to an original shape upon reaching a certain temperature. They are positioned between relatively immoveable objects **148**, **149** and sidewalls **12**, **14**. In cooler temperatures where the external springs **146**, **147** are plastically deformable by internal spring **141** to the normal position illustrated in FIG. **18**. In this position, the compact vacuum insulation panel **10** is enabled or "turned on" to inhibit flow of heat **100** through panel **10**. However, when the heat **100** reaches a certain temperature, the external springs **146**, **147** spring back toward original positions that overcome the force of internal spring **141** and push the sidewalls **12**, **14** into contact with each other as indicated by the broken lines **12'**, **14'**. This metal-to-metal contact between sidewalls **12**, **14** disables or "turns off" the compact vacuum insulation panel **10**.

In another thermal shorting switch embodiment illustrated in FIGS. **21** and **22**, the metal-to-metal contact is made by a nonlaminated bimetallic switch **210**. This switch **210** is in the form of a concave dimple or depression **212** in one of the metal sidewalls **12** of panel **10**. The dimple **212** comprises a metal or metal alloy that has a higher coefficient of thermal expansion than the surrounding metal sidewall **12**. Consequently, as the respective metals of dimple **212** and sidewall **12** are heated, as by a heat source **100**, the metal comprising dimple **212** is effectively confined and restrained around its entire perimeter **214** by the metal of sidewall **12**. Since the metal comprising dimple **212** has a higher coefficient of expansion than the metal of sidewall **12**, it has to expand in a direction that is not constrained by the metal of sidewall **12**, which is in a direction normal to the plane of sidewall **12**, as illustrated by the broken line **212'** in FIG. **22**. Therefore, with sufficient heat **100** and sufficient expansion of the metal of dimple **212**, the dimple **212** will expand to the position **212'** where it makes metal-to-metal contact with the opposite sidewall **14**, thus creating the desired thermal short to "turn off" the insulated effect of the panel **10**. Cooling of the metal of dimple **212** will, of course, result in contraction of the dimple **212** away from sidewall **14**, thereby re-enabling the insulative effect of panel **10**. As in other thermal shorting switch embodiments described above, this switch **210** can also be actuated actively by a heating element (not shown) that can be turned "on" and "off" when positioned adjacent the switch **210**.

Another variation of thermal shorting switch **230** is shown in FIG. **23**, wherein a concave dimple or depression **232** is formed in a sidewall **12** of panel **10**. However, in this embodiment, the dimple **232** comprises the same metal as sidewall **12**, but it is confined at its edges by immoveable anchors **234**, **236** that are welded or otherwise affixed to sidewall **12**. As the metal of dimple **232** is heated by a heat source **100**, it expands. However, since it is confined at its edges by immoveable anchors **234**, **236**, the dimple will expand in a direction perpendicular to the plane of sidewall **12** toward the opposite sidewall **14**. With sufficient heat and expansion, therefore, the dimple **232** will expand to the position shown by broken line **232**, where it contacts the opposite sidewall **14** and creates a thermal short across the panel **10**. Upon cooling, the dimple **232** contracts away from sidewall **14**, thus re-enabling the insulative effect of panel **10**.

Still another metal-to-metal thermal shorting switch embodiment **240** is shown in FIG. **24**, which can be actively switched to turn the insulation back "on" after it is turned "off." In this embodiment **240**, a bimetallic bulge **241** similar to the bimetallic convex bulge of switch **110** discussed above is provided in one sidewall **12**. This bimetallic bulge comprises a metal **242** laminated onto the sidewall metal, with the metal **242** having a larger coefficient of expansion than the metal of sidewall **12**. Therefore, as it is heated the bimetallic bulge **241** snaps to the position **241'** shown in broken lines.

The convex bulge **241** also has a smaller concave bulge **243** in its center. When the larger bulge **241** is in the position **241'**, the smaller bulge **243** is positioned in contact with the opposite sidewall **14**, as shown by broken lines **243'**, to establish the metal-to-metal thermal short circuit. However, the smaller bulge **243** also comprises a bimetallic laminate of a metal **244** with a larger coefficient of thermal expansion laminate to a metal **245** with a smaller coefficient of thermal expansion on the outside. Therefore, when this smaller bulge is heated, as by a heater element **246**, the small bulge will deform to the bistable position **243"**, thereby breaking the metal-to-metal contact with sidewall **14**.

The metal-to-metal switch embodiment **150** comprises a bistable convex bulge **151** in sidewall **12**, which can be pushed with a button **152** to its alternate bistable position **151'** to establish the metal-to-metal contact with sidewall **14**. This embodiment provides a manual switch for turning the insulation panel **10** "off." It can be turned "on" by pulling the button **152** out again to break the metal-to-metal contact. Alternatively, if the convex bulge **151** is equipped with a smaller concave bimetallic bulge **153**, similar to the small, concave bimetallic bulge **243** in the FIG. **24** embodiment **240** and heater element **254**, turning on the heater element **254** can cause the smaller bulge **253** to snap to its alternate bistable position **253'** to break the metal-to-metal contact and "turn on" the insulation panel **10**.

As discussed above, the above-described embodiments that implement the mechanisms of turning "off" and "on" the

compact vacuum insulation panel **10** by alternately enhancing and inhibiting heat transfer by gas conduction, radiation, or metal-to-metal conduction according to this invention can be used either alone or in combination with one or more of those other embodiments. For example, the principal operative thermal transfer of panel **10** could be the gas control apparatus **10**. At the same time, a back-up or override system of bimetallic laminate switches **110** could also be provided to thermal short circuit the sidewalls **12**, **14** in the event the gas control apparatus **20** fails or is insufficient to dissipate an unexpected large heat build up. Other examples of beneficial combinations are legion, but are not necessary to describe for the purposes of this invention.

The foregoing description is considered as illustrative only of the principles of the invention. Further, since numerous modifications and changes will readily occur to those skilled in the art, it is not desired to limit the invention to the exact construction and processes shown as described above. Accordingly, all suitable modifications and equivalents may be resorted to falling within the scope of the invention as defined by the claims which follow.

The embodiments of the invention in which an exclusive property or privilege is claimed are defined as follows:

1. Dynamic compact vacuum insulation apparatus for variable inhibition of heat transfer from one environment to another, comprising:

two hard sidewall sheets of metal positioned in closely spaced apart relation to each other and sealed around their edges by metal-to-metal welds to form a chamber therebetween, said chamber being evacuated to an extent sufficient to substantially eliminate gas molecule conduction of heat from one of said sidewall sheets to the other:

a plurality of glass-like spacers positioned in said chamber between said sidewall sheets and spaced apart in relation to each other, said glass-like spacers being shaped to make contact with said sidewall sheets; and

disabling means for selectively and reversibly disabling the capability of said combination of sidewall sheets and evacuated chamber to inhibit heat transfer, said disabling means including thermal short switch means for creating a metal-to-metal thermal short circuit between said two sidewalls.

2. The dynamic compact vacuum insulation apparatus of claim **1**, wherein said thermal short switch means includes a bimetallic laminate device in one of said sidewalls that has a metal bridging component that is capable of bridging the distance between said two sidewalls across said chamber and that switches in response to a rise in temperature from a low temperature configuration in which said bridging component is not in metal-to-metal contact with the other of said sidewalls to a high temperature configuration in which said bridging component is in metal-to-metal contact with the other of said sidewalls.

3. The dynamic compact vacuum insulation apparatus of claim **2**, wherein said metal bridging component includes a bulge in said one sidewall that is outwardly convex and bulging away from said other sidewall in said low temperature configuration and which switches to a concave bulge in said high temperature configuration that bridges the distance between said two sidewalls into a metal-to-metal contact between said bulge in said one sidewall and said other sidewall.

4. The dynamic compact vacuum insulation apparatus of claim **3**, including a layer of material with a different coefficient of thermal expansion than the metal comprising said one sidewall laminated onto said bulge.

5. The dynamic compact vacuum insulation apparatus of claim **3**, including actuating heat means positioned adjacent said bimetallic laminate device for selectively heating said bimetallic device to actuate transition from said low temperature configuration to said high temperature configuration.

6. The dynamic compact vacuum insulation apparatus of claim **2**, wherein said metal bridging component includes a depression in said one sidewall that partially bridges the distance between said one sidewall and the other sidewall with curved portions of said one sidewall leading into said depression in a manner that forms a curved rim around said depression, and a layer of material with a different coefficient of thermal expansion than the metal comprising said one sidewall laminated onto said curved rim to deform said curved rim in a manner that forces said depression the remainder the distance across said chamber into contact with said other sidewall in response to a rise in temperature.

7. The dynamic compact vacuum insulation apparatus of claim **6**, wherein said depression has a flat surface that is positioned for contacting said other sidewall in response to said rise in temperature.

8. The dynamic compact vacuum insulation apparatus of claim **2**, including a plurality of said bimetallic laminate devices spaced apart in relation to each other in said one sidewall.

9. The dynamic compact vacuum insulation apparatus of claim **1**, wherein said thermal short switch means includes a metal device that is plastically deformable in a first temperature range and springs back to an original configuration upon reaching a second temperature range, said metal device being positioned to establish metal-to-metal contact between said two sidewalls when heated to said second temperature range.

10. The dynamic compact vacuum insulation apparatus of claim **1**, including bias means in said sidewalls for biasing said sidewalls away from each other and force means adjacent said sidewalls for selectively overcoming said bias means to force said two sidewalls into contact with each other.

11. The dynamic compact vacuum insulation apparatus of claim **10**, wherein said bias means includes a compression spring between said two sidewalls, and wherein said force means includes a device that applies a force to said sidewalls large enough to overcome the bias of said spring in response to a temperature change.

12. The dynamic compact vacuum insulation apparatus of claim **2**, wherein said device includes a metal object that is plastically deformable in a first temperature range and springs back to an original configuration upon reaching a second temperature range.

13. The dynamic compact vacuum insulation apparatus of claim **1**, wherein said thermal short switch means includes a depression in one of said sidewalls extending toward the other of said sidewalls and comprising a metal that has a larger coefficient of thermal expansion than the metal comprising said one sidewall.

14. The dynamic compact vacuum insulation apparatus of claim **1**, wherein said thermal short switch means includes a depression in one of said sidewalls extending toward the other of said sidewalls and immovable anchors affixed to said one sidewall adjacent the edges on opposite sides of said depression.

15. The dynamic compact vacuum insulation apparatus of claim **1**, including a convex bimetallic bulge in one of said sidewalls and a smaller, concave bimetallic bulge in said convex bimetallic bulge.

16. The dynamic compact vacuum insulation apparatus of claim **1**, including a bistable bulge in one of said sidewalls.

17. The dynamic compact vacuum insulation apparatus of claim **16**, including button means adjacent said bistable bulge for applying force to said bistable bulge to move said bulge from one bistable position to another.

18. The dynamic compact vacuum insulation of claim **16**, including a smaller bimetallic bulge in said bistable bulge and heater means for applying heat to said bimetallic bulge.

* * * * *