US005456205A

United States Patent [19]

Sheldon

[11] **Patent Number: 5,456,205**

[45] **Date of Patent: Oct. 10, 1995**

[54] **SYSTEM FOR MONITORING THE GROWTH OF CRYSTALLINE FILMS ON STATIONARY SUBSTRATES**

[75] Inventor: **Peter Sheldon**, Lakewood, Colo.

[73] Assignee: **Midwest Research Institute**, Kansas City, Mo.

[21] Appl. No.: **69,405**

[22] Filed: **Jun. 1, 1993**

[51] **Int. Cl.**[6] **C30B 25/16**

[52] **U.S. Cl.** **117/85**; 117/86; 117/108; 437/108

[58] **Field of Search** 117/85, 86, 108; 437/108

[56] **References Cited**

U.S. PATENT DOCUMENTS

4,318,769	3/1982	Sachs .	
4,634,490	1/1987	Tatsumi et al. .	
4,812,650	3/1989	Eckstein et al. .	
4,855,013	8/1989	Ohta et al. .	
4,931,132	6/1990	Aspnes et al. .	
5,096,533	3/1992	Igarashi .	
5,100,832	3/1992	Kitagawa et al.	437/106
5,122,222	6/1992	Turner et al.	117/85
5,200,021	4/1993	Kawai et al.	117/86
5,238,525	8/1993	Turner et al.	117/85
5,270,797	12/1993	Pollak et al.	356/417

OTHER PUBLICATIONS

G. W. Turner, et al. "Frequency-domain analysis of time-dependent reflection high-energy electron diffraction intensity data", 1990.

Primary Examiner—Robert Kunemund
Attorney, Agent, or Firm—Edna M. O'Connor

[57] **ABSTRACT**

A system for monitoring the growth of crystalline films on stationary or rotating substrates includes a combination of some or all of the elements including a photodiode sensor for detecting the intensity of incoming light and converting it to a measurable current, a lens for focusing the RHEED pattern emanating from the phosphor screen onto the photodiode, an interference filter for filtering out light other than that which emanates from the phosphor screen, a current amplifier for amplifying and converting the current produced by the photodiode into a voltage, a computer for receiving the amplified photodiode current for RHEED data analysis, and a graphite impregnated triax cable for improving the signal to noise ratio obtained while sampling a stationary or rotating substrate. A rotating stage for supporting the substrate with diametrically positioned electron beam apertures and an optically encoded shaft can also be used to accommodate rotation of the substrate during measurement.

20 Claims, 9 Drawing Sheets

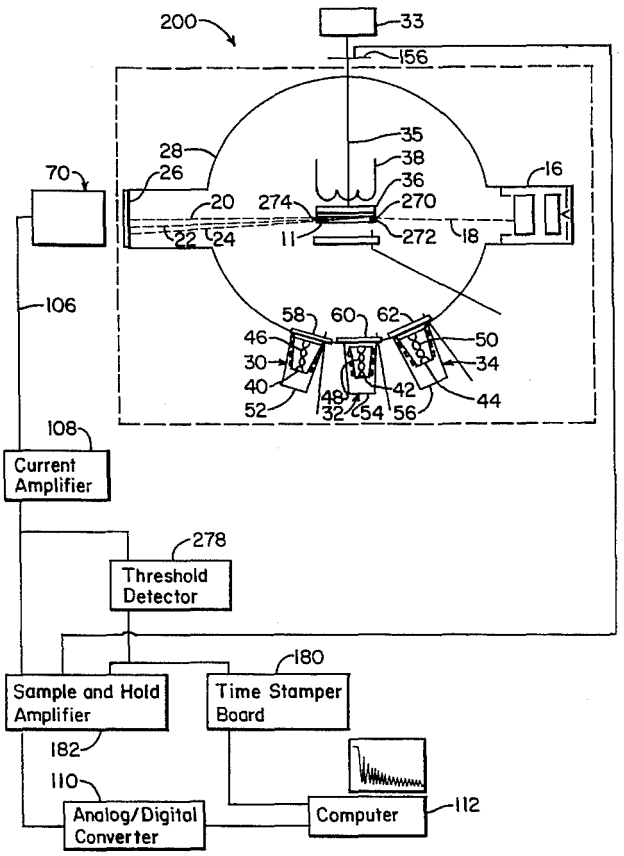

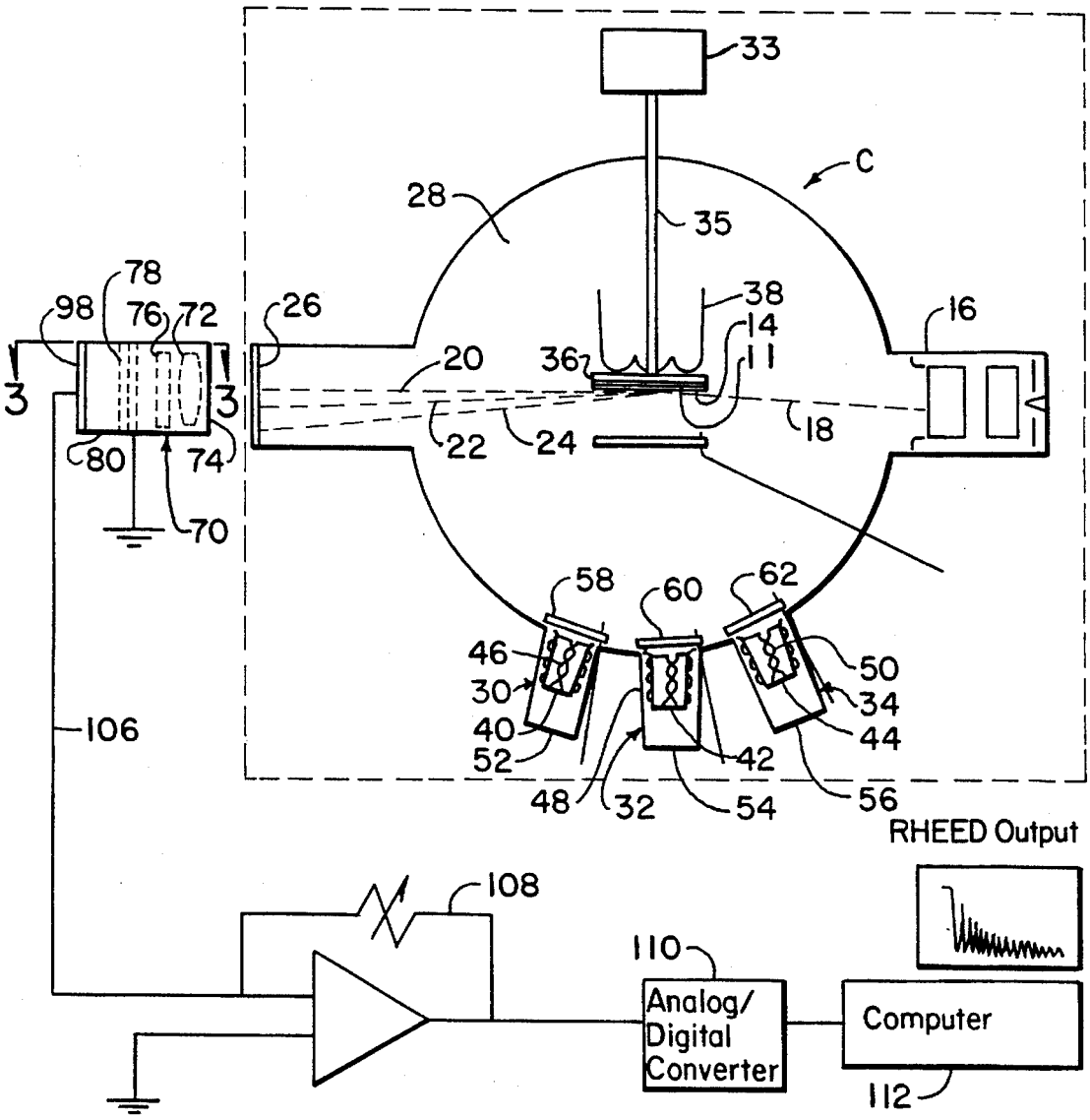
33
C
28
35
78
98
76
72
26
38
14
16
36
11
20
3
3
18
22
24
80
74
70
58
60
62
46
50
30
34
40
44
52
42
106
48
32
54
56
RHEED Output
108
110
Analog/
Digital
Converter
Computer
112

FIG. 1

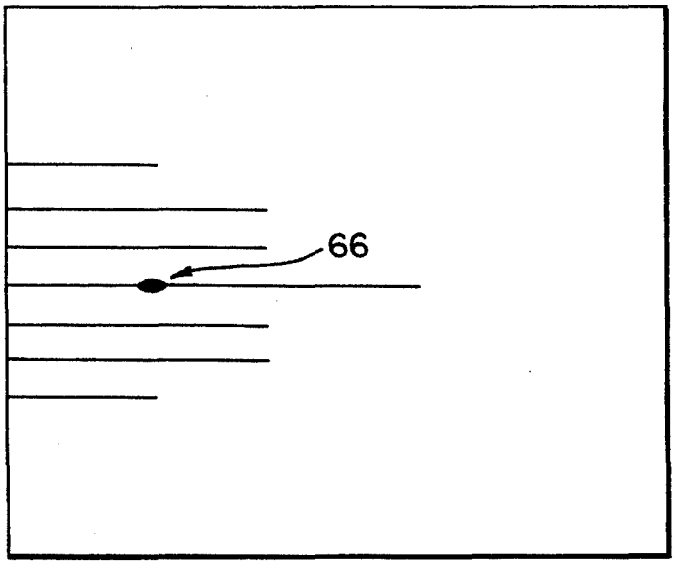
66

FIG 2

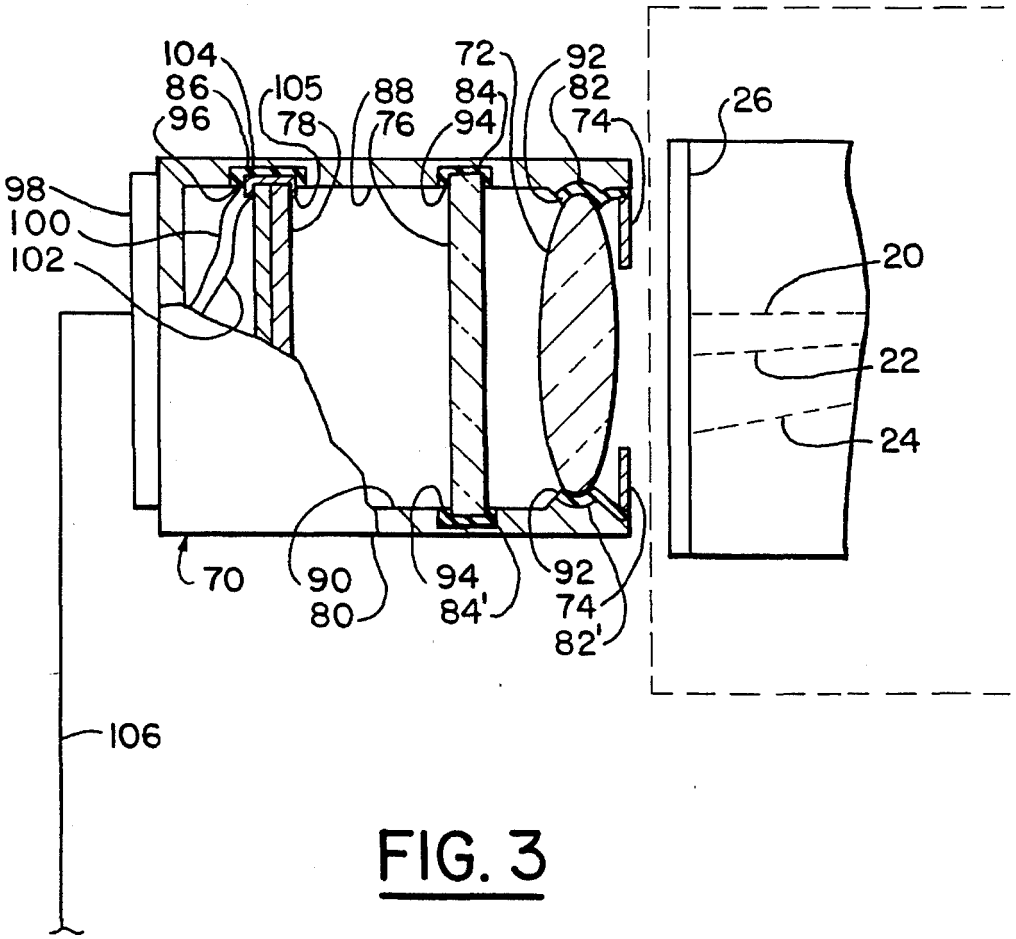
104
86
96
105
78
88
76
72
84
94
92
82
74
26
98
100
102
20
22
24
70
90
80
94
84'
92
74
82'
106

FIG. 3

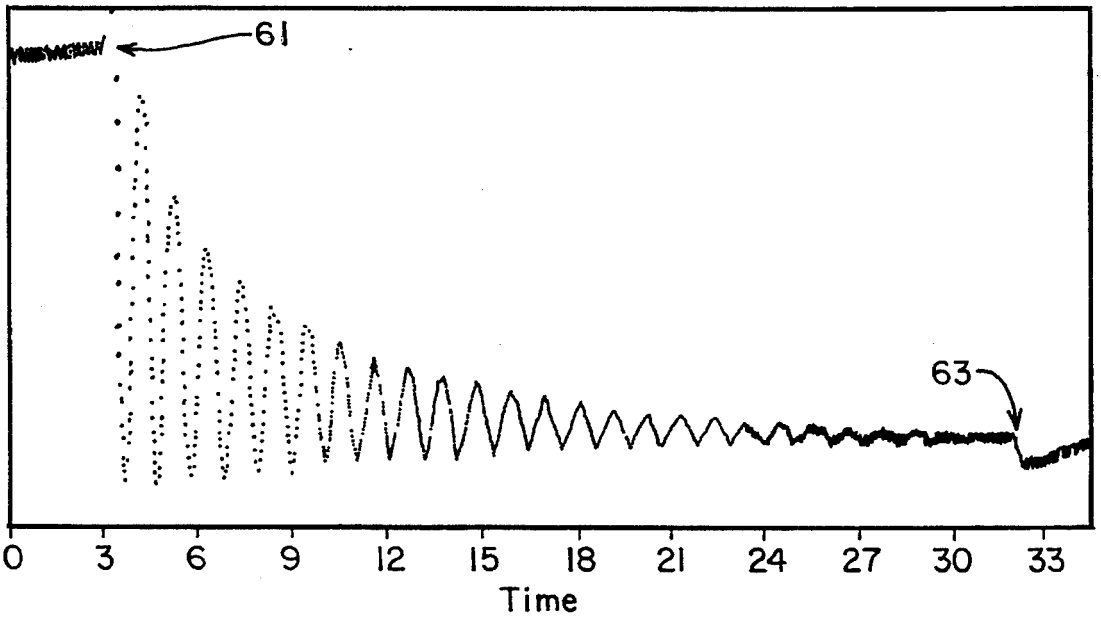
61
63
0
3
6
9
12
15
18
21
24
27
30
33
Time

FIG. 4

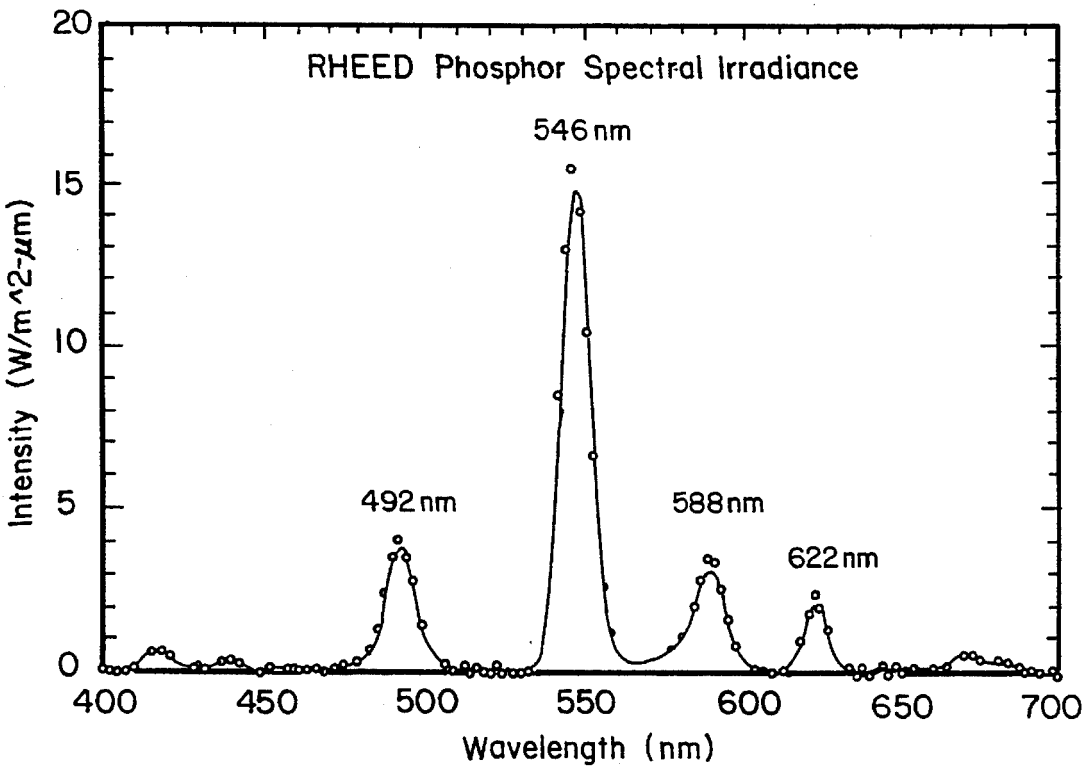
RHEED Phosphor Spectral Irradiance
546 nm
492 nm
588 nm
622 nm
Intensity (W/m^2-μm)
0
5
10
15
20
400
450
500
550
600
650
700
Wavelength (nm)

FIG. 5

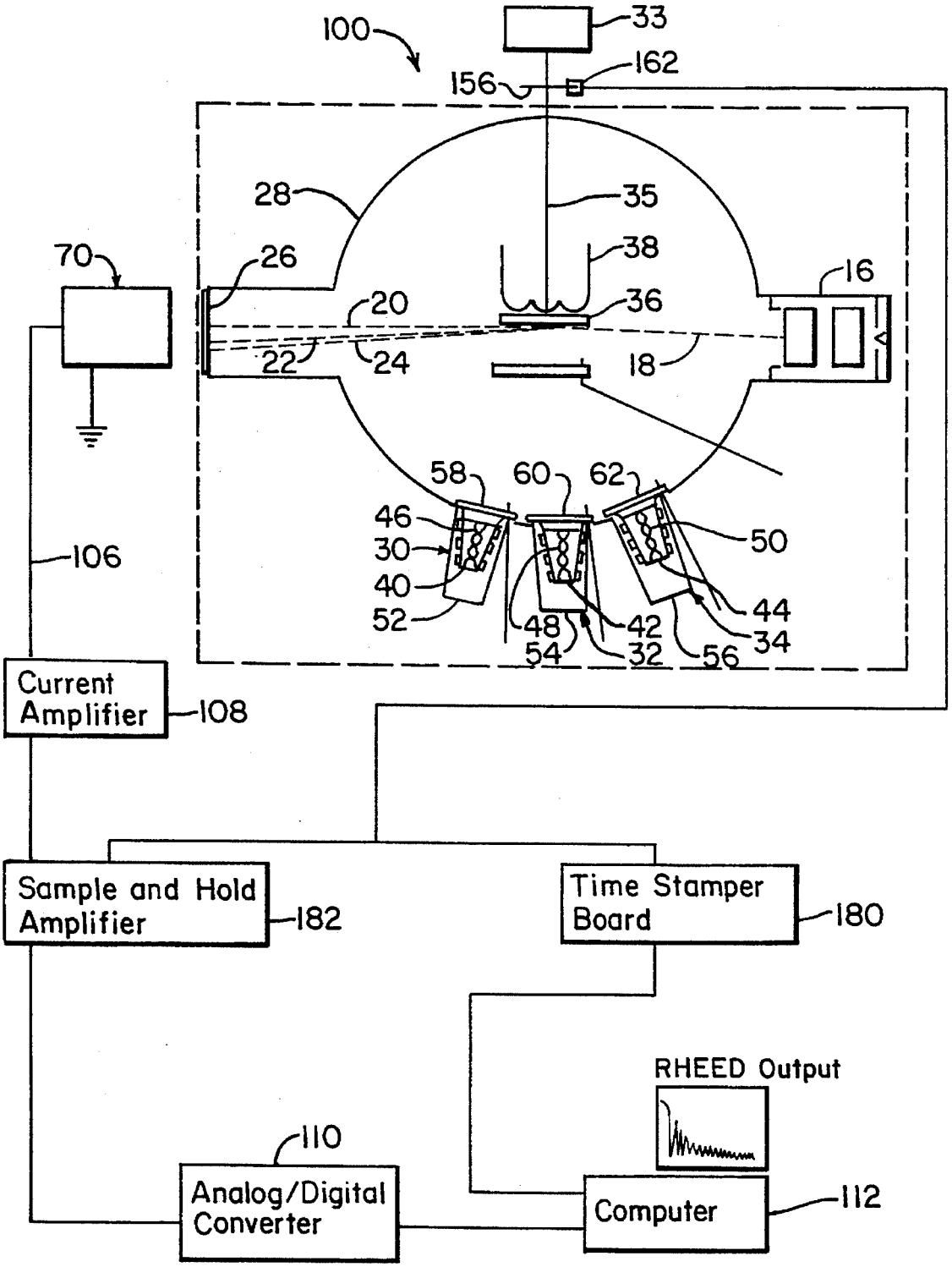
100
33
162
156
28
35
38
70
26
16
20
36
22
24
18
58
60
62
46
30
40
52
48
54
42
32
56
34
44
50
106
Current Amplifier
108
Sample and Hold Amplifier
182
Time Stamper Board
180
RHEED Output
110
Analog/Digital Converter
Computer
112

FIG. 6

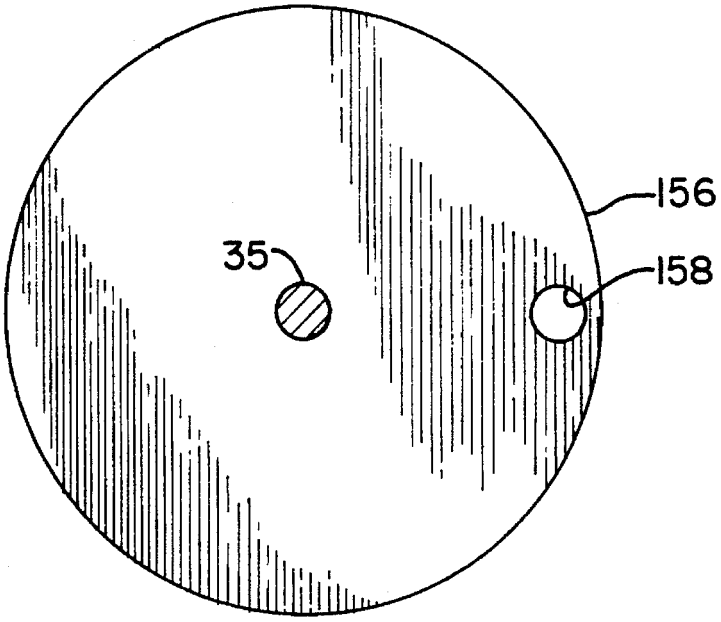

FIG. 7

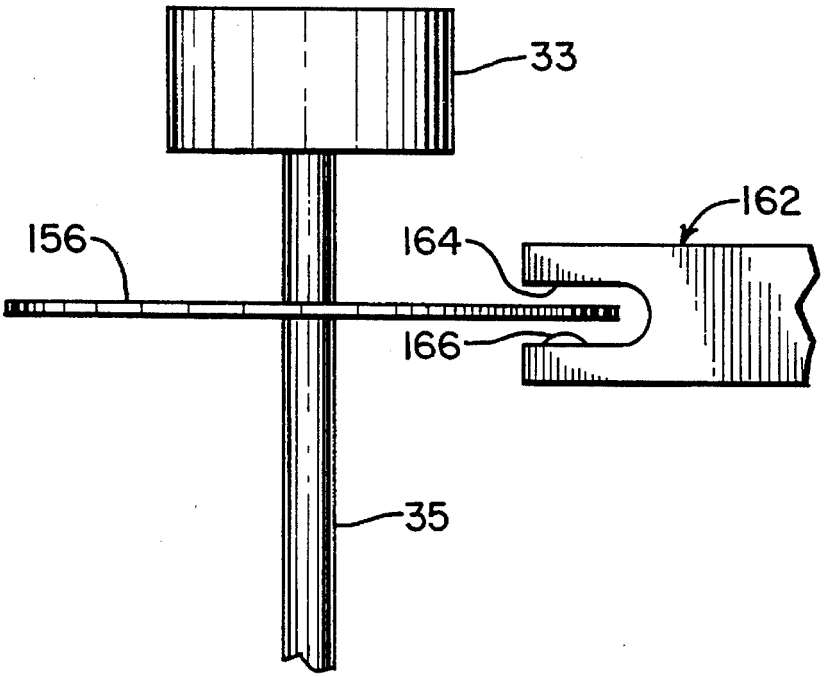

FIG. 8

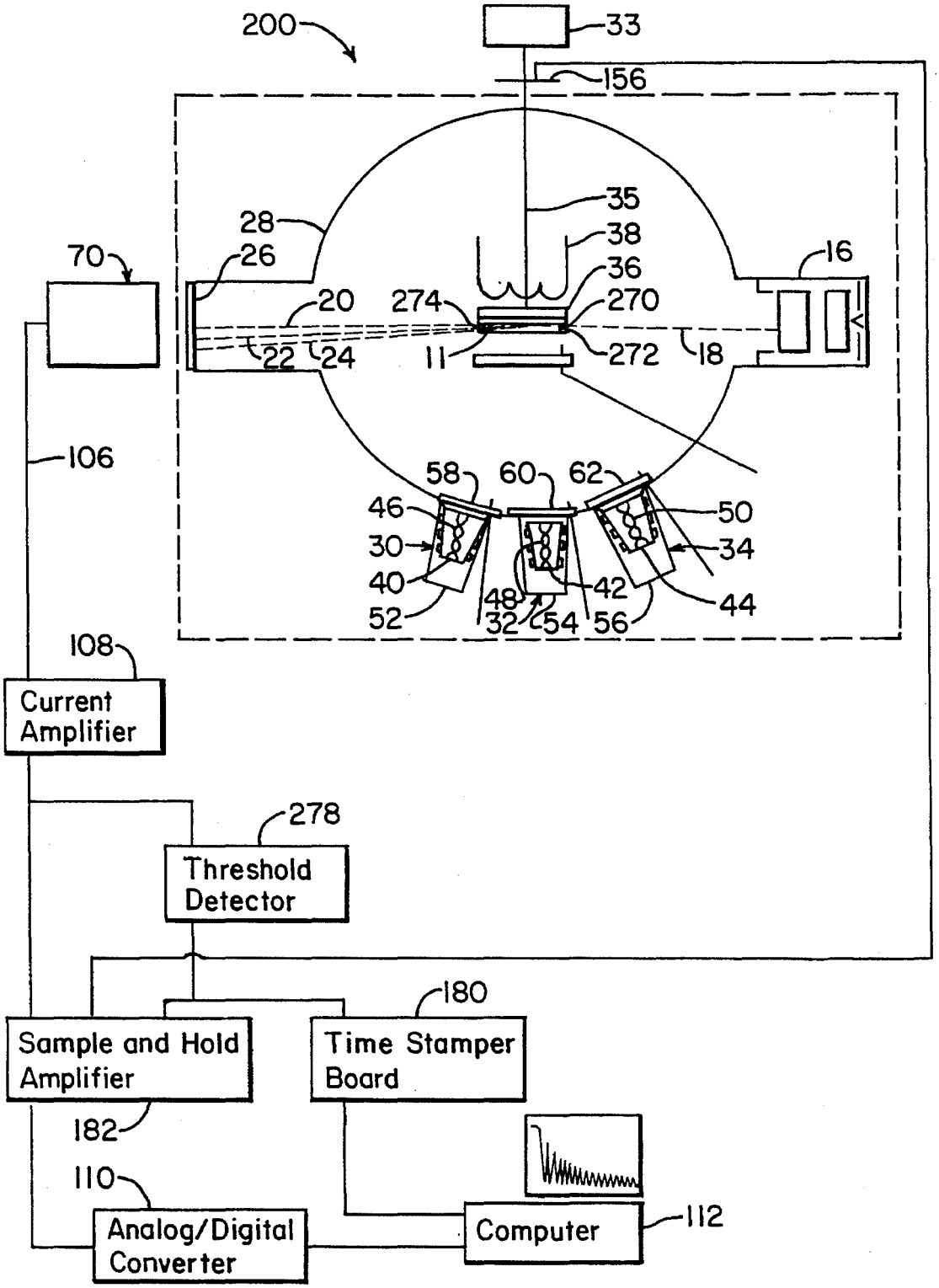
200
33
156
35
38
36
28
26
70
16
20
274
270
22
24
11
272
18
106
58
60
62
46
50
30
34
40
42
44
52
48
32
54
56
108
Current Amplifier
278
Threshold Detector
180
Sample and Hold Amplifier
Time Stamper Board
182
110
Analog/Digital Converter
Computer
112

FIG. 9

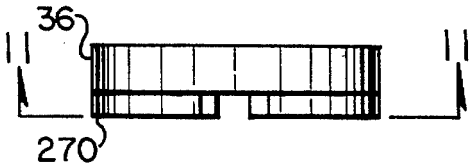

FIG. 10

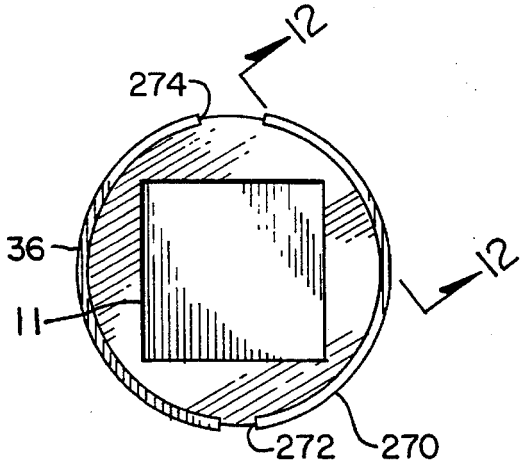

FIG. 11

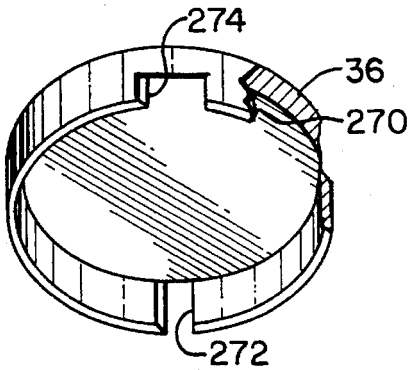

FIG. 12

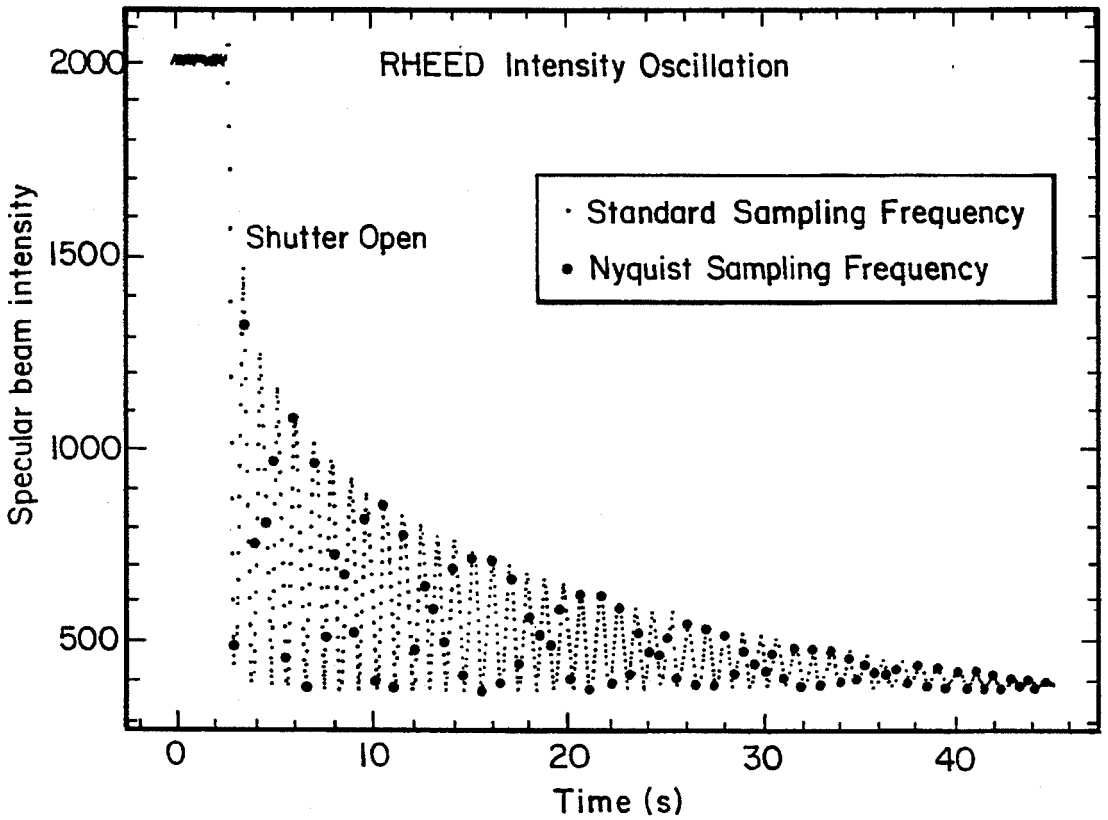

FIG. 13

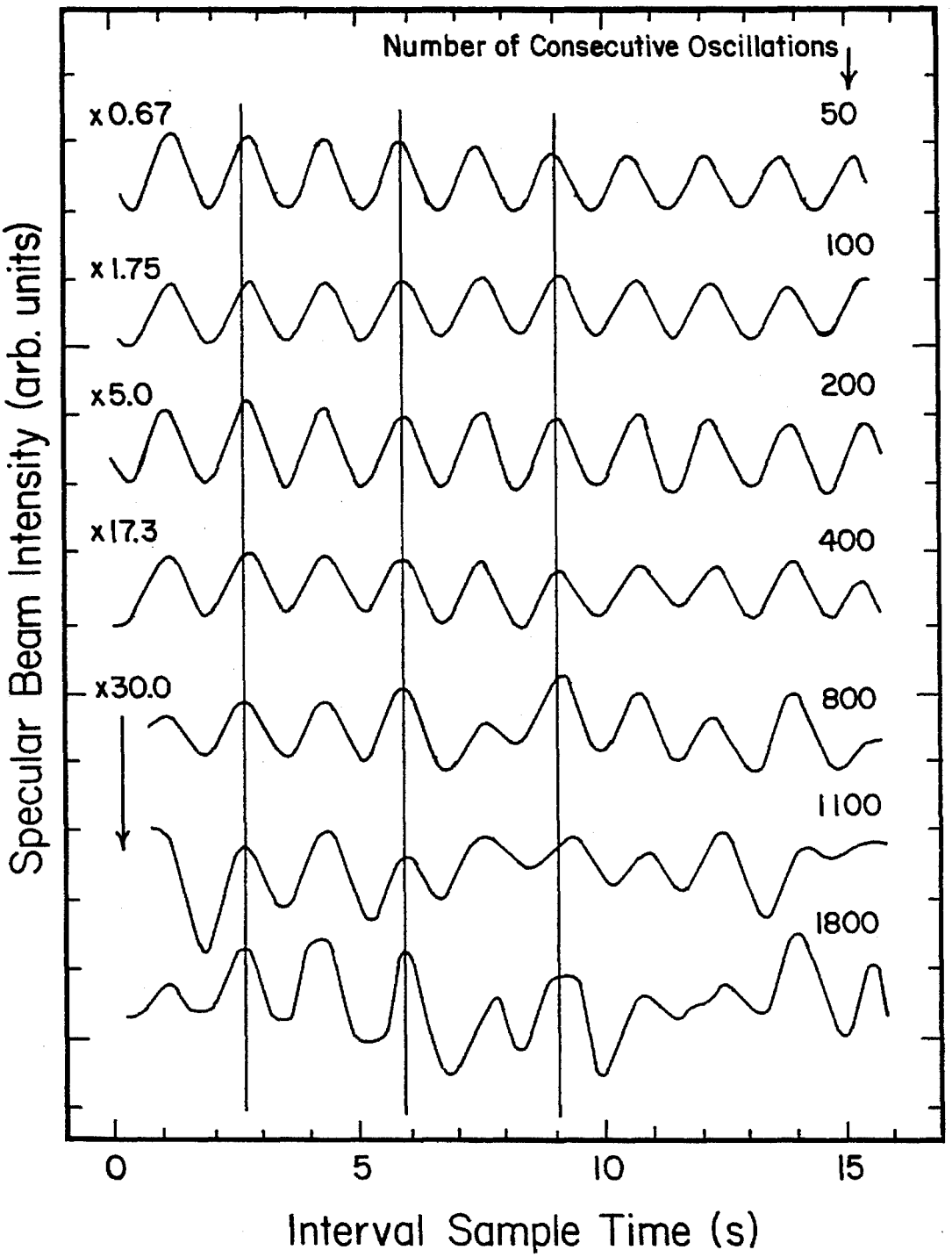
Number of Consecutive Oscillations
x0.67
50
x1.75
100
x5.0
200
x17.3
400
x30.0
800
1100
1800
Specular Beam Intensity (arb. units)
0
5
10
15
Interval Sample Time (s)

FIG. 14

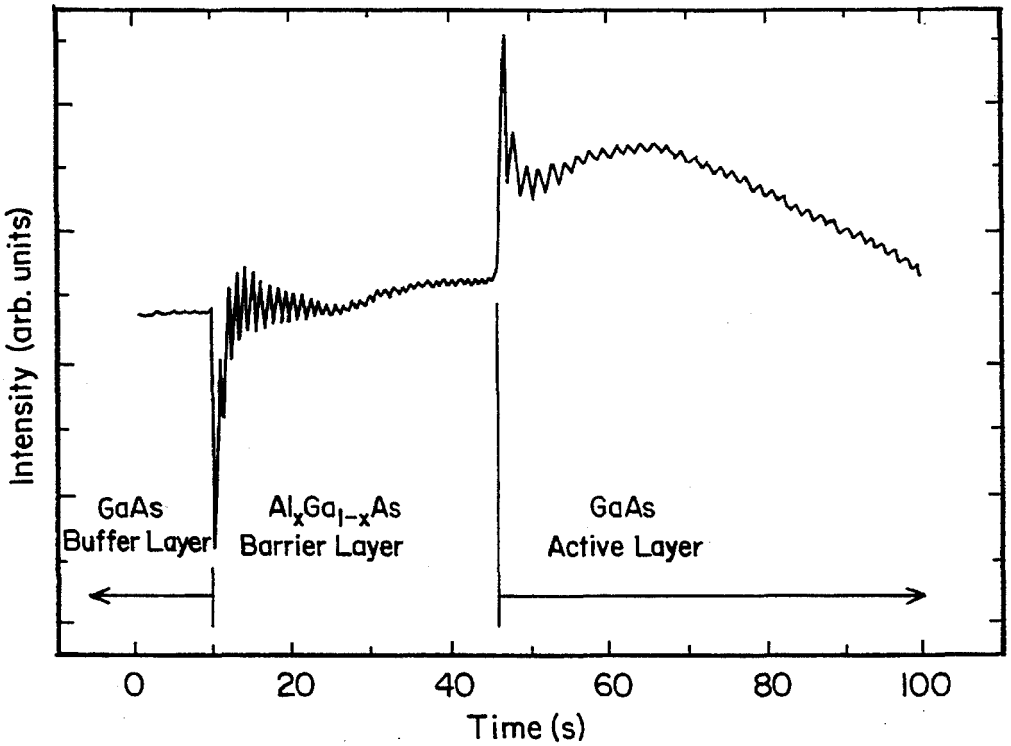
Intensity (arb. units)
GaAs
Buffer Layer
$Al_xGa_{1-x}As$
Barrier Layer
GaAs
Active Layer
0
20
40
60
80
100
Time (s)

FIG. 15

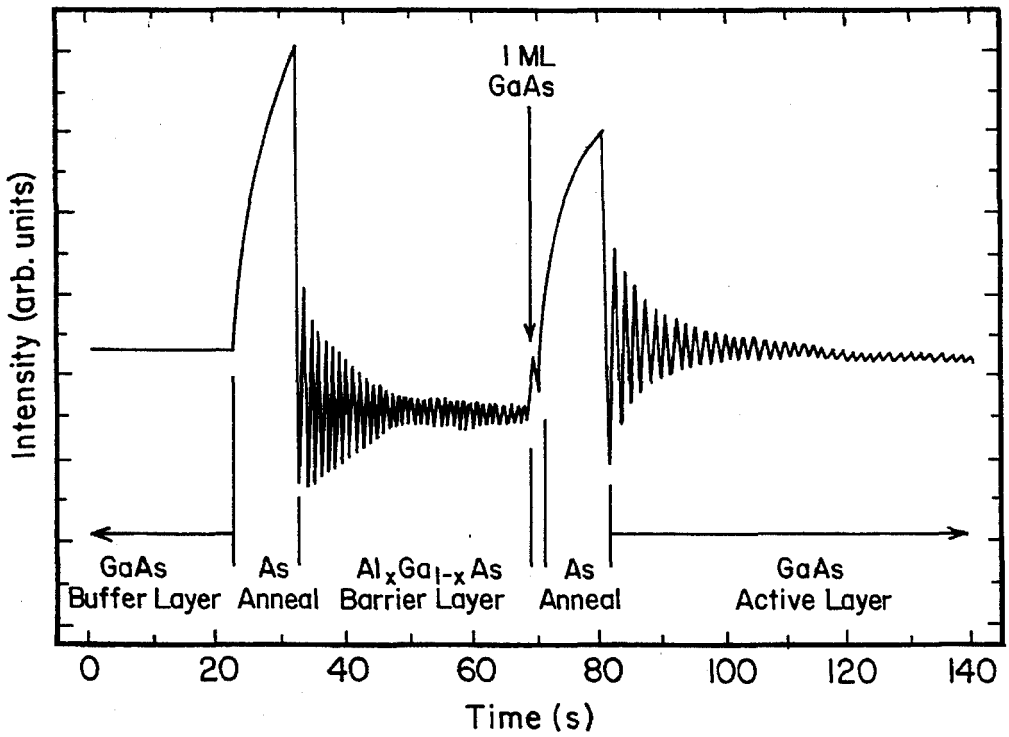
Intensity (arb. units)
1 ML
GaAs
GaAs
Buffer Layer
As
Anneal
$Al_xGa_{1-x}As$
Barrier Layer
As
Anneal
GaAs
Active Layer
0
20
40
60
80
100
120
140
Time (s)

FIG. 16

SYSTEM FOR MONITORING THE GROWTH OF CRYSTALLINE FILMS ON STATIONARY SUBSTRATES

The United States Government has rights in this invention under Contract No. DE-AC0283CH10093 between the U.S. Department of Energy and the National Renewable Energy Laboratory, a Division of Midwest Research Institute.

BACKGROUND OF THE INVENTION

1. Field of the Invention

The present invention relates to thin film deposition, and more particularly to a method and apparatus for monitoring the growth rate of single crystal films on stationary or revolving substrates, in which the thickness of the thin film is measured in terms of monolayer units.

2. Description Of the State of the Art

Molecular beam epitaxy (MBE) is a versatile, thin film growth technique used in preparing high-quality, single crystal thin film materials and structures for fundamental studies and for manufacturing electronic devices, such as semiconductors. In order to engineer and obtain precise quality control over thin film components of microelectronic devices for desired band gaps, doping, junction structure, and the like, it is necessary that the thicknesses of these films be precisely monitored as they are grown to a predetermined number of atomic layers or monolayers. Such thicknesses are usually discussed in angstrom units (Å), but the raw measurement can be made by monitoring the crystalline layers as they grow. Since it is known for each material, such as silicon, how thick each crystalline layer or monolayer is in angstrom units, monitoring and identifying each new crystal lattice layer as it is grown can provide the basis for calculating the overall thickness in angstrom units. Also, by determining the number of layers grown per unit of time and multiplying by the angstroms of thickness per monolayer can yield angstroms of growth per unit of time. Thus, the device can be designed by time of deposition with a particular constituent flux to yield the desired crystalline thickness in the film deposited. Consequently, accuracy within the range of one or two monolayers is needed.

There have been significant research efforts expended on developing real-time methods of determining and monitoring when a monolayer has in fact been deposited, and to thereby control the supply of the vapor phases of the materials being deposited.

Of the various methods developed for measuring the thickness of a crystalline film that is being grown on a substrate in a molecular beam epitaxy (MBE) chamber, a reflection high energy electron diffraction (RHEED) system is the most desirable. In a conventional RHEED system, a beam of high-energy (5 to 40 KeV) electrons is directed at the surface of the crystalline film growing in the MBE chamber at a grazing angle (one to two degrees to the plane of the surface). Because of the shallow incident angle, the electrons penetrate the surface of the growing crystalline film only a few atomic layers, and the resulting diffraction pattern of the electron beam is projected onto a phosphor screen positioned at the other side of the substrate. The projected pattern of electrons impinging the phosphor screen is therefore indicative of the crystalline surface, giving a measure of crystalline quality as well as a number of lattice conditions. It has further been established that once crystalline growth is initiated, there are oscillations in electron

impingement intensity on portions of the phosphor screen related to fractional changes in surface atomic coverage. These temporal oscillations correspond to the growth of crystalline layers of the film and, when plotted versus time, can show a growth rate of the thin film.

In appropriate conditions, the deposition of materials, such as GaAs or other III-V compounds, proceeds in a crystal growth model characterized layer by layer as the incoming flux condenses on the crystalline substrate, so the resulting RHEED output oscillations can be correlated to development or growth of individual monolayers of the film. This current model of crystal growth explains the RHEED pattern oscillation as well as inevitable dampening of the oscillations as the film grows thicker. Prior to deposition the equilibrium surface is assumed to be smooth, which equates with minimal surface roughness, thus maximum reflectivity. When growth is initiated, submonolayer coverage produces island-like clusters randomly deposited over the surface of the substrate forming a somewhat "rough" appearance. Consequently, where the starting smooth surface caused little scattering of the electron beam and a tight, intense pattern of electron incidence on a spot or location on the phosphor screen, the island-like crystals reduce reflectivity and tend to scatter the reflected electron beam. When the nascent crystalline layer is half-filled with atoms, the surface is at its "roughest," thus the reflectivity is at a minimum and electron beam scattering is at a maximum. The result is a decrease in intensity of electron incidence on that original projected spot or location on the phosphor screen. As more atoms are deposited and the monolayer nears completion, the roughness of the surface decreases again, and the resulting scattering of the incident electron beam also decreases. Therefore, the intensity of electron impingement on the original projected spot or location on the phosphor screen increases again. Consequently, a plot of intensity at the original projected spot on the phosphor screen versus time shows one oscillation of electron impingement intensity between two adjacent high values for each monolayer deposited. However, the surface of the newly deposited layer does not become entirely smooth, because the next succeeding layer often nucleates and starts to grow prior to the complete formation and lattice fill of the currently forming layer. Therefore, the intensity differential, detected on the phosphor screen, between the maximum and minimum in reflectivity gradually decreases after each successive layer, thus giving rise to a damping effect of each successive intensity oscillation. This cycle repeats itself over and over, giving rise to RHEED oscillations and the gradual damping of the same. Consequently, while one period of the intensity oscillation corresponds to exactly one monolayer, each successive oscillation becomes less pronounced and more difficult to detect or read. The result is that conventional RHEED oscillations are easy to detect and read for the first few crystalline layer formations; however, they rapidly become unreadable and useless for monitoring layer formation or crystalline growth.

There have been some apparatus and methods developed for monitoring the growth of thin films that do utilize RHEED oscillations, as described above. For example, G. W. Turner, et al. in a technical publication, entitled "Frequency-Domain Analysis of Time-Dependent Reflection High-Energy Electron Diffraction Intensity Data," J. Vac. Sci. Technol. B, Vol. 8, No. 2 pp 283–287, 1990, discloses a RHEED video system in which a video camera is focused on the phosphor screen. The video signal resulting from light produced by electron impingement on the phosphor screen is directed through a computer interface to a video monitor,

where the image of the light emanating from the phosphor screen is displayed and broken down into a matrix of pixels. The intensity of these pixels, which are directly related to the intensity of the light emanating from the phosphor screen, are then stored as a function of time. The Eckstein et al., patent, U.S. Pat. No. 4,812,650 discloses a method of monitoring oscillations obtained by measuring the current density of photoemitted electrons in-situ, produced by irradiating the crystalline film with a hydrogen/deuterium UV light source. U.S. Pat. No. 4,855,013, issued to Ohta et al., discloses an improved method of monitoring approximately 400 oscillations by way of a RHEED measurement system, thus, allowing the growth to be measured for the first 1000 Å of an AlGaAs alloy grown at an average growth rate of 5000 Å/hour.

The above technical paper and patents each have certain disadvantages, in regard to the combination of monitoring and growth techniques employed, as a trade off for certain advantageous features. For example, the video system utilized by Turner et al. has the advantage of being capable of monitoring the intensity of multiple light spots on the phosphor screen, thus electron diffraction patterns incident on the phosphor screen. However, it has a poor dynamic range, poor sensitivity, and poor signal to noise ratio, which results in a decrease in the number of oscillations, thus numbers of crystalline layers, capable of being monitored. Ohta et al. discloses a great improvement over the prior art in that the ability to monitor crystal growth was increased approximately ten fold. However, a relatively slow growth rate was employed (which enhances the number of observable oscillations). In addition, A1 containing alloys (such as AlGaAs) sustain oscillations for a longer period of time as compared to GaAs. Further, to minimize uneven crystal growth, the substrate should be rotated during the thin film deposition, but both Turner et al. and Ohta et al. require stationary substrates and cannot accommodate rotating substrates. Eckstein et al. did rotate the sample substrate for greater uniformity; however, they were not able to use a RHEED measurement system because of the rotation. Consequently, Eckstein et al. could only monitor the growth rate to approximately 28 Å.

There is still a need, therefore, for a system or technique for monitoring crystal growth by layers very accurately for larger thicknesses during higher growth rates than has been achieved by the prior art. There is also a need for a system that can make such measurements at such accuracies in such high growth rates, but which can also accommodate rotating substrates.

SUMMARY OF THE INVENTION

Accordingly, it is a general object of this invention to provide an improved method for monitoring crystal growth in a high vacuum system.

A more specific object of the invention is to improve the resolution and sensitivity of the oscillations measured, thereby enabling, monitoring and controlling the thickness of thin crystal film growth to larger thicknesses during higher growth rates.

Another specific object of this invention is to provide a system for monitoring crystal layer growth and higher growth rates through thicker growth ranges and that can also accommodate such measurements on a rotating substrate during MBE growth.

An additional object of the present invention is to monitor crystal growth on a rotating substrate while using a RHEED system.

Additional objects, advantages and novel features of this invention shall be set forth in part in the description that follows, and in part will become apparent to those skilled in the art upon examination of the following specification or may be learned by the practice of the invention. The objects and advantages of the invention may be realized and attained by means of instrumentalities, combinations, and methods particularly pointed out in the appended claims.

To achieve the foregoing and other objects and in accordance with the purposes of the present invention, as embodied and broadly described therein, the apparatus of this invention may comprise various combinations of some or all of the elements including a photodiode sensor for detecting the intensity of incoming light and converting it to a measurable current, a lens for focusing the RHEED pattern emanating from the phosphor screen onto the photodiode, an interference filter for filtering out light other than that which emanates from the phosphor screen, a current amplifier for amplifying and converting the current produced by the photodiode into a voltage, a computer for receiving the amplified photodiode current for RHEED data analysis, and a graphite impregnated triax cable for improving the signal to noise ratio obtained while sampling a stationary or rotating substrate. A rotating stage for supporting the substrate with diametrically positioned electron beam apertures and an optically encoded shaft can also be used to accommodate rotation of the substrate during measurement. The method of this invention may include synchronizing rotation of the substrate with intermittent sampling of the RHEED pattern, allowing a single measurement to be taken per revolution.

BRIEF DESCRIPTION OF THE DRAWINGS

The accompanying drawings, which are incorporated in and form a part of the specifications, illustrate the preferred embodiments of the present invention, and together with the descriptions serve to explain the principles of the invention.

In the Drawings:

FIG. **1** is a schematic view showing an MBE crystal growth apparatus equipped with the improved RHEED detecting system according to this invention;

FIG. **2** is an illustration of a typical RHEED diffraction pattern displayed as light emanating from a phosphor screen as used in this invention;

FIG. **3** is an enlarged elevation view of the housing of the improved RHEED detector system of this invention with portions cut away to reveal the operational components;

FIG. **4** is a waveform diagram plotting the intensity of the light irradiance emanating from the RHEED phosphor screen versus time to illustrate the oscillating and damping characteristics of the RHEED signals as well as the masking effect which stray background radiation has on useful data;

FIG. **5** is a plot of the spectral distribution of light emanating from the RHEED phosphor screen;

FIG. **6** is a schematic view showing a second embodiment crystal growth apparatus of the present invention having an optically encoded shaft attached to the atmosphere side of the substrate drive mechanism;

FIG. **7** is a plan view of the synchronization disc for mounting on a shaft;

FIG. **8** is a schematic view of the synchronization disc assembled together with the source/sensor module;

FIG. **9** is a schematic view showing a third embodiment

crystal growth apparatus of the present invention having an electron beam blocking rim around the perimeter of the sampling stage with an entrance and exit slot therein;

FIG. **10** is a side view of the substrate stage of FIG. **9** having an electron beam blocking rim;

FIG. **11** is a bottom plan view of the substrate stage and electron beam blocking rim of FIG. **10** showing the entrance and exit slots and the substrate where the crystal film is deposited;

FIG. **12** is a perspective view of the sampling stage;

FIG. **13** is a waveform diagram superimposing a Nyquest sampling frequency over a standard RHEED intensity oscillation illustrating that the Nyquest samples contain all of the information needed to quantify the original RHEED signal;

FIG. **14** is a waveform diagram illustrating, at various points in time, the variations in the amplitude of the intensity at the specular point in the diffraction pattern obtained during the growth of a film in one embodiment of the present invention;

FIG. **15** is a waveform diagram illustrating the one example of the RHEED intensity oscillations recorded during a portion of the growth of a GaAs/A1GaAs double heterostructure device; and

FIG. **16** is a waveform diagram illustrating one example of the RHEED intensity oscillations recorded during a portion of the growth of a GaAs/AlGaAs double heterostructure device having growth interrupts (arsenic anneals) at each of the heterointerfaces.

DETAILED DESCRIPTION OF THE PREFERRED EMBODIMENT

The crystal growth monitoring apparatus **10**, according to this invention, is shown in FIG. **1**, in combination with a conventional MBE crystal growth module C. Essentially, MBE is a straight forward deposition process in which thermally generated molecular or atomic beams of vaporous materials are deposited and crystallized on the surface of a suitably oriented substrate or wafer **11**. Monitoring the growth of this newly formed sample or thin crystal film **14** may be accomplished by use of an analytical instrument, such as a reflection high energy electron diffraction (RHEED) gun or electron gun **16**, which emits a beam **18** of high energy electrons directed toward the surface of crystal film **14** at a very low incident angle. The electron beam **18** is reflected off the surface of the substrate **11** in a more or less scattered pattern of diffracted high energy electron beams **20**, **22** and **24**, dependent on the surface reconstruction of the crystalline surface. The diffracted electron beams **20**, **22**, and **24** are projected to and absorbed by a phosphor screen **26**, and, as discussed in detail below, the projected RHEED pattern on the phosphor screen **26** is indicative of the various stages of growth of the crystal film **14**. A characteristic of a phosphor screen, such as the phosphor screen **26**, is that the electrons striking the phosphor screen **26** are absorbed and the energy is converted into light energy or photons that emanate from the phosphor screen and are visible. Furthermore, the intensity of the light energy emanating from any portion of the phosphor screen **26** is directly related to the intensity of the electrons impinging on that portion of the phosphor screen **26**. Therefore, the intensity of light emanating from a portion of the phosphor screen **26** can be monitored as an indication of the crystal growth, as will be described in more detail below.

Detector apparatus **70** positioned behind the phosphor screen **26** converts the light energy emanating from the phosphor screen **26** into an electronic signal or a current that can be measured. The more intense the light energy emanating from the phosphor screen **26**, the higher the current will be. Likewise the less intense the light energy, the lower the current will be. In the preferred embodiment of this invention, the current is conducted from the detector apparatus **70**, preferably via a graphite impregnated low noise triax cable **106**, into a Kiethley 427 current amplifier **108**, where the current is amplified and converted into a voltage which is proportional to the current. The 0–10 volt output of the current amplifier is directed into an analog to digital converter **110** that converts the voltage output of the amplifier **108** from an analog waveform into digital information for subsequent processing by a computer **112**, such as, for example a Macintosh IIx. The computer **112** utilizes a reflection high energy electron diffraction (RHEED) data acquisition and analysis software package to perform frequency-domain analysis of dynamic RHEED intensity data obtained during crystal growth by molecular beam epitaxy. This improved technique according to this invention allows useful growth rate information, which has been shown to be readable and useful clear out to 0.75 μm or 7500 Å of crystal growth at higher growth rates than has been available before.

In practice, a conventional crystal growth module C, shown in FIG. **1**, comprises a chamber **28**, source cells **30**, **32**, **34**, a substrate stage **36** for wafer **11** manipulation, and an analytical instrument, such as an electron gun **16**, for emitting a beam **18** of high energy electrons toward wafer **11** and phosphor screen **26**. A wafer or substrate **11** on which the crystalline thin film is to be deposited or "grown" is mounted on a substrate stage **36** located in the center of the growth chamber **28**. A heating element **38** is typically positioned adjacent sample stage **36** to maintain the substrate **11** at a desired process temperature for the thin film **14** that is being grown. A motor **33** connected to the stage **36** can be used to rotate the stage **36** and substrate **11** during deposition, which is often desirable or necessary to achieve a uniform growth of the crystalline thin film **14** on the substrate **11**.

Crystal deposition occurs as a result of molecular or atomic beams being generated by heating solid or source materials, such as Al, Ga, and As, placed in source cells **30**, **32**, and **34**, respectively, to temperatures that will produce the appropriate vapor pressures. Each source cell **30**, **32**, **34** may comprise an elongated pyrolytic boron nitride (PBN) crucible **40**, **42**, **44**, respectively, each of which contains one of the flux or vaporant materials, e.g., the Al, Ga, and As. Heating filaments **46**, **48**, and **50** adjacent or wound around crucibles **40**, **42**, and **44**, respectively, are used for heating the source materials to their respective temperatures by resistive heating. The source cells **30**, **32**, and **34** can also be surrounded by liquid nitrogen shrouds **52**, **54**, and **56**, respectively, that help reduce the thermal crosstalk between sources and vapor contamination. Shutters **58**, **60**, and **62** are movably positioned above source cells **30**, **32**, and **34**, respectively. The opening of shutters **58**, **60**, and **62** release the evaporant or flux in the respective cells **30**, **32**, and **34** in the form of a molecular or atomic beams (not shown), which migrate to and deposit on the surface of the substrate **11**. A suitable MBE chamber C with the features described above can be a model MBE-400, manufactured by Perkin-Elmer, Physical Electronics Division, of Eden Prairie, Minn., USA. The electron gun **16**, such as a model 06-190, manufactured by Perkin-Elmer, Physical Electronics Division, of Eden, Minn., produces a beam **18** of high-energy (5 to 10 KeV) electrons that are directed at the surface of the

growing thin film **14** on the substrate **11** at a grazing angle (approximately one or two degrees to the plane of the surface), and the resulting diffracted electron beams, such as the diffracted beams **20**, **22**, and **24** in FIG. **1**, are projected onto phosphor screen **26**.

Initially, when the electron beam **18** is reflected off the smooth surface of the substrate, there is little scattering or diffraction, so the specularly reflected electron beam impinges quite intensely and tightly on one spot or location on the phosphor screen **26**, thereby producing a fairly intense light emanating from that spot on the phosphor screen **26**. The initial spot may be, for example, the specularly reflected spot **66** on phosphor screen **26** illustrated in FIG. **2**. As the thin film **14** is deposited on substrate **1 1**, island-like fine crystals begin to grow in a cluster-like manner in random positions over the surface of substrate **11**, forming an incomplete monolayer that tends to scatter the electron beam **18**. When the nascent crystalline layer **14** is about half-filled with atoms, the surface is at its "roughest," thus the scattering is at a maximum, resulting in a decrease in intensity of the light emanating from the initial spot **66** on the phosphor screen **26** in FIG. **2**. As more atoms are deposited and the crystalline lattice or monolayer becomes complete, the roughness of the surface of the film **14** in FIG. **1** decreases, and the resulting scattering of the incident electron beam **18** also decreases, thus the intensity of light emanating from the initial spot **66** on the phosphor screen **26** increases again. This cycle repeats itself as each new crystal monolayer of film **14** grows on the substrate **14**, even though it dampens for each successive layer, as described above. Consequently, the waxing and waning of the intensity of light emanating from the initial spot **66** on the phosphor screen **26** is indicative of the phase of crystal growth of each new monolayer of the film **14** on substrate **11**.

Detector apparatus **70** according to the present invention is mounted behind the phosphor screen **26** to convert the RHEED diffraction variations into electrical signals. Essentially, the detector apparatus **70** is preferably focused to detect the intensity of light emanating from the phosphor screen **26** and to produce an electrical current corresponding to the variations of light intensity. Since the specularly reflected spot at location **66** of the diffraction pattern D on phosphor screen **26** has the brightest or most intense light emanating therefrom, and since the intensity of light emanating from that spot oscillates in relation to the growth of monolayers of the crystalline film, as described above, it is preferred, although not necessary, to monitor that spot or location **66**. To do so, only light emanating from that first spot or location **66** is focussed onto a photosensitive device or photodiode **78** to produce an electric current or instrumentation signal that varies in direct relation to the intensity of the light.

The detector apparatus **70** preferably, although not necessarily, comprises a 20× objective lens **72** having an integral aperture **74** for focusing on the selected light spot **66** of the RHEED diffraction pattern D on the phosphor screen. **26**. The detector apparatus **70** is preferably mounted on an x-y translation stage so that it can be moved in relation to the phosphor screen **26** to allow the lens **72** to capture the light image of the spot **66**. The objective lens **72** focuses the light emanating from phosphor screen **26** through a spectral selective filter **76** onto a photodiode **78**, which is preferably, although not necessarily, operated in the photovoltaic mode i.e., in the same manner as a photovoltaic cell, which produces a voltage and a current with an amplitude that is indicative of the intensity of the impinging photons (light energy) on its incident surface.

In the preferred embodiment illustrated in FIG. **3**, the detector apparatus **70** includes a body **80** for mounting and enclosing the objective lens **72**, interference filter **76**, and photodiode **78**. The detector body **80**, is preferably, although not necessarily, made of black anodized aluminum to absorb and suppress stray light. These individual components **72**, **76**, and **78** can be held in position by grooves **82**, **82'**, **84**, **84'**, **86**, and **86'**, which have been machined into the walls **88** and **90** of body **80**, and rubber inlays **92**, **94**, and **96**, respectively, for providing more support to the objective lens **72**, filter **76**, and photodiode **78**.

Stray background light, which may be collected inadvertently from room lights, ionization gauges in the system, oven filaments, and other sources can be collected by the lens **72** and focused on the photodiode **78**, in spite of the black anodized aluminum body **80**. Such background light can mask or interfere with useful data. An example of the effect of stray infra-red radiation on the intensity oscillations sampled at the reflection point in the RHEED diffraction pattern D is illustrated in FIG. **4**. For example, each "hot" oven contributes to the background level of infra-red radiation to a greater or lesser extent (dependent on temperature). In addition, there are a number of other sources of infra-red radiation, such as hot filaments associated with ionization gauges, the election gun, etc. Each of these sources produces infra-red radiation, which varies with time and contributes to the background light level sensed by the detector. The extraneous signals could be converted to electrical signals, which can mask the RHEED oscillations sought to be detected. In order to filter out effects of stray background infrared radiation, a bandpass filter **76** having a transmission window that matches the luminescence of the phosphor screen **26** is provided. The phosphor screen **26** spectral irradiance can be characterized, as shown in FIG. **5**, to show where the primary light wavelength emanating from the phosphor screen **26** exists. In the example of FIG. **5**, it is apparent that the primary light component has a wavelength in the range of about 546 nm. Using this information, a bandpass interference filter **76** centered at the wavelength of the principle useful light, i.e., about 546 nm, can be interposed between the objective lens **72** and the photodiode sensor **78**. Such a filter for this example could be a bandpass interference filter centered at 546 nm with a 10 nm half width available from ESCO Products, filter part no. **5915461**. Consequently, the only light capable of traversing interference filter **76** to be focused on the photodiode sensor **78** is that which is emitted from the phosphor screen **26** resulting from the RHEED diffraction pattern D.

Leads **100** and **102** originating from photodiode terminals **104** and **105**, respectively, are connected to the triax bulkhead connector (not shown), which receives a low-noise graphite impregnated triax cable **106** for relaying the current produced from of the photodiode **78** into the current amplifier **108**, thereby minimizing noise generated from the triboelectric effect. The amplifier **108**, as discussed above, outputs a voltage with a magnitude between 0–10 volts that is directly proportional to the current input, i.e., to the current produced by the photodiode **78**. The 0–10 V output of the current amplifier **108** is directed into the hybrid analog to digital converter **110** where the analog information is converted into digital information capable of being utilized by a computer **112**. The Macintosh IIx computer **112** is equipped with commercially available computer software, such as "National Instruments Lab Windows®," that is further described in the paper published by G. W. Turner et al., cited previously, can be used with appropriate modifications for particular system hardware and other parameters

that would be within the capabilities of persons skilled in this art. A RHEED data acquisition and analysis software package run by the Macintosh IIx computer **112** allows frequency domain analysis (via a fast Fourier transform routine) on the time dependent RHEED intensity data. This technique allows for time dependent RHEED oscillation information to be transformed into the frequency domain providing accurate growth rates even in cases where the signal to noise ratio is insufficient to allow for analysis by conventional means. As demonstrated in a later example, flux rate information of 7500 Å may be obtained. FIG. **14** illustrates data up to 5090 Å of growth material. The RHEED data acquisition and analysis software can include, for example, National Instruments Lab Window® as further described in the paper published by G. W. Turner et al., which was cited above. Appropriate modifications for particular system hardware and other parameters may be required, as is well within the knowledge and capabilities of persons skilled in this art.

An preferred alternate embodiment **100** shown in FIG. **6** may accommodate RHEED oscillation readings while rotating the substrate **11** on which the film **14** is being grown. In this proposed embodiment **100**, the stage **36** is mounted on an optically encoded shaft **35**. A substrate drive mechanism or motor **33** may be connected to the shaft **35** rotating the shaft **35** and stage **36**, thus rotating the substrate **11**.

The Nyquist sampling theorem depicted graphically in FIG. **13** states that if a band limited signal is sampled instantaneously at regular intervals and at a rate at least twice the highest significant message frequency, then the samples contain all of the information of the original signal. Typically MBE growth rates are on the order of about 1 μm/h, which corresponds to a RHEED oscillation frequency of about 0.98 Hz. Therefore, according to the Nyquist sampling theorem, the RHEED oscillations should be sampled at least two times per second so that significant information will not be lost. This sampling frequency corresponds to a substrate rotation speed of at least 120 RPM, assuming one sample per rotation.

Consequently, a synchronization disc **156**, shown in FIG. **7**, having a small opening **158** cut in the outer periphery, may be axially positioned on shaft **35**. An optical source/sensor module **162**, shown in FIG. **8**, is placed over the disc **156** to aid in the determination of when a single revolution of the substrate **11** is complete. For example, when the synchronization opening **158** passes through the source/sensor module **162**, light from the source **164** is passed through the opening **158** to a sensor **166**, which provides a short pulse or trigger signal indicating that a revolution is complete. The synchronization disc **156** can be mounted on and rotated with the shaft **35** and locked into position in such a way that the synchronization opening **158** is directly over the source/sensor module **162** at the point in time when a sample should be taken. The short pulse or trigger signal is sent to a sample and hold amplifier **182**. The sample and hold amplifier **182**, upon receiving the trigger signal, holds the value received from the current amplifier **108** until it can be transferred to the computer **112**. At the same time the trigger signal is sent to a time stamper board **180**, which records the point in time at which the signal was recorded. The information is then transferred to the computer **112**, providing it with the required time versus RHEED intensity data necessary for fast Fourier transform analysis.

In an alternate proposed embodiment **200**, shown in FIG. **9**, a thin electron beam blocking rim or shield **270** may be attached to the outer perimeter of sampling stage **36** to block the electron beam **18**, except at certain intervals. The blocking rim **270** shown in more detail in FIGS. **10–12**, has two diametrically opposed apertures **272**, **274** through which the election beam **18** can pass when they are aligned with the beam **18**. In such alignment, which occurs at one location or place in the substrate **11** and rim **270** rotation, the incoming electron beam **18** shown in FIG. **9** enters through the narrower aperture **272**, strikes the substrate surface **11**, and the resulting diffracted electron beams **20**, **22**, **24** may exit the wider aperture **274**. The diametrically opposed arrangement of apertures **272**, **274** provides for a self synchronized signal. For example, when the aperture **272** is in a position that allows the electron beam **19** to impinge on the substrate **11** and then exit through aperture **274**, the scattered beam **20**, **22**, **24** forms a substrate diffraction pattern D on the phosphor screen **26**. The current produced by the detector **70** when that alignment occurs is fed into a current amplifier **108** and converted to a voltage, which is significantly above some background level. The resulting voltage from the current amplifier **108** causes the threshold detector **278** to generate a trigger pulse, which is sent to the time stamper board **180**, for recording the event time, and to the sample and hold amplifier **182** for recording the RHEED intensity level, thus providing the computer **112** with the required time versus RHEED intensity data required for analysis in a self synchronized mode. This configuration could provide two signals per revolution, that is, the electron beam **18** may also enter after 180° rotation of the substrate **11** and rim **270** through the wider aperture **274**, and at least some of the scattered beam **20**, **22**, **24** can exit through the narrower aperture **272**. That occurrence can be ignored, however, by using the synchronization disc **156**, discussed above, send a signal to the computer **112** or to the sample and hold amplifier **182** to ensure that a sample current or voltage is recorded only at the proper orientation.

EXAMPLE

An example crystal growth monitoring apparatus **10** substantially as described above was set up and operated to observe MBE RHEED intensity oscillation results. A Perkin-Elmer MBE-400 system was used for the growth of GaAs, AlAs and AlGaAs on GaAs substrates. The GaAs substrates were prepared by thermally desorbing a chemically prepared oxide layer in vacuum. The Ga source fluxes were adjusted to give GaAs growth rates between 0.25–1.0 μm/h, and the Al fluxes were adjusted to give AlAs growth rates of 0.1–0.5 μm/h. The substrate temperatures during growth, were monitored by a thermocouple and optical pyrometer measurements ranged from 580° C. to 620° C. The RHEED image is generated with a standard Perkin-Elmer Physical Electronics RHEED gun operated at 10 KV. While the following data presented was obtained from a stationary sample, the data is theoretically representative of that obtained during sample rotation (as dictated by the Nyguist thereom). Data may be obtained for sample rotation by placing an optical source/sensor module **162** over the synchronization disc **156** having an axis defined by shaft **35**. The motor **33** may be varied in speed from 0 to 200 revolutions per minute.

The light image **66** obtained on the phosphor screen **26** is captured with the detector apparatus **70**, the intensity of image **66** is converted to a current by the photodiode **78**, which is directed into a current amplifier **108** via a graphite impregnated cable **106**. The resulting voltage is directed into the analog to digital converter **110**, where the analog data is converted to digital information. The digital information is directed into the computer **112** and analyzed. The software

package, described above, provides the capability for developing digital signal processing programs to accomplish such tasks as base line corrections to compensate for drift, digital filtering to remove undesired noise components, fast Fourier transform analysis, and power spectrum measurements.

FIG. **14** is a recorder trace of RHEED oscillations taken at various points in time during an uninterrupted growth run in which a GaAs think film was grown on a high quality GaAs substrate at 600° C. The oscillations are visually recognizable up to 1800 consecutive oscillations (about 0.51 μm). Past this point it is difficult to visually detect the oscillations, however, the fast Fourier transform analysis routine can extract the signal from the noise up to 2650 oscillations (about 0.75 μm). FIGS. **15** and **16** are of RHEED intensity oscillations recorded during a portion of the growth of a GaAs/AlGaAs double heterostructure device. As is clear from FIG. **15**, one period of oscillation of the intensity of the RHEED pattern corresponds to one monolayer, thus, the composition ratio x of the mixed crystal $Al_xGa_{1-x}As$ can be directly determined from the frequency of the oscillations. That is, when the oscillation frequency of both GaAs [f(GaAs)] and AlAs[f(AlAs)] is measured, the composition ratio x_1 is obtained from equation (1). Similarly, when the oscillation frequency of both GaAs[f(GaAs)] and AlGaAs [f(AlGaAs)] is measured, the composition ratio x_2, is obtained from equation (2).

$$x_1 = \frac{f(AlAs)}{f(GaAs) + f(AlAs)} \quad (1)$$

$$x_2 = \frac{f(AlGaAs) - f(GaAs)}{f(AlGaAs)} \quad (2)$$

Equation (1) gives the Al composition ratio x of the mixed crystal $Al_xGa_{1-x}As$ when the oscillation frequencies of AlAs and GaAs are known and AlAs and GaAs are simultaneously grown. Equation (2) gives the concentration of Al when the oscillation frequencies of AlGaAs and GaAs are known and AlGaAs and GaAs are grown.

Therefore, the method of the present invention has an advantage that the composition ratio can be determined at any time during the crystal growth out to about 0.75 [m. The composition ratio obtained according to the present invention can be obtained for a longer period of time than the prior art methods.

The crystal films from which the RHEED data was taken for FIGS. **15** and **16** are identical in structure; however, the crystal film in FIG. **16** had growth interrupts (arsenic anneals) at each of the heterointerfaces and the crystal film in FIG. **15** did not.

The foregoing description is considered as illustrative only of the principles of the invention. Furthermore, since numerous modifications and changes will readily occur to those skilled in the art, it is not desired to limit the invention to the exact construction and process shown as described above. Accordingly, all suitable modifications and equivalents may be restored to falling within the scope of the invention as defined by the claims which follow.

I claim:

1. A method for detecting intensity oscillations of a RHEED luminescent pattern on a screen that luminesces in response to impingement of electrons generated by an electron beam during growth of a crystalline film on a substrate, comprising of:

rotating said substrate and crystalline film;

surrounding said substrate with a shield that is impervious to an electron beam and has two diametrically opposed apertures that are not impervious to an electron beam,

directing an electron beam onto said substrate and crystalline film at an angle such that it may pass through one of said apertures, reflect off said crystalline film, and pass through the other of said apertures to said screen, and rotating said shield with said substrate and crystalline film:

selecting a spot of the RHEED luminescent pattern on the screen at which luminescent intensity can be detected;

transmitting light emanating from said spot onto a photosensitive device that produces an electronic signal in response to the impinging light and in such a manner that the electronic signal is indicative in real time of the intensity of the light emanating from said spot; and

processing said electronic signal to produce a reading of each oscillation cycle of intensity of the luminescent spot.

2. The method of claim **1**, including the step of focusing light emanating from said spot with a lens onto said photosensitive device.

3. The method of claim **2**, including the step of enclosing said lens, said spectral selective filter, and said photosensitive device in a black, light absorbing housing.

4. The method of claim **3**, including the step of producing said signal in the form of a current.

5. The method of claim **4**, including the step of amplifying said current.

6. The method of claim **5** including the step of producing a voltage that is indicative in real time of the magnitude of said current.

7. The method of claim **6**, including the step of converting said voltage to digital signals that are indicative in real time of the amplitude of said voltage and converting said digital signals into said reading.

8. The method of claim **1** including the step of detecting a revolution of said substrate and producing a trigger signal at the completion of the revolution, directing said trigger signal to a sample hold amplifier, and sampling said electronic signal with said sample hold amplifier in response to said trigger signal.

9. The method of claim **8**, including the step of providing said shield with one of said apertures smaller than the other of said apertures, and sampling said electronic signal only when the incident electron beam is passing through the smaller aperture and the diffracted electron beam is passing through the larger aperture.

10. The method of claim **9**, including the step of sensing the intensity of said electronic signal, directing said electronic signal to a sample hold amplifier when said electronic signal reaches a preselected threshold, directing said trigger signal to a sample hold amplifier, and sampling said electronic signal with said sample hold amplifier in response to said trigger signal.

11. A method for detecting intensity oscillations of a RHEED luminescent pattern on a screen that luminesces in response to impingement of electrons generated by an electron beam during growth of a crystalline film on a substrate, comprising the steps of:

rotating said substrate and crystalline film;

surrounding said substrate with a shield that is impervious to an electron beam and that has two diametrically opposed apertures that are not impervious to an electron beam;

directing an electron beam onto said substrate and crystalline film at an angle such that it may pass through one of said apertures, reflect off said crystalline film, and pass through the other of said apertures to said

screen;

rotating said shield with said substrate and crystalline film;

selecting a spot of the RHEED luminescent pattern on the screen at which luminescent intensity can be detected;

transmitting light emanating from said spot onto a photosensitive device that produces an electronic signal in response to the impinging light and in such a manner that the electronic signal is indicative in real time of the intensity of the light emanating from said spot;

sampling said electronic signal instantaneously in synchronization with a revolution of said substrate and crystalline film; and

processing said electronic signal to produce a reading of each oscillation cycle of intensity of the luminescent spot.

12. The method of claim **11**, including the step of focusing light emanating from said spot with a lens onto said photosensitive device.

13. The method of claim **12**, including the step of enclosing said lens, and said photosensitive device in a black, light absorbing housing.

14. The method of claim **13**, including the step of producing said electronic signal in the form of a current.

15. The method of claim **14**, including the step of amplifying said current.

16. The method of claim **15**, including the step of producing a voltage that is indicative in real time of the magnitude of said current.

17. The method of claim **16**, including the step of converting said voltage to digital signals that are indicative in real time of the amplitude of said voltage and converting said digital signals into said reading.

18. The method of claim **11**, including the step of detecting a revolution of said substrate and producing a trigger signal at the completion of the revolution, directing said trigger signal to a sample hold amplifier, and sampling said electronic signal with said sample hold amplifier in response to said trigger signal.

19. The method of claim **11**, including the step of providing said shield with one of said apertures smaller than the other of said apertures, and sampling said electronic signal only when the incident electron beam is passing through the smaller aperture and the diffracted electron beam is passing through the larger aperture.

20. The method of claim **17**, including the step of sensing the intensity of said electronic signal, directing said electronic signal to a sample hold amplifier when said electronic signal reaches a preselected threshold, directing said trigger signal to a sample hold amplifier, and sampling said electronic signal with said sample hold amplifier in response to said trigger signal.

* * * * *