US005426569A

United States Patent [19]

Sopori

[11] Patent Number: 5,426,569

[45] Date of Patent: Jun. 20, 1995

[54] **METHOD AND APPARATUS FOR SIMULATING ATOMOSPHERIC ABSORPTION OF SOLAR ENERGY DUE TO WATER VAPOR AND CO_2**

[75] Inventor: **Bhushan L. Sopori**, Denver, Colo.

[73] Assignee: **Midwest Research Institute**, Kansas City, Mo.

[21] Appl. No.: **206,933**

[22] Filed: **Mar. 7, 1994**

[51] **Int. Cl.**[6] **F21V 9/04**

[52] **U.S. Cl.** ..... **362/2**; 362/32; 362/96; 362/293; 362/299; 362/301; 362/346; 250/504 R; 359/358

[58] **Field of Search** ..... 250/493.1, 504 R; 359/350, 358; 372/11; 385/900; 362/1, 2, 32, 267, 293, 294, 96, 298, 299, 300, 301, 346

[56] **References Cited**

U.S. PATENT DOCUMENTS

H229	3/1987	Phillips	165/96
1,565,590	12/1925	Ritterrath	359/358
1,827,530	10/1931	Grand	600/21
3,171,027	2/1965	Wallack	359/358
3,334,217	8/1967	Bickler et al.	362/2
3,388,314	6/1968	Gould	250/493.1
3,870,873	3/1975	Mallory	362/2
4,641,227	2/1987	Kusuhara	362/2
4,789,989	12/1988	Stern et al.	362/32
5,217,285	6/1993	Sopori	362/1
5,250,258	10/1993	Oh	250/504 R

Primary Examiner—Ira S. Lazarus
Assistant Examiner—Alan B. Cariaso
Attorney, Agent, or Firm—Edna M. O'Connor

[57] **ABSTRACT**

A method and apparatus for improving the accuracy of the simulation of sunlight reaching the earth's surface includes a relatively small heated chamber having an optical inlet and an optical outlet, the chamber having a cavity that can be filled with a heated stream of CO_2 and water vapor. A simulated beam comprising infrared and near infrared light can be directed through the chamber cavity containing the CO_2 and water vapor, whereby the spectral characteristics of the beam are altered so that the output beam from the chamber contains wavelength bands that accurately replicate atmospheric absorption of solar energy due to atmospheric CO_2 and moisture.

23 Claims, 6 Drawing Sheets

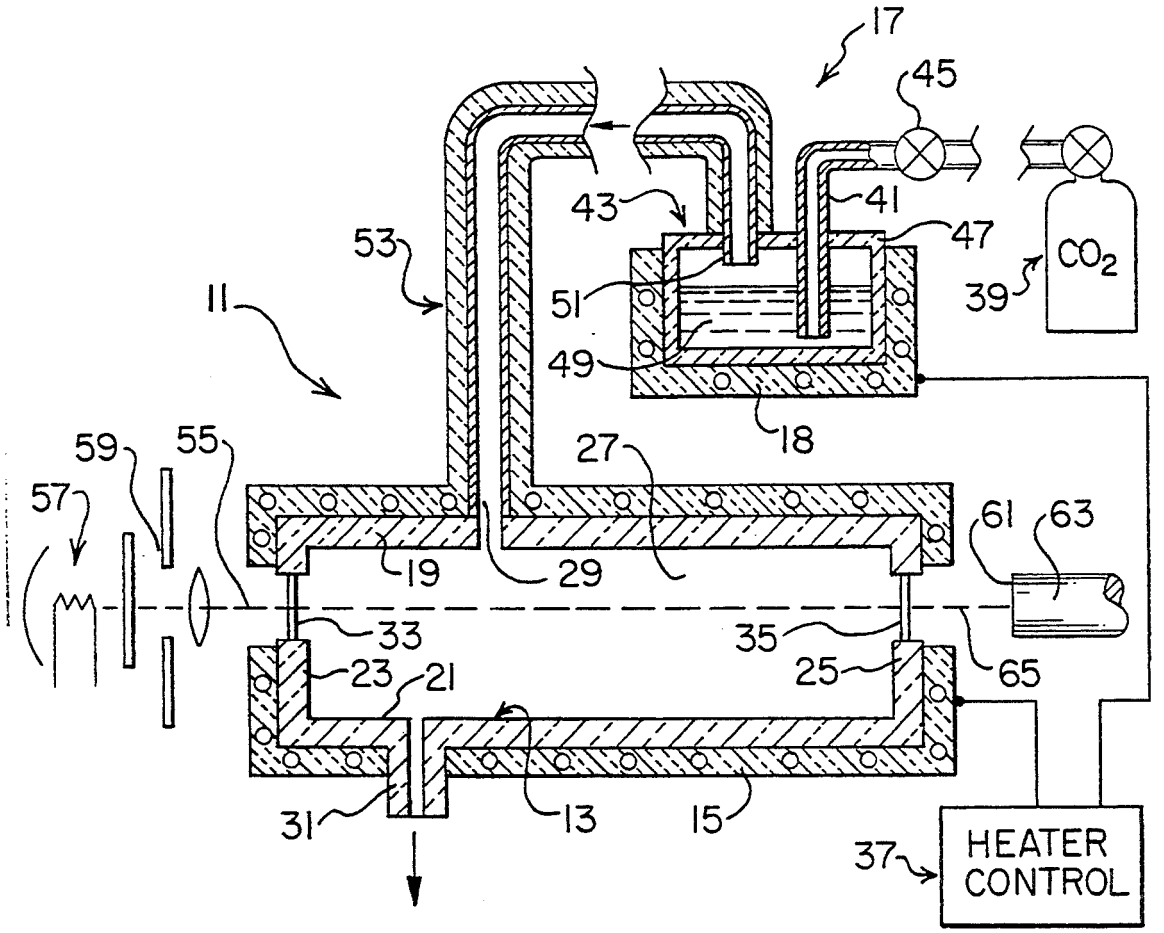

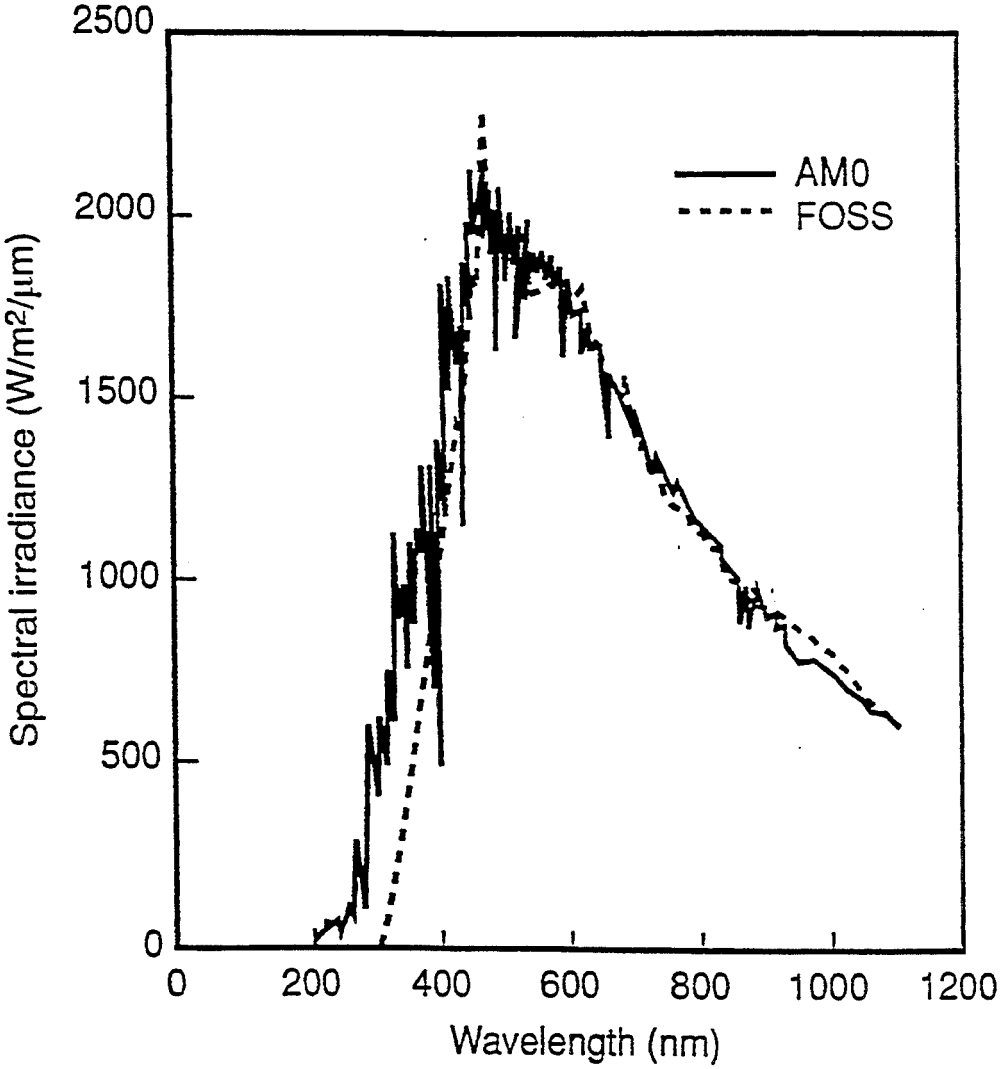
2500
2000
1500
1000
500
0
Spectral irradiance (W/m2/μm)
0
200
400
600
800
1000
1200
Wavelength (nm)
AM0
FOSS

Figure 1

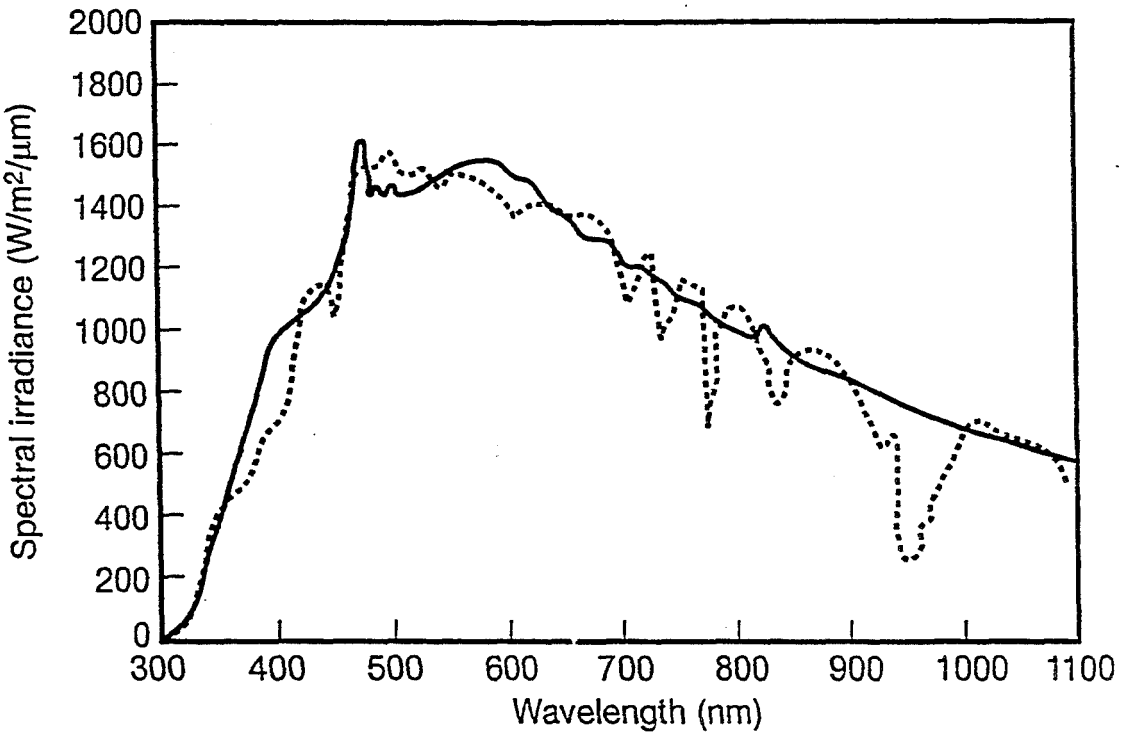
2000
1800
1600
1400
1200
1000
800
600
400
200
0
Spectral irradiance (W/m²/µm)
300
400
500
600
700
800
900
1000
1100
Wavelength (nm)

Figure 2

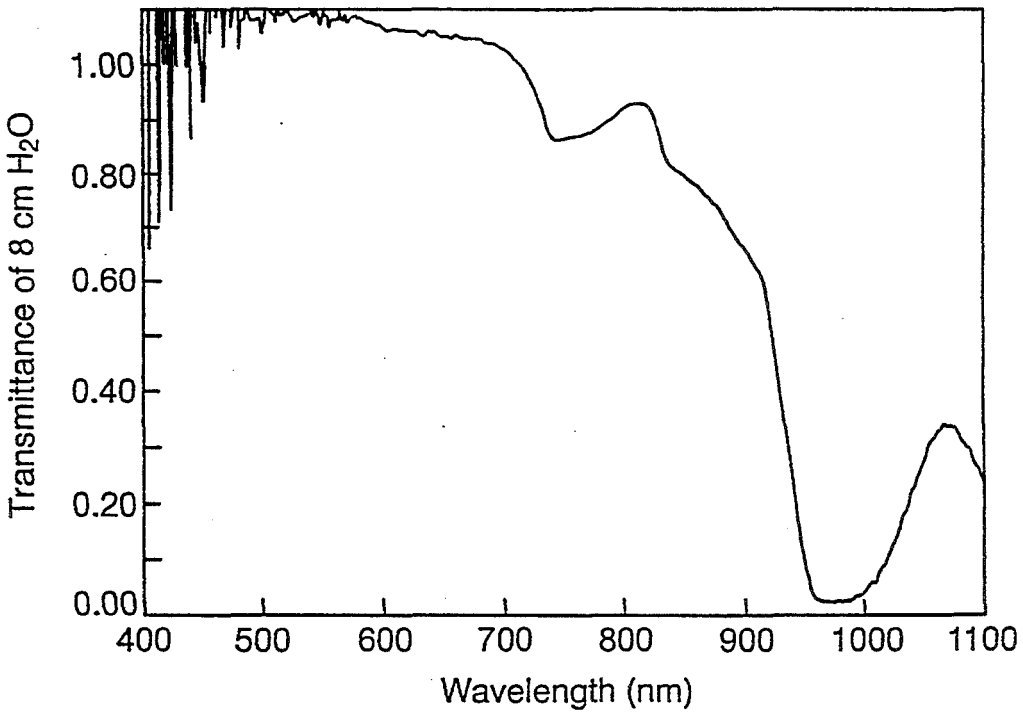
Transmittance of 8 cm H_2O
1.00
0.80
0.60
0.40
0.20
0.00
400
500
600
700
800
900
1000
1100
Wavelength (nm)

Figure 3

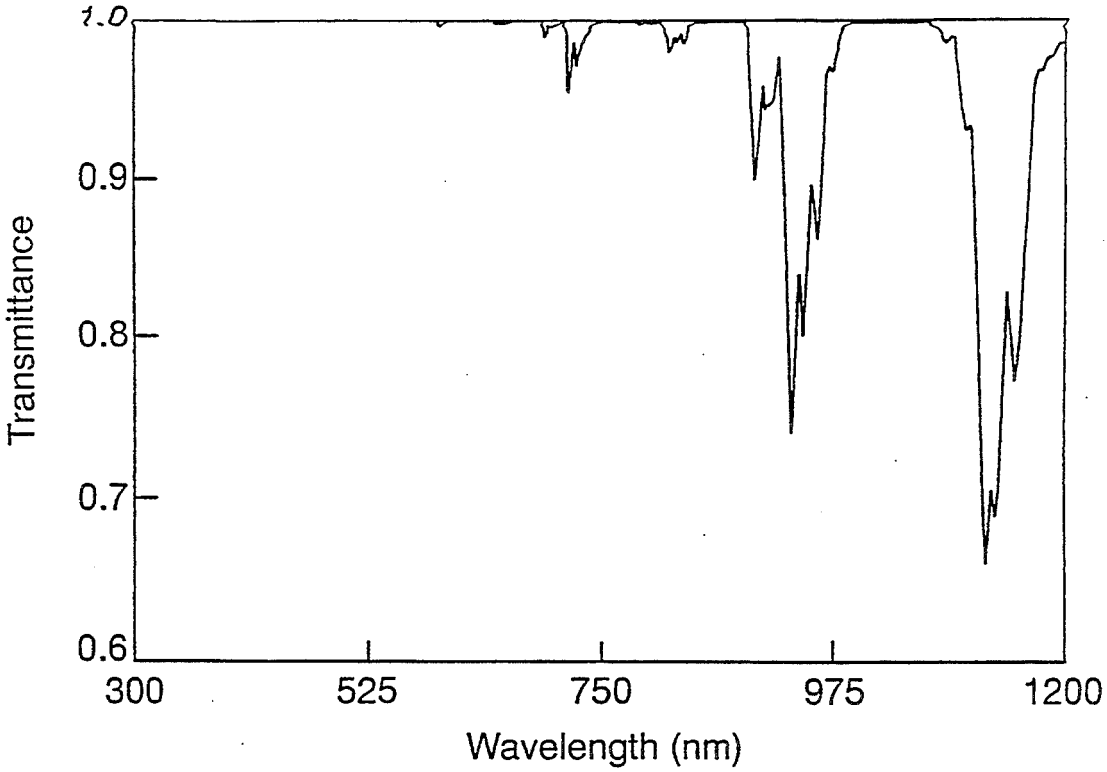
1.0
0.9
0.8
0.7
0.6
Transmittance
300
525
750
975
1200
Wavelength (nm)

Figure 4

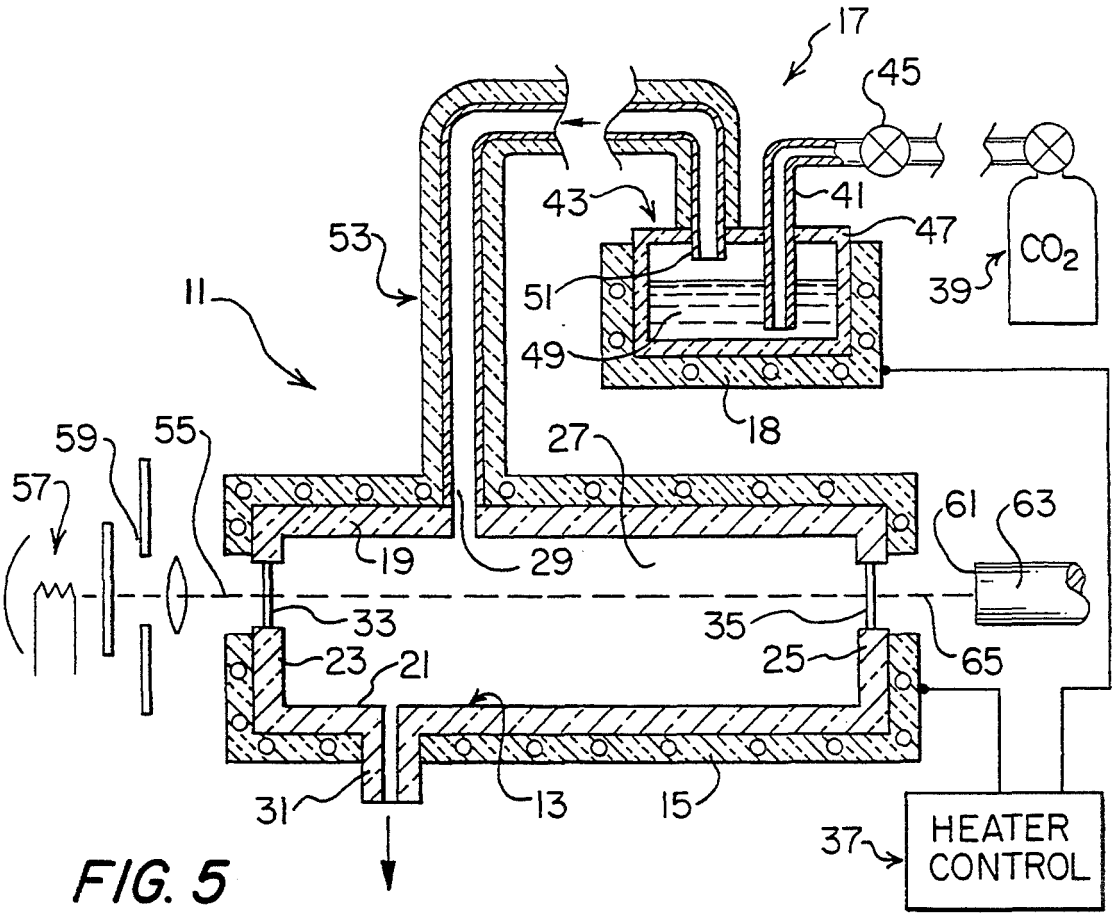
17
45
43
41
47
53
CO_2
39
11
51
49
18
59
55
27
57
61
63
19
29
33
35
65
23
21
25
31
13
15
37
HEATER CONTROL

FIG. 5

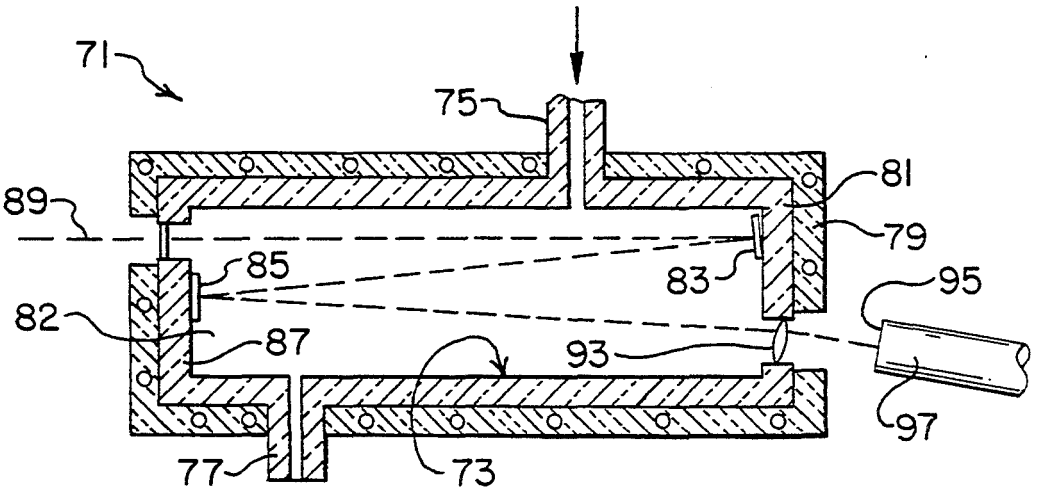
71
75
81
89
79
85
83
95
82
87
93
97
77
73

FIG. 6

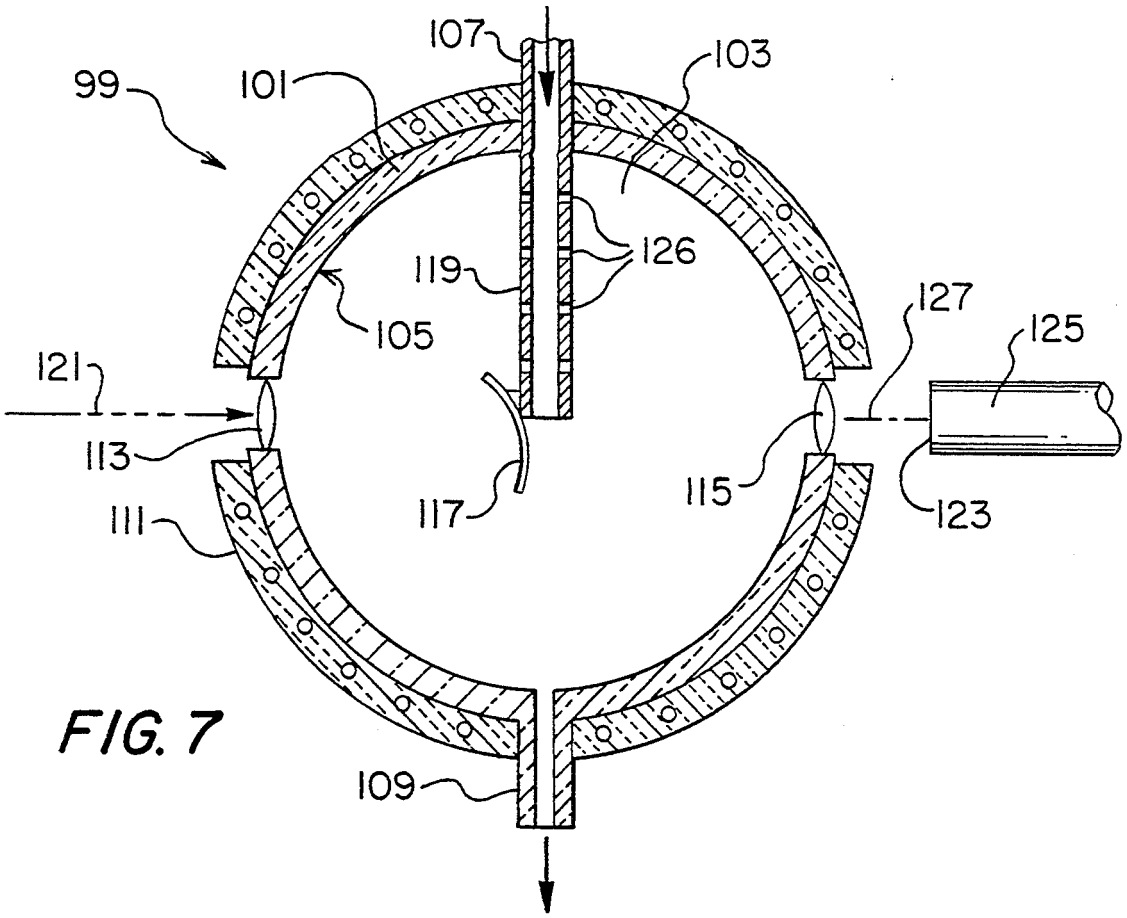
99
101
107
103
126
119
105
127
125
121
113
115
123
117
111
109

FIG. 7

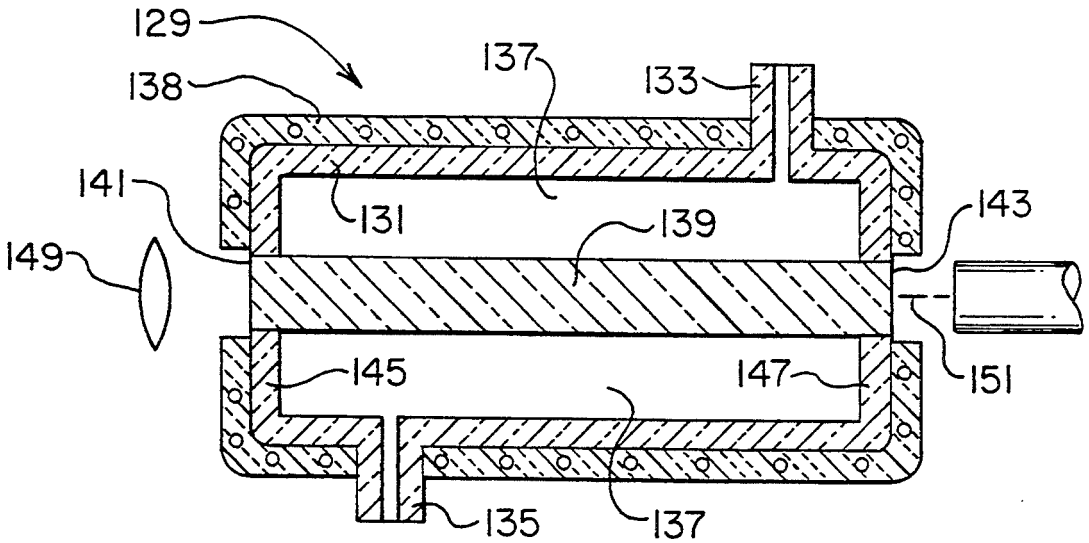
129
138
137
133
141
131
139
143
149
145
147
151
135
137

FIG. 8

METHOD AND APPARATUS FOR SIMULATING ATOMOSPHERIC ABSORPTION OF SOLAR ENERGY DUE TO WATER VAPOR AND CO_2

CONTRACTUAL ORIGIN OF THE INVENTION

The United states Government has rights in this invention under contract No. DE-AC02-83CH10093 between the United States Department of Energy and the National Renewable Energy Laboratory, A Division of the Midwest Research Institute.

BACKGROUND OF THE INVENTION

1. Field of the Invention

The present invention relates to methods and devices for simulating the spectral characteristics of solar terrestrial radiation, and more particularly to a method and apparatus that can replicate absorption of solar energy due to atmospheric CO_2 and water vapor.

2. Description of the Prior Art

Since terrestrial solar cells are designed to efficiently operate under solar energy at the earth's surface, it is of great importance for fabricators, researchers, and developers to be able to test solar cells under artificially created light that has spectral characteristics that closely match those of sunlight reaching earth. Accordingly, several standardized solar spectra have been developed for sunlight in various places and conditions. The standard reference spectrum for extra-terrestrial sunlight is referred to as the AM0 spectrum. Similarly, the AM1.5 spectrum identifies the solar spectrum on an average sunny day, while the AM2 spectrum designates the solar spectrum found on the surface of the earth at sea level. To test solar cells designed to work on earth the AM1.5 or AM2 spectra should be used, and simulator systems have been developed that produce output beams that approximate these standard spectra.

Recent advances in solar cell technology, including the development of advanced multi-junction devices, have increased cell efficiencies to near theoretical limits. This in turn, has required improved, more accurate solar simulators. U.S. Pat. No. 5,217,285 discloses such an advanced simulator which, among other things, can be adjusted to produce a uniformly distributed test beam that is well-matched to a given standard solar spectrum, such as Global AM0, AM1.5 or AM2. A comparison is made in FIG. 1. between the standard AM0 spectrum and a AM0 spectrum that is simulated by a simulator according to U.S. Pat. No. 5,217,285, and an extremely good match between the two spectra is revealed. FIG. 2 shows that such an advanced device can also produce a replication of the standard Global AM1.5 terrestrial spectrum. This replication is seen to be a very good match in the sense of comprising an envelope to the standard Global AM1.5 spectrum, however it is evident that it does not include certain absorption bands occurring above the 0.7 nm wavelength, in the near infrared and infrared region. Atmospheric water vapor and CO_2 absorb solar radiation in quite specific wavelength bands in the IR region, and consequently the spectral distribution of terrestrial radiation as shown in FIG. 2. in the standard Global AM1.5 spectrum contains several pronounced dips. Note that these wavelength bands are attributable primarily to atmospheric water vapor, and to CO_2 to a minor extent, and of the atmospheric gases such as N_2, O_2 and CO, CO_2 is the most significant light-absorbing gas.

In order to adjust a simulated terrestrial beam for atmospheric water vapor, the conventional approach has been to use water filters. This has not been successful, primarily because the liquid phase of water has very broad absorption bands that do no replicate absorption due to atmospheric water vapor. This can be seen from FIG. 3 which shows the absorption spectrum of an 8 cm thick water column. An additional drawback of the water filter approach is that unwanted absorption and changes in a simulated solar beam are produced over the entire spectral range when the beam passes through a water medium.

SUMMARY OF THE INVENTION

In view of the aforestated drawbacks and limitations of the prior art, it is a general object of the present invention to provide for a more accurate simulation of a given standard terrestrial solar spectrum.

A more particular object is to provide a simulated solar spectrum that includes a replication of absorption bands due to atmospheric moisture and CO_2.

Another object of the invention is to provide an optical filtering device of compact dimensions, convenient for laboratory bench use.

Yet another object of the invention is to provide an optical filter that simulates the effects of the passage of light through the entire thickness of the earth's atmosphere, yet which achieves such replication with a simulated beam path that is relatively very small, in the order of 1 meter or less.

A still further object is to provide such a method and apparatus that takes advantage of the "evanescent coupling effect" to replicate atmospheric absorption of solar radiation due to CO_2 and water vapor.

An additional object is to provide for the elimination of performance measurement errors, caused by spectral mismatch, in testing new advanced and highly efficient multi-junction cells.

To achieve the aforestated objects and advantages, an optical filter according to the present invention includes a chamber having walls that define an internal cavity for holding a hot vaporous mixture of CO_2 and water vapor, the chamber having an inlet and an outlet for the vaporous mixture, as well as an optical inlet and outlet. The invention includes means for generating a stream of CO_2 and water vapor, and for raising the temperature of the stream to about 70° to 90° C., whereby the vaporous mixture has a relative humidity in a range of about 70% to 90%. There is also means for delivering the stream to the chamber via the inlet in a manner effective to fill the chamber with the vaporous mixture and to maintain a certain mass of the mixture within the cavity while excess mixture flows out of the inlet. There are heating means for the chamber and the generator that are controlled to ensure that the vaporous contents of the chamber cavity are maintained at the desired temperature, and to prevent unwanted condensation within the chamber.

In one preferred embodiment, the inventive filter device is adapted to pass an essentially IR beam in a path directly from the optical inlet of the chamber, through the heated vaporous contents of the chamber, and out of the chamber optical outlet. Unexpectedly, the high relative humidity environment did not act like liquid water and cause undesirable spectral distortions, and replications of wave bands due to atmospheric absorption by water vapor and CO_2 could be achieved using a beam path less than 1 meter.

There are other embodiments of the invention that employ reflective optical elements within the chamber for directing an input beam through multiple reflections before it exits the chamber optical outlet, such configurations extending the beam path and permitting chambers of even smaller, compact dimensions. In one preferred embodiment, the chamber has a generally spherical reflective interior surface, and a reflective element, such as a concave mirror, is disposed within the chamber so as to intercept an incoming beam and reflect it onto the spherical surface, causing multiple reflections. In yet another embodiment of the invention a quartz fiber rod is disposed within the chamber, opposite ends of the rod comprising respectively, the optical inlet and optical outlet of the chamber, and the envelope of CO_2 and water vapor, having a refractive index less than quartz, providing for evanescent coupling with light that is internally reflected at the walls of the rod, this coupling effect being sufficient to provide the desired simulation of atmospheric absorption due to CO_2 and water vapor.

BRIEF DESCRIPTION OF THE DRAWINGS

The accompanying drawings, which are incorporated in and form a part of the specification, illustrate preferred embodiments of the present invention and together with the description serve to explain the principles of the invention, wherein:

FIG. 1 is a graphical representation comparing the spectrum of the output beam of an advanced fiber optic simulator with the standard solar AM0 spectrum;

FIG. 2 is a graphical representation comparing the spectrum of the output beam of an advanced fiber optic solar simulator with the standard AM1.5 global spectrum;

FIG. 3 is a graphical illustration of the transmittance spectrum of an 8 cm column of water;

FIG. 4 is a graphical representation of a normalized transmittance spectrum for 1 m of water vapor at 90° C.;

FIG. 5 is a schematic illustration showing a preferred embodiment of an optical filter apparatus according to the present invention;

FIG. 6 is a schematic illustration of a second embodiment of an optical filter according to the present invention;

FIG. 7 is a schematic illustration of a third embodiment of an optical filer according to the present invention;

FIG. 8 is a schematic illustration of a fourth embodiment of an optical filter according to the present invention.

DETAILED DESCRIPTION OF THE INVENTION

Referring now to the drawings, FIG. 5 shows that a preferred embodiment of a water vapor and CO_2 filter **11** according to the present invention, includes a chamber **13**, a chamber heater **15**, and a CO_2 and water vapor generator **17**, including heater **18**.

Chamber **13** has a generally tubular glass construction and includes an upper wall **19**, lower wall **21**, a front wall **23** and a rear wall **25**, which walls' interior define a cavity **27**. There is an inlet **29** in the chamber upper wall **19** for admitting CO_2 and water vapor to the cavity **27**, and an outlet **31** for the vaporous mixture is located in the chamber lower wall **21**. A quartz or glass window **33** is mounted, with a suitable fluid-tight seal, in the chamber front wall **23**, and serves as an optical inlet. An optical outlet is provided by a quartz or glass window **35** that is similarly mounted in chamber wall **25**, opposite the window **33**.

The chamber heater **15** is a conventional resistance coil-type assembly that wraps around the walls of chamber **13**, and includes a jacket of a suitable insulation material. Heater **15** is connected to conventional heat control **37**, and is capable of heating chamber **13** and the contents of cavity **27** in a manner that will be described hereinafter.

FIG. 5 shows that the generator **17** includes, as a CO_2 source, a canister **39** of pressurized CO_2 which is connected to the inlet **41** of a conventional bubbler **43** by way of a flow meter and regulator **45**. A bubbler reservoir **47** contains water **49**, and a bubbler outlet **51** is connected via an insulated conduit **53** to the chamber inlet **29**. The exterior of the bubbler reservoir **47** is embraced by heater **18** which comprises a conventional insulation-jacketed resistance coil that is regulated by the heater control **37**.

When filter device **11** is used in conjunction with a solar simulator, it is positioned so that a selected input beam **55** can be projected, preferably as a relatively narrow well-collimated beam, into window **33** and out of window **35**. Filter **11** is particularly advantageous when incorporated in an advanced system, such as disclosed in U.S. Pat. No. 5,217,285, for replicating desired standard terrestrial solar spectra, but which spectra do not include accurate replications of absorption bands due to atmospheric water vapor and CO_2. U.S. Pat. No. 5,217,285, which is incorporated herein by reference, employs a randomized trifurcated fiber optic cable that produces a uniform output beam that is a substantially homogeneous mix of light from three beams. A first beam of visible wavelengths is carried by a first leg of the trifurcated cable, ultraviolet light by a second leg, and infrared and near infrared light (IR) by a third leg. It is in association with the IR leg of such a system that the present invention can be used.

The input beam **55**, shown in FIG. 5, is obtained from a tungsten filament lamp **57**, and has wavelengths and intensities that very closely approximate those produced by a sun in the near infrared and infrared regions. A variable aperture **59** can selectively regulate the intensity of the input beam **55**. The input end **61** of cable leg **63** is disposed adjacent window **35** so as to receive the output beam **65** of device **11**.

To render device **11** operative it is required to fill cavity **27** with a water vapor and CO_2 mixture supplied by generator **17**, and maintain the mixture within chamber **13** at a desired temperature and relative humidity. Accordingly, the bubbler **43** is made ready by raising the temperature of water **49** using heater **18** and control **37**. Then CO_2 from canister **39** is flowed through the heated water as the flow is controlled at a desirable level, less than 5 liters/min, and preferably about 2 liters/min. Thus bubbler **43** produces a stream comprising a mixture of CO_2 and water vapor, and having a relative humidity preferably in the range of about 70–100%, preferably about 90%, in the range of 70° C. to 90° C., preferably to and a temperature of about 90° C. The insulated conduit **53** delivers this mixture to the chamber inlet **29**. Thus cavity **27** is filled with the CO_2 and water vapor mixture, outflow of the mixture occurring through the outlet **31** which ensures that the operation occurs at essentially atmospheric pressure conditions. During this time the heater **15**, controlled by control **37**, is used to heat chamber **13** and its contents to

ensure that the vaporous mixture is maintained at the desired temperature and relative humidity. The temperature of the mixture entering inlet **29** and the temperature of the chamber **13** are controlled such that condensation on interior surfaces of chamber **13** is avoided.

Device **11** can now be operated as an optical filter for the input beam **55** that follows a path through the cavity **27** mixture that is surprisingly short, yet sufficient to provide the output beam **65** with a spectrum that contains an accurate replication of wave bands due to atmospheric absorption due to CO_2 and water vapor. A primary advantage of this first embodiment **11** is that no reflective elements for extending the beam path through the chamber cavity are required, a straight path of about 1 meter or less sufficing to achieve the desired spectral change. The graphical representation of FIG. **4**, which depicts the normalized transmittance spectrum of 1 meter of water vapor at 90° C., is indicative of the relatively narrow absorption peaks that are characteristic of the absorption bands found in the IR region of the standard Global AM 1.5 solar spectrum, and which are achievable by the present invention.

FIG. **6** illustrates a second embodiment **71** according to the present invention. This embodiment **71** includes a chamber **73** similarly constructed to that of the first embodiment **11**, with an inlet **75** and outlet **77**, and an insulated heater **79**. Also like the first embodiment described above, embodiment **71** has, not shown, a CO_2 and water vapor generator connected to the inlet **75**, and a control system for the generator and chamber heaters. The primary advantage of embodiment **71** is that it employs reflective elements to extend the length of the beam path in the chamber cavity **82**, thereby making possible a shorter, more compact chamber. Accordingly a first mirror **83** is mounted in the chamber rear wall **81**, and a second mirror **85** is mounted in front wall **87**. As FIG. **6** illustrates, the mirrors **83** and **85** are oriented such that an input beam **89** through window **91** is directed along a Z-shaped path through cavity **82**. A convex collimating lens **93** is mounted in a vapor-tight manner in the chamber rear wall **81** and is appropriately oriented to collect the internally reflected beam and focus it upon the input end **95** of optical fiber cable **97**.

Variants of the embodiment **71** of the invention are contemplated which have only one mirror, or which use more mirrors than used in embodiment **71**. In embodiments as described involving reflective elements for extending the effective beam path, one or more of these elements can be concavular to correct any undesirable beam divergence, such as can occur due to "thermal blooming" of a beam in a hot humid medium. Optical losses increase with beam length and the number of reflectors, and tend to decrease the intensity of the output beam, however it is to be appreciated that in such cases where the intensity of the input beam can be independently controlled, the input beam intensity is increased to increase the intensity of the output beam without altering the spectral distribution of the output beam.

FIG. **7** illustrates a third embodiment **99** according to the present invention that features a chamber **101** having a cavity **103** that features a spherical reflective surface **105**. There is a chamber inlet **107** at the top of chamber **101** and an outlet **109** at the lower part of the chamber **101**, inlet **107** being connected in flow communication with a CO_2 and water vapor generator that is similarly constructed to the generator **17** described above with respect to the first embodiment **11**. An insulated heater **111** is suitably arranged around the exterior of chamber **101** so as to effectively heat the chamber **101** and its vaporous contents. Suitable temperature control means, (not shown), control the temperature of CO_2 and the water vapor supplied to inlet **107**, and the temperature of chamber **101**. FIG. **7** shows that the optical inlet to chamber **101** comprises a convex lens **113** which is mounted in the chamber wall in a fluid-tight manner. The optical outlet comprises another convex lens **115** similarly mounted in an opposite wall of chamber **101**. A concave mirror **117** is supported by support arm **119** near the optical center of the spherical reflective surface **81**, such that lens **115** focuses an input beam **121** onto mirror **117** which reflects the beam in a diverging manner to strike a segment of the spherical reflective surface **105**. This optical configuration is designed to result in multiple reflections off surface **105**, which multiple reflections are collected by the output lens **115** which then focuses the collected rays to the input end **123** of fiber cable **125**. Note that the mirror support arm **119** has a hollow construction marked with a plurality of orifices **126** which allow support **119** to serve as a manifold for distributing CO_2 and water vapor in the cavity **103**. This third embodiment **99**, by virtue of providing multiple reflections, can also have a chamber that is small, compact and conveniently insertable in a solar simulator. Such embodiments as embodiment **99** can have a chamber diameter as small as about 20 cm. As in the example of the second embodiment **71** and its variants, the intensity of the input beam **121** to embodiment **99** can be increased to provide the desired intensity level of output beam **127**.

A fourth embodiment **129** according to the invention is illustrated in FIG. **8**. Here shown is a cylindrical chamber **131** having a fluid inlet **133**, fluid outlet **135**, and cavity **137**. An insulated heater **138** embraces the outside of chamber **131**. As in the other embodiments of the invention, this embodiment includes appropriate means (not shown) for supplying the inlet **133** with a heated stream of CO_2 and water vapor. Embodiment **129** features a relatively thick quartz optical fiber rod **139** which is disposed along the axis of chamber **131**, and which has an input end **141** and an output end **143** which serve respectively as the optical inlet and optical outlet for the chamber **131**. Note that respective end portions of the rod **139** are sealed in a fluid-tight manner to opposite chamber end walls **145** and **147**. A convex lens **149** is positioned so as to focus an input beam onto the rod input end **141**. A unique aspect of embodiment **129** is that it takes advantage of the evanescent coupling that effects light beams in rod **139** that are incident at the interface of the quartz rod and an envelope of heated CO_2 and water vapor. It is significant that the CO_2 and water vapor mixture is a less dense light transmitting medium than quartz, and has a lower refractive index. Due to the evanescent coupling of the light beams internally reflected at the walls of rod **139**, absorption of the light will effectively occur, so as to produce an output beam **151** that simulates the desired spectral wave bands due to atmospheric CO_2 and water vapor. Note that due to the three-dimensional nature of light within rod **139**, and its reflection, the effective optical path is much greater than the physical length of rod **139**. A particular advantage of this fourth embodiment **129** is that no mirrors are needed, and light coupling to and from the ends of rod the ends of **139** can be easily done.

While a number of specific optical and mechanical components were described above with respect to the first, second, third and fourth embodiments, persons skilled in this art, given the benefit of this disclosure, will readily recognize that other substitute components may be available now and in the future to accomplish comparable functions to make simulations of atmospheric absorption due to CO_2 and water vapor according to this invention.

Thus the foregoing is considered as illustrative only of the principles of the invention. Further, since numerous modifications and changes may readily occur to those skilled in the art, it is not desired to limit the invention to the exact construction and operation as shown and described, and accordingly all suitable modifications and equivalents may be resorted to within the scope of the invention as defined by the claims which follow except as precluded by the prior art.

The embodiments in which an exclusive property or privilege is claimed are defined as follows:

1. A method for replicating the absorption wavelength bands contained in a standard solar terrestrial spectrum that are due to absorption of sunlight by atmospheric CO_2 and water vapor, said method including the steps of:

a. providing a chamber having an optical inlet and optical outlet, and a cavity;

b. providing an input beam that simulates a standard solar terrestrial spectrum, with the exception of characteristic absorption bands due to atmospheric CO_2 and water vapor;

c. filling said chamber cavity with a mixture of CO_2 and water vapor, and maintaining said mixture at a relative humidity in the range of about 70% to 90% and at a temperature in the range of about 70° C. to 90° C.; and

d. transmitting said input beam along a path through said mixture by way of said optical inlet and outlet, whereby said characteristic absorption bands are replicated in the beam at said optical outlet.

2. A method as defined in claim **1** wherein said input beam is a simulated beam of infrared and near infrared light.

3. A method as defined in claim **1** wherein said beam path is about 1 meter long or less.

4. A method as defined in claim **1** wherein said mixture is held at about atmospheric pressure.

5. A method as defined in claim **1** wherein said mixture is preheated to about 90° C. before said mixture fills said cavity and wherein said chamber is heated to maintain the temperature of said mixture filling said cavity.

6. A method as defined in claim **1** including employing at least one reflective optical element within said chamber for causing said beam path to have at least one reflection.

7. A method as defined in claim **6** including the step of providing said beam path with a plurality of reflections.

8. A method as defined in claim **6** wherein said chamber has an effective length, and said beam path is a plurality of times longer than said effective length.

9. A method as defined in claim **1** including providing said chamber with an internal spherical reflective surface, and projecting said input beam onto said spherical surface to cause multiple reflections of said beam within said cavity, and collecting said reflected beam at said chamber optical outlet.

10. A method as defined in claim **1** wherein said optical inlet and optical outlet comprise opposite ends respectively of a glass or quartz optical fiber rod, and whereby said replications to said beam are caused by an evanescent coupling effect occurring between said beam in said rod and said mixture of CO_2 and water vapor.

11. An optical filter apparatus for replicating in a simulated solar terrestrial beam, the wavelength bands that are due to absorption of sunlight by atmospheric CO_2 and water vapor, said apparatus including:

a. means for generating and heating a gaseous stream comprising a mixture of CO_2 and water vapor whereby said mixture has a relative humidity of at least 90% and a temperature of about 90° C.;

b. a chamber having a cavity for receiving said gaseous mixture, and an inlet for said mixture and an outlet for said mixture, said inlet connected in flow communication with said means for generating and heating said gaseous stream, said chamber having an optical inlet and an optical outlet; and

c. means for heating said chamber whereby said mixture in said cavity can be maintained at said relative humidity and temperature, and whereby said chamber provides an optical path for said beam, from said optical inlet to said optical outlet.

12. Apparatus as defined in claim **11** wherein said optical path is a direct one and no greater that 1 meter in length.

13. Apparatus as defined in claim **11** including reflective means mounted in said chamber for receiving said beam that enters said chamber through said optical inlet, and for reflecting said beam to said optical outlet.

14. Apparatus as defined in claim **13** wherein said reflective means includes a plurality of mirrors that are arranged to provide said path with a plurality of reflections.

15. Apparatus as defined in claim **14** wherein said chamber has a given length, and said beam path is a plurality of times greater than said chamber length.

16. Apparatus as defined in claim **14** wherein at least one of said mirrors is concave.

17. Apparatus as defined in claim **13** wherein said optical outlet comprises a convex lens.

18. Apparatus as defined in claim **12** wherein said cavity is bounded by a spherical reflective surface and said reflective means is oriented to reflect an input beam through said optical inlet to said spherical surface, whereby a plurality of reflections of said beam are produced within said cavity, and wherein said optical outlet comprises a convex lens.

19. Apparatus as defined in claim **18** wherein said optical inlet is a convex lens.

20. Apparatus as defined in claim **18** wherein said chamber inlet for said mixture has a portion that extends radially inwardly of said cavity, and has an inner end that supports said reflective means.

21. Apparatus as defined in claim **18** wherein said reflective means comprises a concave mirror.

22. Apparatus as defined in claim **18** wherein the diameter of said spherical surface is less than 20 cm.

23. Apparatus as defined in claim **11** including an optical fiber rod mounted in said chamber, said rod having a first end that comprises said optical inlet, and having an opposite end that comprises said optical outlet, and wherein a light beam through said rod undergoes evanescent coupling with said CO_2 and water vapor mixture.

* * * * *