US005406367A

United States Patent [19]

Sopori

[11] **Patent Number: 5,406,367**

[45] **Date of Patent: Apr. 11, 1995**

[54] **DEFECT MAPPING SYSTEM**

[75] Inventor: **Bhushan L. Sopori**, Denver, Colo.

[73] Assignee: **Midwest Research Institute**, Kansas City, Mo.

[21] Appl. No.: **60,301**

[22] Filed: **May 10, 1993**

[51] **Int. Cl.**[6] **G01N 21/88**

[52] **U.S. Cl.** **356/30**; 356/36; 356/237; 356/446

[58] **Field of Search** 356/30, 31, 237, 446, 356/371, 36

[56] **References Cited**

U.S. PATENT DOCUMENTS

4,243,473	6/1981	Yamaguchi et al. .	
4,449,818	5/1984	Yamaguchi et al.	356/237
4,482,245	11/1984	Makabe et al. .	
4,626,101	12/1986	Ogawa et al. .	
4,794,265	12/1988	Quackenbos et al. .	
4,840,487	6/1989	Noguchi et al. .	
4,925,298	5/1990	Dobrilla .	
5,008,542	4/1991	Look et al. .	

FOREIGN PATENT DOCUMENTS

119439	5/1987	Japan	356/30

OTHER PUBLICATIONS

B. L. Sopori, Use of Optical Scattering to Characterize Dislocations Semiconductors, 22 Appl. Optics 4676 (1988).

Primary Examiner—F. L. Evans

Attorney, Agent, or Firm—Ken Richardson; Edna M. O'Connor

[57] **ABSTRACT**

Apparatus for detecting and mapping defects in the surfaces of polycrystalline materials in a manner that distinguishes dislocation pits from grain boundaries includes a laser for illuminating a wide spot on the surface of the material, a light integrating sphere with apertures for capturing light scattered by etched dislocation pits in an intermediate range away from specular reflection while allowing light scattered by etched grain boundaries in a near range from specular reflection to pass through, and optical detection devices for detecting and measuring intensities of the respective intermediate scattered light and near specular scattered light. A center blocking aperture or filter can be used to screen out specular reflected light, which would be reflected by nondefect portions of the polycrystalline material surface. An X–Y translation stage for mounting the polycrystalline material and signal processing and computer equipment accommodate rastor mapping, recording, and displaying of respective dislocation and grain boundary defect densities. A special etch procedure is included, which prepares the polycrystalline material surface to produce distinguishable intermediate and near specular light scattering in patterns that have statistical relevance to the dislocation and grain boundary defect densities.

20 Claims, 12 Drawing Sheets

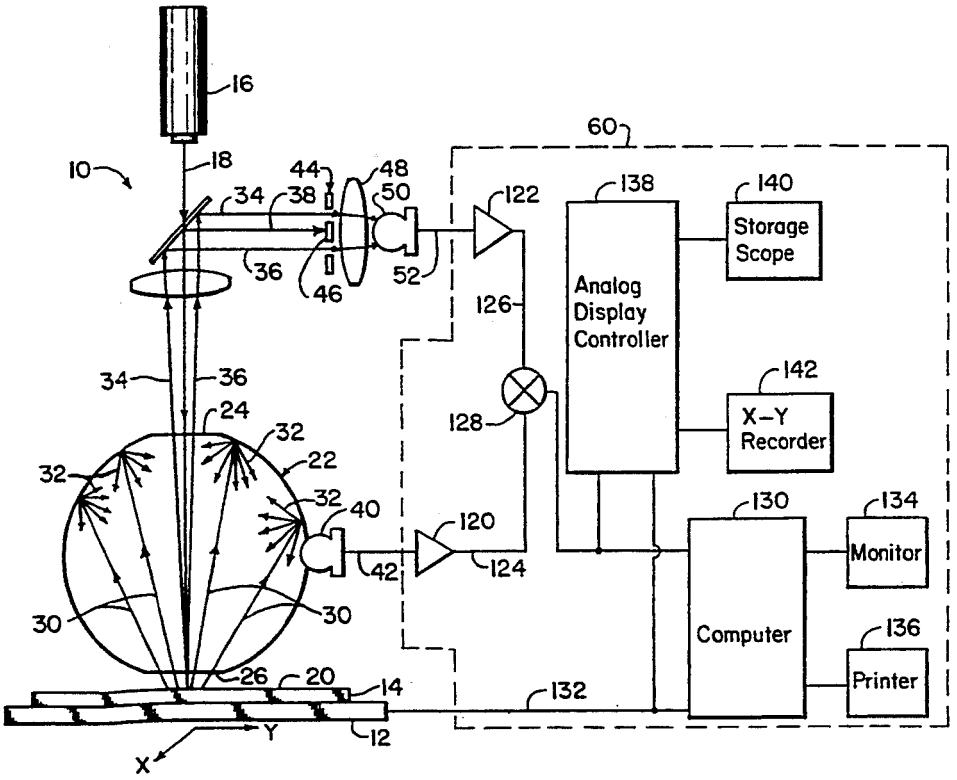

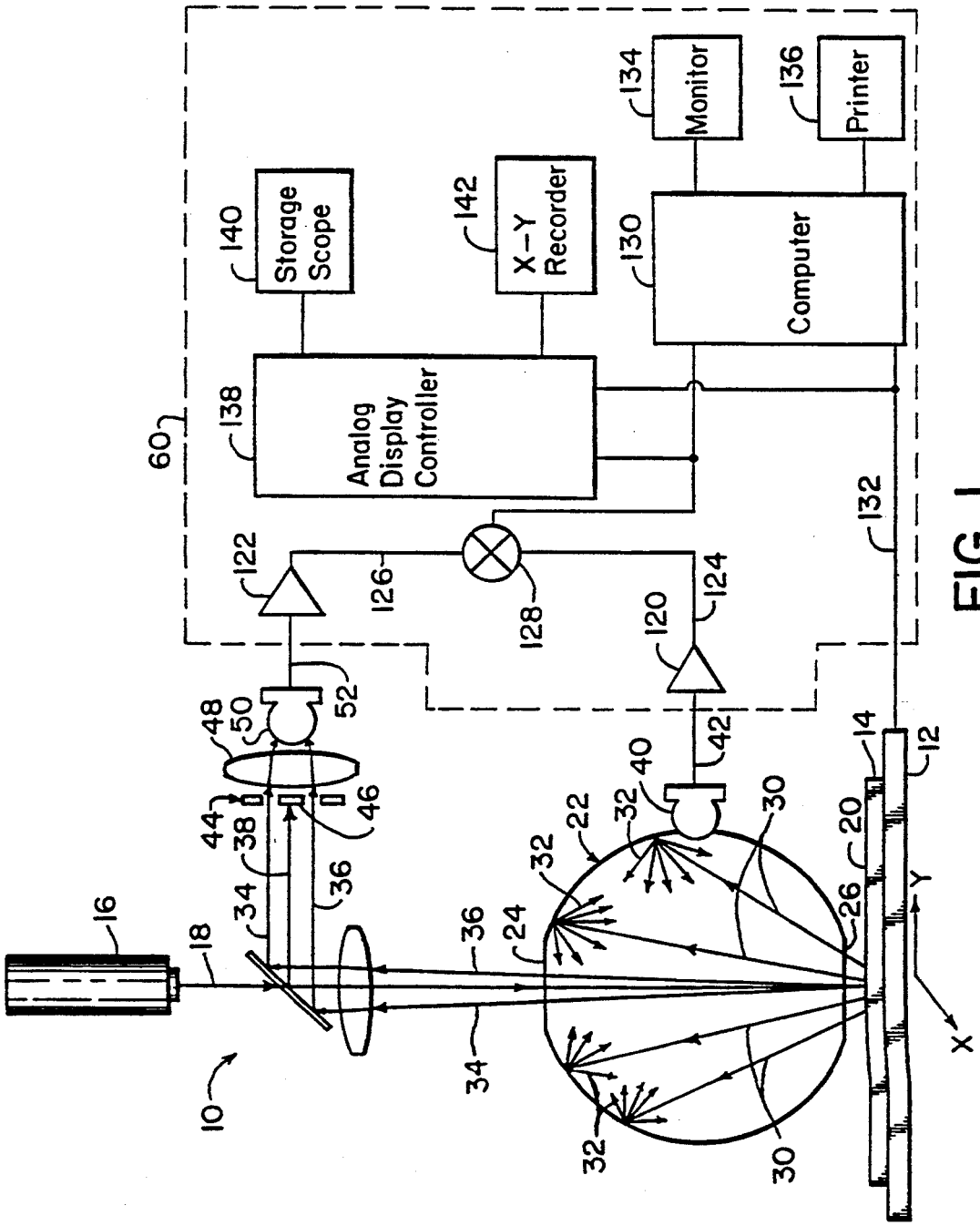
Storage Scope
X–Y Recorder
Monitor
Printer
Computer
Analog Display Controller
10
12
14
16
18
20
22
24
26
30
32
34
36
38
40
42
44
46
48
50
52
60
120
122
124
126
128
130
132
134
136
138
140
142
X
Y

FIG. 1

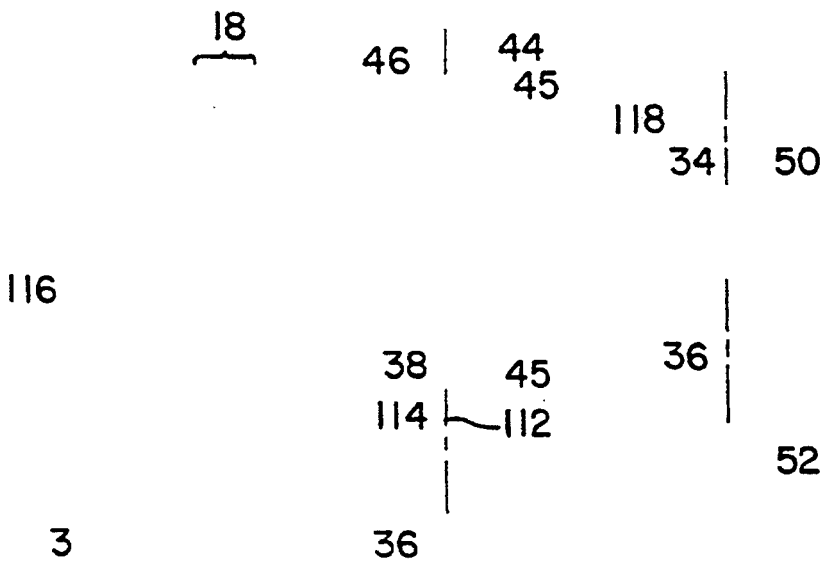
18
46
44
45
118
34
50
116
38
45
36
114
112
52
3
36

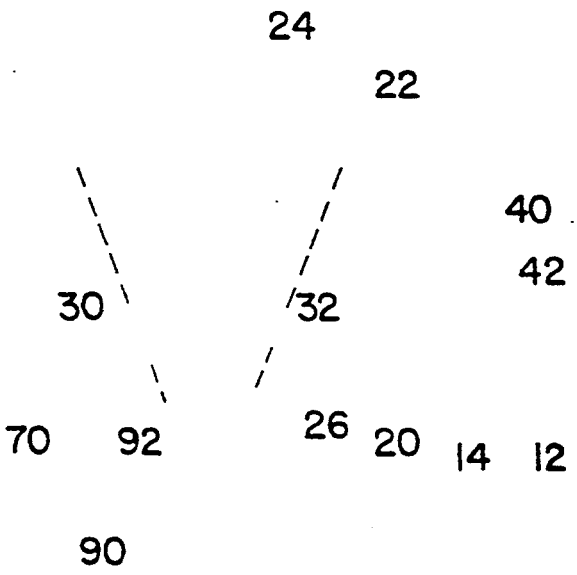
24
22
40
42
30
32
70
92
26
20
14
12
90

FIG. 2

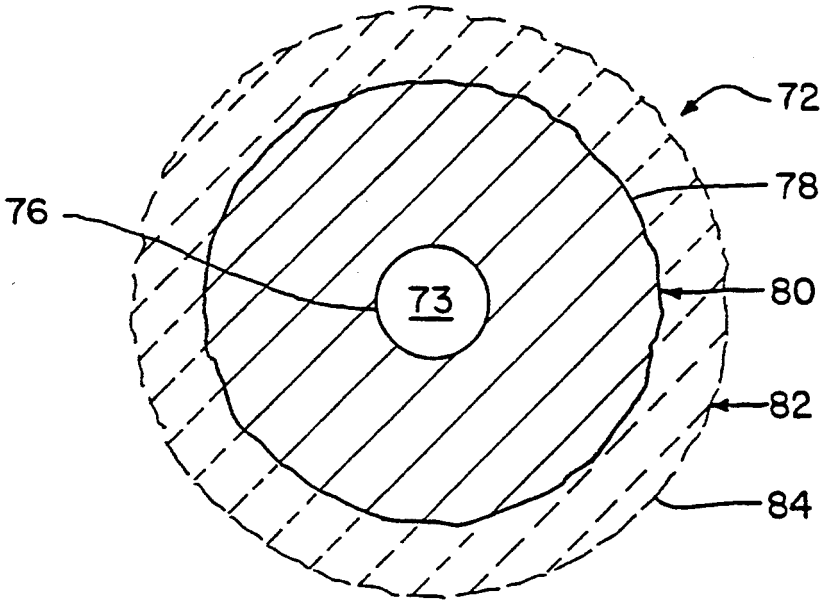

FIG. 3b

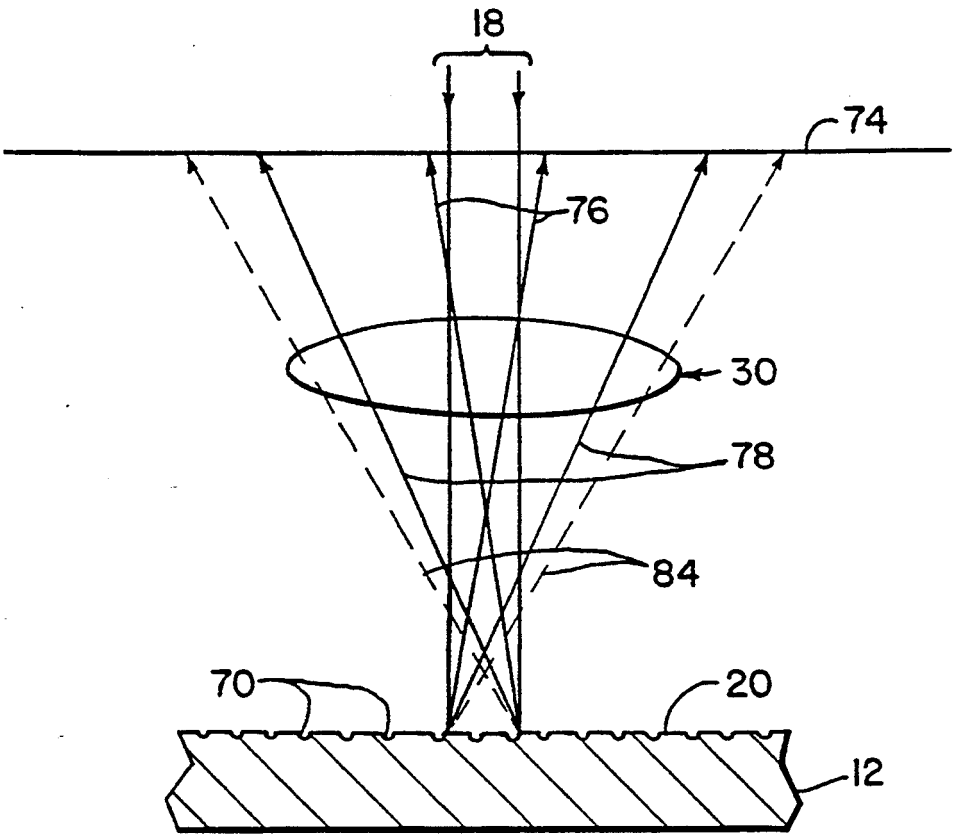

FIG. 3a

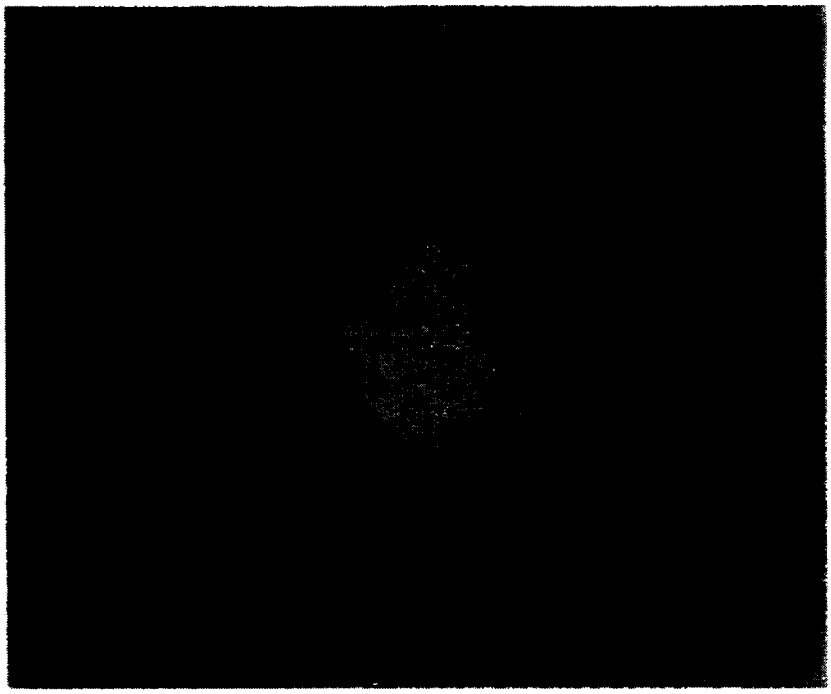

FIG. 3d

FIG. 3c

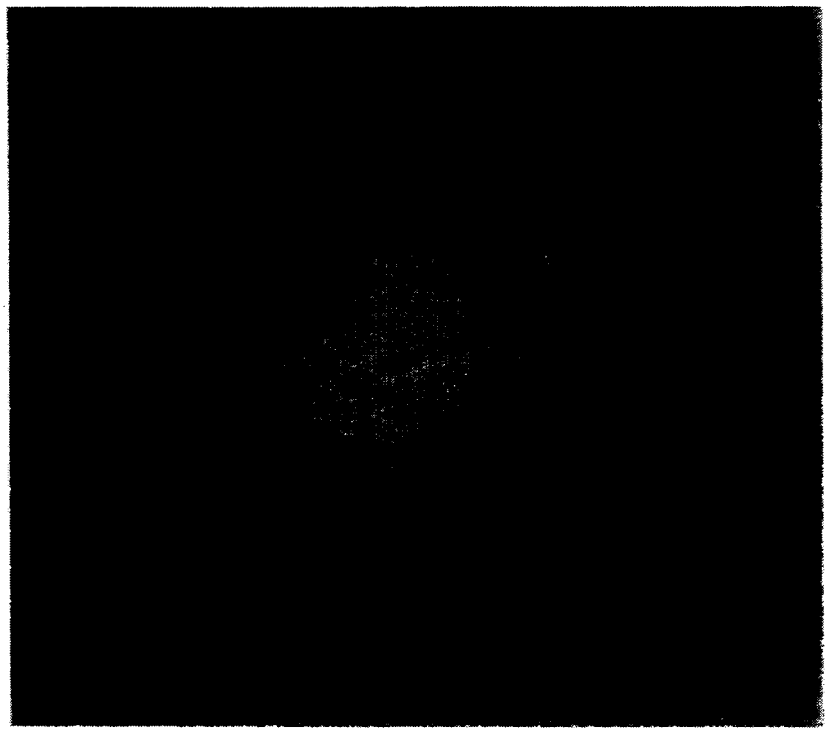

FIG. 3f

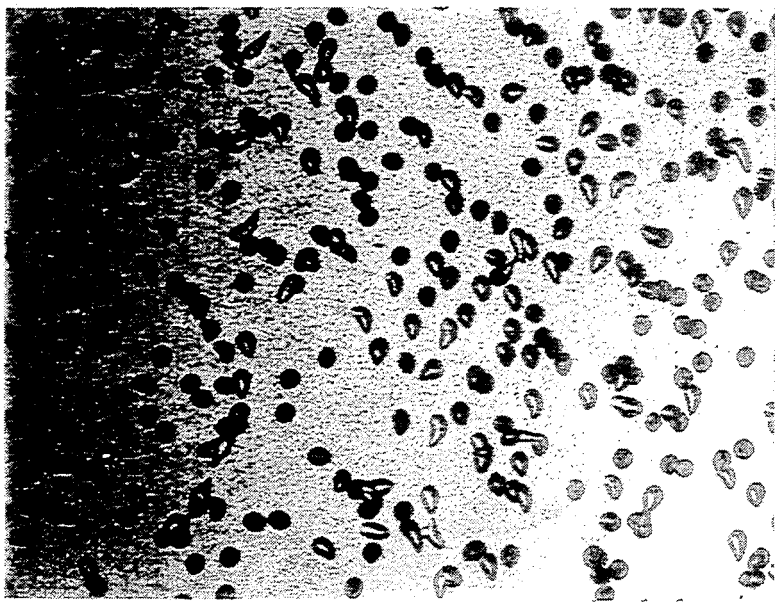

FIG. 3e

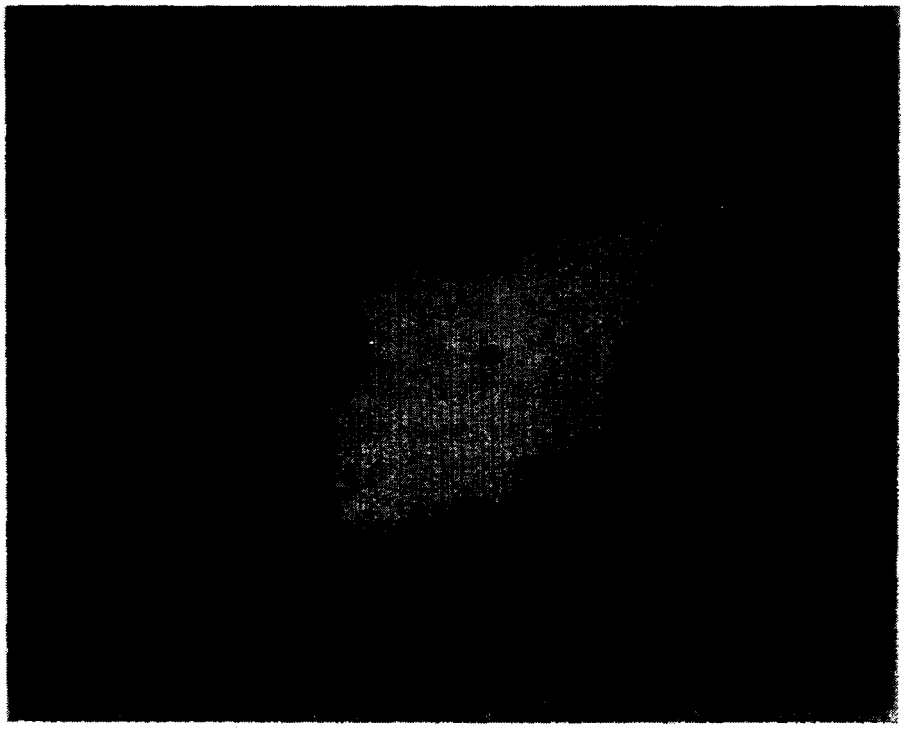

FIG. 3h

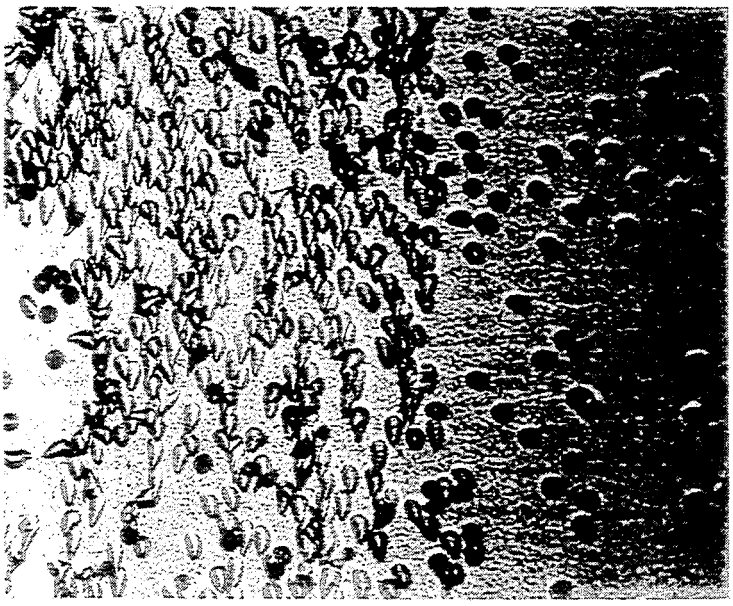

FIG. 3g

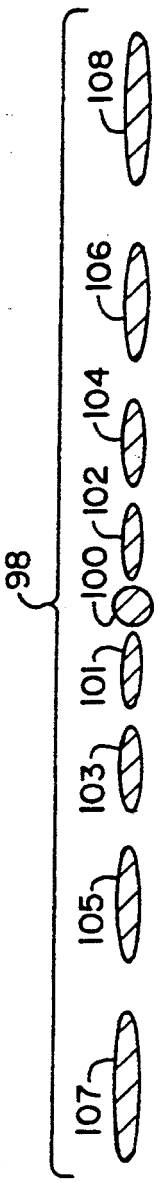

FIG. 4b

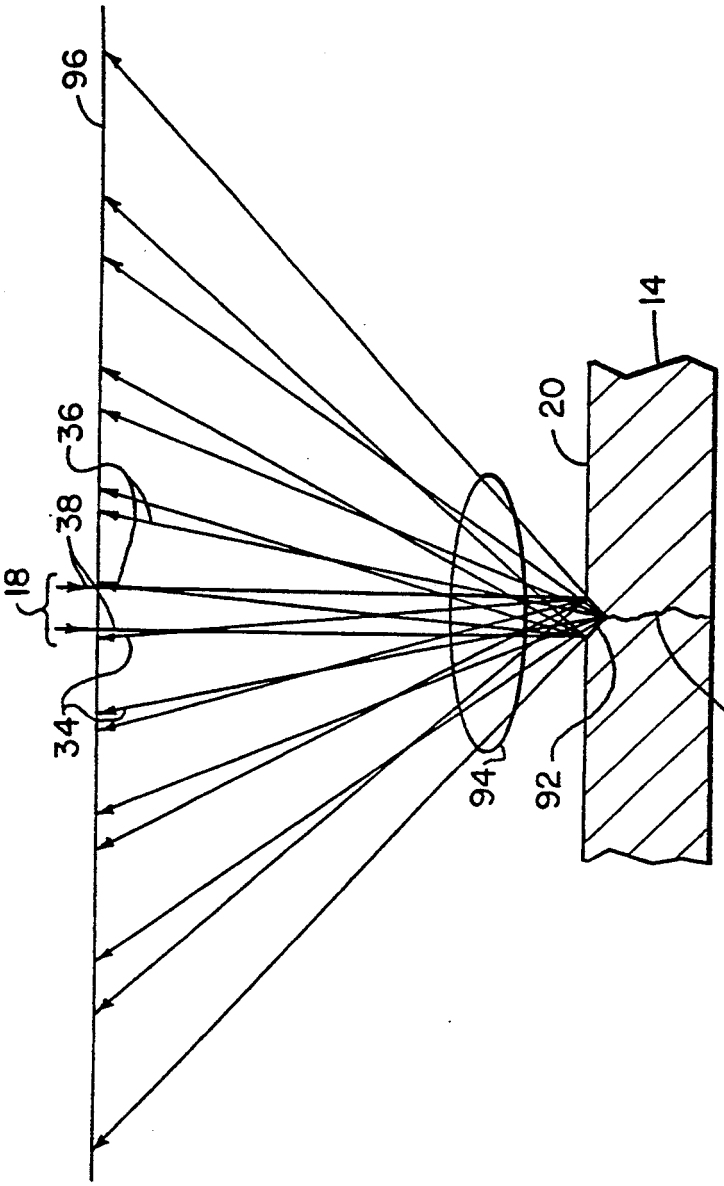

FIG. 4a

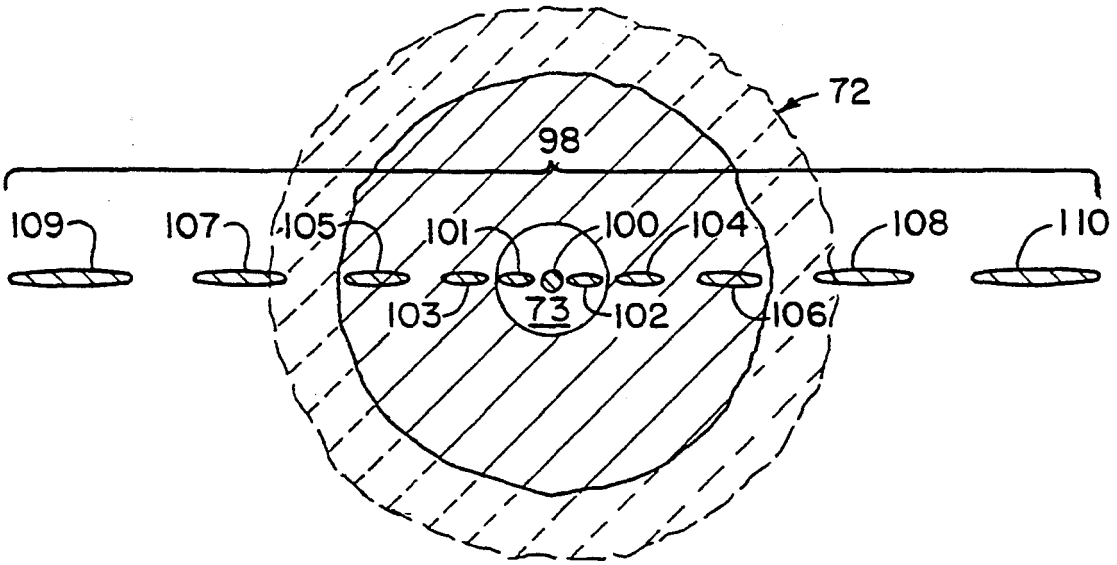

FIG. 5

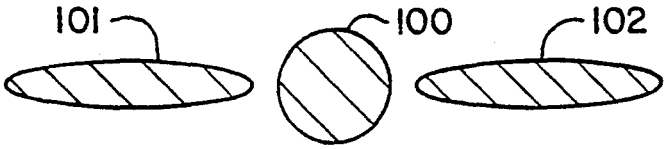

FIG. 6

FIG. 7

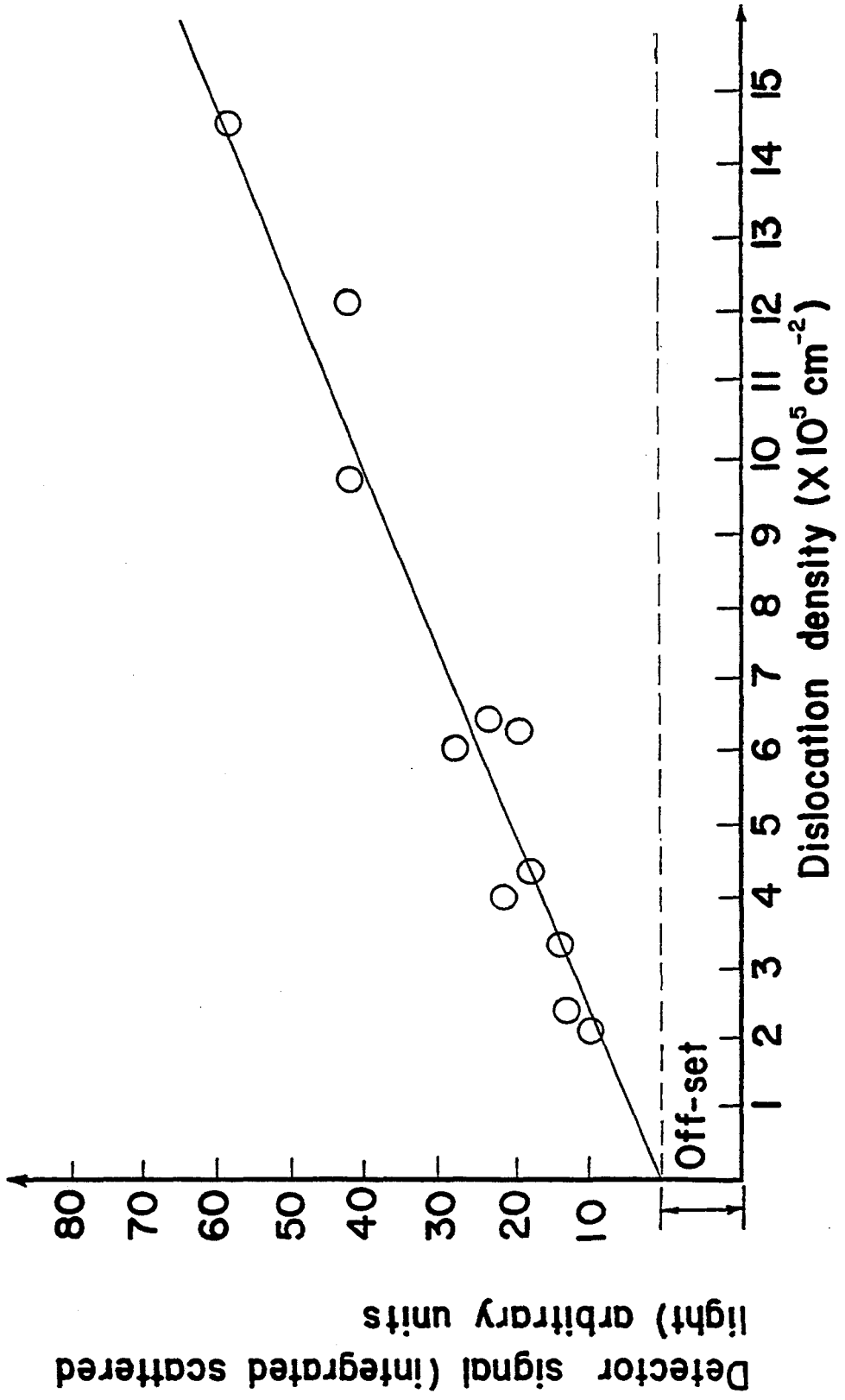
Detector signal (integrated scattered light) arbitrary units
80
70
60
50
40
30
20
10
Off-set
1
2
3
4
5
6
7
8
9
10
11
12
13
14
15
Dislocation density (X 10^5 cm^-2)

FIG. 8

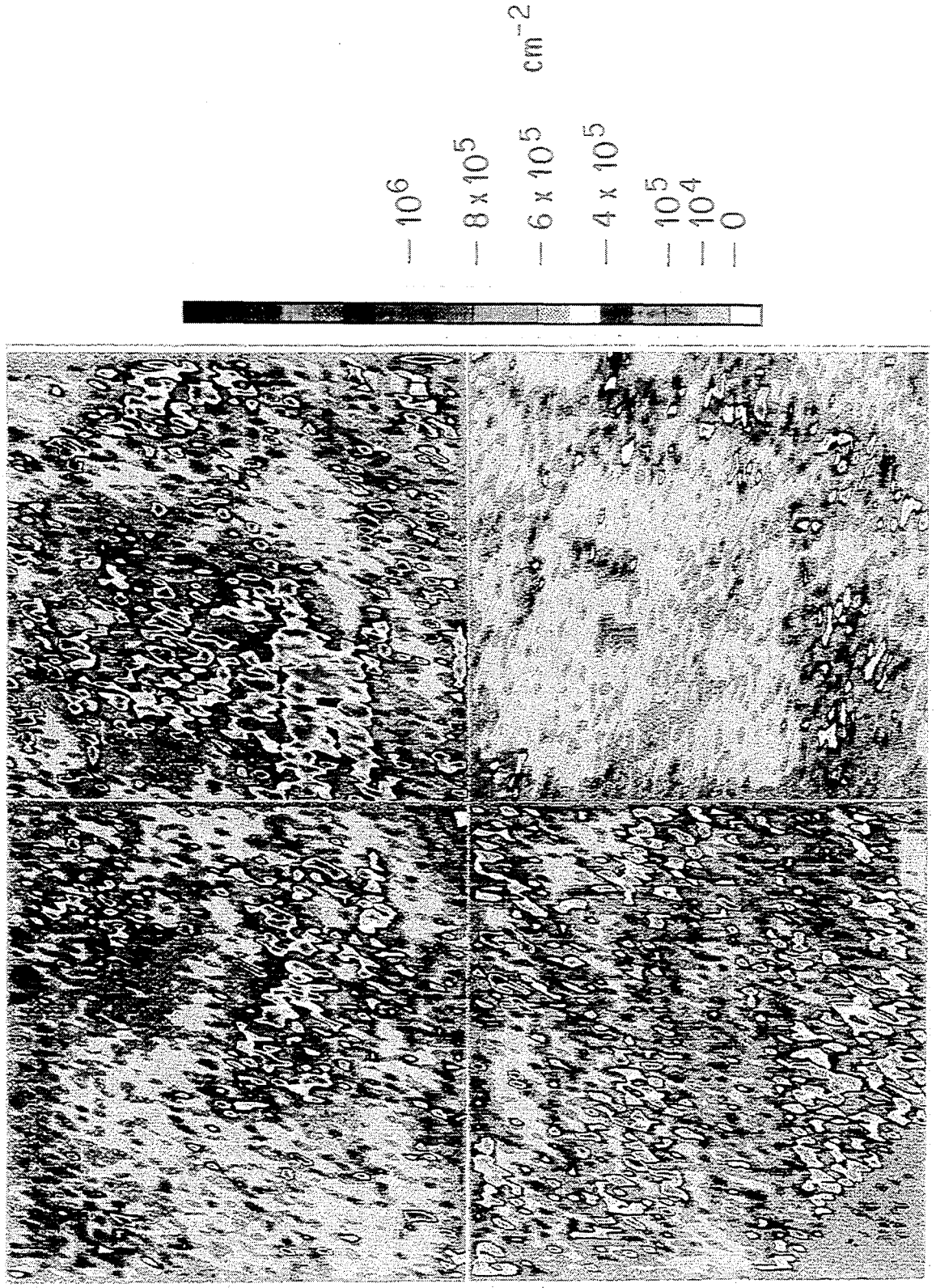

FIG. 9

FIG. 10b

FIG. 10a

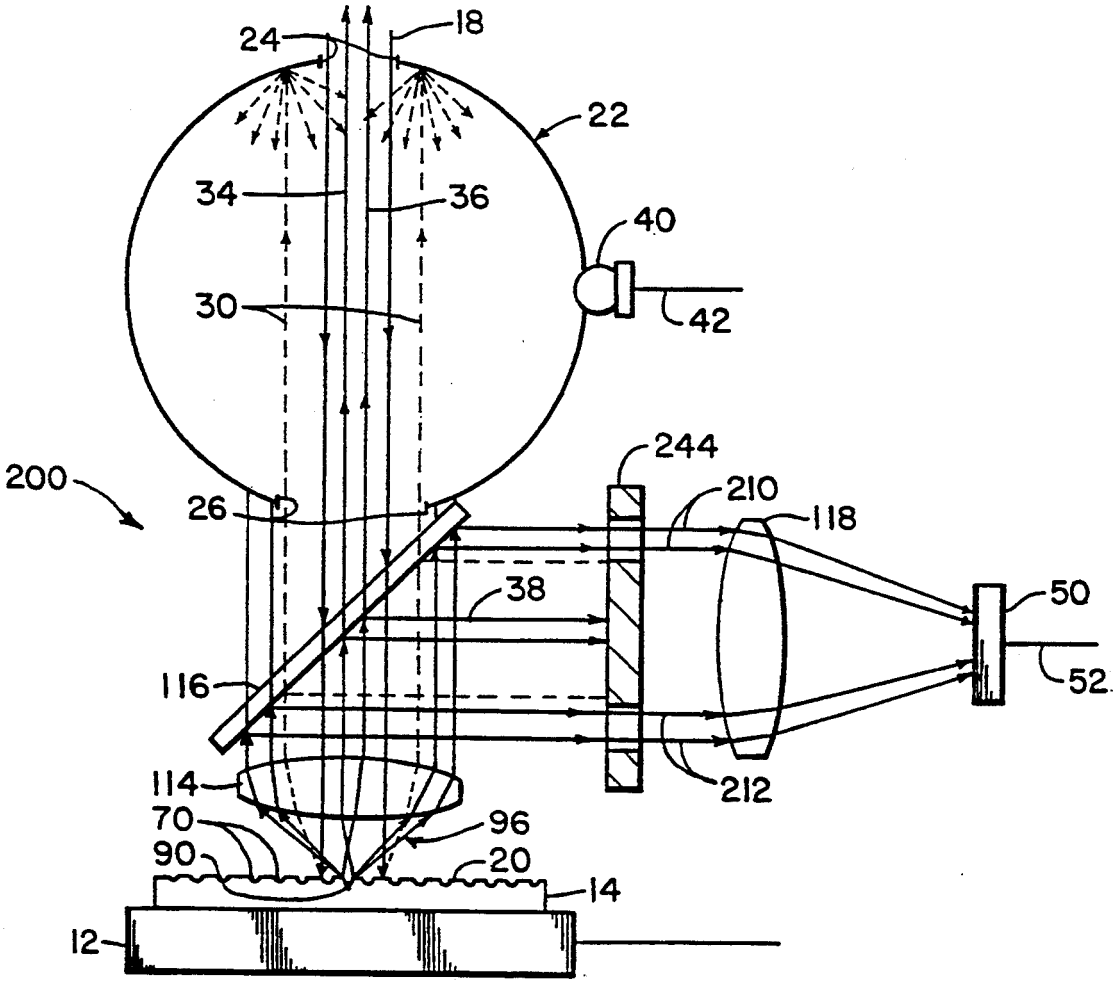
24
18
22
34
36
40
30
42
244
200
210
26
118
38
50
116
52
114
212
70
96
90
20
14
12

FIG. 11

DEFECT MAPPING SYSTEM

The United States Government has rights in this invention under Contract No. DE-AC02-83CH10093 between the U.S. Department of Energy and the National Renewable Energy Laboratory, a Division of Midwest Research Institute.

BACKGROUND OF THE INVENTION

1. Field of the Invention

This invention is related generally to techniques for mapping defects on semiconductor surfaces and more particularly to an optical system that can distinguish dislocation pits from grain boundaries in mapping polycrystalline device surfaces.

2. Description of the Prior Art

The quality and suitability of crystalline and polycrystalline materials, such as silicon, gallium-arsenic, and others, for use as substrates for semiconductor applications are affected by defects, such as dislocations, in the crystalline structures. Generally, higher densities of dislocations are indicative of lower quality materials. Therefore, there is a need for systems to detect, measure, and map dislocation densities in crystalline and polycrystalline materials for purposes of analysis and quality control.

There are a number of systems that have been developed to detect and map dislocation densities. The methods used most commonly in the industry currently utilize a surface cleaning or polish step followed by some variation of an etch, which reveals dislocations that intersect the surface of the material by forming a pit at each dislocation site. The pits can then be detected, counted, and mapped, and the density of the pits, i.e., number of pits per unit of surface area, can be determined. This etch pit density (EPD) is considered by persons skilled in this art to be a reliable indicator of the number and density of dislocations in the substrate, and the pits have patterns that reflect slip planes in the crystal lattice of the material.

The most commonly used method of detecting and counting pits to determine EPD is visual observation through a microscope and counting. This process is obviously labor intensive, time consuming, and tedious work. Some alternative systems based on optical technologies to detect and map EPDs have been developed that apparently work on monocrystalline substrates, but none that work reliably for polycrystalline substrates. For example, the U.S. Pat. No. 4,925,298, issued to P. Dobrilla, compares specularly reflected light from an etched sample surface to light reflected from a reference surface to determine EPD. U.S. Pat. No. 5,008,542, issued to D. Look et al. is similar, except it detects light transmitted through the substrate rather than reflected light. In both of those techniques, the specular light is detected, so an increase of dislocation density results in increase of scattered light, and thus a decrease in detection signal. However, polycrystalline substrates present major problems for those systems, because grain boundaries cause substantial light scattering, thus affecting light detection signals and skewing EPD measurements.

It has also been shown and is now well-known in the industry that light scattering from a defect-etched surface can be used to determine surface dislocation numbers statistically. In fact, as reported in B. L. Sopori, "Use of optical scattering to characterize dislocations in semiconductors," 22 APPL OPTICS 4676 (1988), it has been determined that the total integrated light scattered from an illuminated region of a defect-etched surface is proportional to the number of dislocation etch pits in that area, provided that the surface is etched for defect delineation. A light integrating sphere positioned on the surface of the material collects and integrates substantially all of the scattered light, and a photodetector mounted in the integrating sphere measures the integrated light intensity, thus the extent of EPD in an illuminated area on the surface. Again, however, while that large beam statistical EPD detection and mapping technique works well for many applications involving single crystal materials, it does not work well with polycrystalline structures. Grain boundaries in polycrystalline materials are "grooved" in the defect etching process required for defect delineation, so scattering of light by the grain boundaries can cause a larger amplitude integrated light in the integrating sphere, and thus an erroneous EPD signal.

SUMMARY OF THE INVENTION

A general object of this invention, therefor, is to provide an improved defect mapping system for crystalline materials.

Another general object of this invention is to provide a defect mapping system that is useable and accurate on polycrystalline materials as well as crystalline materials.

A more specific object of this invention is to provide an optical scattering defect mapping system wherein light scattered by etched dislocation pits can be discriminated from light scattered by grain boundaries.

Another specific object of this invention is to provide an improvement to large beam statistical EPD detection and mapping systems that can be used on both single crystal and polycrystalline materials.

An even more specific object of this invention is to provide an improved large beam statistical EPD detection and mapping system that can be adjusted to detect and map either EPD or grain boundaries of a polycrystalline material.

Additional objects, advantages and novel features of this invention shall be set forth in part in the description that follows, and in part will become apparent to those skilled in the art upon examination of the following specification or may be learned by the practice of the invention. The objects and advantages of the invention may be realized and attained by means of the instrumentalities, combinations, and methods particularly pointed out in the appended claims.

To achieve the foregoing and other objects and in accordance with the purposes of the present invention, as embodied and broadly described therein, a defect mapping system includes a method for scattering light from the surface of a crystalline material that contains two types of defects, for example, dislocation defects and grain boundary defects, such that the first type of defect scatters light in a first pattern, and the second type of defect scatters light in a second pattern. The first type of pattern for dislocations produces a two-dimensional image with a light intense area surrounding a light void area. The second type of pattern for grain boundaries produces a practically one-dimensional image, some of which is distributed in the light void area of the first pattern and some of which extends through and beyond the light intense area of the first pattern. The light intense area of the first pattern is captured in a light integrating sphere for detection. The light of the

second pattern that is near specular passed through the light integrating sphere for separate detection. Alternatively, the far specular dispersion of light in the second pattern can be diverted and detected in front of the light integrating sphere. The surface preparation that produces these distinct patterns of scattered light includes an etch procedure that creates etch pits at dislocation sites of about equal volume, regardless of dislocation orientation, and V-shaped grooves at grain boundaries.

BRIEF DESCRIPTION OF THE DRAWINGS

The file of this patent contains at least one drawing executed in color. Copies of this patent with color drawings will be provided by the Patent and Trademark Office upon request and payment of the necessary fee.

The accompanying drawings, which are incorporated in and form a part of the specifications, illustrate the preferred embodiments of the present invention, and together with the descriptions serve to explain the principles of the invention.

In the Drawings:

FIG. **1** is a schematic diagram of the improved defect mapping system of the present invention;

FIG. **2** is an enlarged schematic illustration of the optical components of the system shown in FIG. **1**;

FIG. **3***a* is a schematic representation of the scattered light rays from an illuminated crystalline material sample that has an etched surface to reveal and delineate defects, particularly dislocations, in the crystalline material;

FIG. **3***b* is a representation of a typical scattered light pattern from an illuminated crystalline sample that has been etched according to this invention;

FIG. **3***c* is an enlarged view of etch pits on the surface of a silicon sample, wherein the etch pits are substantially circular in shape;

FIG. **3***d* is a photograph of an actual light pattern that has been scattered by the surface of the silicon sample of FIG. **3***c* according to this invention;

FIG. **3***e* is an enlarged view of etch pits on the surface of a silicon sample, wherein the etch pits are substantially elliptical in shape;

FIG. **3***f* is a photograph of an actual light pattern that has been scattered by the surface of the silicon sample of FIG. **3***e;*

FIG. **3***g* is an enlarged view of etch pits on the surface of a silicon sample, wherein the etch pits are two different shapes (resembling ellipses);

FIG. **3***h* is a photograph of an actual light pattern that has been scattered by the surface of the silicon sample of FIG. **3***g;*

FIG. **4***a* is a schematic illustration of light rays scattered by a V-shaped etch grain boundary in a polycrystalline material;

FIG. **4***b* is an illustration of the pattern of light scattered by a V-shaped etch grain boundary of FIG. **4***a;*

FIG. **5** illustrates the grain boundary light pattern of FIG. **4***b* superimposed on the etch pit light pattern of FIG. **3***b*, which combination occurs when a beam illuminating an etch pit sample surface encounters an etch grain boundary, as illustrated in FIG. **2**;

FIG. **6** is an illustration of the central part of the grain boundary scattered light pattern that is captured separate from the etch pitch scattered light according to this invention;

FIG. **7** is an illustration of the grain boundary scattered light pattern of FIG. **6** after removal of the center spot and converging for incidence on a photodetector;

FIG. **8** is a graph of detector signal intensity (integrated scattered light) plotted versus dislocation density;

FIG. **9** is a dislocation defect map of a crystal system wafer produced according to this process;

FIG. **10***a* is a photograph showing the grain boundaries in a surface of polycrystalline silicon wafer;

FIG. **10***b* is a grain boundary defect map of the wafer of FIG. **10***a* produced according to this invention; and

FIG. **11** is a schematic diagram of an alternate embodiment defect mapping system according to the present invention.

DETAILED DESCRIPTION OF THE PREFERRED EMBODIMENTS

The improved defect mapping system **10** of this invention is illustrated schematically in FIG. **1**. An X-Y translation stage **12** is provided for supporting a crystalline sample or substrate **14** positioned for defect detection and mapping according to this invention. A laser beam generator **16**, such as a HeNe laser system capable of generating a laser beam **18** of light with a wavelength of approximately 6,382 Å, is positioned above the stage **12** and preferably oriented to direct a laser beam **18** perpendicularly onto the exposed surface **20** of crystalline material or sample **14**.

A light integrating sphere **22** has two diametrically opposed apertures **24**, **26** positioned to allow transmission of the laser beam **18** through the light integrator sphere **22**, when it is positioned between the laser generator **16** and the sample **14**. However, the light integrator sphere **22** captures light rays **30** that are scattered by the surface **20** of sample **14** through the bottom aperture **26**. The interior surface **28** of the integrator **22** is coated with a material, such as magnesium oxide, that enhances uniform scattering and integrated distribution or diffusion of light rays **30** captured therein through the bottom aperture **26**, as illustrated at **32**. A first photodetector **40** positioned in the side of the light integrator sphere **22** detects the intensity of diffused light **32** in the light integrating sphere **22** and produces an analog signal on lead **42** indicative of the diffused light **32** intensity. As illustrated in the graph in FIG. **8**, and as will be discussed in more detail below, the intensity of the diffused or integrated scattered light **32** in FIG. **1**, thus the amplitude of the signal produced on lead **42**, is a direct measure of etched pit dislocation density (EPD) on the position of surface **20** of sample **14** that is illuminated by laser beam **18**.

At the same time, the near specular components **34**, **36** of light scattered by etched grain boundaries (not shown in FIG. **1**, but described below) in the surface **20** of a polycrystalline sample **14**, along with specular reflection **38**, are allowed by bottom aperture **26** and top aperture **24** to pass through the light integrating sphere **22**, as illustrated in FIG. **1**. The specular component **38**, which is primarily comprised of light reflected by smooth portions, i.e., non-defect portions, of the surface **20** of sample **14**, is blocked and eliminated by an opaque center **46** of a center blocking aperture **44**, while the near specular components **34**, **36** are passed to a converging lens **48** and to a second photodetector **50**. Since most of the light that reaches this second photodetector **50** is the near specular component of light scattered by etched grain boundaries, as will be described in more detail below, a strong electric signal produced on lead **52** by photodetector **50** indicates the presence of a grain

boundary in the portion of the surface **20** of sample **14** that is illuminated by the laser beam **18**.

The signal processing and control unit **60** shown in FIG. **1** processes and stores the signals from the photodetectors **40** and **50** in conjunction with X–Y position information of the stage **12**, as the stage **12** rastors the sample **14** under the laser beam **18**. Therefore, visual displays or other outputs of etch pit density (EPD) or grain boundary mapping can be produced for all or any desired portion of the surface **20** of sample **14**.

Referring now to FIGS. **3***a* and **3***b*, a crystalline sample **14** with etch pits **70** in the surface **20** where dislocation defects occur is shown illuminated by a laser beam **18**. When properly etched, as will be described in more detail below, the etch pits **70** scatter the light in a definite and repeatable pattern **72** illustrated in FIG. **3***b*. The pattern **72** in FIG. **3***b* is the projection of the scattered light beams in FIG. **3***a* on the plane **74**. Essentially, the etch pits **70** scatter most of the incident light from beam **18** in a conical pattern, as show in FIG. **3***a*, between about five degrees (5°) and twenty degrees (20°) from normal. The beams **76** illustrate the inner boundary of this range, and the beams **78** illustrate the outer boundary. Corresponding boundaries **76** and **78** define the primary high intensity light ring **80** of the resulting pattern **72** in FIG. **3***b*. A fringe ring **82** of less intensity surrounds the primary ring **80**, as depicted by scattered fringe rays **84**. The center circle **73** of pattern **72** is essentially devoid of scattered light from the etch pitted surface **20**. All of the scattered light in the primary ring **80** and the fringe ring **82** of pattern **72** is collectively designated as the etch pit scattered light **30** for convenience in describing this invention.

FIG. **3***d* is an illustration of a pattern **72** produced by scattered light from the substantially circular shaped etch pits in FIG. **3***c*. Such circular shaped etch pits indicate dislocation defects that are oriented substantially normal to the surface, and, when etched as described below for this invention, will always produce the characteristic circular pattern of etch pit scattered light shown in FIG. **3***d* and depicted in FIG. **3***b*. In contact, dislocation defects that are oriented oblique to the surface produce elliptical shaped etch pits, as shown in FIG. **3***e*. Such elliptical etch pits produce an elliptical shaped pattern of etch pit scattered light, as shown in FIG. **3***f*. A mixed set of etch pits comprising both circular and elliptical shapes in close proximity, as shown in FIG. **3***g*, will produce an irregular shaped etch pit scattered light pattern, as shown in FIG. **3***h*.

Referring now momentarily to FIGS. **1** and **2**, the bottom aperture **26** of the light integrating sphere **22** is sized and positioned to admit most of the etch pit scattered light **30**, for example, about 20 to 40 degrees from normal. The top aperture **24** is preferably sized and positioned to not allow light rays **30** scattered from the surface **20** wider than about five degrees from normal to pass therethrough. In other words, the top aperture **24** preferably coincides substantially with the void center circle **73** of the etch pit scattered light pattern **72** of FIG. **3***b*. Consequently, most of the etch pit scattered light **30** is captured and retained by light integral sphere **22** where it is integrated to produce intense diffuse light **32** to induce a strong signal from photodetector **40**. At the same time, very little of the etch pit scattered light **30** escapes through top aperture **24** to reach the second photodetector **50**, so any signal produced by photodetector **50** is not influenced significantly by etch pit scattered light **30**.

Referring now primarily to FIGS. **4***a* and **4***b*, a grain boundary **90** in a polycrystalline material, when etched as described below, will produce a V-shaped groove **92** that is essentially one-dimensional and runs the length of the grain boundary **90** along the surface **20** of the sample **14**. Light incident on such etch grain boundaries **90** is scattered in a substantially fan-shaped distribution **94** in a plane that is perpendicular to the surface **20**. When the fan-shaped scattered light distribution **94** is projected onto a plane **96** that is parallel to surface **20**, it forms a pattern, **98** of divers elongated spots **101**, **102**, **103**, **104**, **105**, **106**, **107**, **108** . . . , as illustrated in FIG. **4***b*. The circular center spot **100** is substantially specular reflection or retroreflection from the V-shaped groove **92** or surface **20**.

Referring again, to FIG. **2**, a polycrystalline sample **14** is illustrated on X–Y stage **12** with a grain boundary **90** and a V-shaped etch groove **92** where the grain boundary **90** intersects the surface **20**, similar to that illustrated in FIG. **4***a* and described above. The surface **20** also has etch pits **70** where dislocations intersect the surface **20**; however, the size and density proportions are not illustrated to scale because of limitations inherent in these kinds of illustrations for microscopic features. As shown in FIG. **2**, a fairly wide or large diameter beam **18** is used to illuminate a sufficiently large portion of the surface **20** to obtain a good statistical sample of etch pits. Therefore, there is no attempt to focus the beam **18** to a point on the surface **20**. In fact, it is preferred that a point focus is avoided. Generally, it is preferred to include at least two hundred etch pits in the illuminated area, which usually requires a beam **18** diameter of about 500 to 1,000 μm.

As also shown in FIG. **2** for purposes of illustrating additional features of this invention, the V-shaped grain boundary etch groove **90** is positioned in the area illuminated by beam **18**. Consequently, both an etch pit scattered light pattern, such as one of the patterns illustrated in FIGS. **3***a* through **3***h*, and a boundary grain etch scattered light pattern, such as the pattern **98** illustrated in FIGS. **4***a* and **4***b*, are produced together. The result is a combination etch pit light scattered pattern, such as pattern **72** of FIGS. **3***a* and **3***b*, combined with a boundary grain etch pattern **98** of FIGS. **4***a* and **4***b*. The combination of these patterns **72** and **98** is illustrated in FIG. **5**. The specular components **38** of FIGS. **2** and **4***a* that produce center spot **100** of FIGS. **4***b* and **5**, and the near specular components **34** and **36** of FIGS. **2** and **4***a* that produce the inside spots **101** and **102**, respectively, of FIGS. **4***b* and **5** deviate from specular normal for the most pan less than five degrees (5°). Therefore, as best illustrated in FIGS. **2** and **5**, those light components **34**, **36**, and **38** and their corresponding spots. **100**, **101**, and **102** are for the most part confined in the center area **73** that is substantially devoid of etch pit scattered light **30**. Therefore, as shown in FIG. **2**, the top aperture **24** of the light integration sphere **22** allows the light components **34**, **36** and **38** scattered or reflected by the boundary grain etch groove **90** to pass out of the light integrating sphere **22**. Therefore, the limited pattern shown in FIG. **6** comprising only spots **100**, **101**, and **102** reaches the plane **112** of the center block aperture **44** in FIG. **2**. The specular component **38** is subsequently blocked and eliminated from the system **10** by the center block aperture **44** as mentioned above. Consequently, only the near specular light components **34** and **36** scattered by the boundary grain etch groove **90** pass through the light integrating sphere **22** and reach the

second photodetector **50**. Substantially all of the etch pit scattered light **30** is captured in the light integrating sphere **22**, as described above, and is detected only by the first photodetector **40**. As a result, the signal produced by the second photodetector **50** is essentially the result of a grain boundary **90** in the area of illumination by beam **18**. This signal on lead **52**, therefore, can be processed, discriminated, and used for detecting and mapping grain boundaries in polycrystalline materials as distinct from dislocation defects.

The light components **34**, **36**, and **38** that pass through the top aperture **24** of light integrating **22** are collimated by a lens **114**, reflected out of the normal path by beam splitter or partially silvered mirror **116**, and directed to the center block aperture **44**. As mentioned above, the projected light components **34**, **36**, and **38** that reach plane **112** of aperture **44** are substantially as show in FIG. **6**. The aperture **44** has an annular opening **45** large enough to pass substantial portions of the near specular components **34** and **36** and a center block **46** large enough to block the specular component **38**. A convex lens **118** converges and focuses the near specular components **34** and **36** onto the second detector **50**, so that the projection of the light, essentially comprising those near specular components **34** and **36**, appears as the near spots **101** and **102**, illustrated in FIG. **7**, sans the specular component **38** and circular center spot **100**. It is important to eliminate the specular component **38**, because a substantial portion of the specular component **38** can be, and probably is, light reflected from smooth, nondefect areas of the surface **20** of the polycrystalline material **14** adjacent the grain boundary **90**, thus could also be present in the signal from the second photodetector **50**, even if there is no grain boundary in the area of illumination. Elimination of the center component **38** insures that the only signal from photodetector **50** is from a grain boundary defect.

It may be noted that the components of the grain boundary scattered light **94**, that produce the intermediate spots **103–108** in the pattern **98**, as illustrated in FIGS. **4***a*, **4***b*, and **5**, will not pass through the top aperture **24** of light integrating sphere **22**, and thus will be captured along with the etch pit scattered light **30** inside the light integrating sphere **22** of FIG. **2**. If those intermediate components of the grain boundary scattered light **94** are intense enough, they can affect and cause erroneous signals of etch pit density (EPD) from the first photodetector **40**. In fact, if the beam **18** was narrowed to a point, and if the point was focused on the grain boundary etch **92**, the resulting grain boundary scattered light **94** intensity inside the light integrating sphere **22** would probably predominate and could even swamp out any etch pit scattered light intensity. Actually, the first photodetector **40** could operate as a grain boundary **90** detector in that configuration.

On the other hand, the effect of the intermediate components of grain boundary scattered light **94** can be minimized in several ways. First, the incident beam **18** can be operated with a wide diameter; thus illuminating a larger area of etch pit defects **70** on the surface **20** of the polycrystalline material **14**. Such wide area illumination increases substantially the intensity of etch pit scattered light **30** inside the light integrating sphere **22** as compared to the grain boundary scattered light **94**. Further, since the problem of the grain boundary scattered light **94** is essentially one-dimensional, while the pattern of the etch pit scattered light **30** is two dimensional, a larger area illumination can minimize the effect of the grain boundary scattered light inside the light integrating sphere **22** that is detected by the first photodetector **40**. Additional electronic signal conditioning and processing as described below, can further minimize the residual effects of the grain boundary scattered light detected by first photodetector **40**.

Another adjustment that can minimize the effects of divers components of grain boundary scattered light **94** is to increase the distance between the bottom aperture **26** of the light integrating sphere **22** and the surface **20** of the polycrystalline material **14**. Increasing this distance can allow the fartherest-out components of the grain boundary scattered light **94**, which spread at a large angle to normal, i.e., a smaller angle to the surface **20**, to pass beneath the light integrating sphere **22** and avoid capture by the bottom aperture **26**. Of course, raising the light integrating sphere **22** to an even larger distance off the surface **20** could cause the outer fringes of the etch pit scattered light **30** to be excluded, too, which could be counterproductive. Widening the bottom aperture **26**, along with increasing the distance between the light integrating sphere **22** and the surface **20**, could help to capture the outer fringes of the etch pit scattered light **30**, but wider apertures can also allow diffuse light inside the light integrating sphere **22** to escape, thus lowering intensity and signal strength from the first photodetector **40**. Therefore, there is a balance that can be found and maintained between incident beam **18** size, distance between light integrator **22** and size of surface **12**, and apertures **24** and **26** that provides optimum results and signals for a particular system **10** used in conjunction with a particular polycrystalline material **14**. A larger beam **18** size also increase the size of the increments needed to scan a sample **14**, as well as the statistical base of the method used in this invention which detects statistical defect densities, instead of detecting and counting individual etch pits. Therefore, the larger rastor increments along with the increased statistical base of defect densities that result from a larger sized beam **18**, as described above, can combine to increase substantially the defect mapping speed and efficiency according to this invention.

Referring again to FIG. **1**, the etch pit density (EPD) signal on lead **42** is directed to a final amplifier circuit **120**, where it is conditioned, filtered, cleaned up, and amplified. Likewise, the grain boundary signal on lead **52** is directed to a second amplifier circuit **122**, where it is also conditioned, filtered, cleaned up, and amplified. Both signals are then directed via leads **124**, **126**, respectively, to an algebraic summing circuit **128**, where the etch pit or dislocation signal is algebraically summed with (subtracted from) the product of an empirically determined constant times the grain boundary signal to produce a new signal that is indicative of grain boundary for mapping purposes. Initialization can be made on a location that is known to be all dislocation defects and no grain boundary defects. In the opposite mode, the grain boundary signal can be algebraically summed with the product of a constant times the dislocation signal to produce a net signal that is indicative of dislocation density.

The dislocation density and grain boundary signals are fed into a computer **130** along with X–Y position information from the stage **12** via connection **132**. The data are stored in a high-speed buffer memory. Commercially available computer software, such, as "Lab View," produced by National Instruments, of 6504 Bridgepoint Parkway, Austin, Tex. 78820 "Delta

Graph," produced by Deltapoint, Inc. of 2 Harris Court, Suite B-1, Monterey, Calif. 93940 can be used, with appropriate modifications for particular system hardware and other parameters that would be within the capabilities of persons skilled in this art, to make a map of the dislocation densities and grain boundaries in the material **14**, and detailed analysis or displays can be made on the monitor **134** and by a color printer or plotter **136**. For example, a defect density map produced with the system **10** according to this invention is shown in FIG. **9**. Alternatively, the grain boundary data can be used to produce a grain boundary map. For example, the grain boundaries shown in the microscopic photograph of FIG. **10***a* was scanned with the system **10** of this invention, and the grain boundary map in FIG. **10***b* was produced with the data. Alternatively, analog signals from the photodetectors **40** and **50** can be processed by the analog display controller **138** to directly display the dislocation and grain boundary distributions on a storage oscilloscope **140** or an X–Y recorder **142**.

The preferred etching process for use with this invention is a variation of the chemical etching procedure published by the inventor in B. L. Sopori, "A New Etch for Polycrystalline Silicon," *J. Electrochem. Soc.*: SOLID-STATE SCIENCE AND TECHNOLOGY, Vol. 131, No. 3, Page 667 (1984), which produces substantially equal volume etch pits, regardless of dislocation orientation. The following mixtures are used in defect etching:

1) 1:1 of hydrofluoric acid (HF) to water, referred to as the HF rinse.
2) 1:1 of nitric acid (HNO_3) to water, referred to as the HNO_3 rinse.
3) 36:15:2 of hydrofluoric acid to acetic acid (CH_3COOH) to nitric acid, referred to as Sopori etch.
4) 2:1 of sulfuric acid (H_2O_2), referred to as Piranha.

The steps of this procedure include:

a) Make sure the sample to be etched is clean by checking it under the microscope. If the sample is not clean (there are blobs visible on the surface), it should be cleaned.
b) Heat the Piranha on the hot plate to 80° C. (a setting of "LOW"). It takes approximately 15–20 minutes to heat the Piranha. It is hot enough when it begins to gently bubble. Do not let the Piranha reach a fun boil. If the Piranha was just mixed it does not need to be heated; the heat generated in mixing the H_2SO_4 and H_2O_2 is adequate.
c) Place the sample in a Teflon sample holder and then let the sample sit in the Piranha for 15 to 30 minutes. The Piranha cleans off any remaining small bits of wax or dirt on the surface of the sample. After the sample has soaked, rinse it off with a stream of deionized (DI) water and blow it dry with the air gun.
d) The HF rinse, the HNO_3 rinse, and the etch should be poured from their storage bottles into separate, labeled, plastic one-liter beakers. Fill a two-liter beaker with DI water for rinsing the samples after etching.
e) Dip the sample into the etch and gently wave it back and forth for approximately 30 seconds after bubbles begin to form. Remove the sample from the etch and immediately dip it into the beaker of DI water. Gently wave the sample back and forth for several seconds and theft rinse it with a stream of DI water. Dry the sample with the air gun.
f) Dip the sample in the HNO_3 rinse and gently wave it back and forth for approximately 15 seconds. Remove the sample and dip it into the beaker of DI water for several seconds. Rinse the sample in a stream of DI water and then dry it with the air gun.
g) Dip the sample in the HF rinse and wave it back and forth for approximately 15 seconds. Remove the sample and dip it into the beaker of DI water for several seconds. Rinse the sample in a stream of DI water and then dry it with the air gun.
h) After etching, the HF rinse, the HNO_3 rinse, and the etch should be poured back into their storage bottles. The bottles should then be placed together in the square Nalgene secondary container labeled "Defect Etching and Chem Polishing" in the acid hood. Replace the cover on the secondary container. The Piranha should be left on the hot plate and covered after it has cooled.
i) Using DI water, rinse out the beakers from the HF rinse, the HNO_3 rinse, and the etch. Place the beakers upside down in the back right hand corner of the hood (by the sink) to dry. Wipe off the acid hood countertop.
j) Make an entry in the Etch log stating the date, your initials, the number of samples you etched, and any general comments about what happened when you etched.

There is not as yet a set number of times that the HF rinse, the HNO_3 rinse, the etch, and the Piranha can be reused. Part of the purpose of the Etch Log is to establish this time.

An alternate embodiment system **200** is shown in FIG. **11**. In this embodiment, the light integrating sphere **22** is positioned far enough away from the surface **20** to accommodate the collimating lense **114** and beam splitter **116** between the light integrating sphere **22** and surface **20**. The beam splitter **116** diverts pan of the grain boundary scattered light **96** and etch pit scattered light **30** toward the second photodetector **50** before reaching the light integrating sphere **22**. In this embodiment, the blocking aperture **244** passes only the outer portions **210** and **212** of the grain boundary scattered light **96** to the second detector **50** and blocks everything else. The bottom aperture **26** of light integrating sphere **22** is large enough to admit the etch pit scattered light **30**, but small enough to block the outer portions of grain boundary scattered light **96** that passes through beam splitter **116**. The near specular portions **34** and **36** of grain boundary scattered light **96** that pass through the beam splitter **116** also pass out the to aperture **24** of light integrating sphere **22**. Therefore, it is only the intermediate portions of grain boundary scattered light that enters and gets captured in the light integrating sphere **22** along with the etch pit scattered light **30**. This intermediate portion of grain boundary scattered light, as in the embodiment **10** described above, is not sufficient to swamp or degrade the intensity signal for etch pit scattered light **30** as long as the incident beam **18** illuminates a wide enough area on surface **20**.

The foregoing description is considered as illustrative only of the principles of the invention. Furthermore, since numerous modifications and changes will readily occur to those skilled in the art, it is not desired to limit the invention to the exact construction and process shown as described above. Accordingly, all suitable

modifications and equivalents may be resorted to falling within the scope of the invention as defined by the claims which follow.

The embodiments of the invention in which an exclusive property or privilege is claimed are defined as follows:

1. A method for detecting and distinguishing between a first type of defect and a second type of defect in the surface of a crystalline material, comprising the steps of:

preparing said surface in such a manner that said first type of defect scatters incident light in a first pattern and said second type of defect scatters incident light in a second pattern;

illuminating said surface with incident light and scattering said incident light from said surface to create said first pattern and said second pattern;

separating at least some of the scattered light in said first pattern from at least some of the scattered light in the second pattern;

detecting the scattered light of said first pattern as an indication of said first type of defect in the surface of the crystalline material;

and detecting the scattered light of said second pattern as an indication of said second type of defect in the surface of the crystalline material.

2. The method of claim 1, including the step of preparing said surface in such a manner that:

said first type of defect scatters incident light in a first pattern that has an area of intense scattered light and an area of substantially no scattered light; and

said second type of defect scatters incident light in a second pattern that at least partially occupies said area in said first pattern that has substantially no scattered light from said first type of defect.

3. The method of claim 2, including the step of preparing said surface in such a manner that:

said first type of defect scatters incident light in a first pattern that would project a primarily two-dimensional image shape on an intersecting plane; and

said second type of defect scatters incident light in a second pattern that would project a primarily one-dimensional image shape on an intersecting plane.

4. The method of claim 3, including the step of detecting the scattered light of said second pattern that is in said area of no substantially scattered light in said first pattern as an indication of the presence of said second type of defect in the surface of the crystalline material that is illuminated.

5. The method of claim 4, including the steps of:

capturing most of the scattered light in said first pattern in a light integrating sphere and creating an integrated diffuse light in said sphere while substantially precluding the scattered light of said second pattern that is in said area of substantially no uttered light in said first pattern from being captured in said light integrating sphere; and

detecting diffuse light in said light integrating sphere as an indication of the presence of said first type of defect in the surface of the crystalline material that is illuminated.

6. The method of claim 5, including the steps of illuminating a portion of said surface of said crystalline material that is large enough to cause the scattered light in the first pattern to substantially swamp any scattered light in said second pattern that gets captured in said light integrating sphere such that the diffuse light detected in said light integrating sphere is practically an indication of only said first type of defect in said surface of said crystalline material.

7. The method of claim 6, including the steps of preparing said surface in such a manner that said first type of defect scatters incident light in said first pattern that has an area of intense scattered light in an intermediate specular range and an area of substantially no scattered light in a specular range and a near specular range.

8. The method of claim 7, including the step of preparing said surface in such a manner that said second type of defect scatters incident light in said second pattern that has at least some scattered light in said near specular range.

9. The method of claim 8, including the step of capturing most of the scattered light in the intermediate specular range in said light integrating sphere and allowing most of the scattered light in said near specular range to pass through the light integrating sphere.

10. The method of claim 9, including the step of detecting the scattered light that passes through said light integrating sphere as an indication of the presence of a second type of defect in the surface of said crystalline material.

11. The method of claim 10, including the step of blocking light in the specular range that passes through said light integrating sphere from being detected along with the light in the near specular range.

12. The method of claim 7, including the step of preparing said surface in such a manner that said second type of defect scatters incident light in said second pattern that has at least some scattered light in a far specular pattern.

13. The method of claim 12, including the step of capturing most of the scattered light in the intermediate specular range in said light integrating sphere and precluding most of the scattered light in said far specular region from entering said light integrating sphere.

14. The method of claim 13, including the step of detecting the scattered light that is precluded from entering the light integrating sphere as an indication of the presence of said second type of defect in the surface of the crystalline material.

15. The method of claim 5, including the step of illuminating a portion of said surface of said crystalline material that is small enough that there is insufficient light scattered from said first type of defect to prevent light scattered from said second type of defect from causing substantial changes in diffuse light detected in said light integrating sphere such that a substantial increase in diffuse light detected in tile light integrating sphere can indicate a second type defect in the area of the surface of the crystalline material that is illuminated.

16. The method of claim 1, including tile step of preparing said surface in such a manner that dislocation defects in the surface of the crystalline material scatter light in said first pattern.

17. The method of claim 16, including the step of preparing said surface in such a manner that etch pits of about equal volume are created at substantially all dislocation defects that interest said surface.

18. The method of claim 1, including the step of preparing said surface in such a manner that grain boundary defects at the surface of the crystalline material scatter light in said second pattern.

19. The method of claim 1, including the steps of:

selecting silicon as the crystalline material;

cleaning the surface of the crystalline material by application of a mixture of sulfuric acid and hydrogen peroxide;

dipping the crystalline material in an etch solution comprising hydrofluoric acid, acetic acid, and nitric acid to create etch pits at dislocation sites and V-grooves at grain boundary sites in said surface;

rinsing the crystalline material in nitric acid to form a silicon dioxide coating on the surface;

applying hydrofloric acid rinse to the crystalline material; and

rising the crystalline material with water.

20. The method of claim **1**, including the steps of:

detecting said first type of defect and said second type of defect at a plurality of locations on said surface;

collecting and recording information relating to said first type of defect and said second type of defect at each location in conjunction with information that identifies the position of each location in relation to the positions of other ones of the locations;

creating a map of the surface of the crystalline material using the defect type and location information that displays either the first type of defect, the second type of defect, or both the first and second types of defects in scaled spatial relation to each other.

* * * * *