US005107649A

United States Patent [19]

Benson et al.

[11] Patent Number: 5,107,649

[45] Date of Patent: Apr. 28, 1992

[54] COMPACT VACUUM INSULATION EMBODIMENTS

[75] Inventors: **David K. Benson**, Golden; **Thomas F. Potter**, Denver, both of Colo.

[73] Assignee: **Midwest Research Institute**, Kansas City, Mo.

[21] Appl. No.: **473,641**

[22] Filed: **Feb. 1, 1990**

Related U.S. Application Data

[62] Division of Ser. No. 181,926, Apr. 15, 1988.

[51] **Int. Cl.**[5] **E04C 2/34**

[52] **U.S. Cl.** **52/309.4**; 52/309.7; 52/406; 52/791; 52/809; 428/69; 428/71

[58] **Field of Search** 52/809, 808, 807, 577, 52/576, 404, 791, 406, 309.9, 309.4, 309.7; 428/69

[56] **References Cited**

U.S. PATENT DOCUMENTS

1,239,770	9/1917	Coleman	52/576
2,233,190	2/1941	Amorosi	52/576
2,989,156	6/1961	Brooks et al. .	
3,151,365	10/1964	Glaser et al. .	
3,151,712	10/1964	Jackson	52/792
3,179,549	4/1965	Strong et al. .	
4,270,329	6/1981	Moore	52/576
4,444,821	4/1984	Young et al. .	
4,468,423	8/1984	Hall .	
4,486,482	12/1984	Kobayashi et al. .	
4,683,154	7/1987	Benson et al. .	

OTHER PUBLICATIONS

Untitled, undated report by ERNO Space Technology GmbH, "Development and Testing of Vacuum Super Insulation for Use in Residential and Industrial Construction", by Kurt Reinhard of ERNO Space Technology GmbH, Bremen, West Germany, Mar. 1977.

Primary Examiner—John E. Murtagh
Attorney, Agent, or Firm—Ken Richardson

[57] **ABSTRACT**

An ultra-thin compact vacuum insulation panel is comprised of two hard, but bendable metal wall sheets closely spaced apart from each other and welded around the edges to enclose a vacuum chamber. Glass or ceramic spacers hold the wall sheets apart. The spacers can be discrete spherical beads or monolithic sheets of glass or ceramic webs with nodules protruding therefrom to form essentially "point" or "line" contacts with the metal wall sheets. In the case of monolithic spacers that form "line" contacts, two such spacers with the line contacts running perpendicular to each other form effectively "point" contacts at the intersections. Corrugations accommodate bending and expansion, tubular insulated pipes and conduits, and preferred applications are also included.

4 Claims, 9 Drawing Sheets

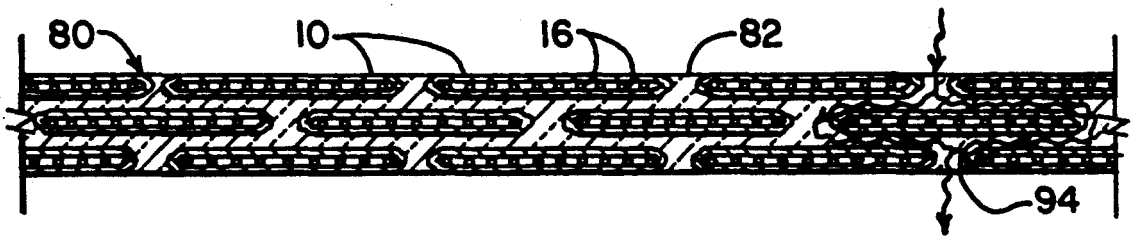

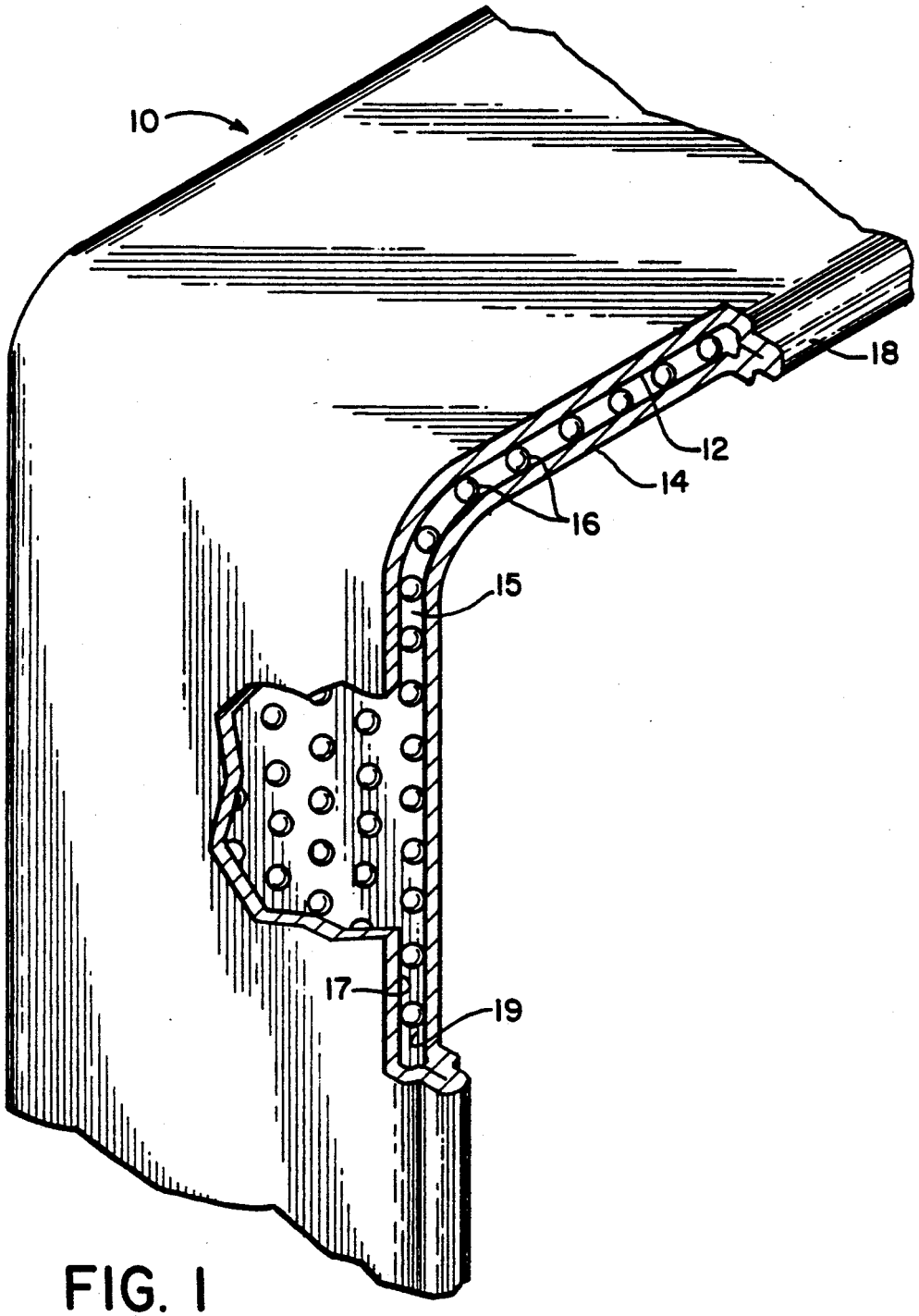

FIG. 1

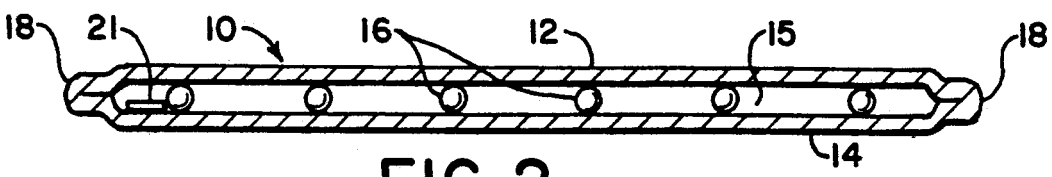

FIG. 2

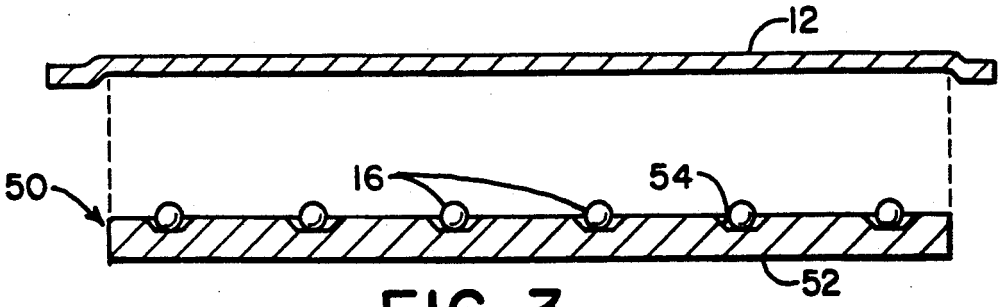

FIG. 3

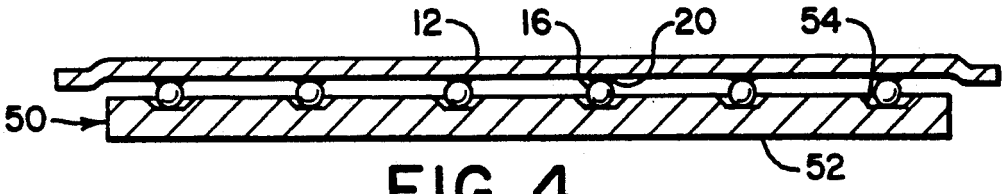

FIG. 4

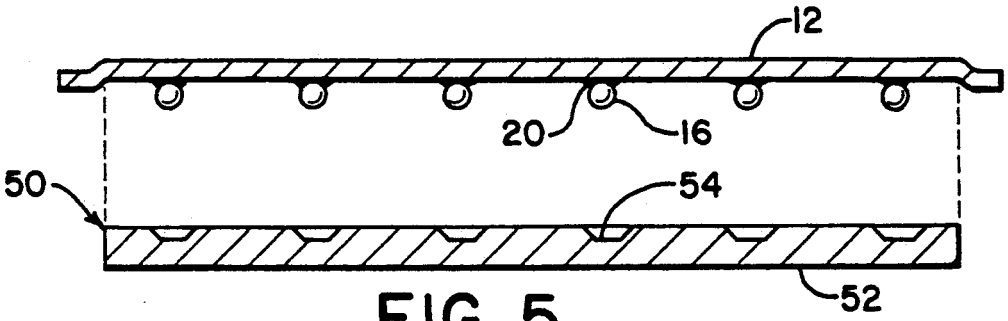

FIG. 5

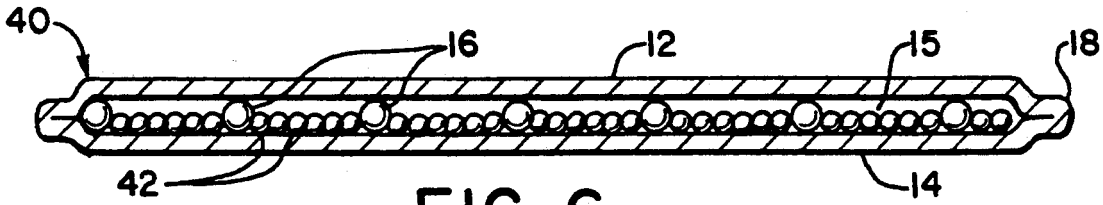

FIG. 6

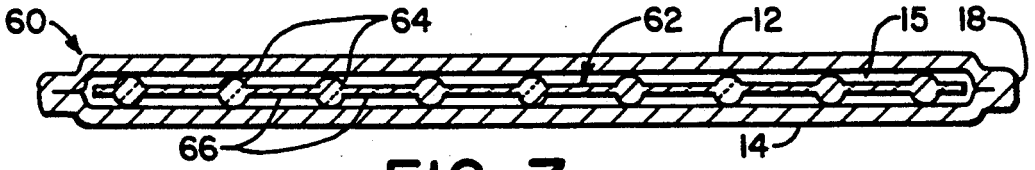

FIG. 7

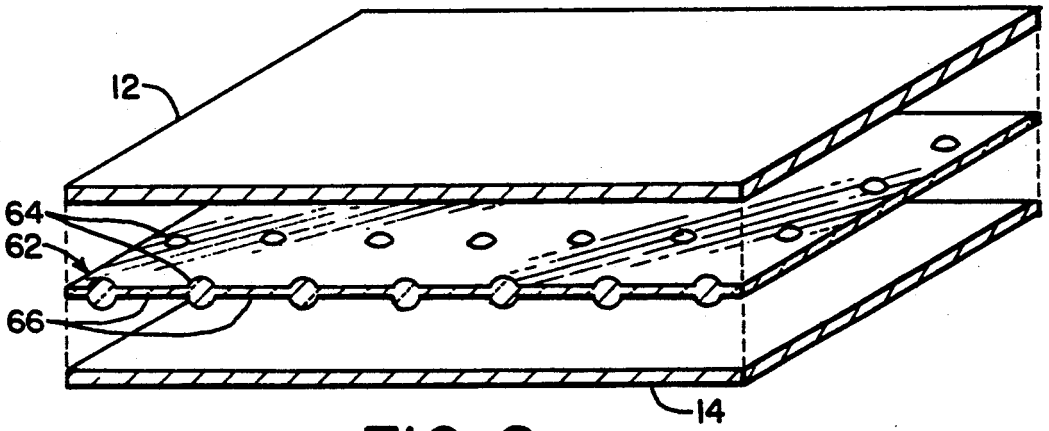

FIG. 8

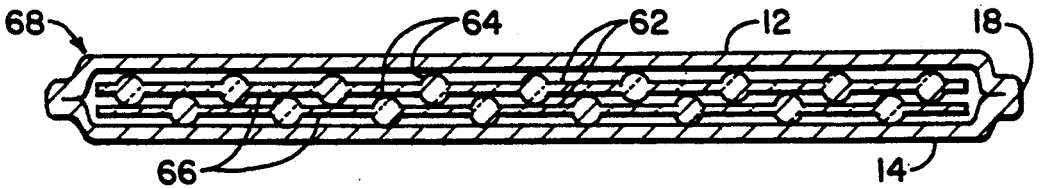

FIG. 9

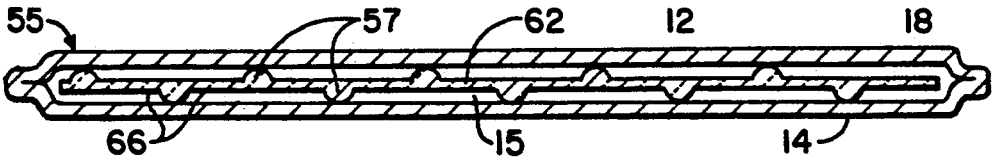

FIG. 10

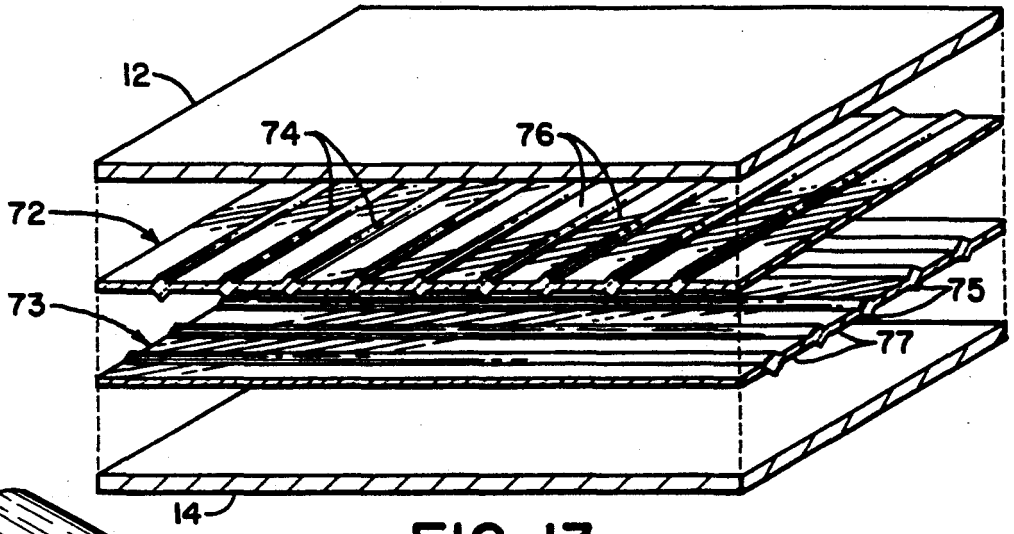

FIG. 13

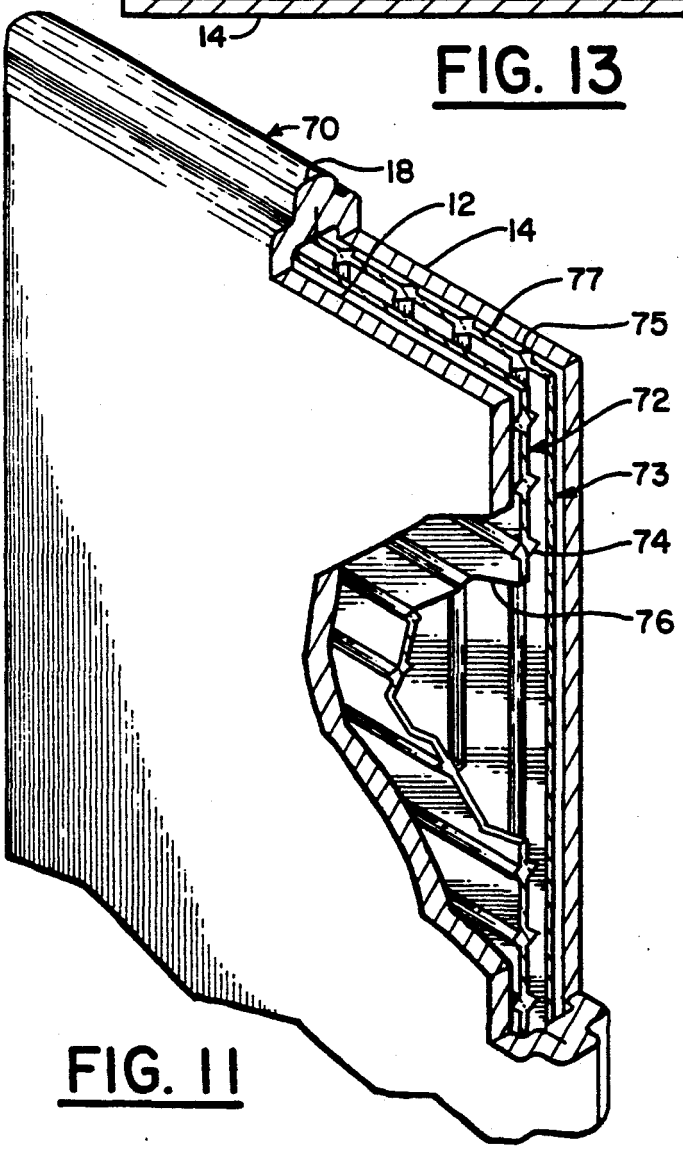

FIG. 11

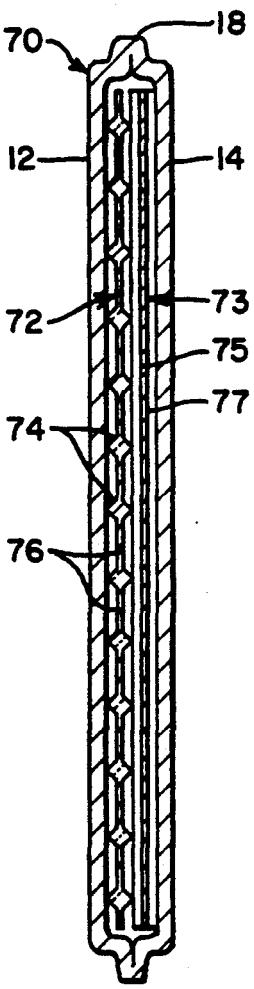

FIG. 12

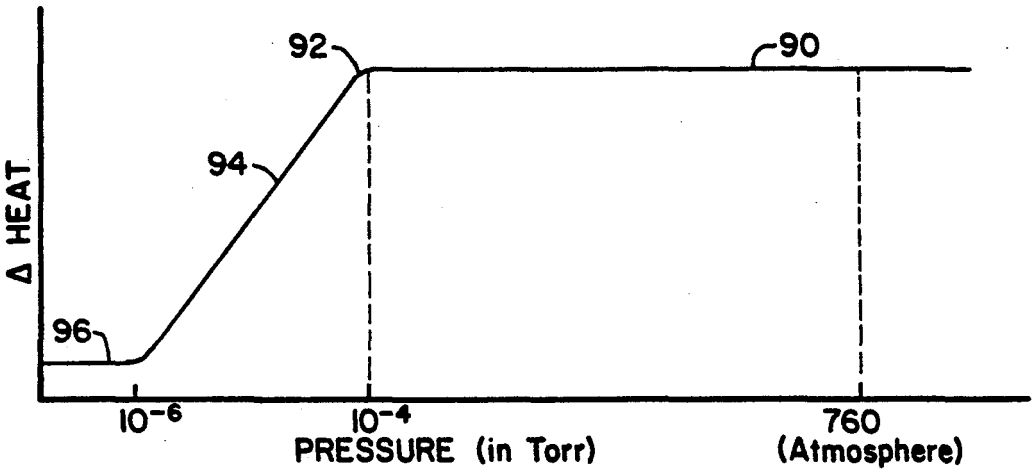

FIG. 14

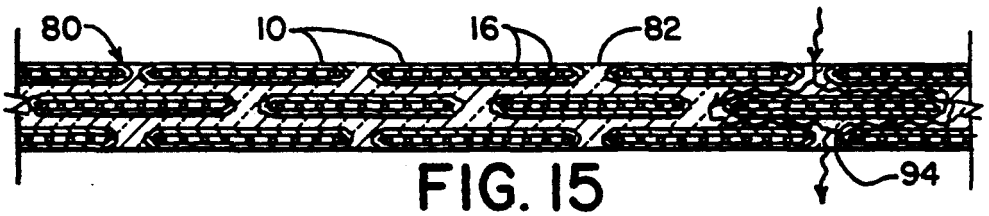

FIG. 15

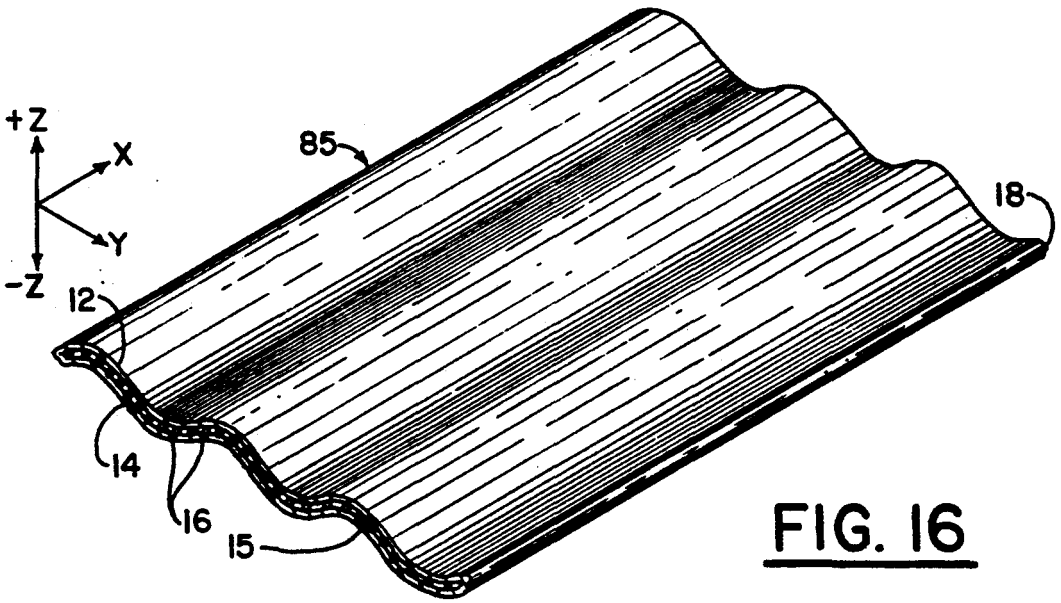

FIG. 16

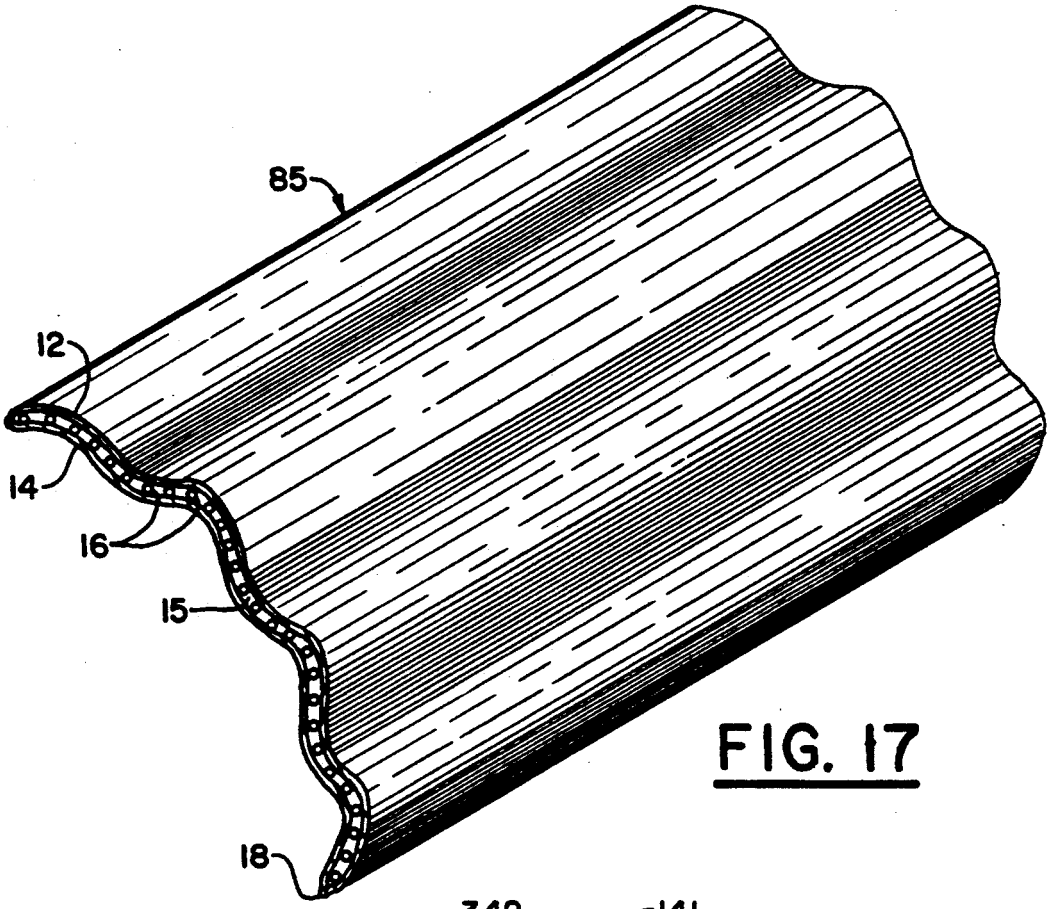

FIG. 17

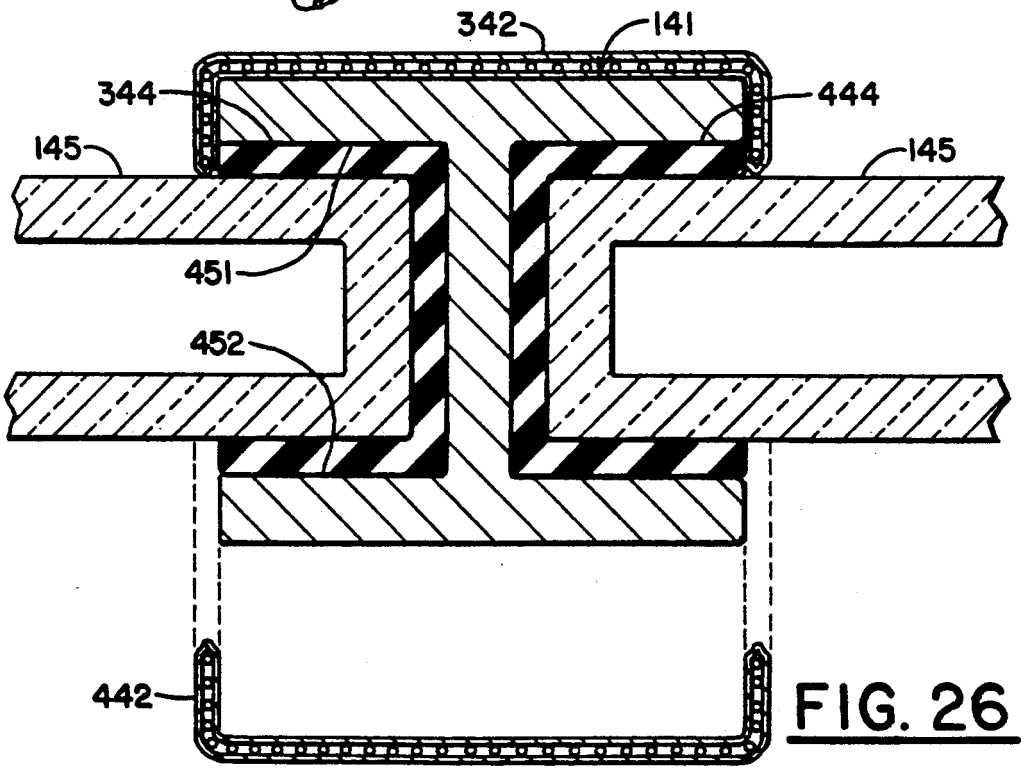

FIG. 26

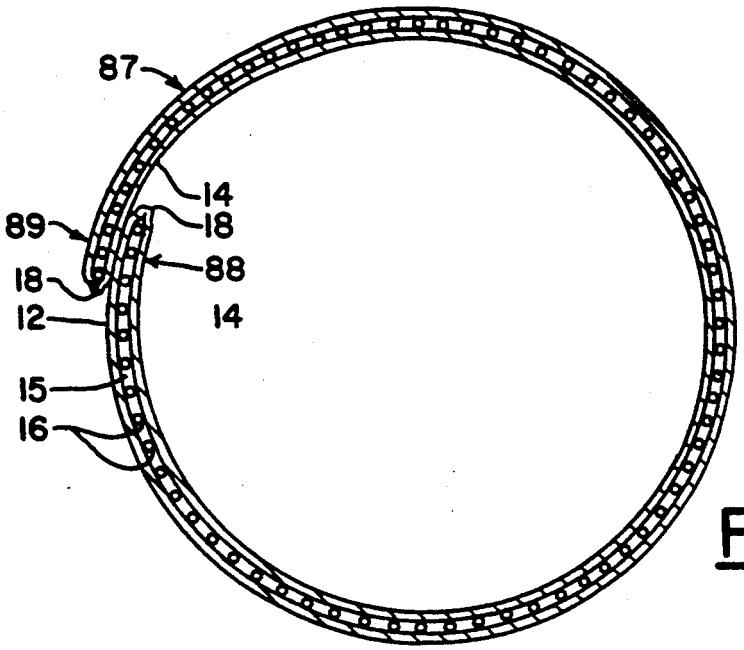

FIG. 18

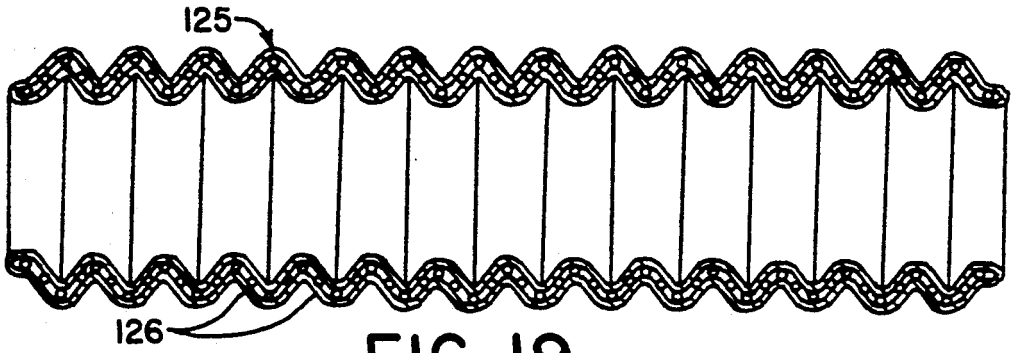

FIG. 19

FIG. 20

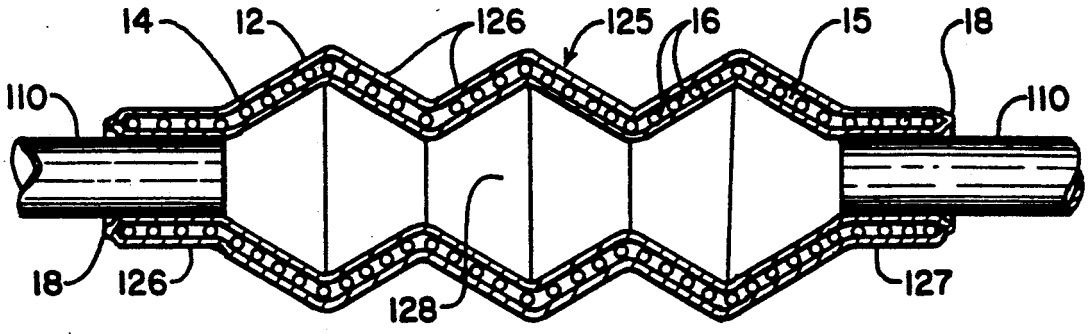

FIG. 21

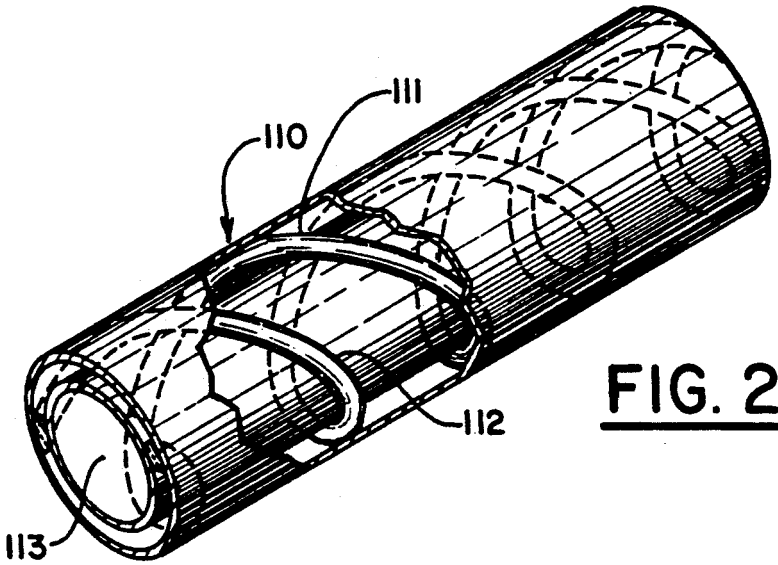

FIG. 22

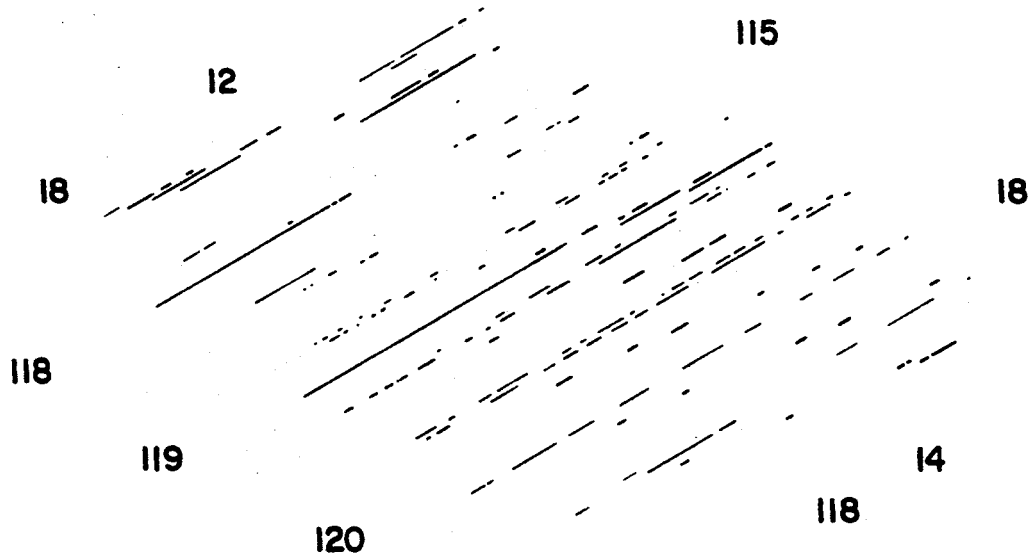

FIG. 23

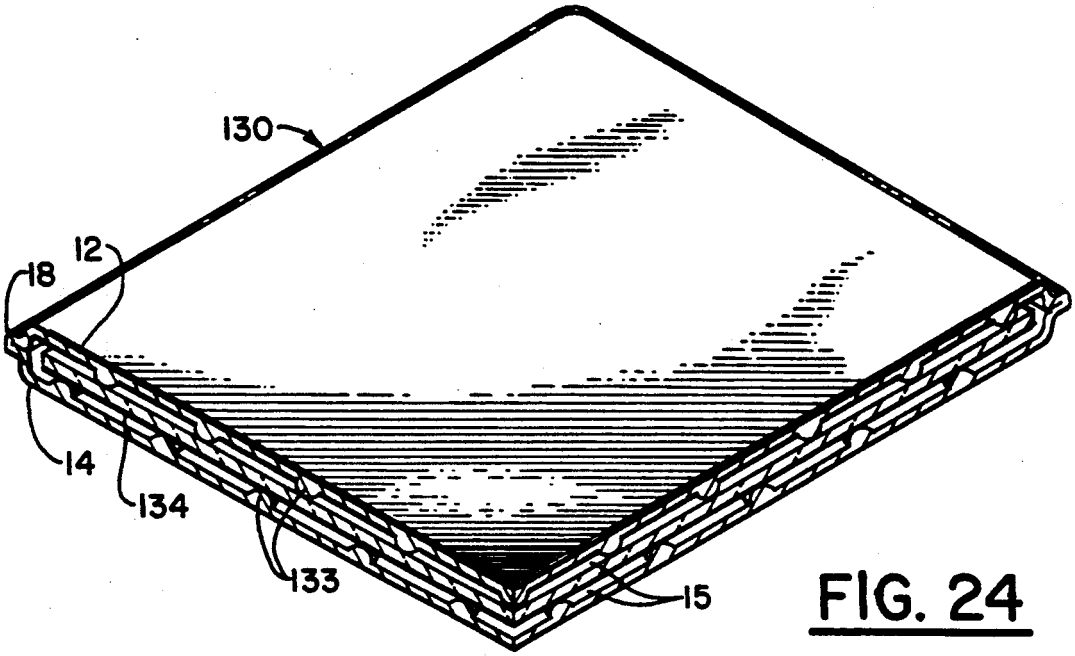
130
12
18
14
134
133
15

FIG. 24

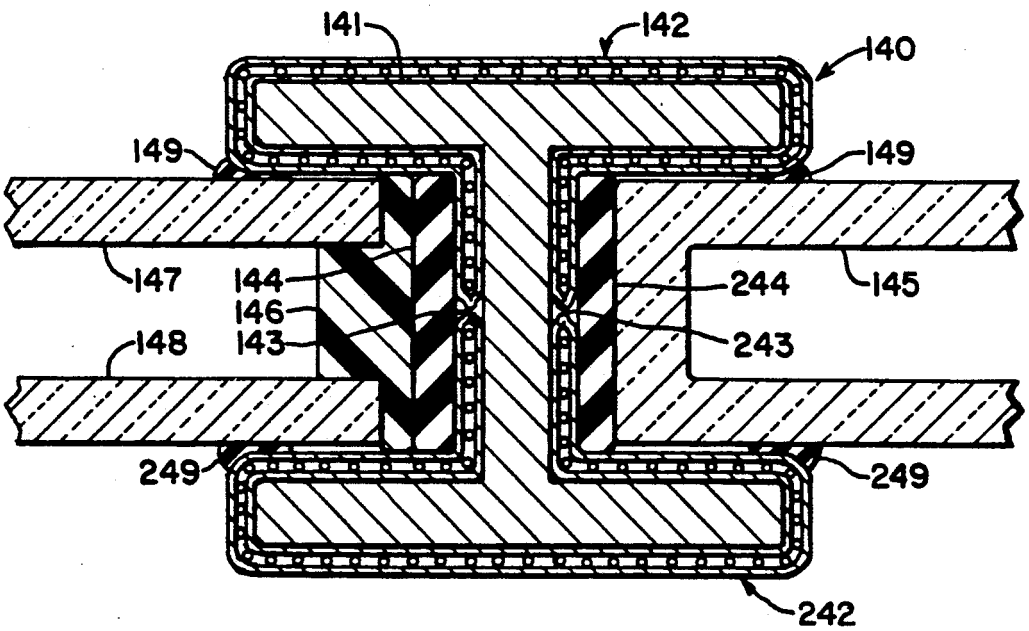
141
142
140
149
149
147
144
146
143
244
145
243
148
249
249
242

FIG. 25

COMPACT VACUUM INSULATION EMBODIMENTS

The U.S. Government has rights in this invention under Contract No. DE-AC02-83CH10093 between the U.S. Department of Energy and the Solar Energy Research Institute, a Division of Midwest Research Institute.

CROSS REFERENCE TO RELATED APPLICATION

This patent application is a divisional application of U.S. patent application, Ser. No. 181,926, filed Apr. 15, 1988, entitled Compact Vacuum Insulation.

BACKGROUND OF THE INVENTION

1. Field of the Invention

The present invention is generally related to insulation panels, and more specifically to vacuum insulation panels that have a high degree of resistance to heat transfer and are thin and bendable to form curved insulation panels, applications of such panels, and methods of making same.

2. Description of the Prior Art

There is nothing new about insulation or in the use of vacuum panels for insulation. There is, however, a rapidly emerging need for much improved insulation in terms of a combination of better insulation effectiveness, lighter weight, thinner, more durable, and more bendable or formable insulation products. The needs for such better insulation products emanate from such diverse areas as space-related vehicles and equipment, extremely low-temperature cryogenic vessels and pipes in scientific and industrial applications, and even common household appliances. For example, space vehicles and equipment to be launched into space need a very high quality of insulation to protect humans and equipment, yet there is no room for typically bulky insulated walls and panels.

State-of-the-art insulation for cryogenic applications is complex and expensive and still has significant shortcomings. For example, an insulation structure known as "cryopumped insulation" is often used for insulating cryogenic vessels and pipes. Such cryopumped insulation comprises many laminated layers of impervious material sealed at the edges and positioned adjacent the cryogenic material; e.g., liquid nitrogen. The liquid nitrogen is so cold that it causes the air in adjacent sealed spaces between the laminated sheets to liquify, thus leaving a partial vacuum in the spaces. This air-liquifying phenomenon occurs through adjacent layers a sufficient depth into the laminated insulation structure such that heat transfer is inhibited by the adjacent vacuum layers created or "cryopumped" in the insulation structures.

While such "cryopumped" insulation works quite well at the extremely low temperatures of cryogenic materials, like liquid nitrogen, which are cold enough to liquify air, it does not insulate at all in normal temperature ranges. Also, such "cryopumped" insulation is relatively thick and bulky, typically requiring several inches of thickness to be effective, and it is expensive and difficult to form into desired shapes or contours. Yet, prior to this invention, there were no thin, non-bulky, formable, yet equally effective alternatives.

On the domestic scene, both consumers and governments are demanding that manufacturers of home appliances, such as refrigerators, water heaters dishwashers, washing machines, clothes dryers, and the like, make these appliances much more energy efficient. For example, the California Energy Commission has mandated a 50% reduction in the energy use of refrigerator/freezers to be sold in that state in 1992. That mandated reduction in energy usage, while maintaining current dimensions, is not achievable without significant improvement in side-wall thermal efficiencies. Current technology could accommodate the reduction in heat transfer through the side walls of appliances by making insulated wall panels three times as thick. However, people do not want refrigerators with walls a foot thick. Architectural designs of homes and apartments, door widths, and the like practically prohibit increasing external dimensions of home appliances, and decreasing useable interior space will meet with much consumer dissatisfaction and resistance.

Thinner insulation panels that improve insulating effectiveness would solve these problems, but ultra-thin, highly effective, and long-lasting insulation panels are not easy to make. In fact, prior to this invention, each of these criteria, i.e., ultra-thin, highly effective, and long-lasting, has been mutually exclusive of at least one of the others.

There have been some notable attempts prior to this invention to improve insulation effectiveness with somewhat thinner panels. For example, U.S. Pat. No. 2,989,156, issued to F. Brooks et al., discloses an insulation panel comprising an evacuated space between metal sheets, which evacuated space is filled with perlite powder. U.S. Pat. No. 3,151,365, issued to P. Glaser et al., shows the use of a mixture of fine carbon black particles and other fine particles filling an evacuated, enclosed structure, intermediate foil radiation shields, and an emissivity-reducing coating of silver. The H. Strong et al., patent, U.S. Pat. No. 3,179,549, uses a mat of very fine, oriented glass fibers sealed inside an evacuated, welded metal envelope. The vacuum used is only about 10^{-4} atmospheres (10^{-2} Torr), and it requires a fiber mat of sufficient density and thickness to be opaque to thermal infrared radiation. U.S. Pat. No. 4,444,821, issued to J. Young et al., also discloses an evacuated panel filled with a glass fiber mat with plastic edge seal strips and a gettering material positioned in the evacuated chamber. This panel also specifies only a low-grade vacuum of about 10^{-2} Torr. The N. Kobayashi patent, U.S. Pat. No. 4,486,482, also uses a glass fiber mat inside a vacuum envelope made of welded stainless steel sheets. This glass mat is stitched with glass fibers that run perpendicular to the plane of the mat and are supposed to support the external atmospheric pressure load on the panel walls to keep them from collapsing.

The above-described prior art vacuum panels are no doubt more effective than conventional foam and fiberglass insulation panels. However, constructing a truly effective and long-lasting insulation panel is not easy and is not achieved by these prior art structures to the extent necessary to meet the needs described above. For example, the low-grade vacuums used in the prior art patents cannot achieve insulation efficiencies high enough for use in ultra-thin panels. Plastic edge seals cannot maintain a vacuum over an extended period of time, and they really cannot withstand high-temperature exposure or solar radiation exposure without serious degradation and outgassing. Metal envelopes with welded seams will hold the required vacuum, but it is virtually impossible to achieve the perfectly leak-free

welds required for maintaining very high-grade vacuums over many years, when such welds have to be made in the presence of the billions of microscopically fine glass fibers and perlite particles used in prior art panels. A single particle or fiber intruding into the weld area could create a microscopic leak that would be very difficult to detect, but would never-the-less seriously compromise the lifetime of the vacuum inside the sealed insulation panel, thus compromising the usefulness of the panel.

The use of a vacuum results in the need for a sufficient structure inside the panel to hold the opposite panel walls from collapsing together. The glass fiber mats and perlite powders used in the prior art panels described above can serve that function. However, in high-order vacuums the inwardly directed sidewall pressures become very great so that such fiber mats and powders become more tightly compacted, thus offering more direct heat conduction paths through the insulation panel than desired. Also, to be really adaptable for a wide variety of uses, the insulation panel should be bendable around curves. However, bending the prior art panels would almost certainly crimp one wall sheet of the panel into the other, thereby forming a "cold short" where one wall or sheet touches the other. Even if the glass fiber mats of the prior art would physically hold the two opposite sheets apart, the mat itself would be so compressed at the crimp or bend that it would virtually form the cold short itself.

The laser-sealed vacuum insulating window invented by David K. Benson, one of the joint inventors of this invention, and C. Edwin Tracy, now U.S. Pat. No. 4,683,154, solved the problem of long-term sealing and structural support against collapse or cold short by laser-welding glass spacer beads between two glass sheets. However, that structure is quite thick, heavy, and fragile, being made with glass, and it is rigid, so it cannot be bent around curves. Therefore, while it is a highly efficient insulation panel, its utility is limited.

SUMMARY OF THE INVENTION

Accordingly, a general object of the present invention is to provide a highly effective, ultra-thin insulation panel.

Another object of the this invention is to provide a highly effective, ultra-thin insulation panel that is durable, resistant to degradation, e.g., by high temperatures, corrosive fluids, and sunlight, and that is long-lasting and bendable without damage or significant loss of insulating capability.

A more specific object of this invention is to provide a highly effective, ultra-thin insulation panel that has superior manufacturability, thus more consistent, dependable quality at a reasonable cost.

A more specific object of this invention is to provide a monolithic, yet very effective glass or ceramic spacer for use alone or in combination with additional similar glass or ceramic spacers in a high-grade evacuated chamber between two rigid, yet bendable metal sheets forming an insulation panel, which is easy to manufacture and use.

Another specific object of this invention is to provide a plurality of discrete glass or ceramic spacers between side sheets that form a vacuum chamber at predetermined spatial relationships to each other and a method of positioning such discrete spacers during assembly.

Additional objects, advantages, and novel features of the invention are set forth in part in the description that follows, and in part will become apparent to those skilled in the art upon examination of the following specification or may be learned by the practice of the invention. The objects and advantages of the invention may be realized and attained by means of the instrumentalities, combinations, and methods particularly pointed out in the appended claims.

To achieve the foregoing and other objects and in accordance with the purposes of the present invention, as embodied and broadly described herein, the article and apparatus of this invention may comprise two adjacent metal sheets spaced closely together with a plurality of spherical glass or ceramic beads or other discrete shapes optimally positioned between the sheets to provide mechanical support to maintain the spacing therebetween while minimizing thermal conductance and sealed with a metal weld around the edges. The glass beads or other shapes can, according to this invention, be formed in one or more monolithic sheets and positioned between the metal sheets. One preferred form of such monolithic sheets includes a sheet of glass web with a plurality of spherical nodules protruding in opposite directions from the web. Another preferred form includes a sheet of glass web with a plurality of elongated ribs protruding in opposite directions from each side. A plurality of such glass sheets can be laminated between the two outside metal sheets to further reduce linear heat conductance paths across the panel. A similar effect can be obtained by providing the two outside metal sheets textured with ribs or convex protrusions with the two outside sheets separated one from the other by a flat sheet of glass webbing. Other specific embodiments of the invention include the insulation panels configured in particular structures that enhance strength and flexibility, as well as useful configurations for particular purposes. Another structural embodiment includes a helical wound glass or ceramic spacer bead that can be used to separate two concentric, cylindrical metallic sheets in the shape of a tubular conduit or pipe.

Further, the method of this invention includes using polystyrene-coated beads positioned in a jig, contacting the beads with one outer metal sheet heated enough to melt the polystyrene to adhere the beads to the one outer sheet and lifting them out of the jig, clamping the beads between two outer metal sheets, heating to break down and outgas the polystyrene and evacuating to the range of 10^{-6} Torr (10^{-8} atmosphere), and sealing by welding the seams around the edges of the outer metal sheets. One or more low-emissivity surface coatings can be used to minimize thermal infrared radiation, and a reactive metal getter is installed in the vacuum insulation to help maintain the vacuum.

BRIEF DESCRIPTION OF THE DRAWINGS

The accompanying drawings, which are incorporated in and form a part of the specifications, illustrate the preferred embodiments of the present invention, and together with the description serve to explain the principles of the invention.

IN THE DRAWINGS

FIG. 1 is a perspective view of a segment of an insulation panel constructed according to the present invention with a portion of the edge seam and one side wall cut away to reveal the spacer beads positioned therein;

FIG. 2 is a cross-section of a preferred embodiment insulation panel according to the present invention;

FIG. 3 is a cross-section of a plurality of beads positioned in a jig prior to attachment of the beads to one of

the exterior metal sheets of an insulation panel according to this invention;

FIG. 4 is a cross-section of the assembly jig with the one outside sheet being attached to the beads on the jig;

FIG. 5 is a cross-sectional view of the jig similar to FIGS. 3 and 4, but with the beads attached to the outside sheet of the panel;

FIG. 6 is a cross-sectional view of an alternate embodiment of the insulation panel according to this invention with a plurality of smaller beads used as initial spacers for positioning the large beads;

FIG. 7 is a cross-sectional view of another embodiment of the present invention wherein the glass spacer beads are formed integrally with a monolithic spacer sheet;

FIG. 8 is a fragmented, exploded view of a panel assembly utilizing the monolithic spacer sheet of the embodiment FIG. 7;

FIG. 9 is a cross-sectional view of an embodiment similar to that shown in FIG. 7 and 8, but utilizing two of the monolithic spacer sheets;

FIG. 10 is a cross-sectional view of an insulation panel embodiment that has a monolithic glass spacer comprising a web with a plurality of nodules protruding from opposite sides with the nodules on one side of the web offset laterally from the nodules on the other side;

FIG. 11 is a perspective view of a portion of still another embodiment of the insulation panel according to the present invention with a portion of the edge seam and front panel and one of the monolithic spacer sheets cut away to reveal the complete structure, this embodiment of the monolithic spacer sheet having a plurality of elongated ribs, with the spacer sheets oriented so that the ribs of one spacer sheet run cross-wise to the ribs of the other;

FIG. 12 is a cross-sectional view of the insulation panel embodiment shown in FIG. 11;

FIG. 13 is a fragmentary, exploded view illustrating the assembly of the insulation panel embodiment of FIGS. 10 and 12;

FIG. 14 is a graph illustrating effective heat transfer in relation to vacuum in the panel;

FIG. 15 is a cross-sectional view of a composite insulation panel comprising of a plurality of the insulation panels described above imbedded in either a rigid or a flexible foam material;

FIG. 16 is a perspective view of a section of insulation panel according to this invention formed in a corrugated configuration;

FIG. 17 is a perspective view of a corrugated insulation section similar to that shown in FIG. 16, but further formed into a curved insulation panel;

FIG. 18 is a cross-sectional view of an insulation panel according to this invention formed into a cylinder with overlapping lateral edges;

FIG. 19 is a cross-sectional view of a composite insulation panel according to this invention formed as a rippled tube or conduit section that is longitudinally expandable and contractable;

FIG. 20 is a cross-sectional view of the composite rippled tube or conduit section of FIG. 19 shown formed around a bend;

FIG. 21 illustrates in cross section a composite rippled tube or conduit section similar to that shown in FIG. 19 used to connect together two immovable lengths of solid and unstretchable insulated pipes that may be formed according to embodiments of this invention;

FIG. 22 is a perspective view of a tubular insulated conduit according to this invention in which one or more helical glass spacers are used to hold apart two metallic tubular skin sections to form an insulated pipe or conduit;

FIG. 23 is a perspective view of an alternate embodiment of the insulation panel according to the present invention in which the glass spacer is a flat web and the two metallic outer sheets are textured with ribs running transverse to each other;

FIG. 24 is a perspective view of an alternate embodiment similar to that in FIG. 23, but wherein the metallic outer sheets have protruding nodules instead of ribs;

FIG. 25 is a cross-sectional view illustrating an application of the insulation panel of the present invention for isolating thermal pane windows from a metal frame structure as well as for insulating against heat transfer through solid structural members that support glazing or other building materials; and

FIG. 26 shows the insulated panel according to the present invention formed as a press-on cap to block heat transfer through a window frame or other structural unit.

DETAILED DESCRIPTION OF THE PREFERRED EMBODIMENTS

The ultra-thin insulation panel **10** embodiment according to this invention shown in FIG. **1** comprises of two outer sheets or walls **12, 14** positioned in closely spaced-apart relation to each other. The seams around the edges of the panel where the two outer sheets or walls **12, 14** meet are sealed, preferably by welding, as shown at **18**. The interior chamber **15** enclosed by the outer sheets or walls **12, 14** is evacuated to a high-grade vacuum in the range of at least 10^{-5} Torr, and preferably tot the range of 10^{-6} Torr. To hold this high-grade vacuum for many years, the edge seams **18** have to be sealed with almost perfectly leak-proof quality.

When the chamber **15** is evacuated as described above, the atmospheric pressure on the outsides of the wall sheets **12, 14** would normally collapse the wall sheets **12, 14** together, thereby causing a cold short or direct thermal conduction path from one wall to the other across the panel. To avoid such collapse, a plurality of discrete glass spacers, which can be in the form of spherical beads **16**, are positioned optimally to provide mechanical support to hold the two wall sheets **12, 14** apart, while minimizing thermal conductance. It is preferred that the metal wall sheets **12, 14** be formed of a low thermal conductivity metal such as stainless steel or titanium, both of which are easily weldable in a vacuum and are sufficiently hard or rigid so that they do not form around the spherical spacers, yet are bendable enough so the panel can be formed in curves. Therefore, a near "point" contact is maintained between each spherical glass bead spacer **16** and the metal wall sheets **12, 14**. For high-temperature applications, the beads **16** can be ceramic beads instead of glass, so that they maintain their structural integrity, spherical shape, and near "point" contact with the metal walls **12, 14**. Therefore, while this discussion, specification, and claims refer most often to the monolithic spacers as being glass, it is to be understood that ceramic spacer materials are also appropriate equivalents and are included within the scope of this invention.

Once the spacer beads **16** are properly positioned and the chamber **15** is evacuated, the atmospheric pressure on the outside surfaces of the wall sheets **12, 14** tightly

squeezes or clamps the sheets **12, 14** against the bead spacers **16**, thereby holding them in position. With proper spacing of the spacer beads **16**, the insulation panel **10** can even be bent or formed around a curve, as shown in FIG. **1**, and the spacer beads **16** maintain the spacing between the wall sheets **12, 14** in the bend without crimping or allowing a cold short between the two wall sheets **12, 14**.

While there may be a number of ways to affix the spacer beads **16** in optimum spaced relation to each other in the chamber **15**, one preferred method of doing so is illustrated in FIGS. **3** through **5**. Specifically, the spacer beads **16** are initially coated with a polystyrene or similar adhesive material. These polystyrene-coated beads **16** are then poured onto the surface of a bead jig **52**, which has a plurality of pockets **54** formed in its surface with the proper spacing as desired for holding the spacer beads **16**. One wall sheet **12** is heated and lowered into position on top of the spacer beads **16** as shown in FIG. **4**. The heat from the wall sheet **12** melts the polystyrene on the surface of the spacer beads **16** to adhere the beads **16** to the wall sheet **12** as shown at **20** in FIG. **4**. The wall sheet **12** is then allowed to cool, thereby allowing the polystyrene to cool and adhere the spacer beads **20** to the interior surface of the wall sheet **12**. Once adhered, the wall sheet **12** can be lifted off the jig **52**, as shown in FIG. **5**, with the beads **16** retained in proper position. Then, the other wall sheet **14** can be joined as shown in FIG. **2**. With the two wall sheets **12, 14** clamped together and with the beads **16** in proper position, the assembly is then heated to a sufficient temperature to break down the polystyrene into more volatile styrene monomers, which vaporize at such temperatures. The temperature should not be so high as to break down the polystyrene into its carbon elements, because the carbon is higher in conductivity, and it has a higher infrared emissivity than desired. Under those temperature conditions, the chamber **15** can be evacuated, and, while held under the vacuum, the edges **18** can be welded to seal the vacuum in the chamber **15**.

As mentioned above, other methods may also be used to secure the beads in place while the clamping evacuation and weld sealing operations take place. For example, with ceramic beads **16** and titanium sheets **12, 14**, the beads **16** may be positioned and maintained with proper spacing electrostatically. Also, the beads may be held in proper position by a metal mesh until the outer wall sheets **12, 14** clamp them in place, or they may be strung on wires or glass fibers.

The embodiment **40** shown in FIG. **6** is similar to that shown in FIGS. **1** and **2** above, with the exception that the large spacer beads **16** are positioned on the bottom wall sheet **14** and held in proper spacing by a plurality of smaller diameter beads **42**. Again, once the top sheet **12** is clamped in position, the chamber **15** evacuated, and edges **18** welded shut, the spacer beads **16** will be held in position by the atmospheric pressure on the outside of the panel.

Another embodiment **60**, as shown in FIG. **7**, has the spacer beads **64** formed as an integral part of a monolithic spacer sheet **62**. This monolithic spacer sheet **62**, which is also illustrated in FIG. **8**, is one unitary sheet of glass web **66** with a plurality of spherical nodules **64** extending outwardly in both directions from the web **66**. This monolithic spacer sheet **62** can merely be positioned on the bottom wall sheet **14**, and then the top wall sheet **12** can be placed in position. Once the chamber **15** is evacuated and the edges **18** sealed, the spacer nodules or spheres **64** will be clamped into position by the atmospheric pressure. Therefore, it will not make any difference if the webbing breaks after the panel has been assembled. Consequently, after assembly, if it is desired to bend the panel **60** around a curve, which would break the glass web **66**, the insulating quality and structural integrity and spacing between walls **12, 14** of the panel **60** itself will be maintained by the nodules **64**.

The embodiment **68** shown in FIG. **9** is similar to that shown in FIGS. **7** and **8**, with the exception that two of the monolithic spacer sheets **62** are utilized. The spacer sheets are positioned such that the nodules **64** of one sheet **62** touch one outside wall sheet **12** and one side of the web **66** of the adjacent panel on the other side. This embodiment defines a more tortuous path through a series of "point" contacts in which heat must be conducted to make it from one side of the panel **68** to the other, thus further increasing the thermal efficiency thereof.

A similar effect of not having any straight heat conducting paths transversely through the insulation panel is incorporated in yet another embodiment **55** as shown in FIG. **10**. A single spacer sheet **62** is used, but hemispherically-shaped nodules **57** are spaced so that no nodule **57** touching outside wall sheet **12** is directly opposite a nodule **57** that touches inside wall sheet **14**. Once again a tortuous path through a series of "point" contacts, that is, from wall **12** to a nodule **57**, through web **66** of sheet **62** to another nodule **57**, then to wall **14**, is provided. With chamber **15** between walls **12, 14** highly evacuated, this tortuous path once again provides high thermal efficiency.

Another highly effective insulation panel embodiment **70** according to this invention is shown in FIGS. **11** through **13**. In this embodiment **70**, two monolithic spacer sheets **72, 73** are used, each of which has a plurality of elongated ribs **75, 74** separated by webs **77, 76**, respectively. These monolithic spacer panels **72, 73** are positioned next to each other so that the ribs **74** of sheet **72** run perpendicular to the ribs **75** of sheet **73**. In this manner, the ribs **74** of sheet **72** have line contacts with outer wall sheet **12**. Likewise, the ribs **75** of sheet **75** have line contacts with the other outer wall sheet **14**. Such line contacts do make it somewhat more difficult for heat to flow by conduction. Further, the contacts between the ribs **74** on sheet **72** and ribs **75** on sheet **73** are essentially "point" contacts, thus almost negligible heat conductors.

For even higher insulation effectiveness, a plurality of smaller panels made as described above, such as any of the embodiments **10, 40, 60, 68, 70**, can be stacked or laminated together. For example, as shown in FIG. **15**, a plurality of panels **10** are stacked or laminated together in a composite panel **80** by embedding them in, or adhering them to, a more conventional insulation material **82**, such as either rigid or flexible foam insulation or even a consolidated powder insulation material. The panels **10** are preferably staggered with a layer of the conventional material **82** positioned between each panel **10**. This arrangement requires any heat that traverses the conventional insulation material **82** in the composite panel **80** shown in FIG. **15** to travel a tortuous path as indicated by the arrow **94**. An R50 or greater insulation value can be provided with a composite panel **80** only one inch thick. Composite panels **80** built with this structure can be easily formed around curves or used in any shape desired.

A number of means are available for increasing the strength and utility of panels that are fabricated with the principles of embodiment **10** as shown in FIG. **2**. FIGS. **16**, **17**, **18**, **19**, and **20** illustrate some of these means.

An embodiment **85** in FIG. **16** is based on the principles of embodiment **10** and provides for corrugations in a direction parallel to the X-axis, as illustrated in FIG. **16**. Spherical nodules **16** or other glass spacers as described above separate walls **12** and **14**, and chamber **15** is highly evacuated. Welded seal **18** maintains the vacuum. The corrugations keep the panel **85** rigid in one direction while permitting it to bend in another direction, as shown in FIG. **17**. According to FIG. **16**, if embodiment **85** is generally oriented with the plane formed by the X-Y axes, then the embodiment is rigid with respect to movement in the X to +Z or X to −Z directions; and flexible with respect to movement in the Y to +Z and Y to −Z directions.

An embodiment **87** according to FIG. **18** is also constructed in accordance with the general principles of embodiment **10** of FIG. **2** or of other insulated panel embodiments as described above. However, in embodiment **87**, the insulated panel is bent into a cylinder or other enclosing configuration in which walls **12**, **14** overlap at ends **88**, **89**, thereby reducing thermal energy loss through welded seams **18**. Such ability to bend the panel and overlap ends provides a thermally efficient means of joining of ends **88**, **89** of embodiment **87** for such uses as wrapping hot water heaters and other vessels that need to be insulated.

An insulation panel according to the present invention can also be formed in a rippled tube or conduit embodiment **125**, as shown in cross-section in FIG. **19**. The ripples or accordion folds **126** allow this tube or conduit **125** to be curved or bent, as illustrated in FIG. **20**, or longitudinally expanded or contracted, such as to join two immovable rigid conduits **110**, as shown in FIG. **21**.

A less flexible insulated tube or pipe embodiment **110** shown in FIG. **22** has smooth interior and exterior walls **12**, **14**. Wall **12** forms the outer surface of the insulated pipe, while wall **14** forms the inner conduit **113**. Separation between walls **12**, **14**, forming evacuated space **15**, is shown in FIG. **22** maintained by helical glass or ceramic spirals **111**, **112**, although other aggregate or monolithic spacer embodiments as described above can also be used to maintain the vacuum space. A very high thermal insulation efficiency in thin-wall tubes or pipes can be provided for fluids or gasses, including cryogenics, flowing or contained within conduit **113** with this pipe embodiment **110**. The ends of lengths of these insulated pipes **110** can be joined together or to conventional pipes by the rippled connector **125**, as described above. When the ends **126**, **127** of connector **125** overlap the ends of pipe **110**, as shown in FIG. **21**, insulation effectiveness is maintained at these joints, even if they are welded.

Embodiment **115** according to FIG. **23** comprises two corrugated walls, **12**, **14**, having elongated ribs or protrusions **122** forming valleys **118** and peaks **119**, and a monolithic glass spacer **120**, placed between walls **12**, **14**. Walls **12**, **14** are joined by welded seam **18**. Wall **12** is oriented so that its ribs **122** form right angles to the ribs of wall **14**. Spacer **120** separates the valleys **118** of wall **12** and wall **14**. The right-angle orientation of the ribs **122** of the respective walls **12**, **14** forms essentially very small dimensional (almost point) direct transverse contacts or heat transfer paths through the glass spacer **120** where the valleys **118** of the respective walls **12**, **14** cross each other. In this sense, this embodiment is effectively a structural inverse of the embodiment **70** of FIGS. **11–13** and described above. The chamber **121** formed under peaks **119** of walls **12**, **14** is evacuated. Such an arrangement provides an insulation panel structure that is very rigid and possesses great strength in relation to its weight, while also providing a high degree of thermal insulation.

Embodiment **130** according to FIG. **25** is similar in concept to embodiment **55** of FIG. **10**, except that hemispherical nodules **133** are formed on walls **12**, **14** of embodiment **130**. Spacer **134** is a flat plate of monolithic glass or ceramic. Welded seam **18** provides a seal to maintain the vacuum of evacuated chamber **15**. Therefore, the panel **130** is generally the structural inverse of panel **55** and provides similar advantages and insulation effectiveness.

Still another embodiment **140** is shown in FIG. **26**. Embodiment **140** may be used for thermal-break construction of structural windows. For example, an I-beam or C-channel **141** may provide the basic structural member. Surrounding beam **141** and conforming to its shape are two insulated panel structures **142**, **242**, for example, constructed similar to that shown in embodiment **10** of FIG. **2** or according to any of the other suitable panel structures described above. Thermal break spaces **143**, **243** separate structures **142**, **242**. Cushion pieces **144**, **244** fit snugly against structures **142**, providing a seal and providing for differential expansion of glass panes **145**, **147**, **148**. Glass pane **145** is illustrated as an evacuated, fused thermal pane window. Such a typical window can also be composed of a plurality of glass panes **147**, **148** edge-sealed by a sealing structure **146**, which may be plastic, metal, or any other suitable material. Compressible seals **149**, **249** assist in preventing air or water leakage. Embodiment **140** thus provides a strong window structure with a frame structure having highly efficient thermal break properties because of very long thermal conductance paths.

FIG. **26** illustrates a variation of the insulated window mounting structure of FIG. **25**, wherein thermal pane windows **145** are retained in an I-beam structure **241** by rubber seals **344**, **444** between the windows **145** and the flanges **451** and **452**. The insulation panels **342**, **442** of this embodiment are formed into C-shaped cross-sections that mount onto and cover the exposed surfaces of the respective flanges **451**, **452**. Each insulation panel **342**, **442** can be only 0.1 inch (2.5 mm) thick, yet can have an R15 insulation value. Therefore, both panels **451**, **452** together can provide very neat appearing—almost imperceptible—R30 insulation on window frames **141** and other similar structures that otherwise are virtually cold shorts across building windows.

The beads **16**, spirals **101**, or monolithic sheets **62**, **72**, **73**, **120**, **134** are preferably fabricated of glass for applications where temperatures are less than 400° C. for a number of reasons, the most important of which is the very low outgassing characteristic of glass. Glass also has a high compressive strength, mechanical rigidity, low thermal conductivity, and low cost, and it is easy to use in fabrication. Also, glass is essentially opaque to thermal infrared radiation, which, of course, minimizes radiation heat transfer across insulation panels **10**, **100**, **115**, **130**, particularly where the monolithic spacer sheets **62**, **72**, **73**, **120**, **134** are used. In applications where temperatures exceed 400° C., the beads **16**, spirals

101 or monolithic sheets 62, 72, 73, 120, 134 can be fabricated with a ceramic material.

Optical rejection of heat can also be enhanced by including low-emissivity coatings 17, 19 of copper, silver, or other low-emissivity material, preferably on the interior surfaces of wall sheets 12, 14, 131, 132. Such low-emissivity materials can also be coated on the surfaces of the monolithic spacer sheets themselves, particularly where it is not anticipated that the web 66, 76, 77 or spacers 120, 134 will be broken in a particular application. A metal getter 21, illustrated in FIG. 2, can also be placed in the chamber 15 of any of the panel insulation embodiments described above (although not illustrated in all the figures) prior to evacuating and sealing the chamber 15. The metal getter traps any small amount of reactive gas desorbed from glass beads or metal walls that may occur during the lifetime of many years duration.

The magnitude of the vacuum and its coordination with the width of the vacuum chamber 15 in all the embodiments described above are important. Low-grade vacuums in the range of 10^{-7} atmospheres (10^{-4} Torr) are inadequate to contribute much to the thermal transfer resistance or insulating quality of a panel. The flat line 90 in the graph in FIG. 14 illustrates the point that a vacuum does not contribute to any decrease in the rate of thermal transfer across the panel at all until enough of the air (or other gases) has been withdrawn to the extent that the mean free path of a molecule between collisions with other molecules is equal to the spacing or distance between the hot and cold surface. For ultra-thin, high-grade insulation panels as contemplated by this invention, at a vacuum of about 10^{-4} Torr, the mean free path is equal to the distance between the two wall surfaces, as indicated by the bend 92 of the graph in FIG. 14. At that point, thermal conductivity of the panel 10 decreases, i.e., insulating effectiveness increases, on a fairly linear basis in direct relation to a decrease in gas pressure in chamber 15, as indicated by line 94 in FIG. 14. Then, at about 10^{-6} Torr, a further decrease in pressure does not significantly decrease thermal transfer, because almost all the thermal transfer in that range, indicated by line 96 in FIG. 14, is due to radiation. Therefore, in order to not only take advantage of a vacuum but also maximize the beneficial use of a vacuum in this kind of insulation application, it is necessary to maintain a high-grade vacuum with a pressure in the range of 10^{-6} Torr or lower.

For purposes of illustration, the ultra-thin insulation panels according to this invention can be fabricated very effectively and used very beneficially in overall thickness in the range of about 0.1 inch (2.5 mm). The metal wall sheets can be 0.005 to 0.010 inch (0.2 to 0.3 mm) thick, and the spacers can be about 0.08 inch (2 mm). The monolithic glass inserts 62, 72, 73 can be thin, rolled glass sheets with regularly spaced spherical nodules 64 or ribs 74, 75. Gas-phase conduction is nearly eliminated by sealing the chamber 15 under a high-grade vacuum with a pressure of only 10^{-5} Torr and preferably 10^{-6} Torr or less, as illustrated by FIG. 14 and discussed above. Solid-phase conduction is minimized by the use of low thermal conductivity material, such as glass, for mechanical side wall supports or spacers and by the use of nearly "point" contacts between the supports and the wall sheets, as described above in relation to the specific structures and embodiments illustrated. A 0.1-inch (2.5 mm) thick insulation panel, as described above, can have an insulation value as high as R15 , i.e., R=15° F. - hr. ft^2/BTU, which resists thermal transfer as well as a 2½-inch thick section of polymer foam or nearly seven inches of standard-density fiberglass.

By way of illustration, and not of limitation, the following is provided to illustrate the advantages of the ultra-thin Compact Vacuum Insulation (CVI) embodiments of the present invention due to such items as its compactness, effective working temperatures, light weight, and reduction in the use of chlorofluorocarbons (CFC).

In many applications a premium is paid for volume, and a high-performance insulation material occupying less volume is therefore more valuable. An indicator of these applications is provided by the growing substitution of more-expensive expanded foam products with R-values of 5 to 10 per inch, or other exotic insulations, for less-expensive bulk insulations such as fiberglass, rockwool and cellulose, with R-values of 2 to 4 per inch. Such applications include: refrigerators; freezers; display case shells for chilled products such as meat, produce, flower, and liquor; refrigerated intermodal transport containers; and refrigerated trucks and trailers, tank, and rail cars; steam and hot and cold water piping; district heating and cooling piping; industrial process hot and cold storage tanks or containers; industrial hot and cold process equipment; automobile, train, plane and ship body shells; building HVAC equipment and ducts; roofs, walls, and floors of buildings; chilled computer circuits and components; diurnal and annual cycle storage tanks; portable hot and cold storage and transport containers; thermal isolation of heat-producing producing computer components and other operations; and temperature maintenance of high temperature processes such as sodium-sulfur batteries and heat-retention diesels.

The ultra-thin CVI insulation panels and conduits according to this invention as described above are just as effective in cryogenic process, transport, and storage situations as the thicker, more complex, state-of-the-art cryopumped insulation, where a layered multifoil insulation is continuously vacuum-pumped by thermal absorption by the extremely cold material itself. However, since the ultra-thin CVI insulation panels and conduits of the present invention do not rely on such cryopumping to maintain their insulation effectiveness, they do not require such energy input or waste. In further contrast, this insulation according to the present invention is also just as effective in ambient and high-temperature applications as it is in low-temperature applications, whereas cryopumped insulation works only at extremely low temperatures, and the ultra-thin CVI of the present invention is much less bulky and more flexible than cryopumped insulation.

Related to this cryogenic application is the case of high-temperature superconductors. As long as superconductivity took place only at cryogenic temperatures, transmission of electricity was through circuits that cryo-pumped their multifoil insulating jackets. Such energy drain due to cryopumping the insulation could be substantial when cryopumping great lengths of superconductor circuit. Such energy drain could be avoided with the ultra-thin

CVI insulation of the present invention, as discussed above. Equally as important, however, is the current on-going development of superconductors that operate above cryogenic temperatures, yet still need effective insulation. Since cryopumping does not occur at higher

temperatures, the ultra-thin CVI insulation of this invention may be the only currently available practical alternative.

Benefits of the relatively lighter weight of the embodiments of the present invention over prior art insulating materials and techniques include: lighter-weight, less-expensive machinery is required for fabrication and handling; lighter-weight fasteners are required for attachment to other structures; lighter-weight structures are required to hold the present invention; and less fuel and effort is required to transport the embodiments, fasteners, and accompanying structure, if any, to which it is attached or upon which it rests.

By way of further example, existing and prospective insulation products are compared to an embodiment of the present (CVI) invention in the following table:

APPROXIMATE VALUES FOR PROTOTYPICAL 17 CUBIC FOOT REFRIGERATOR/FREEZER

Type of Insulation (R per inch)	lbs/ft^3	lbs/R15/ft^2	Weight (lb) of R15 Insulation	Volume (ft^3) of R15 Insulation
Loose-fill fiberglass (R3)	2	0.83	35.3	17.50
Polyurethane foam (R7)	2	0.35	14.9	7.70
Perlite powder (in atm. R2.5)	14	7.00	297.5	21.30
Optimized mixed powder (at 0.1 mm Hg, R20)	15	0.97	41.2	21.30
CVI (at 10^{-6} torr)	N/A	0.60	24.0	0.35

Another advantage of the advanced insulation according to this invention is provided by the growing body of evidence that a chemical constituent of the best low-cost insulations currently available, i.e., the expanded polymer foams, is damaging the earth's protective ozone layer. The (CFC) used to "Blow" (or expand) the foam escapes from the foam over time, gradually rising to the stratosphere where, over a 50-year life, it acts as a catalyst in the destruction of 50,000 times its weight of ozone.

Besides the present invention being a direct substitute in many applications for CRC-blown insulating foams, its other attributes of light weight, compactness, nonflammability, non-toxicity, low-cost, etc., make it beneficial to increase the R-values presently utilized in appliances and other applications, as well as those now being proposed. In the many cases where the thermal envelope is enclosing spaces of products chilled by standard vapor-compression equipment with CFC working fluid, or refrigerant, the present invention allows for a downsizing of the vapor compression equipment, and a resulting reduction in the amount of CFC refrigerant, as well as energy, needed to achieve and maintain the desired cool or chilled temperatures in the enclosed spaces. With the reduction o in compression equipment combined with replacement of CFCS-emitting materials with CVI as insulation, refrigeration equipment and other CFC insulation methods can be eliminated as a major source of CFC pollution.

A further advantage of the embodiments of this invention having corrugated designs is to enhance the ability to bend the CVI in the direction normal to the direction of the corrugated ribs as shown in FIGS. **16** and **17** and described above. This corrugated configuration allows easy forming of the insulation panel around cylindrical tanks. The corrugation also reduces contact with a rigid, non-corrugated exterior or interior surface to essentially a number of line contacts, which further thermally isolates the object being insulated. In the case of insulated piping or ducting, such corrugated insulation panels will allow bending of the piping or ducting while maintaining a very strong "hoop strength" design against collapse.

Another application for the ultra-thin compact vacuum insulation is related to the recent improvements in glazings. From an R-value of about 1 for single glazing, and about 2 for standard double glazing, designs and prototypes have appeared within the last 5 years for advanced glazings with R-values of 3 to 10. One result of these advances is that more attention has been focused on the window frame itself, which can account for as much as 30% of the total fenestration "rough opening" in a building envelope, yet is often essentially a cold short between the interior and the exterior of the building. Wood and vinyl-clad wood frames are modest improvements, with maximum total R-values approaching 5. However, considering the effect of the window frames on R-value integrated over the entire fenestration area, much more improvement would be beneficial. The ultra-thin compact vacuum insulation panel window frame coverings or caps **142**, **242** shown in FIG. **25** and **342**, **442** shown in FIG. **26** and described above can achieve R30 insulation values when installed on both the interior and exterior sides of the window frame, and R15 when installed on only one side with as little as 0.1 inch (2.5 mm) panel thickness.

The table below compares the effects of frames of different R-values on the integrated R-value of the fenestration opening.

Integrated R-values for 10 ft^2 Window

Glazing R-Value (70% Coverage)	Frame R-value (30% Coverage) 1	2	4	8	16	32
1	1.0	1.2	1.3	1.4	1.4	1.4
2	1.5	2.0	2.4	2.6	2.7	2.8
4	2.1	3.1	4.0	4.7	5.2	5.4
8	2.6	4.3	6.3	8.0	9.7	10.6
16	2.9	5.2	8.5	12.5	16.0	19.6

The foregoing description is considered as illustrative only of the principles of the invention. Further, since numerous modifications and changes will readily occur to those skilled in the art, it is not desired to limit the invention to the exact construction and processes shown as described above. Accordingly, all suitable modifications and equivalents may be resorted to falling within the scope of the invention as defined by the claims which follow.

The embodiments of the invention in which an exclusive property of privilege is claimed are defined as follows:

1. Thermal insulating apparatus, comprising:

a plurality of thermal insulating panels, each of which has two closely spaced-apart metallic wall panels with spacers therebetween bridging the two wall panels, such spacers being shaped such that thermal conduction through the spacer sheets must be through near "point" contacts of solid materials, the edges of said wall panels being welded together to form a chamber therebetween, and said chamber being evacuated to a high-grade vacuum having a pressure at least as low as 10^{-5} Torr;

a large, conventional-type insulation substrate having said thermal insulating panels attached thereto in at least two layers in such a manner that a layer of foam-type insulating intercedes between the layers of thermal insulating panels as well as between adjacent ones of said thermal insulating panels in each layer, and wherein said insulating panels in one of said layers are staggered with respect to the insulating panels in adjacent ones of said layers such that heat conducted through said substrate must travel in a tortuous path through the foam-type insulation between adjacent layers and between said insulating panels in said layers.

2. Composite thermal insulation, comprising:

a first plurality of thin, evacuated insulation panels with peripheral edges positioned in adjacent, but spaced-apart relation to, each other in a substantially common first planar alignment with a spaced distance between respective peripheral edges of adjacent ones of said evacuated panels in said first planar alignment;

a second plurality of thin, evacuated insulation panels with peripheral edges positioned in adjacent, but spaced-apart relation to, each other in a substantially common second planar alignment with a spaced distance between respective peripheral edges of adjacent ones of said evacuated panels in said second planar alignment, said second planar alignment being positioned adjacent, but in substantially parallel, spaced-apart relation to, said first parallel alignment such that there is a spaced distance between said first and second planar alignments, and the panels in said first planar alignment being staggered with respect to the panels in said second planar alignment such that at least one of said panels intersects any line that is perpendicular to said first and second planar alignments; and

a mass of different thermal insulation material substantially filling said spaced distances between said respective peripheral edges as well as substantially filling said spaced distance between said first and second planar alignments.

3. The composite thermal insulation of claim 2, wherein said different insulation material is a foam insulation material.

4. The composite thermal insulation of claim 2, wherein said different insulation material is a powder insulation material.

* * * * *