August 1995 • NREL/TP-431-8143

Technical and Economic Assessment of Producing Hydrogen by Reforming Syngas from the Battelle Indirectly Heated Biomass Gasifier

Margaret K. Mann

National Renewable Energy Laboratory
1617 Cole Boulevard
Golden, Colorado 80401-3393
A national laboratory of the U.S. Department of Energy
Managed by Midwest Research Institute
for the U.S. Department of Energy
under contract No. DE-AC36-83CH10093

NREL/TP-431-8143 • UC Category: 1630 • DE95009275

Technical and Economic Assessment of Producing Hydrogen by Reforming Syngas from the Battelle Indirectly Heated Biomass Gasifier

Margaret K. Mann
Industrial Technologies Division
National Renewable Energy Laboratory
Hydrogen Program Milestone Completion Report

Program Manager: Catherine Gregoire Padró

National Renewable Energy Laboratory
1617 Cole Boulevard
Golden, Colorado 80401-3393
A national laboratory of the U.S. Department of Energy
Managed by Midwest Research Institute
for the U.S. Department of Energy
under contract No. DE-AC36-83CH10093

August 1995

NOTICE

This report was prepared as an account of work sponsored by an agency of the United States government. Neither the United States government nor any agency thereof, nor any of their employees, makes any warranty, express or implied, or assumes any legal liability or responsibility for the accuracy, completeness, or usefulness of any information, apparatus, product, or process disclosed, or represents that its use would not infringe privately owned rights. Reference herein to any specific commercial product, process, or service by trade name, trademark, manufacturer, or otherwise does not necessarily constitute or imply its endorsement, recommendation, or favoring by the United States government or any agency thereof. The views and opinions of authors expressed herein do not necessarily state or reflect those of the United States government or any agency thereof.

Available to DOE and DOE contractors from:
Office of Scientific and Technical Information (OSTI)
P.O. Box 62
Oak Ridge, TN 37831
Prices available by calling 423-576-8401

Available to the public from:
National Technical Information Service (NTIS)
U.S. Department of Commerce
5285 Port Royal Road
Springfield, VA 22161
703-605-6000 or 800-553-6847
or
DOE Information Bridge
http://www.doe.gov/bridge/home.html

Printed on paper containing at least 50% wastepaper, including 10% postconsumer waste

Executive Summary

The technical and economic feasibility of producing hydrogen from biomass by means of indirectly heated gasification and steam reforming was studied. A detailed process model was developed in ASPEN Plus™ to perform material and energy balances. The results of this simulation were used to size and cost major pieces of equipment from which the determination of the necessary selling price of hydrogen was made. A sensitivity analysis was conducted on the process to study hydrogen price as a function of biomass feedstock cost and hydrogen production efficiency.

The gasification system used for this study was the Battelle Columbus Laboratory (BCL) indirectly heated gasifier. The heat necessary for the endothermic gasification reactions is supplied by circulating sand from a char combustor to the gasification vessel. Hydrogen production was accomplished by steam reforming the product synthesis gas (syngas) in a process based on that used for natural gas reforming. Three process configurations were studied. Scheme 1 is the full reforming process, with a primary reformer similar to a process furnace, followed by a high temperature shift reactor and a low temperature shift reactor. Scheme 2 uses only the primary reformer, and Scheme 3 uses the primary reformer and the high temperature shift reactor. A pressure swing adsorption (PSA) system is used in all three schemes to produce a hydrogen product pure enough to be used in fuel cells. Steam is produced through detailed heat integration and is intended to be sold as a by-product.

Three plant sizes, 27 T/day (30 t/day), 272 T/day (300 t/day), and 907 T/day (1000 t/day) were studied. In Scheme 1, the small plant produces approximately 21,594 standard m^3/day (762,580 scfd) hydrogen, which approximates the fuel requirement of 500 vehicles per day with a fuel economy corresponding to 60 miles per gallon of gasoline (Ogden, 1995). The medium-size plant was chosen for study because it is ten times larger. The large plant corresponds to a plant using half the maximum amount of biomass that has historically been considered to be economically and logistically feasible from a dedicated feedstock supply system (DFSS). The two smaller plants would most likely be able to use waste biomass at a cheaper price than that from a DFSS. When examples of costs are given in this report, biomass is assumed to cost $46.30/T and $15/T from DFSS and waste sources, respectively. The cost of biomass from either waste sources or a DFSS will vary depending on the location and crop type, as well as market influences once biomass energy systems are developed. The Department of Energy goal for biomass from a DFSS is $37.50/T ($34/t = $2/MMBtu) to $46.30/T ($42/t = $2.50/MMBtu).

The steam reforming process studied is very similar to that used to reform natural gas. All necessary unit operations are commercially available, and should require no special engineering design. The estimated capital costs of the entire gasification and reforming plant for the most profitable scenario studied (Scheme 1) are $6.1 million for the 27 T per day (30 t/day) plant, $34.5 million for the 272 T/day (300 t/day) plant, and $90.4 million for the 907 T/day (1000 t/day) plant.

The economics of producing hydrogen from this process are moderately favorable for many of the scenarios tested. The most economically feasible design is that tested in Scheme 1. The necessary selling price for hydrogen produced by steam reforming BCL biomass syngas falls within the current market values ($5 - $15/GJ) for many of the cost scenarios studied. However, the results are mostly on the high end of this range for reasonable biomass feedstock costs. Of the three plant sizes studied, the most economic configuration depends upon the availability of waste biomass at a lower price than biomass from a DFSS. If waste biomass can be obtained for the medium size plant, this scale with a Scheme 1 design yields the lowest hydrogen price. If the medium size plant must use biomass from a DFSS, the large plant with a Scheme 1 design is the most economic.

Results show that the small scale plant using any of the process schemes studied does not produce hydrogen cheaper than the medium size plant. However, if the small plant is the only size for which cheaper waste biomass can be obtained, local refueling stations, similar to existing gasoline stations, might be feasible.

The hydrogen production cost from the large plant obtaining biomass from a DFSS at $46.30/T ($42/t), is $6.50/GJ ($6.90/MMBtu) without taxes. With a 37% tax rate and a 15% after-tax internal rate of return (IRR), the necessary hydrogen selling price is $13.70/GJ ($14.30/MMBtu). The hydrogen production cost for the 272 T/day plant is $4.10/GJ using biomass waste at $16.50/T ($15/t). The corresponding hydrogen selling price is $13.10/GJ ($13.80/MMBtu). If the feedstock for the medium size plant must be obtained from a DFSS, the production cost and necessary selling price increases to $7.20/GJ ($7.60/MMBtu) and $16.20/GJ ($17.1/MMBtu), respectively. Hydrogen produced in the small plant using waste biomass will cost $7.20/GJ ($7.60/MMBtu), and sell for $23.20/GJ ($24.50/MMBtu). A lower specified IRR would decrease the required selling price in each case and the estimates of what biomass from waste and DFSS sources will cost are likely to vary from the examples given here. Hydrogen produced in process Schemes 2 and 3 is more expensive than that produced in Scheme 1 because of the decrease in production.

The discount rate for which the net present value of the project equals zero was calculated for each scenario studied. This rate is set such that the cumulative net earnings from the project exactly balance the initial investment in the process. Using Scheme 1, the discount rate for the large plant using biomass from a DFSS is 9.2%. The rate for the medium plant using biomass from a DFSS is 6.7%; using biomass waste, this rate increases to 10.4%. The rate for the small plant, even with the cheaper biomass waste feedstock, is 4.0%.

The break-even points for the large, medium, and small plants are 13.3 years, 6.3 years, and 7.2 years, respectively. These calculations were made using DFSS biomass for the large plant and waste biomass for the medium and small plants. If the medium plant must use biomass from a DFSS, the break-even point is extended to 9.5 years.

Table of Contents

Abbreviations and Acronyms 1

Metric Units of Measurement 1

1.0 Introduction 2

2.0 Process Description 2
- 2.1 Gasification Using the BCL Indirectly Heated Gasifier 3
- 2.2 Steam Reforming to Produce Hydrogen 5
- 2.3 Steam Generation 8

3.0 Conversion Efficiency 8
- 3.1 Stoichiometric Maximum Efficiency Calculation 8

4.0 Economic Analysis 10
- 4.1 Economic Assumptions 11
- 4.2 By-Product Credit: Steam 11
- 4.3 Equipment Sizing and Costing 12
  - 4.3.1 Gasification Costs 12
  - 4.3.2 Reactor Costs 12
  - 4.3.3 Compressor Costs 13
  - 4.3.4 Heat Exchanger Costs 13
  - 4.3.5 Pump Costs 13
  - 4.3.6 PSA Cost 13
  - 4.3.7 Operating Costs 13
- 4.4 Economic Analysis Results 13

5.0 Conclusions 26

6.0 Future Work 26

References and Pertinent Literature 28

List of Tables

Table 1: Elemental Analysis of Biomass and Char 3
Table 2: Syngas Composition After Cleanup 5
Table 3: Summary of Unit Operations Used in Different Process Configurations 7
Table 4: Hydrogen Produced in Each Scenario Analyzed (standard m^3/day) 8
Table 5: Process Conversion Efficiencies 10
Table 6: Economic Assumptions 11
Table 7: By-Product Steam Generated 12
Table 8: Capital (MM$) and Operating Costs (MM$/year) 14
Table 9: Necessary Hydrogen Selling Price for a 15% after-tax IRR After Taxes 21
Table 10: Discount Rate Obtained from Return on Investment Analysis 22

List of Figures

Figure 1: The Battelle Indirectly Heated Gasification System 4
Figure 2: Reforming Process 6
Figure 3: ASPEN Plus™ Process Flow Diagram 9
Figure 4: Production Cost of Hydrogen, Scheme 1, Pre-tax 15
Figure 5: Selling Price of Hydrogen, Scheme 1, After-tax, 15% IRR 16
Figure 6: Production Cost of Hydrogen, Scheme 2, Pre-tax 17
Figure 7: Selling Price of Hydrogen, Scheme 2, After-tax, 15% IRR 18
Figure 8: Production Cost of Hydrogen, Scheme 3, Pre-tax 19
Figure 9: Selling Price of Hydrogen, Scheme 3, After-tax, 15% IRR 20
Figure 10: Cumulative Cash Flow for a 27 T/day Facility 23
Figure 11: Cumulative Cash Flow for a 272 T/day Facility 24
Figure 12: Cumulative Cash Flow for a 907 T/day Facility 25

Abbreviations and Acronyms

BCL - Battelle Columbus Laboratories
CO - Carbon monoxide
CO_2 - Carbon dioxide
DCFROR - Discounted Cash Flow Rate of Return
DFSS - Dedicated Feedstock Supply System
GJ - Gigajoule
H_2 - Hydrogen
IRR - Internal Rate of Return
kPa - Kilopascal
MMBtu - Million British Thermal Units
PSA - Pressure Swing Adsorption
ROI - Return on Investment
SCFD - Standard Cubic Feet per Day
t - ton
T- Metric tonne

Metric Units of Measurement

In accord with recommendations from the Department of Energy, all results from this study are reported in metric units. Occasionally, the English system equivalent is stated in parenthesis. Below are the metric units used in this report with the corresponding conversions to English units.

Mass:	kilogram (kg) = 2.20462 pounds
	metric tonne (T) = 1.10231 ton
Volume:	cubic meter (m^3) = 264.17 gallons
Pressure:	kilopascals (kPa) = 0.145 pounds per square inch
Energy:	gigajoule (GJ) = 0.9488 MMBtu
Temperature:	°C = (°F - 32)/1.8

1.0 Introduction

The technical and economic feasibility of producing hydrogen by reforming syngas from the Battelle Columbus Laboratory (BCL) indirectly heated gasifier was studied. From experimental work conducted at BCL on the gasifier and commercial information on the reforming operation, a process plant was designed using the ASPEN Plus™ simulation software. The material and energy balances obtained were used to size and cost major pieces of equipment, from which a capital cost estimation was made. Using discounted cash flow rate of return (DCFROR) and return on investment (ROI) analyses, the economic position of this biomass-derived process relative to conventional hydrogen production processes was assessed.

Hydrogen has the potential to deliver significant economic and environmental benefits. Hydrogen is a very clean burning fuel; in internal combustion engines, water and a very small amount of NO_x are the only products. When used in a fuel cell to produce electricity, water is the sole product. Hydrogen can be used to produce energy in every application that fossil fuels are currently used. By 2025, the percentage of energy from oil imports could be reduced from the current 50-60% to less than 25%, if hydrogen energy were only to contribute 10% to the overall energy use.

On a life-cycle basis, the emissions associated with hydrogen depend primarily upon the production route used. Renewable resources, such as solar, wind, and biomass are excellent feedstocks for hydrogen because of their inherently clean nature and sustainability.

This study assesses the technical design and economic feasibility of producing hydrogen from gasification, one of the possible biomass-based routes to hydrogen. Biomass is considered to be anything that has participated in the growing cycle recently. Agriculture waste, forest residue, urban wood waste, and trees and grasses grown as energy crops, are commonly the process feedstocks referred to as biomass. Because biomass consumes as much CO_2 in its growing cycle as is produced when it is transformed to energy, the net CO_2 contribution from biomass-derived fuels to the atmosphere is much less than from fossil-derived fuels. Furthermore, producing biomass on a sustainable basis by growing energy crops supports the U.S. agriculture sector and potentially reduces our oil and gas imports.

The gasification system used for this study was the BCL indirectly heated gasifier. The heat necessary for the endothermic gasification reactions is supplied by circulating sand from a char combustor to the gasification vessel. The syngas, containing primarily CO, H_2, CH_4, CO_2, and some higher hydrocarbons, is then steam reformed to produce H_2 and CO_2 in a process based on that used for natural gas reforming. The$_2$H can be purified and sold as an energy carrier to be used in vehicles, power plants, or refinery applications.

2.0 Process Description

Biomass, obtained either from a DFSS, or as agricultural, urban, or industrial waste, is fed to a rotary dryer to reduce the moisture content from approximately 50% to 11%. The biomass is then gasified in the BCL gasifier which is heated indirectly by sand circulating between a char combustor and the gasification vessel. The product syngas is cooled and compressed to the appropriate conditions for reforming. A reactor known as the primary reformer converts the methane and higher hydrocarbons to CO and performs a significant portion of the water-gas shift reaction to convert CO and water to H_2 and CO_2. The remaining CO is consumed via this reaction in the subsequent high temperature and low temperature shift reactors. A pressure swing adsorption (PSA) system is used to separate hydrogen pure enough for use in fuel cell applications from the shift reactors product gas.

2.1 Gasification Using the BCL Indirectly Heated Gasifier

A schematic of the BCL gasifier is shown in Figure 1. This system was simulated using run data from Battelle Columbus Laboratory. A Fortran subroutine controls the simulation of the gasifier and is shown along with the entire run input file in Appendix A. Biomass and char were simulated as non-conventional components; their ultimate analyses are shown in Table 1. The biomass composition used for this study is typical of woody biomass such as hybrid poplar.

Table 1: Elemental Analysis of Biomass and Char

	Ultimate Analysis (Weight percent, dry basis)	
	Biomass	Char
Carbon	50.88	65.2
Oxygen	41.90	3.03
Hydrogen	6.04	3.70
Nitrogen	0.17	2.47
Sulfur	0.09	28.65
Chlorine	0	0
Ash	0.92	3.04

Biomass of approximately 50 wt% moisture is dried in a rotary drier using a combination of char combustor flue gas and air. The dried biomass, containing 11 wt% moisture, is fed to the fluidized bed gasifier, with hot sand from the char combustor as the bed material. It operates at nearly atmospheric pressure and 825°C (1517°F). Steam rather than air or oxygen is added to the gasifier to produce a syngas of medium quality: 18.35 MJ/m^3 (493 Btu/scf). After a cyclone separator removes the char, the syngas is expected to be cleaned using the hot-gas clean-up processes currently being developed by the Department of Energy (DOE) and Westinghouse; the current technology uses a water scrubber. Hot-gas clean-up would consist of ceramic candle filters to remove particulates from the syngas prior to downstream operations such as reforming. The resultant syngas composition is shown in Table 2.

Figure 1: The Battelle Indirectly Heated Atmospheric Gasification System

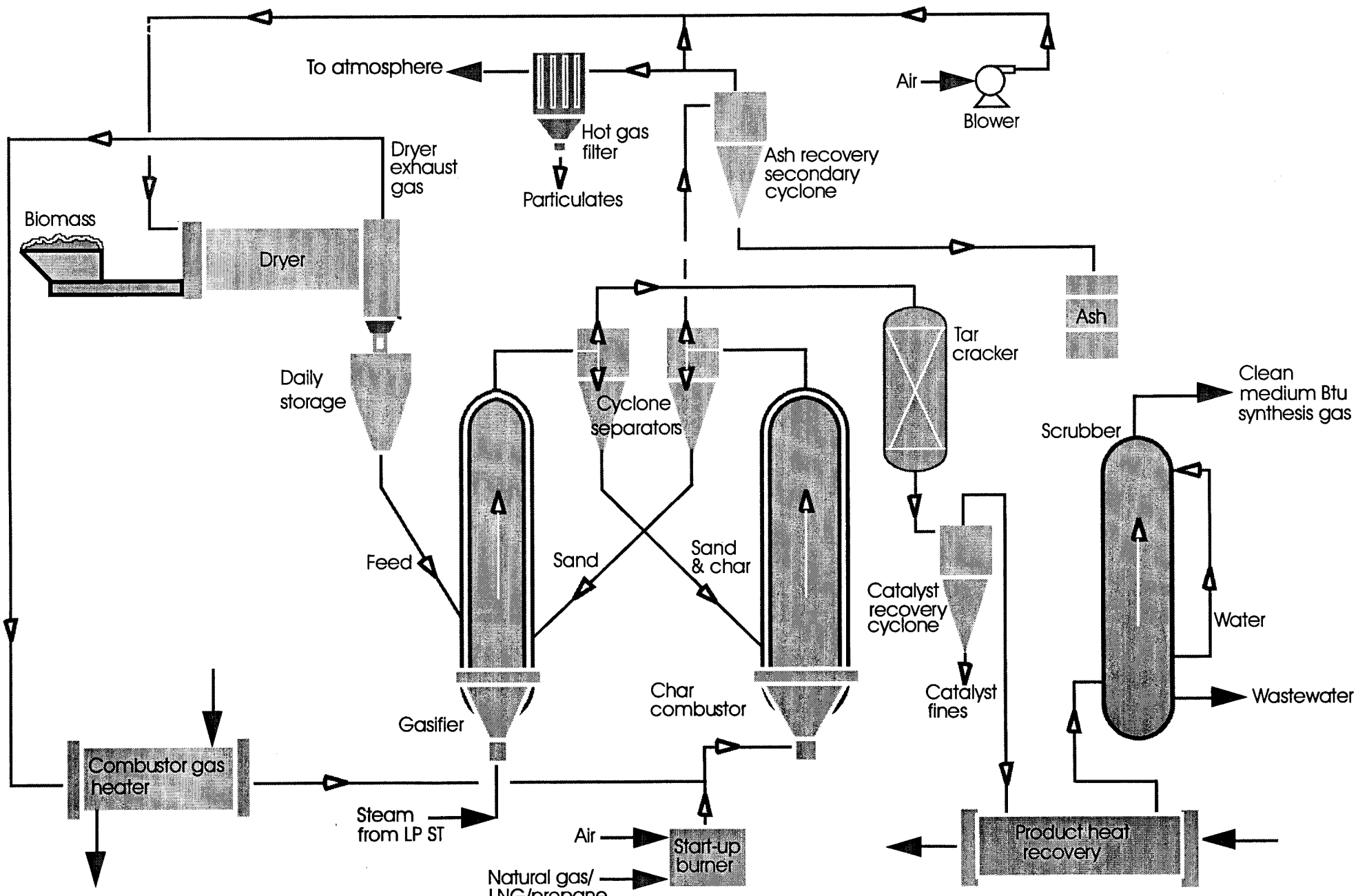

Table 2: Syngas Composition After Cleanup

Component	Volume%
CO	43.17%
H_2	21.22%
CH_4	15.83%
CO_2	13.46%
C_2H_4	4.62%
C_2H_6	0.47%
tar	0.40%
C_2H_2	0.37%
NH_3	0.37%
H_2S	0.08%

After clean-up, the syngas is cooled to 91°C (195°F) so that it can be compressed to the pressure required for the PSA system plus the expected pressure losses in the reactors. During this cooling, the water and higher hydrocarbons (tars) remaining in the syngas will most likely condense and must be removed and pumped before being added again to the compressed syngas. The syngas compressor outlet pressure is 3,654 kPa (530 psi).

2.2 Steam Reforming to Produce Hydrogen

The reforming process, shown in Figure 2, is similar to that used in hydrogen production from natural gas. The major unit operations are a primary reformer to convert methane and the higher hydrocarbons present in the syngas to hydrogen, plus shift reactors to convert CO to hydrogen. The reactions governing the reforming process are shown in the following equations:

(1) $C_nH_m + nH_2O + \text{heat} \Rightarrow nCO + (m/2 + n)H_2$

(2) $CO + H_2O \Rightarrow CO_2 + H_2 + \text{heat}$

The primary reformer, a reactor similar to a process furnace with catalyst-filled tubes, converts the methane and higher hydrocarbons to CO and H_2 (Reaction 1), and performs a significant portion of the water-gas shift reaction to convert CO and water to H_2 and CO_2 (Reaction 2). The remaining CO is consumed via this reaction in the subsequent high temperature and low temperature shift reactors. A pressure swing adsorption (PSA) system is used to purify the hydrogen.

Reaction (1) typically takes place at temperatures between 800°C and 850°C (1472°F and 1561°F) in the primary reformer. The heat necessary for this endothermic reaction is supplied by combusting the PSA offgas outside of the reactor tubes through which the reactants and products are flowing. These tubes are filled with a commercial nickel-based catalyst. According to results from operating plants, the primary reformer was

Figure 2: Reforming Process Schematic

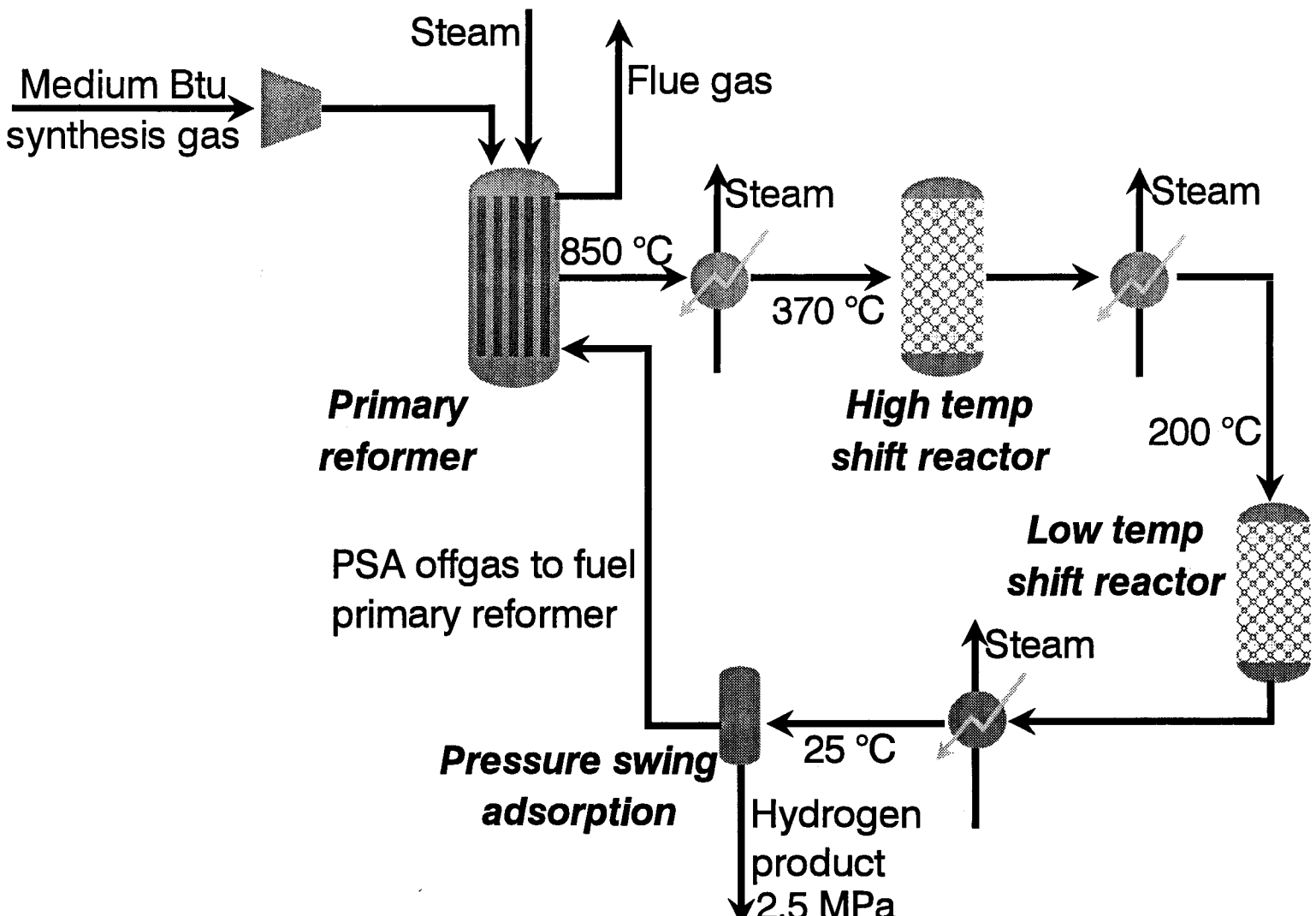

simulated as an equilibrium reactor with an 11 °C approach temperature (Tindall and King, 1991). Reaction (2) is the water-gas shift reaction. According to the thermodynamics of the reforming process, practically all of the tar and C_2H_x species are consumed, 60 mol% of the CH_4 is converted, and there is a 22 mol% net conversion of CO.

Because reaction (2) is exothermic, it is beneficial to convert the remaining CO at a temperature lower than the temperature of the primary reformer. Nearly complete conversion of CO is accomplished in the subsequent high and low temperature shift reactors. The feed to the high temperature shift reactor is cooled to 370°C (698°F) and increases to 435°C (814°F) as the water-gas shift reaction proceeds. The product of this reactor is then cooled to 200°C (392°F) and fed to the low temperature shift reactor that produces a gas at 220°C (430°F) with a dry-basis composition of 61.9% H_2, 34.1% CO_2, 2.9% CH_4, and 1.1% CO.

A steam-to-carbon ratio of three was used for the reforming operations. This is consistent with that used for natural gas reforming. However, higher hydrocarbon feedstocks may require additional steam (Tindall and King, 1991). The higher content of CO in syngas should improve the kinetics of this process over steam reforming natural gas. However, reforming the C_2 and higher compounds could prove more difficult. Actual experimental data will dictate the appropriate steam-to-carbon ratio. The process studied has a great deal of excess heat available from which steam will be produced for export; therefore, a higher reforming steam requirement will not greatly affect the economics of the process.

Before the reformer product stream can be purified in a PSA unit, it must contain at least 70 mol% hydrogen (Anand, 1995). Purifying streams more dilute than this decreases the purity and recovery of the hydrogen. Therefore, part of the PSA product stream is recycled back into the PSA feed. The recovery of hydrogen in the PSA is 85% when purifying a 70 mol% H_2 stream. The incorporation of the recycle loop decreases the overall separation recovery to 77%. The operating pressure of the PSA unit is 2,500 kPa (363 psi).

Three process configurations, or schemes, were studied. Scheme 1 uses all reforming operations typically used in natural gas reforming: the primary reformer, the high temperature shift reactor, and the low temperature shift reactor. Scheme 2 uses only the primary reformer, and Scheme 3 uses the primary reformer and the high temperature shift reactor. All schemes use identical gasification and hydrogen purification processes. Schemes 2 and 3 were studied to assess the profitability of the process if the capital requirements could be lowered at the expense of producing less hydrogen. Because these process configurations are referred to throughout the report as Schemes 1, 2, and 3, Table 3 gives a description of each for easy reference.

Table 3: Summary of Unit Operations Used in Different Process Configurations

Scheme	Reforming operations used
1	Primary reformer, high temperature shift reactor, low temperature shift reactor
2	Primary reformer
3	Primary reformer, high temperature shift reactor

2.3 Steam Generation

In the simulation, gasification and reforming were integrated such that heat available from the reforming operation could generate the steam necessary for gasification as well as a substantial amount of export steam. The process gas was cooled as it moved between the primary reformer, the shift reactors, and the PSA unit, generating steam in each step. Steam was also generated by cooling the primary reformer flue gas. The majority of the steam produced was superheated at 690 kPa (100 psig); the steam produced by cooling the process gas between the high and low temperature shift reactors was at 3,450 kPa (500 psig).

A complete process flow diagram corresponding to the simulation is shown in Figure 3. Appendix C contains stream data for the 907 T/day plant.

3.0 Conversion Efficiency

Two methods were used to estimate the efficiency of producing hydrogen from biomass by this process. The first method looks at the ratio of the amount of hydrogen that was produced to the stoichiometric maximum amount of hydrogen possible according to reactions (1) and (2). The second method calculates the ratio of the energy value of the product hydrogen and export steam to the energy value of the biomass feed plus purchased electricity. The amount of hydrogen produced for each plant size and scheme is shown in Table 4.

Table 4: Hydrogen Produced in Each Scenario Analyzed (standard m^3/day)

	Scheme 1	Scheme 2	Scheme 3
27 T/day biomass	21,600	16,850	20,440
272 T/day biomass	215,940	168,500	204,390
907 T/day biomass	719,800	561,650	681,280

3.1 Stoichiometric Maximum Efficiency Calculation

The "molecular formula" of biomass can be approximated as $CH_{1.47}O_{0.67}$ on a dry basis. Completely steam reforming this biomass yields 2.07 moles of hydrogen per "mole" of biomass as shown by the following stoichiometry:

$$CH_{1.47}O_{0.67} + 1.33H_2O \Rightarrow CO_2 + 2.07H_2$$

This hydrogen yield is equivalent to 2.02 standard m^3 hydrogen/kg biomass (32.38 scf/lb). In Scheme 1, with all reforming operations used, 0.79 standard m^3/kg (12.71 scf/lb) hydrogen is produced. This corresponds to a 39.3% conversion and recovery efficiency.

ASPEN Plus Process Flow Diagram
Producing Hydrogen by Steam Reforming Biomass Syngas

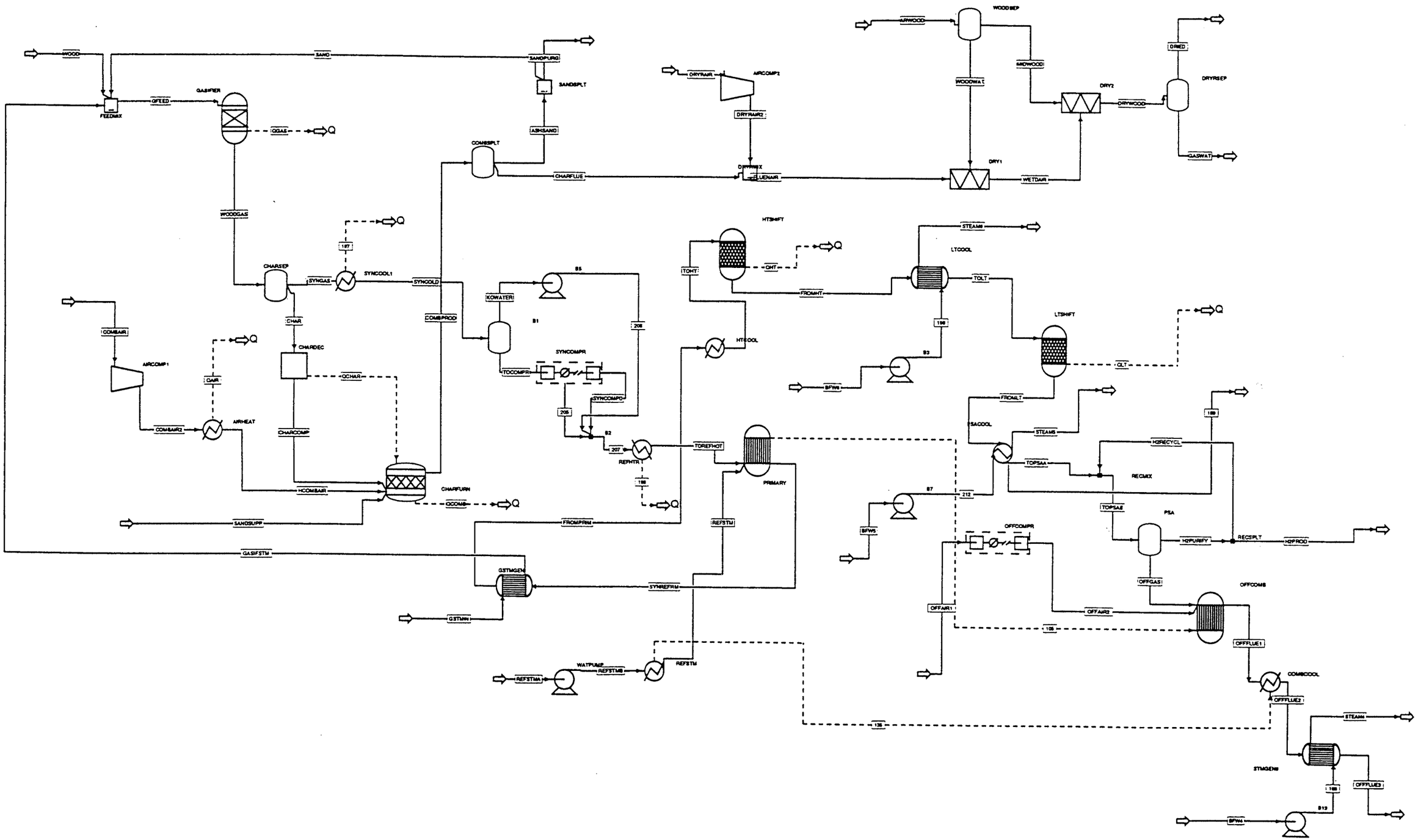

Figure 3

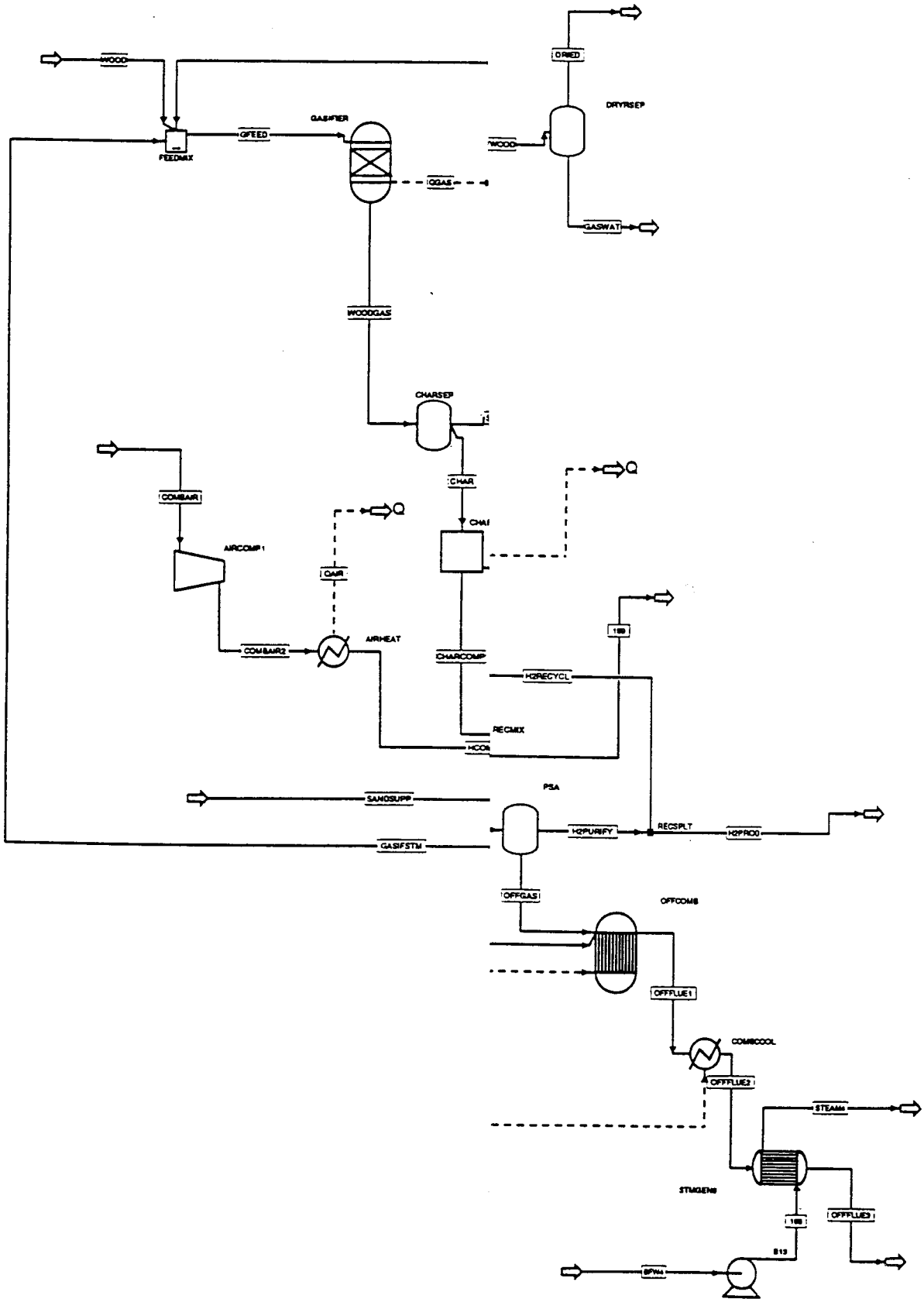
WOOD
DRIED
DRYRSEP
GASIFIER
GFEED
FEEDMIX
WOOD
QGAS
GASWAT
WOODGAS
CHARSEP
CHAR
Q
COMBAIR
Q
CHAI
AIRCOMP1
QAIR
COMBAIR2
AIRHEAT
CHARCOMP
H2RECYCL
RECMIX
HCOR
PSA
SANDSUPP
H2PURIFY
RECSPLT
H2PROD
GASIFSTM
OFFGAS
OFFCOMB
OFFFLUE1
COMBCOOL
OFFFLUE2
STEAM4
STMGEN8
OFFFLUE3
BFW4

3.2 Energy Conversion Efficiency Calculation

The efficiency of this process on an energy in, energy out basis can be calculated by the following formula:

$$\frac{(H_2)(HHV_{H2}) + (stm_{ex})(\Delta H_{sh})}{(B_f)(HHV_b) + e}$$

where:
H_2 = hydrogen recovered (kg)
HHV_{H2} = higher heating value of hydrogen (GJ/kg)
ΔH_{sh} = difference in enthalpy between incoming water and steam produced (GJ)
stm_{ex} = steam produced to be sold (kg)
B_f = biomass fed to process (kg)
HHV_b = higher heating value of biomass (19.75 MJ/kg = 8,500 Btu/lb)
e = electricity imported for process requirements (GJ equivalent)

The efficiencies calculated for the three schemes are shown in Table 5.

Table 5: Process Conversion Efficiencies

	Stoichiometric Efficiency	Energy Conversion Efficiency
Scheme 1	39.3%	79.0%
Scheme 2	30.6%	69.7%
Scheme 3	37.2%	76.5%

4.0 Economic Analysis

The current market value of hydrogen is between $5 and $15/GJ. By calculating the economics of the process being studied and comparing the results to this current hydrogen market, the potential profitability can be assessed. Possible sources of error in this analysis are in equipment cost estimation, feedstock and product market predictions, and invalid economic assumptions. The total error can be reduced by looking at ranges of profitability, such as the range of hydrogen selling price versus a range of biomass feedstock costs. As more information on the development of biomass-based technologies becomes available, this analysis can be modified to give a more representative process cost.

The economic feasibility of producing hydrogen by steam reforming syngas from the BCL gasifier was studied using the DCFROR method. This method calculates the IRR that will be earned on the initial capital investment over the life of the project. Given this rate and a feedstock cost, the necessary selling price of the product can be calculated. Often, the IRR is specified as the minimum acceptable rate for an investor to finance a project. Therefore, the perceived risk of the project can be incorporated into the IRR. Because the process of producing hydrogen from biomass currently carries higher risks than conventional hydrogen-generating processes, the IRR specified in this study was 15% after tax, while the rate for conventional processes is between 9% and 12%. For a 37% tax rate, a 15% after-tax IRR corresponds to a pre-tax IRR of 20.3%.

As an alternative means of measuring the economic feasibility of this process, an ROI analysis was also performed. The ROI is the sum of the net present value of each project year's revenue, divided by the initial capital investment. The discount rate used to bring all revenues and costs to the value of what money is worth today (or at any defined time) is set so that the ROI equals zero. This practice is also known as setting the net present value equal to zero.

4.1 Economic Assumptions

The economic analysis for this study was based on current dollars and performed using equity financing, assuming that the capital will not be borrowed. The latter assumption is probably valid for the smaller-scale plants, less so for the large plant. The majority of the assumptions used in performing the economic analysis are shown in Table 6. Other assumptions, such as the percentage of the purchased equipment cost spent on piping, can be found in the cost sheets in Appendix B.

Table 6: Economic Assumptions

January, 1995 dollars
Equity financing
20 year plant life
Two year construction period
90% on-line factor
Royalties = 0.5% of sales
Inflation rate = 5%
Tax rate = 37%
Straight-line depreciation for ten years; first and last year at 50% of other years
50% plant capacity first year of production
30% of capital investment spent first year, 70% second year

4.2 By-Product Credit: Steam

A by-product credit was taken for the steam generated in the process. A selling price of $7.88/1000 kg ($3.57/1000 lb) was assumed for 3,450 kPa (500 psig) steam. A price of $5.18/1000 kg ($2.35/1000 lb) was assumed for 690 kPa (100 psig) steam (Peters and Timmerhaus, 1980). All steam produced contains 17 °C superheat. The amount of steam produced is shown in Table 7. The amount of steam generated for Schemes 2 and 3 is not expected to be significantly different from that generated in Scheme 1 because the same or higher amount of heat will be available. The assumption that the steam will be able to be sold is probably valid for the medium and large plants as they will most likely be located in more industrialized centers to take advantage of other infrastructure. However, it may be difficult to sell the steam produced by the small plant, as this size represents small refueling stations located near the demand for hydrogen.

Table 7: By-Product Steam Generated

Source of Heat (stream name in Figure 3)	Amount Produced, kg steam / kg dry biomass	Pressure, kPa (psig)
Cooling gas between high and low temperature shift (FROMHT)	0.32	3,450 (500)
Compression of syngas (TOCOMPR)	1.26	690 (100)
Compression of air fed to offgas combustor (OFFAIR1)	0.12	690 (100)
Cooling offgas combustor flue gas (OFFFLUE)	0.43	690 (100)
Cooling gas going to PSA (TOPSA)	0.85	690 (100)

4.3 Equipment Sizing and Costing

The material and energy balance results from the ASPEN Plus™ simulation were used to determine the size and corresponding costs of major pieces of equipment for the process. Costs were taken from the ChemCost software package and published literature and brought to January 1995 dollars using equipment cost escalation ratios from Chemical Engineering Magazine (March, 1995). Some costs, especially those related to gasification, were taken from other studies. Detailed cost results can be found in the cost sheets in Appendix B.

4.3.1 Gasification Costs

The cost of the gasification train was estimated in a previous study for DOE's Biomass Power Program, as well as by several consulting firms working for BCL (Breault and Morgan, 1992; Double, 1988; Dravo Engineering Companies, 1987; Weyerhaeuser, 1992). These costs were scaled to the appropriate plant size for this study using a 0.7 scale factor. Unit operations included in these costs were the feed system, dryer, gasifier, char combustor, cyclone separators, hot-gas cleanup system, and necessary pumps and compressors. The gasification steam generator (heat exchanger and flash drum) cost was calculated separately and included with the reformer costs.

4.3.2 Reactor Costs

The reactors sized and priced for this study were the primary reformer, the high temperature shift reactor, and the low temperature shift reactor.

A thermodynamically-controlled reactor block was used to model the primary reformer in ASPEN Plus™. This block predicts the final reaction products based on minimization of Gibbs free energy. An 11 °C temperature approach to equilibrium was used in accordance with results from natural gas reforming operations (Tindall and King 1991). The heat for the endothermic reactions (Reaction 1) taking place in this reactor was supplied by burning the PSA offgas that consists of unrecovered hydrogen, CH_4, CO and inerts. An equilibrium block was also used to model this combustor, and taken together, the two reactor blocks represent the primary reformer. The cost of the primary reformer was based on a furnace reactor, taken from three sources and averaged (see Appendix B cost sheets).

The costs of the high and low temperature shift reactors were based on a space velocity of 4000/hr (Kirk-Othmer, V.13, p 856) and a height-to-diameter ratio of 2. The cost of the reactor as a function of height, diameter, and material of construction was determined using ChemCost. Costs from other sources were similar.

4.3.3 Compressor Costs

The two compressors necessary for this process are the syngas compressor and the air compressor for the offgas combustor. Both are four stage compressors with interstage cooling. As noted in Table 7, steam is generated by cooling the gas being compressed between stages. The costs of these compressors were calculated by ChemCost as eight individual compressors of the required horsepower. See cost sheets in Appendix B for the power requirements and resultant costs. The interstage coolers were calculated separately as heat exchangers and flash drums.

4.3.4 Heat Exchanger Costs

Heat exchangers were modeled as counter-current in the simulation. The minimum approach temperature used was 11°C. The required area for a heat exchanger was calculated from the appropriate heat duty, temperature difference, and heat transfer coefficient. ChemCost was used to derive the corresponding cost.

4.3.5 Pump Costs

The cost of each pump required for the process was calculated by ChemCost using the flowrate and outlet pressure.

4.3.6 PSA Cost

The appropriate PSA design is very specific to the application, therefore, the manufacturers would most likely design and cost it for the potential buyer. Because this study is only to assess feasibility and not to design a planned operation, the capital and operating costs of the PSA unit were taken from the literature (Schendel, et al, 1983) and scaled according to the amount of hydrogen produced. The installed capital of a PSA system was \$7.164/thousand standard m^3/d (\$253/thousand scfd). The operating costs were \$0.184/thousand standard m^3/d (\$6.50/thousand scfd).

4.3.7 Operating Costs

Operating costs for this process include the feedstock, electricity to run the compressors (\$0.05/kWh), water for steam generation and cooling (\$330/m^3), and labor. The revenue from steam produced for export is taken as an operating cost credit. Detailed operating costs for each plant can be found in the cost sheets in Appendix B.

4.4 Economic Analysis Results

The capital and operating costs for each of the scenarios studied are shown in Table 8. These costs were calculated using a feedstock cost of \$16.50/T for the small and medium size plants and \$46.30/T for the large plant. Operating costs would increase significantly if the medium size plant obtained its biomass from a DFSS.

Table 8: Capital (MM$) and Operating Costs (MM$/year)

	Scheme 1			Scheme 2			Scheme 3		
Plant size	sm	med	lg	sm	med	lg	sm	med	lg
Operating Costs	0.30	1.73	14.1	0.28	1.43	13.1	0.31	4.39	14.1
Fixed	0.15	0.27	0.33	0.16	0.27	0.33	0.16	0.27	0.33
Variable	0.16	1.60	5.33	0.13	1.30	4.32	0.16	1.60	5.32
Byproduct credit	-0.16	-1.62	-5.38	-0.16	-1.62	-5.38	-0.16	-1.62	-5.38
Feed	0.15	1.48	13.8	0.15	1.48	13.8	0.15	4.14	13.8
Capital Costs	6.08	34.5	90.4	5.05	29.3	80.0	6.02	34.0	89.1

The results of the DCFROR analysis are shown in Figures 4 through 9. Because the eventual price of biomass needed to supply plants such as those studied here is unknown, these figures give the biomass feedstock cost that can be paid to produce hydrogen within the current market values. Conversely, if the biomass cost can be accurately assessed, the necessary hydrogen selling price from this process can be obtained. Figures 4, 6, and 8 show the pre-tax production cost of hydrogen in each of the three schemes at the different plant sizes. Figures 5, 7, and 9 show the necessary hydrogen selling price given a 37% tax rate and a 15% after-tax IRR. With the market value of hydrogen between $5/GJ and $15/GJ, these figures show that hydrogen can be produced from biomass to compete with current hydrogen production methods on the large and medium scale for all configurations studied. However, the necessary hydrogen selling price is highly dependent upon the biomass feedstock cost, and low-cost biomass will need to be obtained to justify hydrogen from this process, particularly on the small scale. For easy reference, a summary of these results is shown in Table 9. Hydrogen selling prices were calculated using biomass feedstock prices of $16.50/T for the small plant and $46.30/T for the large plant. Because it is uncertain if nearly 300 T/day waste biomass at the lower price can be secured, both $16.50/T and $46.30/T were used to calculate the minimum selling price for the medium size plant. The results shown in this table are representative only of the situations for which biomass can be obtained at the listed prices. The actual biomass price for a given region and situation should be used when assessing the necessary hydrogen selling price from this process. Figures 4 through 9 can be used when assessing specific situations.

Figure 4: Production Cost of Hydrogen From Steam Reforming Biomass Syngas (Scheme 1), Pre-tax

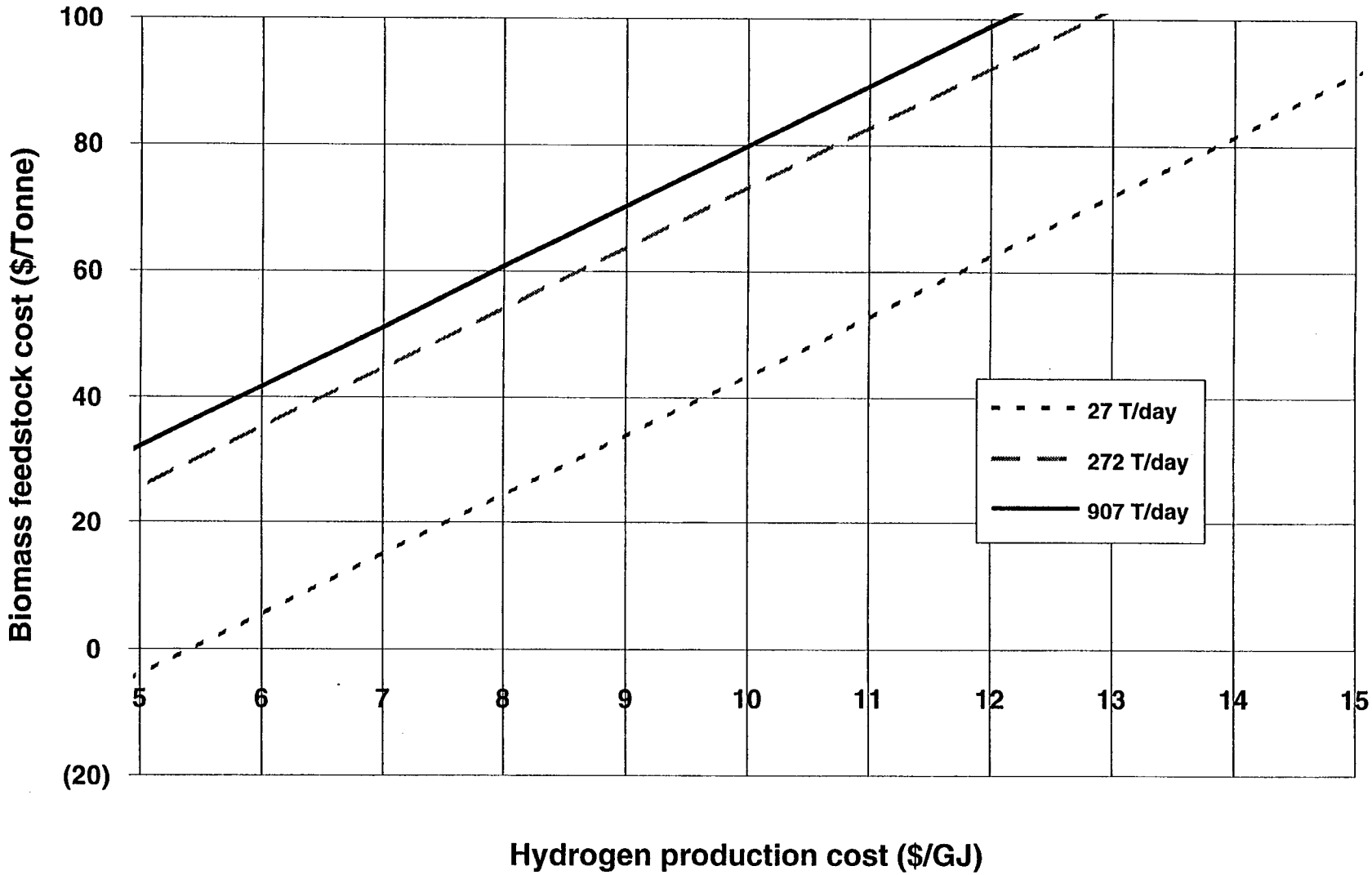

Figure 5: Selling Price of Hydrogen From Steam Reforming Biomass Syngas (Scheme 1), After Tax, 15% IRR

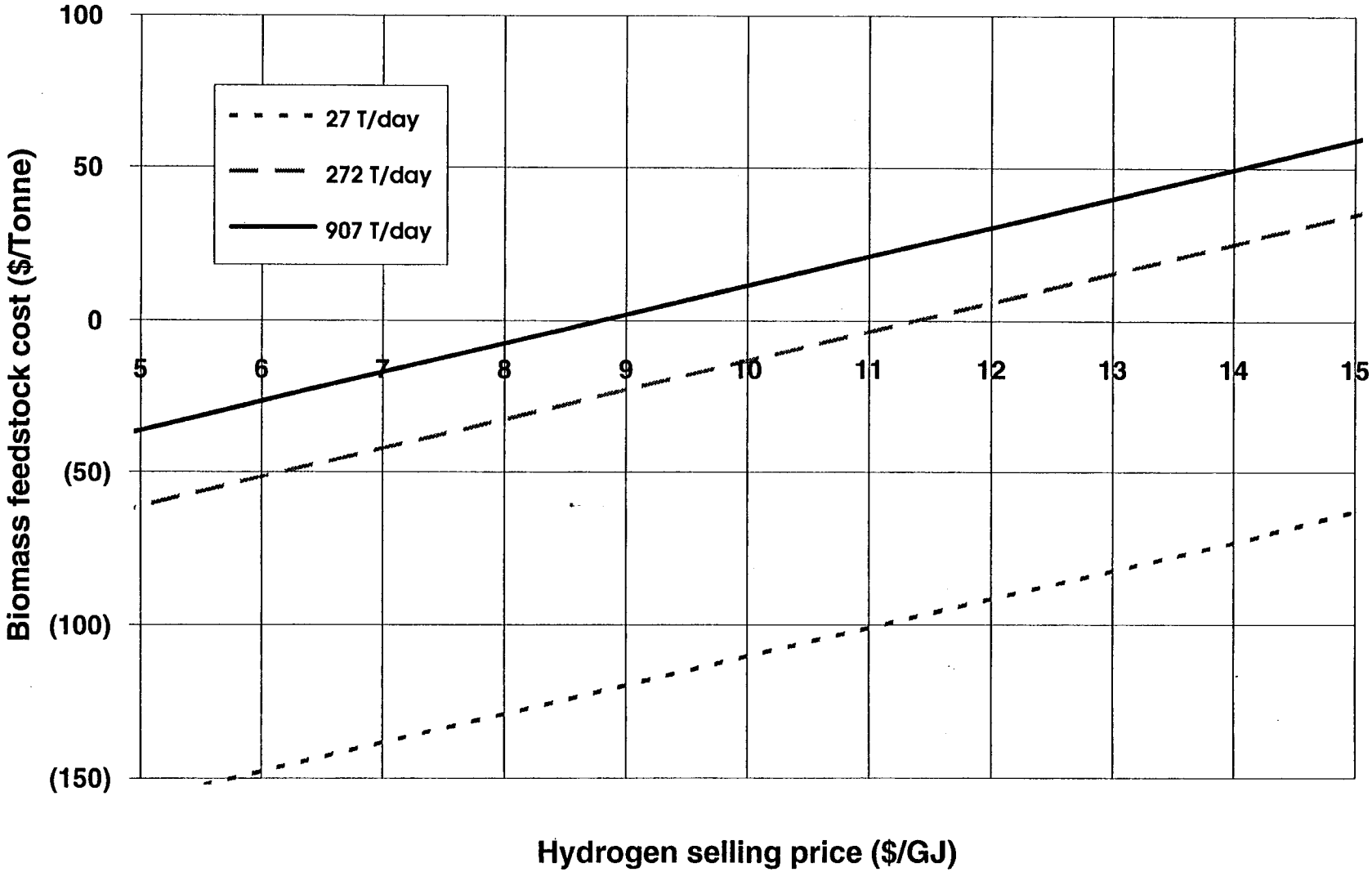

Figure 6: Production Cost of Hydrogen From Steam Reforming Biomass Syngas (Scheme 2), Pre-tax

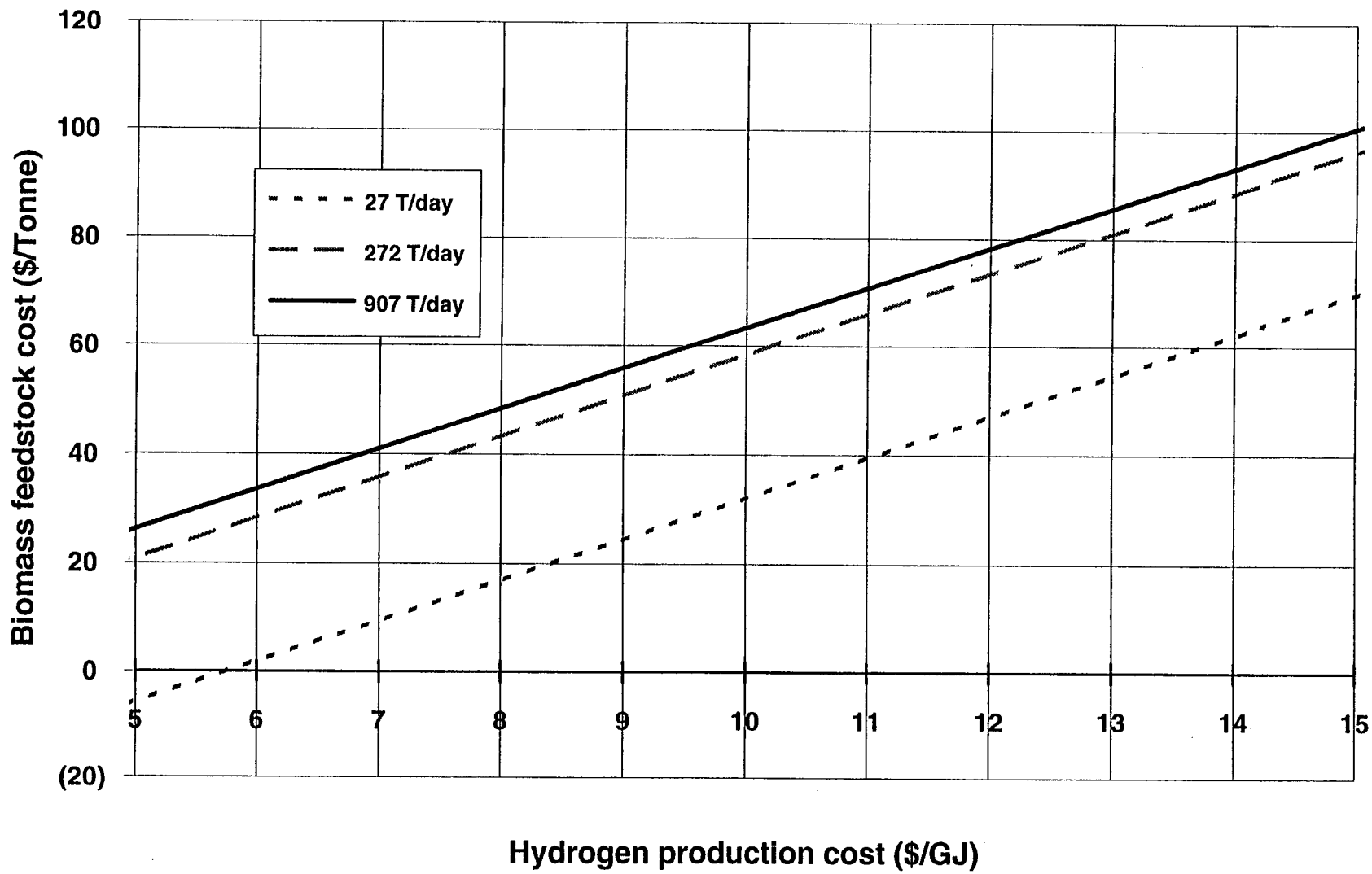

Figure 7: Selling Price of Hydrogen From Steam Reforming Biomass Syngas (Scheme 2), After Tax, 15% IRR

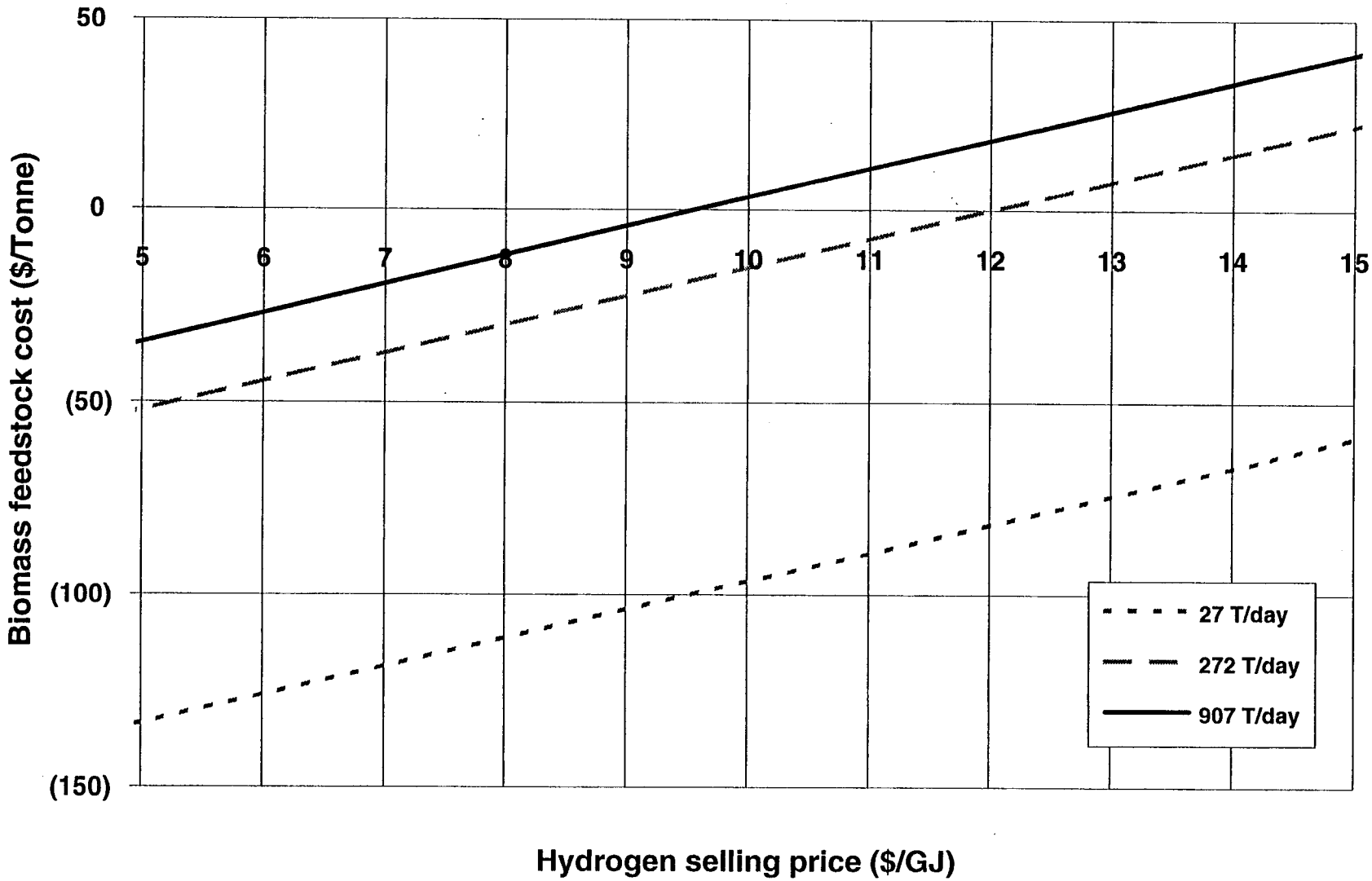

Figure 8: Production Cost of Hydrogen From Steam Reforming Biomass Syngas (Scheme 3), Pre-tax

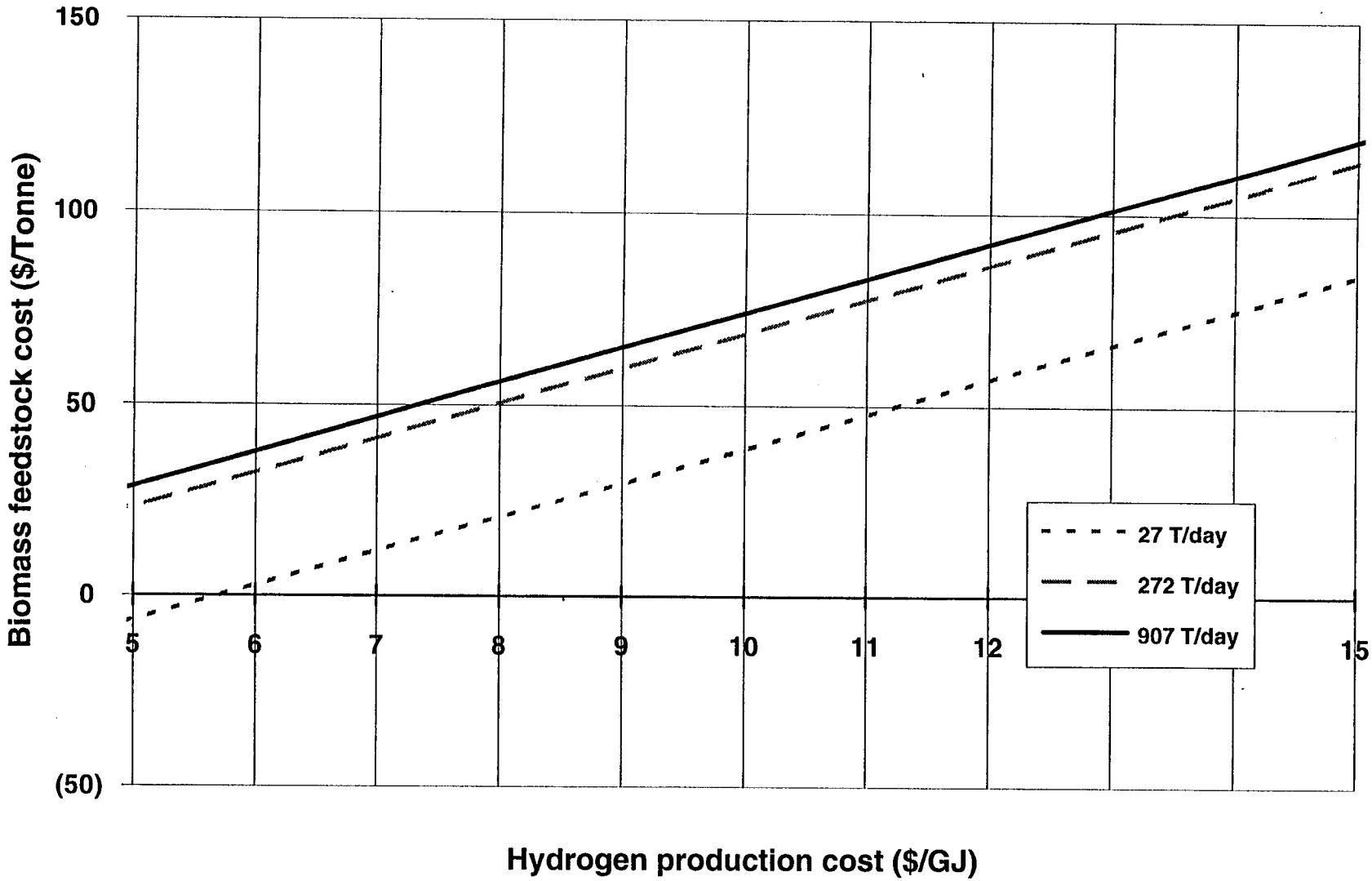

Figure 9: Selling Price of Hydrogen From Steam Reforming Biomass Syngas (Scheme 3), After Tax, 15% IRR

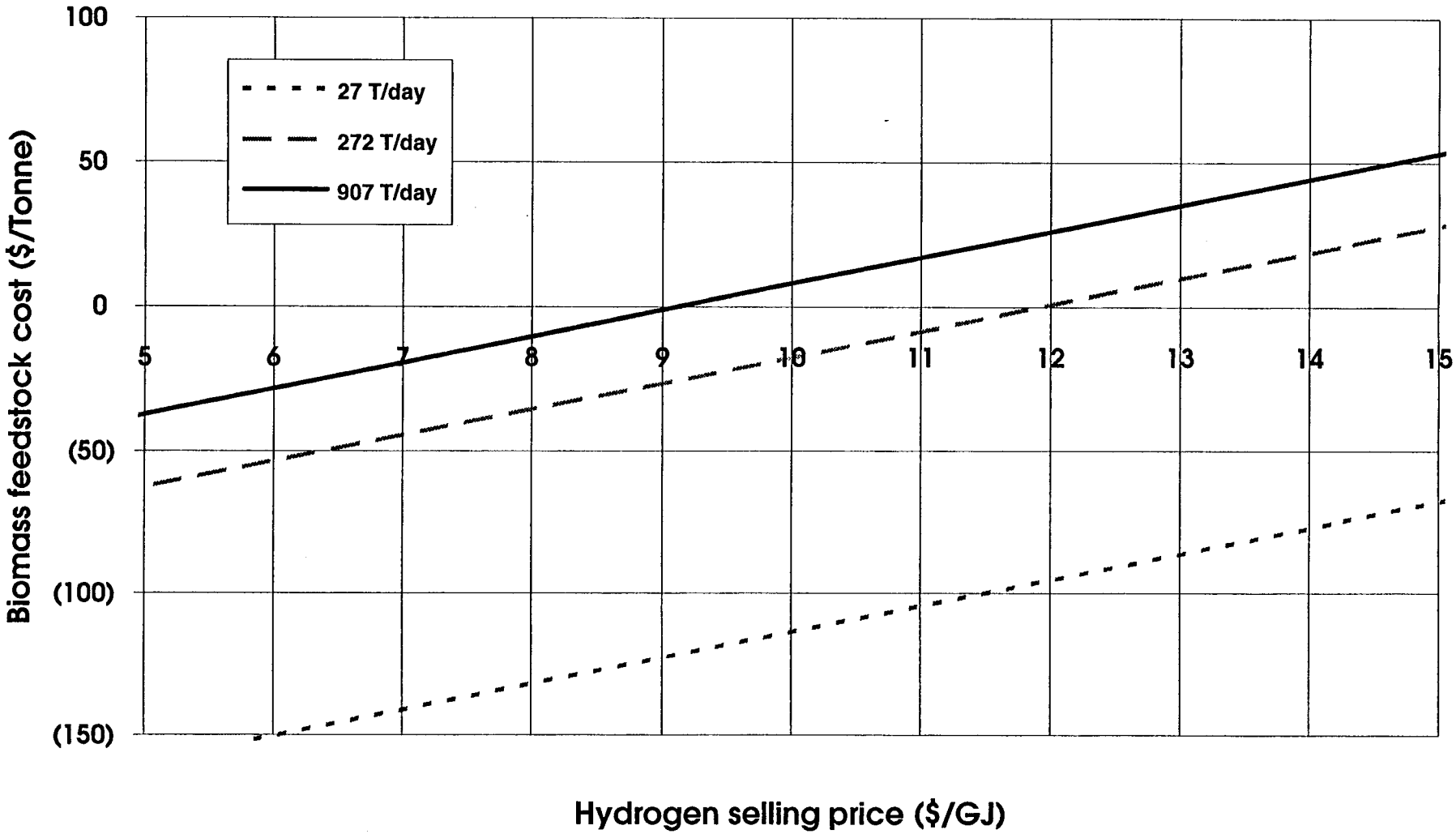

Table 9: Necessary Hydrogen Selling Price for a 15% after-tax IRR After Taxes

	Plant size	Biomass cost ($/T)	Hydrogen selling price ($/GJ)
Scheme 1	small	16.50	23.20
	medium	16.50	13.10
	medium	46.30	16.20
	large	46.30	13.70
Scheme 2	small	16.50	25.10
	medium	16.50	14.20
	medium	46.30	18.20
	large	46.30	15.70
Scheme 3	small	16.50	24.30
	medium	16.50	13.70
	medium	46.30	17.00
	large	46.30	14.20

From Figures 4 through 9, it can be seen that the cost of producing less hydrogen in Schemes 2 and 3 is higher than the savings obtained by eliminating some unit operations in the reforming section of the process. Of the three process configurations studied, the most profitable is Scheme 1. Of the two configurations with reduced reforming operations, Scheme 3, with the primary reformer and high temperature shift reactor, is more economic than Scheme 2 with only the primary reformer. This is because the majority of the water gas shift reaction takes place in the high temperature shift reactor. Scheme 3 is not as economic as Scheme 1 even though capital costs are lower because of the absence of the low temperature shift reactor, the decreased amount of hydrogen that is produced reduces the net income over the life of the plant.

The most economic size for the process studied depends upon the feedstock cost. If the medium size plant can be supplied with waste biomass at a cheaper price (i.e., $16.50/T) than the biomass supplied by a DFSS, the necessary hydrogen selling price from the medium size plant is lower than that from the large plant. However, if the medium and large plants must both use biomass from a DFSS, the larger plant is more economically feasible. The medium size plant is more economic than the small plant if biomass at the same feedstock cost is used in each. Figures 4 through 9 also show that there is a larger economy of scale realized in going from the small to the medium size plant than in going from the medium to the large plant. Figure 5 shows that for positive biomass feedstock costs, the necessary hydrogen selling price would have to be at least $8.70/GJ and $11.20/GJ for the large and medium size plants, respectively. Unless biomass at extremely low costs can be obtained, hydrogen produced in the small indirectly heated gasification and reforming operation is not economically feasible. Figures 7 and 9 give similar results.

Figures 10 through 12 show the cumulative cash flow for the three plant sizes for Scheme 1 over a twenty-year plant life. The corresponding curves for Schemes 2 and 3 are similar. Figures 10 and 11 show the cash flow for the 27 and 272 T/day plant using a biomass feedstock cost of $16.50/T. Figure 12 is the cash flow diagram for the 907 T/day plant using a feedstock cost of $46.30/T. Each diagram is based on a hydrogen selling price of $11/GJ ($12/MMBtu). The break-even point for the medium plant (6.3 years) is sooner than that for the large plant (7.2 years) because of the lower feedstock cost. If the medium plant were also using biomass at $46.30/T, the break-even point would be 9.5 years.

Table 10 gives the discount rate used to set the net present value to zero for each scheme at the three plant sizes. This rate was calculated using a hydrogen selling price of $11/GJ ($12/MMBtu). The biomass costs used were $16.50/T for the small plant and $46.30/T for the large plant; the discount rate for the medium plant was calculated using both biomass costs. The rates obtained in this analysis are low in comparison to other processes which reach commercialization. A better estimate for how much the biomass feed will cost will reduce some of the uncertainty in these calculations, and it may be that the discount rates are higher than reported here.

Table 10: Discount Rate Obtained from Return on Investment Analysis

	Plant size	Biomass cost ($/T)	Discount rate for NPV=0 (%)
Scheme 1	small	16.50	4.0
	medium	16.50	10.4
	medium	46.30	6.7
	large	46.30	9.2
Scheme 2	small	16.50	3.0
	medium	16.50	9.4
	medium	46.30	4.7
	large	46.30	6.6
Scheme 3	small	16.50	3.5
	medium	16.50	9.9
	medium	46.30	6.0
	large	46.30	8.4

Figure 10: Cumulative Cash Flow for a 27 T/day Biomass Gasification and Reforming Facility

Feedstock cost = $16.50/T

Hydrogen selling price = $12/GJ

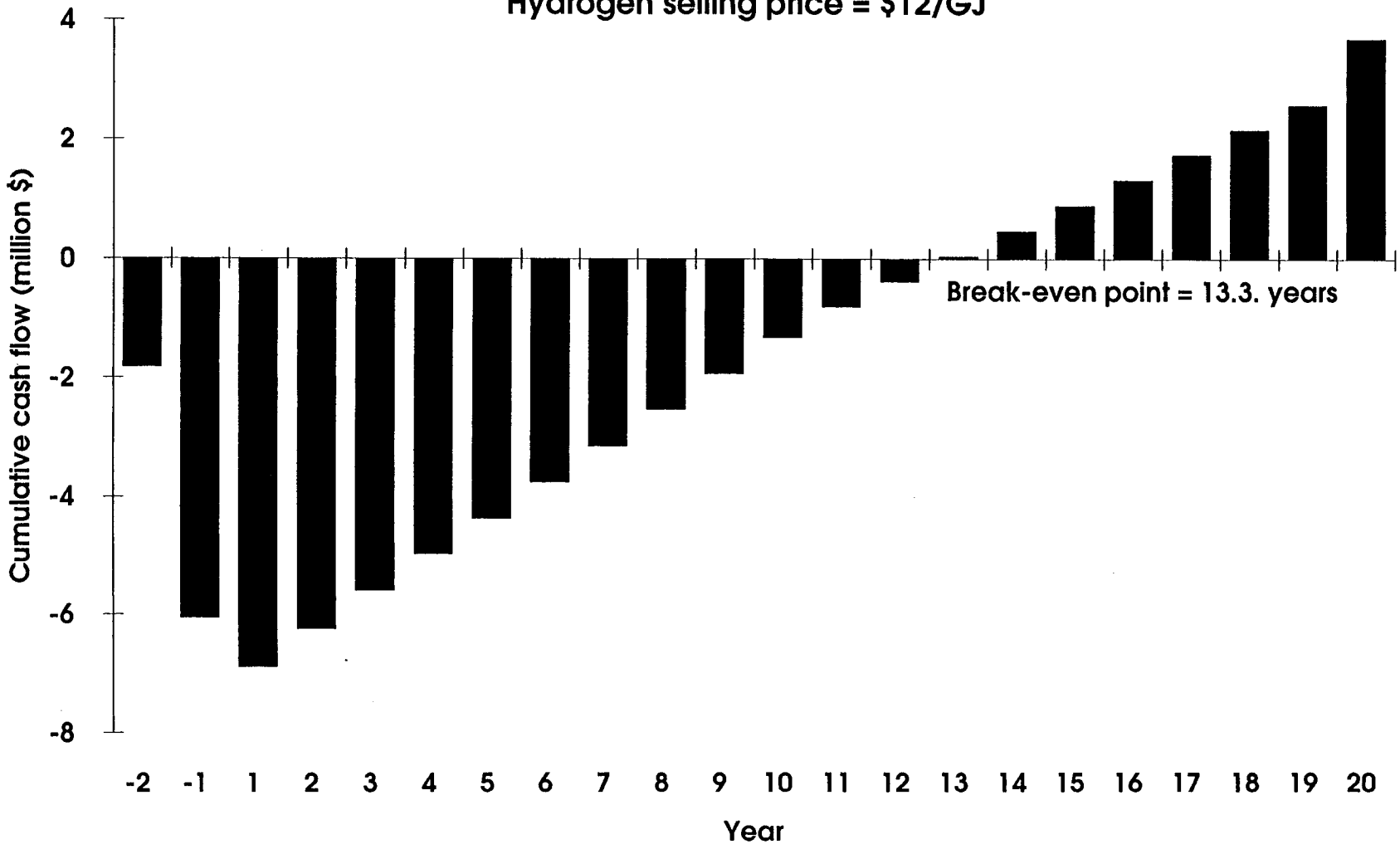

Figure 11: Cumulative Cash Flow for a 272 T/day Biomass Gasification and Reforming Facility

Feedstock cost = $16.50/T

Hydrogen selling price = $12/GJ

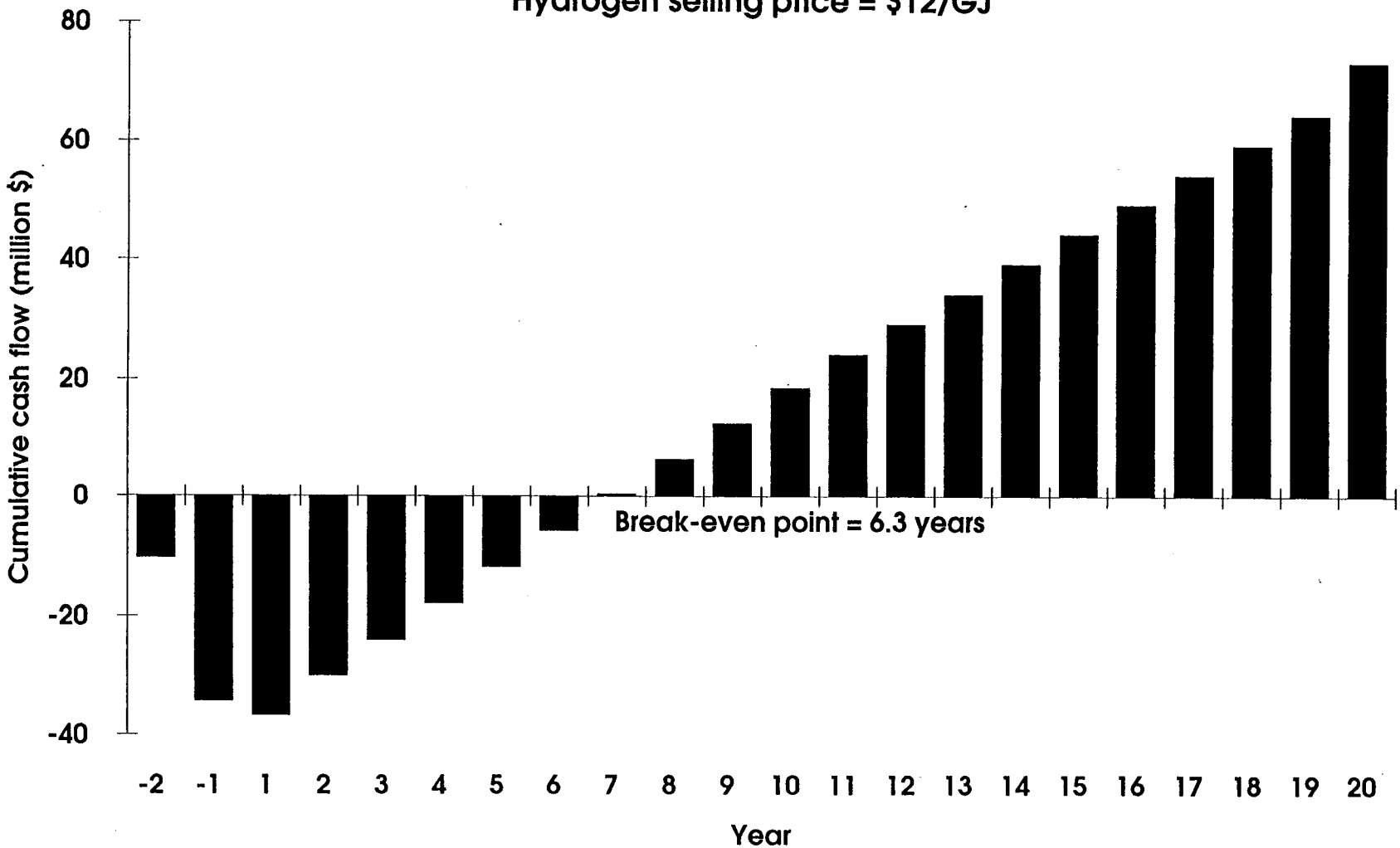

Figure 12: Cumulative Cash Flow for a 907 T/day Biomass Gasification and Reforming Facility

Feedstock cost = $46/T

Hydrogen selling price = $12/GJ

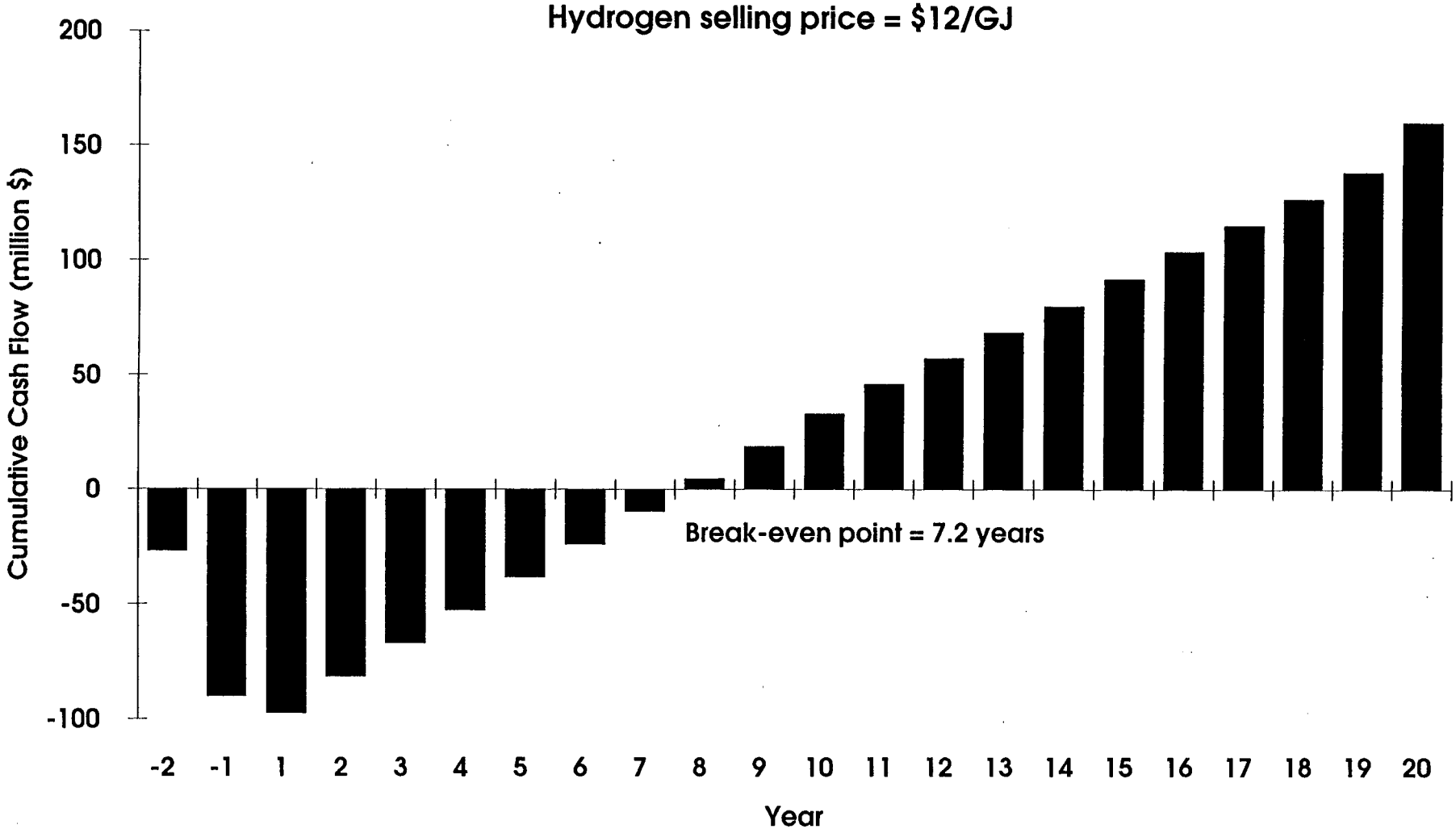

5.0 Conclusions

Compared to conventional hydrogen producing processes, many of the criteria for successful commercialization of this process are not met. This is because the gasification technology is not fully optimized and tested, and that the reforming process was developed specifically for natural gas and not biomass syngas. Additionally, a higher and more conservative IRR was used for the DCFROR analysis. The necessary selling price of hydrogen from this process falls at the higher end of the current market value range. Also, the discount rates obtained in the ROI analysis are low and the break-even times are fairly long. Therefore, improvements in process design and conversion yields will be necessary for this process to be readily commercialized.

The necessary selling price of hydrogen produced by steam reforming syngas from the BCL gasifier falls within current market values for many of the scenarios studied. The factors that determine which scenario is the most economically feasible are design configuration, plant size, and biomass feedstock costs. The configuration that produces the least expensive hydrogen is that which uses all reforming operations, Scheme 1. Therefore, for the reforming process studied, as much hydrogen as possible should be made at the expense of higher capital equipment charges. Of the three plant sizes studied, the most economic configuration depends upon the availability of waste biomass at a lower price than biomass from a DFSS. If waste biomass can be obtained for the medium size plant, this scale is the most economic. However, if DFSS biomass must be used for both the medium and large plants, the 907 T/day plant produces hydrogen at a cheaper price than the 272 T/day plant. Results show that unless biomass can be obtained at very low prices, producing hydrogen from a very small plant acting as a local refueling station will not be economically competitive.

As the development of biomass-based technologies continues and better predictions for the costs of biomass from energy crop improvements can be made, the examples of costs given in this study can be revisited using the curves of hydrogen price versus feedstock cost. For this process to be economically viable in the marketplace, low biomass costs will probably be necessary. As research continues on processes that use biomass and as uncertainties are addressed, the risk of investing in such projects will decrease. This will reduce the necessary hydrogen selling price and provide a shorter break-even point.

6.0 Future Work

Additional benefits of producing hydrogen on the small scale via reforming syngas from the BCL gasifier should be studied and incorporated into the estimated cost. For example, if hydrogen is produced at the point of its intended use, compression, storage, and transportation costs will be lower than on the larger production scale, or eliminated completely. On the medium and large scales, this cost mitigation is less likely, thus making on-site hydrogen production more attractive than shown in this report.

The ASPEN Plus™ model of the reforming operation will be optimized to increase hydrogen production efficiency and reduce costs. Areas targeted for improvement will be determined from sensitivity analyses within ASPEN Plus™ and the economic spreadsheet model. One option that might help costs is the addition of a steam turbine to produce electricity from the excess heat in the reforming operation. Also, a quench operation will be tested to cool the feed to the PSA unit. Furthermore, new information obtained in the testing and scale-up of the BCL gasifier will be incorporated into this analysis to measure cost improvement.

As biomass-based processes become better developed and the uncertainties associated with the cost of the biomass feedstock decrease, the assumptions made in this analysis will be revisited. Currently, the biomass feedstock cost is a result of the analysis, determined from the cost curves set between the current high and low market values of hydrogen.

A life cycle assessment will be conducted on these processes to determine their environmental impacts in terms of energy consumption and emissions to water and the air. This will include a comparative analysis of conventional hydrogen producing processes.

The economic and environmental effects of reforming a mixture of biomass syngas and natural gas should be studied. Because the stoichiometric maximum amount of hydrogen that can be produced from methane is higher than from syngas, the overall amount produced would be higher. This scenario would allow for higher hydrogen recovery by avoiding the need for the recycle stream used to increase the percentage of hydrogen in the PSA feed, while maintaining or sacrificing only a small portion of the benefits obtained in using a biomass-based process. This may also be a means of transition from the current hydrogen production technologies to a renewable technology.

References and Pertinent Literature

Anand, M. (April, 1995). *Personal Correspondence.*

Bain, R. (January 14, 1992). *Material and Energy Balances for Methanol from Biomass Using Biomass Gasifiers.* Golden, Colorado: National Renewable Energy Laboratory.

Bland, W.; Davidson, R.L., eds. (1967). *Petroleum Processing Handbook.* New York: McGraw-Hill; pp. 140–148.

Branan, C., ed. (1994). *Rules of Thumb for Chemical Engineers.* Houston, Texas: Gulf Publishing Company.

Breault, R.; Morgan, D.; (1992). *Design and Economics of Electricity Production from and Indirectly Heated Biomass Gasifier.* Report TR4533-049-92. Columbus, Ohio: Battelle Columbus Laboratory.

Chornet, E.; Czernik, S.; Wang, D.; Mann, M. (1994). *Biomass to Hydrogen via Fast Pyrolysis and Reforming.* Department of Energy Hydrogen Program Review.

Chum, H.L.; Black, S.K. *Process for Fractionating Fast Pyrolysis Oils and Products Derived Therefrom.* U.S. Patent No. 4,942,269 (17 July 1990).

Double, J.M.; (1988) *Design, Evaluation and Costing of Biomass Gasifiers.* Doctoral Thesis.

Dravo Engineering Companies. (1987). Gasification Capital Cost Estimation. Obtained from Mark Paisley in personal correspondance, August, 1994. Battelle Columbus Laboratory.

Feldmann, H.; Paisley, M.A. (May 1988). *Conversion of Forest Residues to a Methane-Rich Gas in a High-Throughput Gasifier.* Columbus, Ohio: Battelle Columbus Laboratory.

Garrett, D. (1989). *Chemical Engineering Economics.* New York: Reinhold.

Gerhartz, W., ed. (1989). *Ullman's Encyclopedia of Industrial Chemistry.* Germany: VCH; Vols. A13, A17, A22.

Gregoire, C.E. (1992). *Technoeconomic Analysis of the Production of Biocrude from Wood.* Golden, CO. NREL Report TP-430-5435.

Kirk, R.; Othmer, D., eds. (1983). *Encyclopedia of Chemical Technology.* New York: Wiley & Sons; Vols. 12, 15, 19.

Larson, E.; Katofsky, R. (July 1992). *Production of Methanol and Hydrogen from Biomass.* PULCEES Report No. 271. Princeton University: Center for Energy and Environmental Studies.

Moe, J. (March 1962). "Design of Water-Gas Shift Reactors." *Chemical Engineering Progress*; Vol. 58, [3], pp. 33–36.

Ogden, J.; Dennis, E.; Steinbugler, M.; Strohbehn, J.W. (January 18, 1995). *Hydrogen Energy Systems Studies.* Princeton University: Center for Energy and Environmental Studies, Figure 5b.

Ogden, J.; Larson, E.; Delucchi, M. (May 27, 1994). *A Technical and Economic Assessment of Renewable Transportation Fuels and Technologies.* Princeton University: Center for Energy and Environmental Studies.

Peters, M.; Timmerhaus, K. (1980). *Plant Design and Economics for Chemical Engineers.* 3rd edition. New York: McGraw-Hill.

Peters, M.; Timmerhaus, K. (1991). *Plant Design and Economics for Chemical Engineers.* 4th edition. New York: McGraw-Hill.

Pikulik, A.; Diaz, H. (October 10, 1977). "Cost Estimating for Major Process Equipment." *Chemical Engineering*; Vol. 84, [21], pp. 106–122.

Schendel, R.L.; Mariz, C.L.; Mak, J.Y. (August 1983). *Hydrocarbon Processing*; Vol. 62, p. 58.

SRI International. (1994). *Chemical Economics Handbook.* Menlo Park, California.

Stultz, S.C.; Kitto, J.B. (1992). *Steam.* Barberton, Ohio: Babcock and Wilcox.

Sunggyu, L. (1990). *Methanol Synthesis Technology.* Boca Raton, Florida: CRC Press; pp. 4–22.

Supp, E. (1990). *How to Produce MeOH from Coal.* Germany: Springer-Verlag; pp. 44–93, 183–185.

Tindall, B.M.; King, D.L. (July 1991). "Designing Steam Reformers for Hydrogen Production." *Hydrocarbon Processing*; Vol. 73, [7], pp. 69–75.

Twigg, M., ed. (1989). *Catalyst Handbook.* Cleveland, Ohio: Wolfe Publishing; p. 87–89, 262.

Weenen, W.; Tielrooy, J. (February 1983). "Optimizing Hydrogen Plant Design." *Chemical Engineering Progress*; Vol. 79, [2], pp. 37–44.

Weyerhaeuser. (1992). Gasification Capital Cost Estimation. Obtained from Mark Paisley in personal correspondance, August, 1994. Battelle Columbus Laboratory.

Woods, D.R. (1975). *Financial Decision Making in the Process Industry.* New Jersey: Prentice Hall.

Appendix A: ASPEN Plus Input File
Gasifier Fortran Subroutine

Appendix A: ASPEN Plus Input File

```
DEF-STREAMS MIXCINC ALL

DIAGNOSTICS
   HISTORY SYS-LEVEL=4 SIM-LEVEL=4 PROP-LEVEL=2 STREAM-LEVEL=4
   MAX-PRINT SIM-LIMIT=5000 PROP-LIMIT=50

RUN-CONTROL MAX-ERRORS=500

DATABANKS PURECOMP / AQUEOUS / SOLIDS / INORGANIC / &
      ASPENPCD

PROP-SOURCES PURECOMP / AQUEOUS / SOLIDS / INORGANIC / &
      ASPENPCD .

;
;==============================================================================
;                          Components
;==============================================================================
;

COMPONENTS
   TAR C10H8 TAR /
   H2 H2 H2 /
   O2 O2 O2 /
   N2 N2 N2 /
   CO2 CO2 CO2 /
   CO CO CO /
   H2O H2O H2O /
   CH4 CH4 CH4 /
   H2S H2S H2S /
   NH3 H3N NH3 /
   COS COS COS /
   SO2 O2S SO2 /
   SO3 O3S SO3 /
   O2SI SIO2 O2SI /
   NO2 NO2 NO2 /
   NO NO NO /
   PHENOL C6H6O PHENOL /
   C6H6 C6H6 C6H6 /
   C2H6 C2H6 C2H6 /
   C2H4 C2H4 C2H4 /
   C2H2 C2H2 C2H2 /
   CARBON C CARBON /
   SULFUR S SULFUR /
   WOOD * WOOD /
   ASH * ASH /
   CHAR * CHAR
```

```
;
;==========================================================================
;                          Flowsheet
;==========================================================================
;

FLOWSHEET MAIN
   BLOCK FEEDMIX IN=GASIFSTM WOOD SAND OUT=GFEED
   BLOCK GASIFIER IN=GFEED OUT=WOODGAS QGAS
   BLOCK CHARSEP IN=WOODGAS OUT=CHAR SYNGAS
   BLOCK CHARDEC IN=CHAR OUT=CHARCOMP QCHAR
   BLOCK AIRHEAT IN=COMBAIR2 OUT=HCOMBAIR QAIR
   BLOCK CHARFURN IN=CHARCOMP HCOMBAIR SANDSUPP QCHAR OUT= &
      COMBPROD QCOMB
   BLOCK COMBSPLT IN=COMBPROD OUT=CHARFLUE ASHSAND
   BLOCK SANDSPLT IN=ASHSAND OUT=SAND SANDPURG
   BLOCK SYNCOMPR IN=TOCOMPR OUT=SYNCOMPD 205
   BLOCK PRIMARY IN=TOREFHOT REFSTM OUT=SYNREFRM 105
   BLOCK HTSHIFT IN=TOHT OUT=FROMHT QHT
   BLOCK LTSHIFT IN=TOLT OUT=FROMLT QLT
   BLOCK REFHTR IN=207 OUT=TOREFHOT 198
   BLOCK WATPUMP IN=REFSTMA OUT=REFSTMB
   BLOCK WOODSEP IN=ARWOOD OUT=WOODWAT MIDWOOD
   BLOCK DRY2 IN=MIDWOOD WETDAIR OUT=DRYWOOD
   BLOCK DRY1 IN=WOODWAT FLUENAIR OUT=WETDAIR
   BLOCK DRYRMIX IN=CHARFLUE DRYRAIR2 OUT=FLUENAIR
   BLOCK PSA IN=TOPSAB OUT=H2PURIFY OFFGAS
   BLOCK OFFCOMB IN=OFFGAS OFFAIR2 105 OUT=OFFFLUE1
   BLOCK GSTMGEN IN=SYNREFRM GSTMIN OUT=FROMPRIM GASIFSTM
   BLOCK AIRCOMP1 IN=COMBAIR OUT=COMBAIR2
   BLOCK AIRCOMP2 IN=DRYRAIR OUT=DRYRAIR2
   BLOCK DRYRSEP IN=DRYWOOD OUT=DRIED GASWAT
   BLOCK MODEL1 IN=HOTIN COLDIN OUT=HOTOUT COLDOUT
   BLOCK SYNCOOL1 IN=SYNGAS OUT=SYNCOLD 197
   BLOCK MODEL2 IN=HI CI OUT=HO CO
   BLOCK LTCOOL IN=FROMHT 196 OUT=TOLT STEAM6
   BLOCK OFFCOMPR IN=OFFAIR1 OUT=OFFAIR2
   BLOCK REFSTM IN=REFSTMB OUT=REFSTM 135
   BLOCK COMBCOOL IN=OFFFLUE1 135 OUT=OFFFLUE2
   BLOCK HTCOOL IN=FROMPRIM OUT=TOHT
   BLOCK PUMP1 IN=BFW1A OUT=145
   BLOCK INTER2A IN=GAS2A 160 OUT=COOLED2A STEAM2A
   BLOCK INTER2B IN=GAS2B 165 OUT=COOLED2B STEAM2B
   BLOCK PUMP4 IN=BFW2A OUT=160
   BLOCK PUMP5 IN=BFW2B OUT=165
   BLOCK RECMIX IN=TOPSAA H2RECYCL OUT=TOPSAB
   BLOCK RECSPLT IN=H2PURIFY OUT=H2PROD H2RECYCL
   BLOCK STMGEN6 IN=OFFFLUE2 188 OUT=OFFFLUE3 STEAM4
   BLOCK B13 IN=BFW4 OUT=188
   BLOCK B3 IN=BFW6 OUT=196
   BLOCK B1 IN=SYNCOLD OUT=KOWATER TOCOMPR
   BLOCK B2 IN=SYNCOMPD 208 205 OUT=207
   BLOCK B5 IN=KOWATER OUT=208
   BLOCK PSACOOL IN=FROMLT 212 OUT=TOPSAA STEAM5 189
```

```
   BLOCK B7 IN=BFW5 OUT=212
   BLOCK B4 IN=GAS1A OUT=COOLED1A 213
   BLOCK B6 IN=145 213 OUT=STMWAT
   BLOCK STMFLASH IN=STMWAT OUT=STEAM1A WAT1A

;
;==============================================================================
;                        Physical Property Data
;==============================================================================
;

PROPERTIES SYSOP3

PROP-REPLACE SYSOP3 RKS-BM
   PROP MUVMX MUVMX02
   PROP MULMX MULMX02
   PROP KVMX KVMX02
   PROP KLMX KLMX01
   PROP DV DV01
   PROP MUL MUL01
   PROP MUV MUV01
   PROP KV KV01
   PROP KL KL01

;

NC-COMPS WOOD ULTANAL SULFANAL PROXANAL

NC-PROPS WOOD ENTHALPY HCJ1BOIE / DENSITY DCOALIGT

NC-COMPS ASH GENANAL ULTANAL SULFANAL PROXANAL

NC-PROPS ASH ENTHALPY HCJ1BOIE / DENSITY DNSTYGEN

NC-COMPS CHAR ULTANAL SULFANAL PROXANAL

NC-PROPS CHAR ENTHALPY HCJ1BOIE / DENSITY DCHARIGT

PROP-DATA DATA1
   IN-UNITS ENG
   PROP-LIST DGSFRM / DHSFRM / MW
   PVAL O2SI .0 / .0 / 60.0860
   PVAL CARBON .0 / .0 / 12.0110
   PVAL SULFUR .0 / .0 / 32.0640

;
;==============================================================================
;                  Conventional Component Property Data
;==============================================================================
;

PROP-DATA DATA5
   IN-UNITS SI TEMPERATURE=F
   PROP-LIST VSPOLY
```

```
   PVAL CARBON .005340 .0 .0 .0 .0 .0 2500.0
   PVAL SULFUR .01550 .0 .0 .0 .0 .0 2500.0

PROP-DATA U-1
   IN-UNITS ENG MOLE-HEAT-CA='CAL/MOL-K' TEMPERATURE=K
   PROP-LIST CPSPO1
   PVAL CARBON 2.6730 .0026170 .0 .0 -116900.0 .0 273.0  &
      1373.0
   PVAL O2SI 12.80 .004470 .0 .0 -302000.0 .0 273.0 1973.0
   PVAL SULFUR 3.630 .00640 0.0 0.0 0.0 0.0 0.0 1000.000

PROP-DATA U-2
   IN-UNITS SI
   PROP-LIST DENGEN
   PVAL ASH 2000.0 .0 .0 .0

;
;==============================================================================
;                          Stream Structure
;==============================================================================
;

PROP-SET PS-1 CP RHO UNITS='BTU/LB-R' 'GM/CC' 'LB/CUFT'  &
      SUBSTREAM=MIXED COMPS=O2SI CARBON SULFUR PHASE=S

PROP-SET PS-2 DENSITY HEAT-CAP UNITS='LB/CUFT' 'GM/CC'  &
      'BTU/LB-R' 'CAL/GM-K' SUBSTREAM=NC COMPS=WOOD ASH CHAR  &
      PHASE=S

STREAM 207

STREAM ARWOOD
   SUBSTREAM MIXED TEMP=59 PRES=14.696
   MASS-FLOW H2O .78
   SUBSTREAM NC TEMP=59 PRES=14.696
   MASS-FLOW WOOD 1
   COMP-ATTR WOOD ULTANAL ( .920 50.880 6.04 .17 0 0.09  &
      41.9 )
   COMP-ATTR WOOD SULFANAL ( .450 .02250 .02250 )
   COMP-ATTR WOOD PROXANAL ( 11 15.29 83.52 .87 )

STREAM BFW1A
   SUBSTREAM MIXED TEMP=170 PRES=30
   MASS-FLOW H2O .8

STREAM BFW2A
   SUBSTREAM MIXED TEMP=59 PRES=30
   MASS-FLOW H2O .0565

STREAM BFW2B
   SUBSTREAM MIXED TEMP=59 PRES=30
   MASS-FLOW H2O .04825

STREAM BFW4
```

```
   SUBSTREAM MIXED TEMP=59 PRES=30
   MASS-FLOW H2O .378

STREAM BFW5
   SUBSTREAM MIXED TEMP=59 PRES=30
   MASS-FLOW H2O .75

STREAM BFW6
   SUBSTREAM MIXED TEMP=59 PRES=14.696
   MASS-FLOW H2O .2

STREAM CI
   SUBSTREAM MIXED TEMP=59 PRES=30
   MASS-FLOW H2O .570

STREAM COLDIN
   SUBSTREAM MIXED TEMP=228 PRES=530
   MASS-FLOW TAR .014 / H2 .012 / CO2 .16 / CO .327 /  &
      H2O .51 / CH4 .069 / H2S .001 / NH3 .002 / C2H6  &
      .004 / C2H4 .035 / C2H2 .003

;

STREAM COMBAIR
   SUBSTREAM MIXED TEMP=59.0 PRES=14.696 MASS-FLOW=1.80
   MOLE-FRAC O2 .207340 / N2 .782180 / CO2 .000330 / H2O  &
      .010150

STREAM DRYRAIR
   SUBSTREAM MIXED TEMP=59 PRES=14.696 MASS-FLOW=6
   MOLE-FRAC O2 .207340 / N2 .782180 / CO2 .000330 / H2O  &
      .010150.

STREAM GAS1A
   SUBSTREAM MIXED TEMP=397.8549 PRES=45.37759
   MASS-FLOW TAR .013804 / H2 .011585 / CO2 .160307 / CO  &
      0.327241 / H2O .50999 / CH4 .068728 / H2S .000781 /  &
      NH3 .001718 / C2H6 .003747 / C2H4 .035058 / C2H2  &
      .00254

STREAM GAS2A
   SUBSTREAM MIXED TEMP=414.9241 PRES=72.99842
   MASS-FLOW O2 .250564 / N2 .827514 / CO2 .000548 / H2O  &
      .006906

STREAM GAS2B
   SUBSTREAM MIXED TEMP=373.9805 PRES=162.6937
   MASS-FLOW O2 .250564 / N2 .827514 / CO2 .000548 / H2O  &
      .006906

;

STREAM GASIFSTM
   SUBSTREAM MIXED TEMP=1000 PRES=25
```

```
   MASS-FLOW H2O .4

STREAM GSTMIN
   SUBSTREAM MIXED TEMP=59 PRES=30
   MASS-FLOW H2O .4

STREAM HI
   SUBSTREAM MIXED TEMP=1736 PRES=362.6
   MASS-FLOW O2 .038 / N2 .99 / CO2 1.041 / H2O .227

STREAM HOTIN
   SUBSTREAM MIXED TEMP=1517.5 PRES=20
   MASS-FLOW TAR .014 / H2 .012 / CO2 .16 / CO .327 /  &
      H2O .51 / CH4 .069 / H2S .001 / NH3 .002 / C2H6  &
      .004 / C2H4 .035 / C2H2 .003

STREAM OFFAIR1
   SUBSTREAM MIXED TEMP=59 PRES=14.696 MASS-FLOW=5
   MOLE-FRAC O2 .207340 / N2 .782180 / CO2 .000330 / H2O  &
      .010150

STREAM OFFFLUE1
   SUBSTREAM MIXED TEMP=1915 PRES=362
   MASS-FLOW O2 .058983 / N2 1.197313 / CO2 1.040337 / CO  &
      .266843

STREAM REFSTMA
   SUBSTREAM MIXED TEMP=59 PRES=30
   MASS-FLOW H2O .544

;

STREAM SAND
   SUBSTREAM MIXED TEMP=1822.0 PRES=25.0
   MASS-FLOW H2O 1.000E-05
   SUBSTREAM CISOLID TEMP=1740.0 PRES=25.0
   MASS-FLOW O2SI 21.0
   SUBSTREAM NC TEMP=1740.0 PRES=25.0
   MASS-FLOW ASH .00780
   COMP-ATTR ASH GENANAL ( 100.0 0.0 0.0 0.0 0.0 0.0 0.0  &
      0.0 0.0 0.0 0.0 0.0 0.0 0.0 0.0 0.0 0.0 0.0 0.0  &
      0.0 )
   COMP-ATTR ASH ULTANAL ( 100.0 0.0 0. 0.0 0.0 0.0 0.0 )
   COMP-ATTR ASH SULFANAL ( 0.0 0.0 0.0 )
   COMP-ATTR ASH PROXANAL ( 0.0 0.0 0.0 100.0 )

;

STREAM SANDSUPP
   SUBSTREAM MIXED TEMP=59.0 PRES=20
   MASS-FLOW H2O 1.000E-05
   SUBSTREAM CISOLID TEMP=59.0 PRES=20
   MASS-FLOW O2SI .080
```

```
;
;==============================================================================
;                              Streams
;==============================================================================
;
;                CoalMisc (8476.0 0.0 0.0 0.0 0.0)

STREAM WOOD
   SUBSTREAM MIXED TEMP=155 PRES=25
   SUBSTREAM CISOLID TEMP=220 PRES=25
   MASS-FLOW CARBON 1.000E-05
   SUBSTREAM NC TEMP=220 PRES=25
   MASS-FLOW WOOD 1.0 / ASH 1.000E-05 / CHAR 1.000E-05
   COMP-ATTR WOOD ULTANAL ( .920 50.880 6.040 .170 .0 .090  &
      41.90 )
   COMP-ATTR WOOD SULFANAL ( .450 .02250 .02250 )
   COMP-ATTR WOOD PROXANAL ( 11.0 15.290 83.520 .870 )
   COMP-ATTR ASH GENANAL ( 100.0 .0 .0 .0 .0 .0 .0 .0  &
      .0 .0 .0 .0 .0 .0 .0 .0 .0 .0 .0 .0 )
   COMP-ATTR ASH ULTANAL ( 100.0 .0 .0 .0 .0 .0 .0 )
   COMP-ATTR ASH SULFANAL ( .0 .0 .0 )
   COMP-ATTR ASH PROXANAL ( .0 .0 .0 100.0 )
   COMP-ATTR CHAR ULTANAL ( .0 86.0 4.0 .0 .0 .030 9.970  &
      )
   COMP-ATTR CHAR SULFANAL ( .010 .010 .010 )
   COMP-ATTR CHAR PROXANAL ( .0 87.180 12.810 .010 )

DEF-STREAMS HEAT 105

DEF-STREAMS HEAT 135

DEF-STREAMS HEAT 197

DEF-STREAMS HEAT 198

DEF-STREAMS HEAT 213

DEF-STREAMS HEAT QAIR

DEF-STREAMS HEAT QCHAR

DEF-STREAMS HEAT QCOMB

DEF-STREAMS HEAT QGAS

DEF-STREAMS HEAT QHT

DEF-STREAMS HEAT QLT

BLOCK B2 MIXER
   PARAM PRES=530

BLOCK DRY1 MIXER
```

```
BLOCK DRY2 MIXER

BLOCK DRYRMIX MIXER

;

BLOCK FEEDMIX MIXER
   PARAM PRES=25

BLOCK RECMIX MIXER

BLOCK RECSPLT FSPLIT
   FRAC H2RECYCL .1

BLOCK SANDSPLT FSPLIT
   FRAC SANDPURG .0050

BLOCK B1 SEP
   FRAC STREAM=KOWATER SUBSTREAM=MIXED COMPS=TAR H2 O2 N2  &
      CO2 CO H2O CH4 H2S NH3 COS SO2 SO3 O2SI NO2 NO  &
      PHENOL C6H6 C2H6 C2H4 C2H2 CARBON SULFUR FRACS=0 0  &
      0 0 0 0 1 0 0 0 0 0 0 0 0 0 0 0 0 0 0 0 0 0
   FRAC STREAM=KOWATER SUBSTREAM=CISOLID COMPS=O2SI CARBON  &
      FRACS=0 0
   FRAC STREAM=KOWATER SUBSTREAM=NC COMPS=WOOD ASH CHAR  &
      FRACS=0 0 0

;

BLOCK CHARSEP SEP
   FRAC STREAM=CHAR SUBSTREAM=CISOLID COMPS=O2SI CARBON  &
      FRACS=1.0 1.0
   FRAC STREAM=CHAR SUBSTREAM=NC COMPS=WOOD ASH CHAR FRACS= &
      1.0 1.0 1.0
   FRAC STREAM=SYNGAS SUBSTREAM=MIXED COMPS=TAR H2 O2 N2  &
      CO2 CO H2O CH4 H2S NH3 COS SO2 SO3 O2SI NO2 NO  &
      PHENOL C6H6 C2H6 C2H4 C2H2 CARBON SULFUR FRACS=1.0  &
      1.0 1.0 1.0 1.0 1.0 1.0 1.0 1.0 1.0 1.0 1.0 1.0  &
      1.0 1.0 1.0 1.0 1.0 1.0 1.0 1.0 0.0 0.0

;

BLOCK COMBSPLT SEP
   FRAC STREAM=ASHSAND SUBSTREAM=MIXED COMPS=TAR H2 O2 N2  &
      CO2 CO H2O CH4 H2S NH3 COS SO2 SO3 O2SI NO2 NO  &
      PHENOL C6H6 C2H6 C2H4 C2H2 CARBON SULFUR FRACS=.0 .0  &
      .0 .0 .0 .0 .0 .0 .0 .0 .0 .0 1.0 .0 .0 .0  &
      .0 .0 .0 .0 .0 .0
   FRAC STREAM=ASHSAND SUBSTREAM=CISOLID COMPS=O2SI FRACS= &
      1.0
   FRAC STREAM=ASHSAND SUBSTREAM=NC COMPS=WOOD ASH CHAR  &
      FRACS=.0 1.0 .0

BLOCK DRYRSEP SEP
```

```
   FRAC STREAM=DRIED SUBSTREAM=MIXED COMPS=TAR H2 O2 N2  &
      CO2 CO H2O CH4 H2S NH3 COS SO2 SO3 O2SI NO2 NO  &
      PHENOL C6H6 C2H6 C2H4 C2H2 CARBON SULFUR FRACS=0 0  &
      0 0 0 0 0 0 0 0 0 0 0 0 0 0 0 0 0 0 0 0 0
   FRAC STREAM=DRIED SUBSTREAM=CISOLID COMPS=O2SI CARBON  &
      FRACS=0 0
   FRAC STREAM=DRIED SUBSTREAM=NC COMPS=WOOD ASH CHAR  &
      FRACS=1 0 0

BLOCK PSA SEP
   FRAC STREAM=H2PURIFY SUBSTREAM=MIXED COMPS=TAR H2 O2 N2  &
      CO2 CO H2O CH4 H2S NH3 COS SO2 SO3 O2SI NO2 NO  &
      PHENOL C6H6 C2H6 C2H4 C2H2 CARBON SULFUR FRACS=0 .85  &
      0 0 0 0 0 0 0 0 0 0 0 0 0 0 0 0 0 0 0 0 0
   FRAC STREAM=H2PURIFY SUBSTREAM=CISOLID COMPS=O2SI CARBON  &
      FRACS=0 0
   FRAC STREAM=H2PURIFY SUBSTREAM=NC COMPS=WOOD ASH CHAR  &
      FRACS=0 0 0

BLOCK WOODSEP SEP
   FRAC STREAM=WOODWAT SUBSTREAM=MIXED COMPS=TAR H2 O2 N2  &
      CO2 CO H2O CH4 H2S NH3 COS SO2 SO3 O2SI NO2 NO  &
      PHENOL C6H6 C2H6 C2H4 C2H2 CARBON SULFUR FRACS=1 1  &
      1 1 1 1 1 1 1 1 1 1 1 1 1 1 1 1 1 1 1 1 1
   FRAC STREAM=WOODWAT SUBSTREAM=CISOLID COMPS=O2SI CARBON  &
      FRACS=1 1
   FRAC STREAM=WOODWAT SUBSTREAM=NC COMPS=WOOD ASH CHAR  &
      FRACS=0 1 1

;

BLOCK AIRHEAT HEATER
   PARAM TEMP=60.0 PRES=0

BLOCK B4 HEATER
   PARAM TEMP=190 PRES=0

BLOCK B6 HEATER
   PARAM PRES=0

BLOCK COMBCOOL HEATER
   PARAM PRES=0

BLOCK HTCOOL HEATER
   PARAM TEMP=370 <C> PRES=0

BLOCK REFHTR HEATER
   PARAM TEMP=800 <C> PRES=0

BLOCK REFSTM HEATER
   PARAM TEMP=1000 PRES=0

BLOCK SYNCOOL1 HEATER
   PARAM TEMP=195 PRES=0
```

```
BLOCK STMFLASH FLASH2
   PARAM PRES=130 DUTY=0

BLOCK GSTMGEN HEATX
   PARAM T-COLD=1000 PRES-COLD=0
   FEEDS HOT=SYNREFRM COLD=GSTMIN
   PRODUCTS HOT=FROMPRIM COLD=GASIFSTM

BLOCK INTER2A HEATX
   PARAM T-HOT=150
   FEEDS HOT=GAS2A COLD=160
   PRODUCTS HOT=COOLED2A COLD=STEAM2A

BLOCK INTER2B HEATX
   PARAM T-HOT=150
   FEEDS HOT=GAS2B COLD=165
   PRODUCTS HOT=COOLED2B COLD=STEAM2B

BLOCK LTCOOL HEATX
   PARAM T-HOT=392
   FEEDS HOT=FROMHT COLD=196
   PRODUCTS HOT=TOLT COLD=STEAM6
   FLASH-SPECS TOLT FREE-WATER=YES MAXIT=100
   FLASH-SPECS STEAM6 MAXIT=100

;This block is used to model the syngas cooler prior to compression. Note
;that this block is really only representative of SYNCOOl1 and REFHTR;
;SYNCOOL2 is a separate cooler, modelled by MODEL2.

BLOCK MODEL1 HEATX
   PARAM T-HOT=1472
   FEEDS HOT=HOTIN COLD=COLDIN
   PRODUCTS HOT=HOTOUT COLD=COLDOUT

;This block models the heat exchanger which connects blocks SYNCOOL2
;DECANTHT. SYNCOOL1 is modeled by MODEL1.

BLOCK MODEL2 HEATX
   PARAM T-COLD=1000
   FEEDS HOT=HI COLD=CI
   PRODUCTS HOT=HO COLD=CO

BLOCK PSACOOL HEATX
   PARAM T-HOT=75
   FEEDS HOT=FROMLT COLD=212
   PRODUCTS HOT=TOPSAA COLD=STEAM5
   DECANT-STREA HOT=189
   FLASH-SPECS TOPSAA FREE-WATER=YES

BLOCK STMGEN6 HEATX
   PARAM T-HOT=82
   FEEDS HOT=OFFFLUE2 COLD=188
   PRODUCTS HOT=OFFFLUE3 COLD=STEAM4
```

```
;

BLOCK CHARFURN RSTOIC
   PARAM TEMP=1800.0 PRES=-1.0
   STOIC 1 MIXED H2 -1.0 / O2 -.50 / H2O 1.0
   STOIC 2 MIXED O2 -1.0 / CISOLID CARBON -1.0 / MIXED  &
      CO2 1.0
   STOIC 3 MIXED O2 -1.0 / CISOLID SULFUR -1.0 / MIXED  &
      SO2 1.0
   CONV 1 MIXED H2 1.0
   CONV 2 CISOLID CARBON 1.0
   CONV 3 CISOLID SULFUR 1.0

BLOCK HTSHIFT RSTOIC
   PARAM PRES=0 DUTY=0
   STOIC 1 MIXED TAR -1 / H2O -20 / CO2 10 / H2 24
   STOIC 2 MIXED CO -1 / H2O -1 / H2 1 / CO2 1
   CONV 1 MIXED TAR 1
   CONV 2 MIXED CO .7

BLOCK LTSHIFT RSTOIC
   PARAM PRES=0 DUTY=0
   STOIC 1 MIXED CO -1 / H2O -1 / H2 1 / CO2 1
   CONV 1 MIXED CO .75

;

BLOCK GASIFIER RYIELD
   SUBROUTINE YIELD=BATYD
   USER-VECS NREAL=6
   REAL VALUE-LIST=1500.0 360.0 6.60 8.30 .04650 4.0
   PARAM TEMP=1500.0 PRES=20
   BLOCK-OPTION SIM-LEVEL=4

BLOCK OFFCOMB RGIBBS
   PARAM PRES=0

BLOCK PRIMARY RGIBBS
   PARAM TEMP=850 <C> PRES=0 TAPP=-20

BLOCK B3 PUMP
   PARAM PRES=500

BLOCK B5 PUMP
   PARAM PRES=530

BLOCK B7 PUMP
   PARAM PRES=115

BLOCK B13 PUMP
   PARAM PRES=115

BLOCK PUMP1 PUMP
   PARAM PRES=180
```

```
BLOCK PUMP4 PUMP
   PARAM PRES=115

BLOCK PUMP5 PUMP
   PARAM PRES=115

BLOCK WATPUMP PUMP
   PARAM PRES=363

BLOCK AIRCOMP1 COMPR
   PARAM TYPE=POLYTROPIC PRES=20

BLOCK AIRCOMP2 COMPR
   PARAM TYPE=POLYTROPIC PRES=19 TEMP=59

BLOCK OFFCOMPR MCOMPR
   PARAM NSTAGE=4 TYPE=POLYTROPIC PRES=362.6
   FEEDS OFFAIR1 1
   PRODUCTS OFFAIR2 4
   COOLER-SPECS 1 TEMP=180 / 2 TEMP=150 / 3 TEMP=150 / 4  &
      TEMP=372.8

BLOCK SYNCOMPR MCOMPR
   PARAM NSTAGE=4 TYPE=POLYTROPIC PRES=530
   FEEDS TOCOMPR 1
   PRODUCTS SYNCOMPD 4 / 205 GLOBAL L
   COOLER-SPECS 1 TEMP=190 / 2 TEMP=190 / 3 TEMP=190 / 4  &
      TEMP=393.1852
   BLOCK-OPTION FREE-WATER=YES

;

BLOCK CHARDEC USER
   DESCRIPTION "CHAR IS DECOMPOSED INTO ITS ELEMENTS"
   SUBROUTINE USRDEC
   BLOCK-OPTION SIM-LEVEL=4

;
;==============================================================================
;                        Design Specifications
;==============================================================================
;

DESIGN-SPEC ADIABAT
   DEFINE GAST INFO-VAR INFO=HEAT VARIABLE=DUTY STREAM=QGAS
   SPEC "GAST" TO "0.D0"
   TOL-SPEC "5."
   VARY BLOCK-VAR BLOCK=GASIFIER VARIABLE=TEMP SENTENCE=PARAM
   LIMITS "1200." "2000."

DESIGN-SPEC AIRTOFLU
   DEFINE WOODT STREAM-VAR STREAM=DRYWOOD SUBSTREAM=MIXED  &
      VARIABLE=TEMP
   SPEC "WOODT" TO "155"
```

```
   TOL-SPEC "1.0"
   VARY STREAM-VAR STREAM=DRYRAIR SUBSTREAM=MIXED  &
      VARIABLE=MASS-FLOW
   LIMITS "12" "40"

DESIGN-SPEC RECYCLE
   DEFINE H2FRAC MOLE-FRAC STREAM=TOPSAB SUBSTREAM=MIXED  &
      COMPONENT=H2
   SPEC "H2FRAC" TO ".7"
   TOL-SPEC ".01"
   VARY BLOCK-VAR BLOCK=RECSPLT SENTENCE=FRAC VARIABLE=FRAC  &
      ID1=H2RECYCL
   LIMITS ".1" ".5"

;

DESIGN-SPEC SANDREC
   DEFINE QNONE INFO-VAR INFO=HEAT VARIABLE=DUTY STREAM=QCOMB
   SPEC "QNONE" TO "0.D0"
   TOL-SPEC "10."
   VARY STREAM-VAR STREAM=SANDSUPP SUBSTREAM=CISOLID  &
      VARIABLE=MASS-FLOW
   LIMITS "0.01" "40."

DESIGN-SPEC STMGEN6
   DEFINE STMT STREAM-VAR STREAM=STEAM5 SUBSTREAM=MIXED  &
      VARIABLE=TEMP
   SPEC "STMT" TO "360"
   TOL-SPEC "1"
   VARY STREAM-VAR STREAM=BFW5 SUBSTREAM=MIXED  &
      VARIABLE=MASS-FLOW
   LIMITS ".70" ".85"

DESIGN-SPEC STMGEN8
   DEFINE STMT STREAM-VAR STREAM=STEAM6 SUBSTREAM=MIXED  &
      VARIABLE=TEMP
   SPEC "STMT" TO "490"
   TOL-SPEC "1"
   VARY STREAM-VAR STREAM=BFW6 SUBSTREAM=MIXED  &
      VARIABLE=MASS-FLOW
   LIMITS ".2" ".3"

FORTRAN COMBAIRT
   DEFINE BLTEMP BLOCK-VAR BLOCK=AIRHEAT VARIABLE=TEMP  &
      SENTENCE=PARAM
   DEFINE STRTEM STREAM-VAR STREAM=COMBAIR2 SUBSTREAM=MIXED  &
      VARIABLE=TEMP
F     BLTEMP=STRTEM
   EXECUTE AFTER BLOCK AIRCOMP1

;

FORTRAN GASTEMP
   DEFINE TGAS BLOCK-VAR BLOCK=GASIFIER VARIABLE=TEMP  &
```

```
      SENTENCE=PARAM
   DEFINE TLIST BLOCK-VAR BLOCK=GASIFIER VARIABLE=VALUE-LIST  &
      SENTENCE=REAL ELEMENT=1
F    TLIST = TGAS
F    WRITE(NHSTRY,*) 'WRITE: TLIST = ',TLIST
F    WRITE(NHSTRY,*) 'WRITE: TGAS = ',TGAS
   READ-VARS TGAS
   WRITE-VARS TLIST

FORTRAN OFFAIR
   DEFINE H2 MOLE-FLOW STREAM=OFFGAS SUBSTREAM=MIXED  &
      COMPONENT=H2
   DEFINE CO MOLE-FLOW STREAM=OFFGAS SUBSTREAM=MIXED  &
      COMPONENT=CO
   DEFINE CH4 MOLE-FLOW STREAM=OFFGAS SUBSTREAM=MIXED  &
      COMPONENT=CH4
   DEFINE C2H6 MOLE-FLOW STREAM=OFFGAS SUBSTREAM=MIXED  &
      COMPONENT=C2H6
   DEFINE C2H4 MOLE-FLOW STREAM=OFFGAS SUBSTREAM=MIXED  &
      COMPONENT=C2H4
   DEFINE C2H2 MOLE-FLOW STREAM=OFFGAS SUBSTREAM=MIXED  &
      COMPONENT=C2H2
   DEFINE AIRFLO STREAM-VAR STREAM=OFFAIR1 SUBSTREAM=MIXED  &
      VARIABLE=MOLE-FLOW
   DEFINE O2FRAC MOLE-FRAC STREAM=OFFAIR1 SUBSTREAM=MIXED  &
      COMPONENT=O2
F    O2MOL=(.5*H2+.5*CO+2*CH4+3.5*C2H6+3*C2H4+2.5*C2H2)
F    AIRFLO=1.15*O2MOL/O2FRAC
   EXECUTE BEFORE BLOCK OFFCOMB

FORTRAN PRESDROP
   DEFINE P1 STREAM-VAR STREAM=SYNCOMPD SUBSTREAM=MIXED  &
      VARIABLE=PRES
   DEFINE HTPRES BLOCK-VAR BLOCK=HTSHIFT VARIABLE=PRES  &
      SENTENCE=PARAM
   DEFINE LTPRES BLOCK-VAR BLOCK=LTSHIFT VARIABLE=PRES  &
      SENTENCE=PARAM
   DEFINE PRIMP BLOCK-VAR BLOCK=PRIMARY VARIABLE=PRES  &
      SENTENCE=PARAM
F    PRIMP = 0.95 * P1
F    HTPRES = 0.85 * PRIMP
F    LTPRES = 0.85 * HTPRES
   EXECUTE AFTER BLOCK PRIMARY

FORTRAN REFSTM
   DEFINE STM MOLE-FLOW STREAM=REFSTMA SUBSTREAM=MIXED  &
      COMPONENT=H2O
   DEFINE TAR MOLE-FLOW STREAM=TOREFHOT SUBSTREAM=MIXED  &
      COMPONENT=TAR
   DEFINE CO MOLE-FLOW STREAM=TOREFHOT SUBSTREAM=MIXED  &
      COMPONENT=CO
   DEFINE CH4 MOLE-FLOW STREAM=TOREFHOT SUBSTREAM=MIXED  &
      COMPONENT=CH4
   DEFINE C2H6 MOLE-FLOW STREAM=TOREFHOT SUBSTREAM=MIXED  &
```

```
      COMPONENT=C2H6
   DEFINE C2H4 MOLE-FLOW STREAM=TOREFHOT SUBSTREAM=MIXED  &
      COMPONENT=C2H4
   DEFINE C2H2 MOLE-FLOW STREAM=TOREFHOT SUBSTREAM=MIXED  &
      COMPONENT=C2H2
   DEFINE EXIST MOLE-FLOW STREAM=TOREFHOT SUBSTREAM=MIXED  &
      COMPONENT=H2O
F    STM=3*(10*TAR+CO+1*CH4+2*C2H6+2*C2H4+2*C2H2)-EXIST
   EXECUTE BEFORE BLOCK PRIMARY

FORTRAN SETCSEP
   DEFINE TEMPIN STREAM-VAR STREAM=WOODGAS SUBSTREAM=MIXED  &
      VARIABLE=TEMP
   DEFINE TSEP BLOCK-VAR BLOCK=CHARSEP VARIABLE=TEMP  &
      SENTENCE=FLASH-SPECS ID1=CHAR
   DEFINE TSEPG BLOCK-VAR BLOCK=CHARSEP VARIABLE=TEMP  &
      SENTENCE=FLASH-SPECS ID1=SYNGAS
F    TSEP  = TEMPIN
F    TSEPG = TEMPIN
   READ-VARS TEMPIN
   WRITE-VARS TSEP TSEPG

;

FORTRAN STEAMAMT
   DEFINE STEAM MASS-FLOW STREAM=GASIFSTM SUBSTREAM=MIXED  &
      COMPONENT=H2O
   DEFINE WOOD MASS-FLOW STREAM=WOOD SUBSTREAM=NC  &
      COMPONENT=WOOD
F    STEAM = 0.4 * WOOD
   READ-VARS WOOD
   WRITE-VARS STEAM

FORTRAN WOODDRY
   DEFINE REALNC STREAM-VAR STREAM=WOOD SUBSTREAM=NC  &
      VARIABLE=MASS-FLOW
   DEFINE REALMI STREAM-VAR STREAM=WOOD SUBSTREAM=MIXED  &
      VARIABLE=MASS-FLOW
   DEFINE REALCI STREAM-VAR STREAM=WOOD SUBSTREAM=CISOLID  &
      VARIABLE=MASS-FLOW
   DEFINE NEWNC STREAM-VAR STREAM=ARWOOD SUBSTREAM=NC  &
      VARIABLE=MASS-FLOW
   DEFINE NEWMIX STREAM-VAR STREAM=ARWOOD SUBSTREAM=MIXED  &
      VARIABLE=MASS-FLOW
   DEFINE NEWCI STREAM-VAR STREAM=ARWOOD SUBSTREAM=CISOLID  &
      VARIABLE=MASS-FLOW
   DEFINE NEWH2O MASS-FLOW STREAM=ARWOOD SUBSTREAM=MIXED  &
      COMPONENT=H2O
F    NEWNC = REALNC
F    NEWH2O = 0.78 * REALNC
F    NEWMIX = REALMI + NEWH2O
F    NEWCI = REALCI
   EXECUTE BEFORE BLOCK WOODSEP
```

```
;

FORTRAN XSAIR
   DEFINE PCARB MOLE-FLOW STREAM=CHARCOMP SUBSTREAM=CISOLID  &
      COMPONENT=CARBON
   DEFINE PHYDRO MOLE-FLOW STREAM=CHARCOMP SUBSTREAM=MIXED  &
      COMPONENT=H2
   DEFINE PSULF MOLE-FLOW STREAM=CHARCOMP SUBSTREAM=CISOLID  &
      COMPONENT=SULFUR
   DEFINE AIRFLO STREAM-VAR STREAM=COMBAIR SUBSTREAM=MIXED  &
      VARIABLE=MOLE-FLOW
   DEFINE O2FRAC MOLE-FRAC STREAM=COMBAIR SUBSTREAM=MIXED  &
      COMPONENT=O2
F     O2MOL = PCARB + 0.5*PHYDRO + PSULF
F     AIRFLO = 1.2 * O2MOL / O2FRAC
   READ-VARS PCARB PHYDRO PSULF O2FRAC
   WRITE-VARS AIRFLO

CONV-OPTIONS
   PARAM CHECKSEQ=NO

CONVERGENCE C-GASSTM WEGSTEIN
   TEAR GASIFSTM

CONVERGENCE C-H2REC WEGSTEIN
   TEAR H2RECYCL

CONVERGENCE C-SAND WEGSTEIN
   TEAR SAND .0010
   PARAM MAXIT=50 QMIN=-5.0

CONVERGENCE MIXTEAR WEGSTEIN
   TEAR 207

CONVERGENCE C-AIRFLU SECANT
   SPEC AIRTOFLU

;

CONVERGENCE C-QGAS SECANT
   SPEC ADIABAT

CONVERGENCE C-SANDR SECANT
   SPEC SANDREC

CONVERGENCE H2SPLT SECANT
   SPEC RECYCLE

CONVERGENCE STMGEN6 SECANT
   SPEC STMGEN6

CONVERGENCE STMGEN8 SECANT
   SPEC STMGEN8
```

Appendix B: Economic Analysis Cost Sheets

Appendix B: Cost Sheets

General Equipment Sizes and Costs
Scheme 1

Capital investment and operating costs at bottom of spreadsheet

Pumps and Compressors

WATPUMP

Wood feed bone dry tpd	Wood feed dried lb/hr	H2 produced scfd	power hp	flowrate ft3/hr	flowrate gal/min	delta P psi	cost 1994$
0.01068	1	271	0.001	0.012	0.00	333	
30	2,809	762,584	2.763	33.7	4.21	333	$2,900
300	28,090	7,625,843	27.633	337.4	42.06	333	$8,100
1000	93,633	25,419,476	92.111	1124.5	140.20	333	$14,800

B5 (syncompr water pump)

Wood feed bone dry tpd	Wood feed dried lb/hr	H2 produced scfd	power hp	flowrate ft3/hr	flowrate gal/min	delta P psi	cost 1994$
0.01068	1	271	0.001	0.011	0.00	510	
30	2,809	762,584	4.018	32.0	3.99	510	$3,240
300	28,090	7,625,843	40.180	320.3	39.93	510	$9,720
1000	93,633	25,419,476	133.933	1067.6	133.10	510	$25,160

B3 (itcool water pump)

Wood feed bone dry tpd	Wood feed dried lb/hr	H2 produced scfd	power hp	flowrate ft3/hr	flowrate gal/min	delta P psi	cost 1994$
0.01068	1	271	0.001	0.006	0.00	485.304	
30	2,809	762,584	2.004	16.8	2.09	485.304	$2,590
300	28,090	7,625,843	20.045	167.9	20.93	485.304	$6,480
1000	93,633	25,419,476	66.816	559.7	69.78	485.304	$12,580

B7 (psacool water pump)

Wood feed bone dry tpd	Wood feed dried lb/hr	H2 produced scfd	power hp	flowrate ft3/hr	flowrate gal/min	delta P psi	cost 1994$
0.01068	1	271	0.000	0.016	0.00	85	
30	2,809	762,584	1.076	45.4	5.67	85	$1,800
300	28,090	7,625,843	10.758	454.5	56.66	85	$3,200
1000	93,633	25,419,476	35.861	1515.0	188.88	85	$5,400

B13 (stmgen6 water pump)

Wood feed bone dry tpd	Wood feed dried lb/hr	H2 produced scfd	power hp	flowrate ft3/hr	flowrate gal/min	delta P psi	cost 1994$
0.01068	1	271	0.001	0.008	0.00	310	
30	2,809	762,584	1.683	22.1	2.75	310	$2,400
300	28,090	7,625,843	16.826	220.7	27.51	310	$5,670
1000	93,633	25,419,476	56.088	735.5	91.70	310	$11,340

pump1

Wood feed bone dry tpd	Wood feed dried lb/hr	H2 produced scfd	power hp	flowrate ft3/hr	flowrate gal/min	delta P psi	cost 1994$
0.01068	1	271	0.001	0.018	0.00	150	
30	2,809	762,584	1.831	49.6	6.19	150	$2,000
300	28,090	7,625,843	18.307	496.2	61.86	150	$4,200
1000	93,633	25,419,476	61.023	1653.8	206.19	150	$7,500

pump2

Wood feed bone dry tpd	Wood feed dried lb/hr	H2 produced scfd	power hp	flowrate ft3/hr	flowrate gal/min	delta P psi	cost 1994$
0.01068	1	271	0.001	0.018	0.00	150	
30	2,809	762,584	1.831	49.6	6.19	150	$2,000
300	28,090	7,625,843	18.307	496.2	61.86	150	$4,200
1000	93,633	25,419,476	61.023	1653.8	206.19	150	$7,500

pump3

Wood feed bone dry tpd	Wood feed dried lb/hr	H2 produced scfd	power hp	flowrate ft3/hr	flowrate gal/min	delta P psi	cost 1994$
0.01068	1	271	0.001	0.018	0.00	150	
30	2,809	762,584	1.831	49.6	6.19	150	$2,000
300	28,090	7,625,843	18.307	496.2	61.86	150	$4,200
1000	93,633	25,419,476	61.023	1653.8	206.19	150	$7,500

pump4

Wood feed bone dry tpd	Wood feed dried lb/hr	H2 produced scfd	power hp	flowrate ft3/hr	flowrate gal/min	delta P psi	cost 1994$
0.01068	1	271	2.49E-05	0.001	0.00	85	
30	2,809	762,584	0.070	3.3	0.42	85	$1,500
300	28,090	7,625,843	0.699	33.4	4.17	85	$1,700
1000	93,633	25,419,476	2.330	111.4	13.89	85	$2,300

pump5

Wood feed bone dry tpd	Wood feed dried lb/hr	H2 produced scfd	power hp	flowrate ft3/hr	flowrate gal/min	delta P psi	cost 1994$
0.01068	1	271	0.000	0.001	0.00	85	
30	2,809	762,584	0.060	2.9	0.36	85	$1,500
300	28,090	7,625,843	0.597	28.5	3.56	85	$1,700
1000	93,633	25,419,476	1.989	95.1	11.86	85	$2,200

OFFCOMPR

			first stage		second stage		third stage		fourth stage		
Wood feed bone dry tpd	Wood feed dried lb/hr	H2 produced scfd	power hp	cost 1994$	power hp	cost 1994$	power hp	cost 1994$	power hp	cost 1994$	**total cost**
0.01068	1	271	0.024		0.02949		0.0281		0.0281		
30	2,809	762,584	67.2	$79,100	82.8	$92,600	78.9	$89,300	78.9	$89,300	**$350,300**
300	28,090	7,625,843	671.6	$422,000	828.4	$494,000	789.3	$476,400	789.3	$476,400	**$1,868,800**
1000	93,633	25,419,476	2238.8	$1,042,600	2761.2	$1,220,500	2631.1	$1,177,000	2631.1	$1,177,000	**$4,617,100**

SYNCOMPR

			first stage		**second stage**		**third stage**		**fourth stage**		
Wood feed bone dry tpd	Wood feed dried lb/hr	H2 produced scfd	power hp	cost 1994$	power hp	cost 1994$	power hp	cost 1994$	power hp	cost 1994$	**total cost 1994$**
0.01068	1	271	0.01814000		0.018		0.01797		0.01793		
30	2,809	762,584	51.0	$64,300	50.6	63900.0	50.5	$63,800	50.4	$63,700	**$255,700**
300	28,090	7,625,843	509.6	$342,900	505.6	340900.0	504.8	$340,500	503.7	$340,000	**$1,364,300**
1000	93,633	25,419,476	1698.5	$847,200	1685.4	832200.0	1682.6	$841,300	1678.8	$839,800	**$3,360,500**

Heat Exchangers and Heaters

GSTMGEN

Wood feed bone dry tpd	Wood feed dried lb/hr	H2 produced scfd	duty Btu/hr	delta Tlm °F	Avg U Btu/hr/sqft	area sqft	cost 1994$
0.01068	1	271	632.9	679.2815	192.0261	0.0049	
30	2,809	762,584	1.78E+06	679.2815	192.0261	13.6	$1,200
300	28,090	7,625,843	1.78E+07	679.2815	192.0261	136.3	$7,100
1000	93,633	25,419,476	5.93E+07	679.2815	192.0261	454.3	$13,000

LTCOOL

Wood feed bone dry tpd	Wood feed dried lb/hr	H2 produced scfd	duty Btu/hr	delta Tlm °F	Avg U Btu/hr/sqft	area sqft	cost 1994$
0.01068	1	271	365.5	326.6936	85.7387	0.0	
30	2,809	762,584	1.03E+06	326.6936	85.7387	36.7	$1,300
300	28,090	7,625,843	1.03E+07	326.6936	85.7387	366.5	$11,300
1000	93,633	25,419,476	3.42E+07	326.6936	85.7387	1221.8	$26,600

PSACOOL

Wood feed bone dry tpd	Wood feed dried lb/hr	H2 produced scfd	duty Btu/hr	delta Tlm °F	Avg U Btu/hr/sqft	area sqft	cost 1994$
0.01068	1	271	967.7	120	85	0.1	
30	2,809	762,584	2.72E+06	120	85	266.5	$9,300
300	28,090	7,625,843	2.72E+07	120	85	2665.0	$51,600
1000	93,633	25,419,476	9.06E+07	120	85	8883.2	$167,800

STMGEN6

Wood feed bone dry tpd	Wood feed dried lb/hr	H2 produced scfd	duty Btu/hr	delta Tlm °F	Avg U Btu/hr/sqft	area sqft	cost 1994$
0.01068	1	271	485.3	38.57	149.67	0.1	
30	2,809	762,584	1.36E+06	38.57	149.67	236.1	$8,700
300	28,090	7,625,843	1.36E+07	38.57	149.67	2361.4	$46,300
1000	93,633	25,419,476	4.54E+07	38.57	149.67	7871.4	$147,700

SYNCOOL1 / REFHTR (MODEL1)

Wood feed bone dry tpd	Wood feed dried lb/hr	H2 produced scfd	duty Btu/hr	delta Tlm °F	Avg U Btu/hr/sqft	area sqft	cost 1994$
0.01068	1	271	27.1	1256.2968	149.6937	0.0	
30	2,809	762,584	7.61E+04	1256.2968	149.6937	0.4	$1,000
300	28,090	7,625,843	7.61E+05	1256.2968	149.6937	4.0	$1,100
1000	93,633	25,419,476	2.54E+06	1256.2968	149.6937	13.5	$1,200

REFSTM / COMBCOOL (MODEL2)

			heatx1				
Wood feed bone dry tpd	Wood feed dried lb/hr	H2 produced scfd	duty Btu/hr	delta Tlm °F	Avg U Btu/hr/sqft	area sqft	cost 1994$
0.01068	1	271	901.8	537.7543	186.5534	0.0090	
30	2,809	762,584	2.53E+06	537.7543	186.5534	25.3	$1,300
300	28,090	7,625,843	2.53E+07	537.7543	186.5534	252.5	$9,000
1000	93,633	25,419,476	8.44E+07	537.7543	186.5534	841.7	$20,000

SYNCOMPR INTERSTAGE COOLERS

INTER1A FLASH DRUM

Wood feed bone dry tpd	Wood feed dried lb/hr	H2 produced scfd	heatx1 duty Btu/hr	delta Tlm °F	Avg U Btu/hr/sqft	area sqft	cost 1994$
0.01068	1	271	510	28.8	149.6937	0.1183	
30	2,809	762,584	1.43E+06	28.8	149.6937	332.3	$11,100
300	28,090	7,625,843	1.43E+07	28.8	149.6937	3323.0	$63,100
1000	93,633	25,419,476	4.78E+07	28.8	149.6937	11,076.51	$206,400

****cost of two identical heat exchangers

INTER1B FLASH DRUM

Wood feed bone dry tpd	Wood feed dried lb/hr	H2 produced scfd	heatx1 duty Btu/hr	delta Tlm °F	Avg U Btu/hr/sqft	area sqft	cost 1994$
0.01068	1	271	510	28.8	149.6937	0.1183	
30	2,809	762,584	1.43E+06	28.8	149.6937	332.3	$11,100
300	28,090	7,625,843	1.43E+07	28.8	149.6937	3323.0	$63,100
1000	93,633	25,419,476	4.78E+07	28.8	149.6937	11076.5	$206,400

****cost of two identical heat exchangers

INTER1C FLASH DRUM

Wood feed bone dry tpd	Wood feed dried lb/hr	H2 produced scfd	heatx1 duty Btu/hr	delta Tlm °F	Avg U Btu/hr/sqft	area sqft	cost 1994$
0.01068	1	271	510	28.8	149.6937	0.1183	
30	2,809	762,584	1.43E+06	28.8	149.6937	332.3	$11,100
300	28,090	7,625,843	1.43E+07	28.8	149.6937	3323.0	$63,100
1000	93,633	25,419,476	4.78E+07	28.8	149.6937	11076.5	$206,400

****cost of two identical heat exchangers

OFFCOMPR INTERSTAGE COOLERS

INTER2A

Wood feed bone dry tpd	Wood feed dried lb/hr	H2 produced scfd	duty Btu/hr	delta Tlm °F	Avg U Btu/hr/sqft	area sqft	cost 1994$
0.01068	1	271	71	75.9471	19.3917	0.0482	
30	2,809	762,584	1.99E+05	75.9471	19.3917	135.4	$6,700
300	28,090	7,625,843	1.99E+06	75.9471	19.3917	1354.2	$28,900
1000	93,633	25,419,476	6.65E+06	75.9471	19.3917	4514.0	$84,400

INTER2B

Wood feed bone dry tpd	Wood feed dried lb/hr	H2 produced scfd	duty Btu/hr	delta Tlm °F	Avg U Btu/hr/sqft	area sqft	cost 1994$
0.01068	1	271	60.3	58.4995	14.4888	0.0711	
30	2,809	762,584	1.69E+05	58.4995	14.4888	199.8	$8,200
300	28,090	7,625,843	1.69E+06	58.4995	14.4888	1998.4	$40,000
1000	93,633	25,419,476	5.65E+06	58.4995	14.4888	6661.3	$124,300

REACTORS

HTSHIFT

SV (1/hr) = 4000
height/diameter 2

Wood feed bone dry tpd	Wood feed dried lb/hr	H2 produced scfd	flowrate acfh*	reactor volume ft3	diameter ft	height ft	pressure psi	cost 1994$ SS316
0.01068	1	271	3.13	0.0008	0.08	0.16	504	
30	2,809	762,584	8,804	2.20	1.12	2.24	504	$6,700
300	28,090	7,625,843	88,039	22.01	2.41	4.82	504	$26,700
1000	93,633	25,419,476	293,464	73.37	3.60	7.20	504	$56,200

LTSHIFT

SV (1/hr) = 4000
height/diameter 2

Wood feed bone dry tpd	Wood feed dried lb/hr	H2 produced scfd	flowrate acfh*	reactor volume ft3	diameter ft	height ft	pressure psi	cost 1994$ SS316
0.01068	1	271	2.54	0.0006	0.07	0.15	427	
30	2,809	762,584	7,122	1.78	1.04	2.09	427	$5,900
300	28,090	7,625,843	71,219	17.80	2.25	4.49	427	$23,500
1000	93,633	25,419,476	237,397	59.35	3.36	6.71	427	$49,400

* acfh = actual cubic feet per hour

PRIMARY REFORMER

Wood feed bone dry tpd	Wood feed dried lb/hr	H2 produced scfd	Heat duty MMBtu/hr	Chem Cost 1994$	P&T, 3rd ed 1994$	Chem Eng, Oct 10, 1977 1994$	avg
0.01068	1	271	5.56E-04				
30	2,809	762,584	1.562	$53,600			$53,600
300	28,090	7,625,843	15.620	$328,600	$329,500	$335,800	$331,300
1000	93,633	25,419,476	52.067	$878,200	$915,200	$987,400	$926,933

Separation System

PSA SYSTEM

installed cost of PSA for 4.05 MMSCFD	$1,025,000
$/SCFD	0.253

Wood feed bone dry tpd	Wood feed dried lb/hr	H2 produced scfd	cost $
0.01068	1	271	
30	2,809	762,584	$193,000
300	28,090	7,625,843	$1,929,997
1000	93,633	25,419,476	$6,433,324

Gasification (installed)

cost of a 2200 bone dry ton/day gasifcation plant: $12,440,143

Wood feed bone dry tpd	Wood feed dried lb/hr	H2 produced scfd	gasifier plant cost 1994 K$
0.01068	1	271	
30	2,809	762,584	$615,339
300	28,090	7,625,843	$3,084,000
1000	93,633	25,419,476	$7,163,570

Capital Requirements

Capital expense	% of purchased equipment cost
instrumentation	18%
piping	66%
electrical	11%
buildings	18%
yard improvements	10%
service facilities	70%
land	6%
engineering and construction	74%
contingencies	42%

Equipment capital

Wood feed bone dry tpd	Wood feed dried lb/hr	H2 produced scfd	uninstalled capital	installation cost	other equipment installed	total equipment cost 1994$	total uninstalled capital
30	2,809	762,584	$765,130	$359,611	$808,339	$1,933,080	$1,315,020
300	28,090	7,625,843	$4,048,370	$1,902,734	$5,013,997	$10,965,101	$7,459,252
1000	93,633	25,419,476	$10,310,613	$4,845,988	$13,596,894	$28,753,495	$19,560,201

Other fixed capital investment

Wood feed bone dry tpd	Wood feed dried lb/hr	H2 produced scfd	instrumentation	piping	electrical	buildings	yard	service facilities	land	engineering	contingencies	total related fixed capital
30	2,809	762,584	$236,704	$867,913	$144,652	$236,704	$131,502	$920,514	$78,901	$973,115	$552,308	$4,142,314
300	28,090	7,625,843	$1,342,665	$4,923,107	$820,518	$1,342,665	$745,925	$5,221,477	$447,555	$5,519,847	$3,132,886	$23,496,645
1000	93,633	25,419,476	$3,520,836	$12,909,733	$2,151,622	$3,520,836	$1,956,020	$13,692,141	$1,173,612	$14,474,549	$8,215,284	$61,614,633

Total fixed capital investment

Wood feed bone dry tpd	Wood feed dried lb/hr	H2 produced scfd	fixed capital
30	2,809	762,584	$6,075,393
300	28,090	7,625,843	$34,461,747
1000	93,633	25,419,476	$90,368,129

Working capital 18% of the capital expenditures estimated so far.

Wood feed bone dry tpd	Wood feed dried lb/hr	H2 produced scfd	working capital
30	2,809	762,584	$1,093,571
300	28,090	7,625,843	$6,203,114
1000	93,633	25,419,476	$16,266,263

Operating costs

electricity cost	0.05	$/kWh
on-line factor	0.9	

Electricity

Wood feed bone dry tpd	Wood feed dried lb/hr	H2 produced scfd	power requireme hp	cost $/yr
0.01068	1	271	0.188	
30	2,809	762,584	527.391	$155,044
300	28,090	7,625,843	5273.907	$1,550,440
1000	93,633	25,419,476	17579.690	$5,168,134

Water

for gasification	0.45	lb/lb bdw
for reforming	0.64	lb/lb bdw
for steam generation	2.97	lb/lb bdw
BFW cost	$0.33	$/1000 liters

Wood feed bone dry tpd	Wood feed dried lb/hr	H2 produced scfd	for gasification 1000 liters/year	for reforming 1000 liters/year	for steam generatio 1000 liters/year	total BFW 1000 liters/year	cost $/yr
30	2,809	762,584	2.01	2.86	13.29	18.16	5.99
300	28,090	7,625,843	20.09	28.63	132.89	181.61	59.93
1000	93,633	25,419,476	66.95	95.43	442.97	605.35	199.77

Operating costs of PSA

Wood feed bone dry tpd	Wood feed dried lb/hr	H2 produced scfd	op cost $/1000 SCF	cost $/yr
30	2,809	762,584	$6.50	$4,957
300	28,090	7,625,843	$6.50	$49,568
1000	93,633	25,419,476	$6.50	$165,227

Labor

Wood feed bone dry tpd	Wood feed dried lb/hr	H2 produced scfd	personnel and their cost per year: operators	formen	supervisors	total labor cost $/yr
			$28,700	$30,500	$39,300	
30	2,809	762,584	3	1	1	$155,900
300	28,090	7,625,843	6	2	1	$272,500
1000	93,633	25,419,476	8	2	1	$329,900

Byproduct credit: steam

500 psig steam		
stream steam6	0.2838	lb/lb dried wood
total	0.2838	

Wood feed bone dry tpd	Wood feed dried lb/hr	H2 produced scfd	steam produced lb/hr	steam produced 1000 kg/year	selling price $/1000 kg	yearly revenue $
30	2,809	762,584	797	3,167.62	$7.88	$24,960.83
300	28,090	7,625,843	7,972	31,676.18	$7.88	$249,608.27
1000	93,633	25,419,476	26,573	105,587.26	$7.88	$832,027.57

100 psig steam		
streams steam1a, 1b,	1.125	lb/lb dried wood
stream steam2a	0.056	lb/lb dried wood
stream steam2b	0.048	lb/lb dried wood
stream steam4	0.378	lb/lb dried wood
stream steam5	0.754	lb/lb dried wood
total	2.36205	lb/lb dried wood

Wood feed bone dry tpd	Wood feed dried lb/hr	H2 produced scfd	steam produced lb/hr	steam produced 1000 kg/year	selling price $/1000 kg	yearly revenue $
30	2,809	762,584	6,635	26,363.87	$5.18	$136,564.82
300	28,090	7,625,843	66,350	263,638.65	$5.18	$1,365,648.22
1000	93,633	25,419,476	221,166	878,795.51	$5.18	$4,552,160.74

Appendix B: Cost sheets
Scheme 1

General Equipment Sizes and Costs

Scheme 2: primary reformer only; no shift converters

Capital investment and operating costs at bottom of spreadsheet
change only those values in blue; others are calculated or imported from somewhere else.

Pumps and Compressors

WATPUMP

Wood feed bone dry tpd	Wood feed dried lb/hr	H2 produced scfd	power hp	flowrate ft3/hr	flowrate gal/min	delta P psi	cost 1994$
0.01068	1	212	0.001	0.012	0.00	333	
30	2,809	595,028	2.763	33.7	4.21	333	$2,900
300	28,090	5,950,281	27.633	337.4	42.06	333	$8,100
1000	93,633	19,834,270	92.111	1124.5	140.20	333	$14,800

B5 (syncompr water pump)

Wood feed bone dry tpd	Wood feed dried lb/hr	H2 produced scfd	power hp	flowrate ft3/hr	flowrate gal/min	delta P psi	cost 1994$
0.01068	1	212	0.001	0.011	0.00	510	
30	2,809	595,028	4.018	32.0	3.99	510	$3,240
300	28,090	5,950,281	40.180	320.3	39.93	510	$9,720
1000	93,633	19,834,270	133.933	1067.6	133.10	510	$25,160

B3 (ltcool water pump)

Wood feed bone dry tpd	Wood feed dried lb/hr	H2 produced scfd	power hp	flowrate ft3/hr	flowrate gal/min	delta P psi	cost 1994$
0.01068	1	212	0.001	0.006	0.00	485.304	
30	2,809	595,028	2.004	16.8	2.09	485.304	$2,590
300	28,090	5,950,281	20.045	167.9	20.93	485.304	$6,480
1000	93,633	19,834,270	66.816	559.7	69.78	485.304	$12,580

B7 (psacool water pump)

Wood feed bone dry tpd	Wood feed dried lb/hr	H2 produced scfd	power hp	flowrate ft3/hr	flowrate gal/min	delta P psi	cost 1994$
0.01068	1	212	0.000	0.016	0.00	85	
30	2,809	595,028	1.076	45.4	5.67	85	$1,800
300	28,090	5,950,281	10.758	454.5	56.66	85	$3,200
1000	93,633	19,834,270	35.861	1515.0	188.88	85	$5,400

B13 (stmgen6 water pump)

Wood feed bone dry tpd	Wood feed dried lb/hr	H2 produced scfd	power hp	flowrate ft3/hr	flowrate gal/min	delta P psi	cost 1994$
0.01068	1	212	0.001	0.008	0.00	310	
30	2,809	595,028	1.683	22.1	2.75	310	$2,400
300	28,090	5,950,281	16.826	220.7	27.51	310	$5,670
1000	93,633	19,834,270	56.088	735.5	91.70	310	$11,340

pump1

Wood feed bone dry tpd	Wood feed dried lb/hr	H2 produced scfd	power hp	flowrate ft3/hr	flowrate gal/min	delta P psi	cost 1994$
0.01068	1	212	0.001	0.018	0.00	150	
30	2,809	595,028	1.831	49.6	6.19	150	$2,000
300	28,090	5,950,281	18.307	496.2	61.86	150	$4,200
1000	93,633	19,834,270	61.023	1653.8	206.19	150	$7,500

pump2

Wood feed bone dry tpd	Wood feed dried lb/hr	H2 produced scfd	power hp	flowrate ft3/hr	flowrate gal/min	delta P psi	cost 1994$
0.01068	1	212	0.001	0.018	0.00	150	
30	2,809	595,028	1.831	49.6	6.19	150	$2,000
300	28,090	5,950,281	18.307	496.2	61.86	150	$4,200
1000	93,633	19,834,270	61.023	1653.8	206.19	150	$7,500

pump3

Wood feed bone dry tpd	Wood feed dried lb/hr	H2 produced scfd	power hp	flowrate ft3/hr	flowrate gal/min	delta P psi	cost 1994$
0.01068	1	212	0.001	0.018	0.00	150	
30	2,809	595,028	1.831	49.6	6.19	150	$2,000
300	28,090	5,950,281	18.307	496.2	61.86	150	$4,200
1000	93,633	19,834,270	61.023	1653.8	206.19	150	$7,500

pump4

Wood feed bone dry tpd	Wood feed dried lb/hr	H2 produced scfd	power hp	flowrate ft3/hr	flowrate gal/min	delta P psi	cost 1994$
0.01068	1	212	2.49E-05	0.001	0.00	85	
30	2,809	595,028	0.070	3.3	0.42	85	$1,500
300	28,090	5,950,281	0.699	33.4	4.17	85	$1,700
1000	93,633	19,834,270	2.330	111.4	13.89	85	$2,300

pump5

Wood feed bone dry tpd	Wood feed dried lb/hr	H2 produced scfd	power hp	flowrate ft3/hr	flowrate gal/min	delta P psi	cost 1994$
0.01068	1	212	0.000	0.001	0.00	85	
30	2,809	595,028	0.060	2.9	0.36	85	$1,500
300	28,090	5,950,281	0.597	28.5	3.56	85	$1,700
1000	93,633	19,834,270	1.989	95.1	11.86	85	$2,200

OFFCOMPR

			first stage		second stage		third stage		fourth stage		
Wood feed bone dry tpd	Wood feed dried lb/hr	H2 produced scfd	power hp	cost 1994$	power hp	cost 1994$	power hp	cost 1994$	power hp	cost 1994$	**total cost**
0.01068	1	212	0.018		0.02213		0.02109		0.02109		
30	2,809	595,028	50.4	$60,300	62.2	$70,600	59.2	$68,100	59.2	$6,810	**$205,810**
300	28,090	5,950,281	503.9	$340,100	621.6	$398,100	592.4	$384,000	592.4	$384,000	**$1,506,200**
1000	93,633	19,834,270	1679.8	$840,200	2072.1	$987,700	1974.7	$948,800	1974.7	$948,800	**$3,725,500**

SYNCOMPR

			first stage		**second stage**		**third stage**		**fourth stage**		
Wood feed bone dry tpd	Wood feed dried lb/hr	H2 produced scfd	power hp	cost 1994$	power hp	cost 1994$	power hp	cost 1994$	power hp	cost 1994$	**total cost 1994$**
0.01068	1	212	0.0161		0.01598		0.01596		0.01593		
30	2,809	595,028	45.2	$55,000	44.9	55300.0	44.8	$55,200	44.7	$55,100	**$220,600**
300	28,090	5,950,281	452.2	$313,500	448.9	311800.0	448.3	$311,500	447.5	$11,000	**$947,800**
1000	93,633	19,834,270	1507.5	$774,600	1496.3	770300.0	1494.4	$769,500	1491.6	$768,500	**$3,082,900**

Heat Exchangers and Heaters

GSTMGEN

Wood feed bone dry tpd	Wood feed dried lb/hr	H2 produced scfd	duty Btu/hr	delta Tlm °F	Avg U Btu/hr/sqft	area sqft	cost 1994$
0.01068	1	212	632.9	679.2815	192.0261	0.0049	
30	2,809	595,028	1.78E+06	679.2815	192.0261	13.6	$1,200
300	28,090	5,950,281	1.78E+07	679.2815	192.0261	136.3	$7,100
1000	93,633	19,834,270	5.93E+07	679.2815	192.0261	454.3	$13,000

LTCOOL

Wood feed bone dry tpd	Wood feed dried lb/hr	H2 produced scfd	duty Btu/hr	delta Tlm °F	Avg U Btu/hr/sqft	area sqft	cost 1994$
0.01068	1	212	365.5	326.6936	85.7387	0.0	
30	2,809	595,028	1.03E+06	326.6936	85.7387	36.7	$1,300
300	28,090	5,950,281	1.03E+07	326.6936	85.7387	366.5	$11,300
1000	93,633	19,834,270	3.42E+07	326.6936	85.7387	1221.8	$26,600

PSACOOL

Wood feed bone dry tpd	Wood feed dried lb/hr	H2 produced scfd	duty Btu/hr	delta Tlm °F	Avg U Btu/hr/sqft	area sqft	cost 1994$
0.01068	1	212	967.7	120	85	0.1	
30	2,809	595,028	2.72E+06	120	85	266.5	$9,300
300	28,090	5,950,281	2.72E+07	120	85	2665.0	$51,600
1000	93,633	19,834,270	9.06E+07	120	85	8883.2	$167,800

STMGEN6

Wood feed bone dry tpd	Wood feed dried lb/hr	H2 produced scfd	duty Btu/hr	delta Tlm °F	Avg U Btu/hr/sqft	area sqft	cost 1994$
0.01068	1	212	485.3	38.57	149.67	0.1	
30	2,809	595,028	1.36E+06	38.57	149.67	236.1	$8,700
300	28,090	5,950,281	1.36E+07	38.57	149.67	2361.4	$46,300
1000	93,633	19,834,270	4.54E+07	38.57	149.67	7871.4	$147,700

SYNCOOL1 / REFHTR (MODEL1)

Wood feed bone dry tpd	Wood feed dried lb/hr	H2 produced scfd	duty Btu/hr	delta Tlm °F	Avg U Btu/hr/sqft	area sqft	cost 1994$
0.01068	1	212	27.1	1256.2968	149.6937	0.0	
30	2,809	595,028	7.61E+04	1256.2968	149.6937	0.4	$1,000
300	28,090	5,950,281	7.61E+05	1256.2968	149.6937	4.0	$1,100
1000	93,633	19,834,270	2.54E+06	1256.2968	149.6937	13.5	$1,200

REFSTM / COMBCOOL (MODEL2)

			heatx1				
Wood feed bone dry tpd	Wood feed dried lb/hr	H2 produced scfd	duty Btu/hr	delta Tlm °F	Avg U Btu/hr/sqft	area sqft	cost 1994$
0.01068	1	212	901.8	537.7543	186.5534	0.0090	
30	2,809	595,028	2.53E+06	537.7543	186.5534	25.3	$1,300
300	28,090	5,950,281	2.53E+07	537.7543	186.5534	252.5	$9,000
1000	93,633	19,834,270	8.44E+07	537.7543	186.5534	841.7	$20,000

SYNCOMPR INTERSTAGE COOLERS

INTER1A FLASH DRUM

Wood feed bone dry tpd	Wood feed dried lb/hr	H2 produced scfd	**heatx1** duty Btu/hr	delta Tlm °F	Avg U Btu/hr/sqft	area sqft	cost 1994$
0.01068	1	212	510	28.8	149.6937	0.1183	
30	2,809	595,028	1.43E+06	28.8	149.6937	332.3	$11,100
300	28,090	5,950,281	1.43E+07	28.8	149.6937	3323.0	$63,100
1000	93,633	19,834,270	4.78E+07	28.8	149.6937	11,076.51	$206,400

****cost of two identical heat exchangers

INTER1B FLASH DRUM

Wood feed bone dry tpd	Wood feed dried lb/hr	H2 produced scfd	**heatx1** duty Btu/hr	delta Tlm °F	Avg U Btu/hr/sqft	area sqft	cost 1994$
0.01068	1	212	510	28.8	149.6937	0.1183	
30	2,809	595,028	1.43E+06	28.8	149.6937	332.3	$11,100
300	28,090	5,950,281	1.43E+07	28.8	149.6937	3323.0	$63,100
1000	93,633	19,834,270	4.78E+07	28.8	149.6937	11076.5	$206,400

****cost of two identical heat exchangers

INTER1C FLASH DRUM

Wood feed bone dry tpd	Wood feed dried lb/hr	H2 produced scfd	**heatx1** duty Btu/hr	delta Tlm °F	Avg U Btu/hr/sqft	area sqft	cost 1994$
0.01068	1	212	510	28.8	149.6937	0.1183	
30	2,809	595,028	1.43E+06	28.8	149.6937	332.3	$11,100
300	28,090	5,950,281	1.43E+07	28.8	149.6937	3323.0	$63,100
1000	93,633	19,834,270	4.78E+07	28.8	149.6937	11076.5	$206,400

****cost of two identical heat exchangers

OFFCOMPR INTERSTAGE COOLERS

INTER2A

Wood feed bone dry tpd	Wood feed dried lb/hr	H2 produced scfd	duty Btu/hr	delta Tlm °F	Avg U Btu/hr/sqft	area sqft	cost 1994$
0.01068	1	212	71	75.9471	19.3917	0.0482	
30	2,809	595,028	1.99E+05	75.9471	19.3917	135.4	$6,700
300	28,090	5,950,281	1.99E+06	75.9471	19.3917	1354.2	$28,900
1000	93,633	19,834,270	6.65E+06	75.9471	19.3917	4514.0	$84,400

INTER2B

Wood feed bone dry tpd	Wood feed dried lb/hr	H2 produced scfd	duty Btu/hr	delta Tlm °F	Avg U Btu/hr/sqft	area sqft	cost 1994$
0.01068	1	212	60.3	58.4995	14.4888	0.0711	
30	2,809	595,028	1.69E+05	58.4995	14.4888	199.8	$8,200
300	28,090	5,950,281	1.69E+06	58.4995	14.4888	1998.4	$40,000
1000	93,633	19,834,270	5.65E+06	58.4995	14.4888	6661.3	$124,300

REACTORS

PRIMARY REFORMER

Wood feed bone dry tpd	Wood feed dried lb/hr	H2 produced scfd	Heat duty MMBtu/hr	Chem Cost 1994$	P&T, 3rd ed 1994$	Chem Eng, Oct 10, 1977 1994$	avg
0.01068	1	212	5.56E-04				
30	2,809	595,028	1.562	$53,600			$53,600
300	28,090	5,950,281	15.620	$328,600	$329,500	$335,800	$331,300
1000	93,633	19,834,270	52.067	$878,200	$915,200	$987,400	$926,933

Separation System

PSA SYSTEM

installed cost of PSA for 4.05 MMSCFD	$1,025,000
$/SCFD	0.253

Wood feed bone dry tpd	Wood feed dried lb/hr	H2 produced scfd	cost $
0.01068	1	212	
30	2,809	595,028	$150,594
300	28,090	5,950,281	$1,505,935
1000	93,633	19,834,270	$5,019,784

Gasification (installed)

cost of a 2200 bone dry ton/day gasifcation plant: $12,440,143

Wood feed bone dry tpd	Wood feed dried lb/hr	H2 produced scfd	gasifier plant cost 1994 K$
0.01068	1	212	
30	2,809	595,028	$615,339
300	28,090	5,950,281	$3,084,000
1000	93,633	19,834,270	$7,163,570

Capital Requirements

Capital expense	% of purchased equipment cost
instrumentation	18%
piping	66%
electrical	11%
buildings	18%
yard improvements	10%
service facilities	70%
land	6%
engineering and construction	74%
contingencies	42%

Equipment capital

Wood feed bone dry tpd	Wood feed dried lb/hr	H2 produced scfd	uninstalled capital	installation cost	other equipment installed	total equipment cost 1994$	total uninstalled capital
30	2,809	595,028	$572,940	$269,282	$765,932	$1,608,154	$1,093,982
300	28,090	5,950,281	$3,219,070	$1,512,963	$4,589,935	$9,321,968	$6,341,475
1000	93,633	19,834,270	$9,035,813	$4,246,832	$12,183,354	$25,466,000	$17,323,809

Other fixed capital investment

Wood feed bone dry tpd	Wood feed dried lb/hr	H2 produced scfd	instrumentation	piping	electrical	buildings	yard	service facilities	land	engineering	contingencies	total fixed capitc
30	2,809	595,028	$196,917	$722,028	$120,338	$196,917	$109,398	$765,788	$65,639	$809,547	$459,473	$3,446,045
300	28,090	5,950,281	$1,141,465	$4,185,373	$697,562	$1,141,465	$634,147	$4,439,032	$380,488	$4,692,691	$2,663,419	$19,975,646
1000	93,633	19,834,270	$3,118,286	$11,433,714	$1,905,619	$3,118,286	$1,732,381	$12,126,667	$1,039,429	$12,819,619	$7,276,000	$54,569,999

Total fixed capital investment

Wood feed bone dry tpd	Wood feed dried lb/hr	H2 produced scfd	fixed capital
30	2,809	595,028	$5,054,199
300	28,090	5,950,281	$29,297,614
1000	93,633	19,834,270	$80,035,999

Working capital 18% of the capital expenditures estimated so far.

Wood feed bone dry tpd	Wood feed dried lb/hr	H2 produced scfd	working capital
30	2,809	595,028	$909,756
300	28,090	5,950,281	$5,273,571
1000	93,633	19,834,270	$14,406,480

Operating costs

electricity cost	0.05	$/kWh
on-line factor	0.9	

Electricity

Wood feed bone dry tpd	Wood feed dried lb/hr	H2 produced scfd	power requiremer hp	cost $/yr
0.01068	1	212	0.152	
30	2,809	595,028	427.896	$125,794
300	28,090	5,950,281	4278.963	$1,257,943
1000	93,633	19,834,270	14263.210	$4,193,145

Water

for gasification	0.45	lb/lb bdw
for reforming	0.64	lb/lb bdw
for steam generation	2.97	lb/lb bdw
BFW cost	$0.33	$/1000 liters

Wood feed bone dry tpd	Wood feed dried lb/hr	H2 produced scfd	for gasification 1000 liters/year	for reforming 1000 liters/year	for steam generatio 1000 liters/year	total BFW 1000 liters/year
30	2,809	595,028	2.01	2.86	13.29	18.16
300	28,090	5,950,281	20.09	28.63	132.89	181.61
1000	93,633	19,834,270	66.95	95.43	442.97	605.35

Operating costs of PSA

Wood feed bone dry tpd	Wood feed dried lb/hr	H2 produced scfd	op cost $/1000 SCF	cost $/yr
30	2,809	595,028	$6.50	$3,868
300	28,090	5,950,281	$6.50	$38,677
1000	93,633	19,834,270	$6.50	$128,923

Labor

Wood feed bone dry tpd	Wood feed dried lb/hr	H2 produced scfd	operators $28,700	formen $30,500	supervisors $39,300	total labor cost $/yr
			personnel and their cost per year			
30	2,809	595,028	3	1	1	$155,900
300	28,090	5,950,281	6	2	1	$272,500
1000	93,633	19,834,270	8	2	1	$329,900

Byproduct credit: steam

500 psig steam

stream steam6	0.2838	lb/lb dried wood
total	0.2838	

Wood feed bone dry tpd	Wood feed dried lb/hr	H2 produced scfd	steam produced lb/hr	steam produced 1000 kg/year	selling price $/1000 kg	yearly revenue $
30	2,809	595,028	797	3,167.62	$7.88	$24,960.83
300	28,090	5,950,281	7,972	31,676.18	$7.88	$249,608.27
1000	93,633	19,834,270	26,573	105,587.26	$7.88	$832,027.57

100 psig steam

stream steam1a	1.125	lb/lb dried wood
stream steam2a	0.056499	lb/lb dried wood
stream steam2b	0.048249	lb/lb dried wood
stream steam4	0.378	

stream steam5	0.754	lb/lb dried wood
total	2.362048	

Wood feed bone dry tpd	Wood feed dried lb/hr	H2 produced scfd	steam produced lb/hr	steam produced 1000 kg/year	selling price $/1000 kg	yearly revenue $
30	2,809	595,028	6,635	26,363.87	$5.18	$136,564.82
300	28,090	5,950,281	66,350	263,638.65	$5.18	$1,365,648.22
1000	93,633	19,834,270	221,166	878,795.51	$5.18	$4,552,160.74

General Equipment Sizes and Costs
Scheme 3

Scheme 3: no low temperature shift reactor
Capital investment and operating costs at bottom of spreadsheet

Pumps and Compressors

WATPUMP

Wood feed bone dry tpd	Wood feed dried lb/hr	H2 produced scfd	power hp	flowrate ft3/hr	flowrate gal/min	delta P psi	cost 1994$
0.01068	1	257	0.001	0.012	0.00	333	
30	2,809	721,770	2.763	33.7	4.21	333	$2,900
300	28,090	7,217,697	27.633	337.4	42.06	333	$8,100
1000	93,633	24,058,989	92.111	1124.5	140.20	333	$14,800

B5 (syncompr water pump)

Wood feed bone dry tpd	Wood feed dried lb/hr	H2 produced scfd	power hp	flowrate ft3/hr	flowrate gal/min	delta P psi	cost 1994$
0.01068	1	257	0.001	0.011	0.00	510	
30	2,809	721,770	4.018	32.0	3.99	510	$3,240
300	28,090	7,217,697	40.180	320.3	39.93	510	$9,720
1000	93,633	24,058,989	133.933	1067.6	133.10	510	$25,160

B3 (ltcool water pump)

Wood feed bone dry tpd	Wood feed dried lb/hr	H2 produced scfd	power hp	flowrate ft3/hr	flowrate gal/min	delta P psi	cost 1994$
0.01068	1	257	0.001	0.006	0.00	485.304	
30	2,809	721,770	2.004	16.8	2.09	485.304	$2,590
300	28,090	7,217,697	20.045	167.9	20.93	485.304	$6,480
1000	93,633	24,058,989	66.816	559.7	69.78	485.304	$12,580

B7 (psacool water pump)

Wood feed bone dry tpd	Wood feed dried lb/hr	H2 produced scfd	power hp	flowrate ft3/hr	flowrate gal/min	delta P psi	cost 1994$
0.01068	1	257	0.000	0.016	0.00	85	
30	2,809	721,770	1.076	45.4	5.67	85	$1,800
300	28,090	7,217,697	10.758	454.5	56.66	85	$3,200
1000	93,633	24,058,989	35.861	1515.0	188.88	85	$5,400

B13 (stmgen6 water pump)

Wood feed bone dry tpd	Wood feed dried lb/hr	H2 produced scfd	power hp	flowrate ft3/hr	flowrate gal/min	delta P psi	cost 1994$
0.01068	1	257	0.001	0.008	0.00	310	
30	2,809	721,770	1.683	22.1	2.75	310	$2,400
300	28,090	7,217,697	16.826	220.7	27.51	310	$5,670
1000	93,633	24,058,989	56.088	735.5	91.70	310	$11,340

pump1

Wood feed bone dry tpd	Wood feed dried lb/hr	H2 produced scfd	power hp	flowrate ft3/hr	flowrate gal/min	delta P psi	cost 1994$
0.01068	1	257	0.001	0.018	0.00	150	
30	2,809	721,770	1.831	49.6	6.19	150	$2,000
300	28,090	7,217,697	18.307	496.2	61.86	150	$4,200
1000	93,633	24,058,989	61.023	1653.8	206.19	150	$7,500

pump2

Wood feed bone dry tpd	Wood feed dried lb/hr	H2 produced scfd	power hp	flowrate ft3/hr	flowrate gal/min	delta P psi	cost 1994$
0.01068	1	257	0.001	0.018	0.00	150	
30	2,809	721,770	1.831	49.6	6.19	150	$2,000
300	28,090	7,217,697	18.307	496.2	61.86	150	$4,200
1000	93,633	24,058,989	61.023	1653.8	206.19	150	$7,500

pump3

Wood feed bone dry tpd	Wood feed dried lb/hr	H2 produced scfd	power hp	flowrate ft3/hr	flowrate gal/min	delta P psi	cost 1994$
0.01068	1	257	0.001	0.018	0.00	150	
30	2,809	721,770	1.831	49.6	6.19	150	$2,000
300	28,090	7,217,697	18.307	496.2	61.86	150	$4,200
1000	93,633	24,058,989	61.023	1653.8	206.19	150	$7,500

pump4

Wood feed bone dry tpd	Wood feed dried lb/hr	H2 produced scfd	power hp	flowrate ft3/hr	flowrate gal/min	delta P psi	cost 1994$
0.01068	1	257	2.49E-05	0.001	0.00	85	
30	2,809	721,770	0.070	3.3	0.42	85	$1,500
300	28,090	7,217,697	0.699	33.4	4.17	85	$1,700
1000	93,633	24,058,989	2.330	111.4	13.89	85	$2,300

pump5

Wood feed bone dry tpd	Wood feed dried lb/hr	H2 produced scfd	power hp	flowrate ft3/hr	flowrate gal/min	delta P psi	cost 1994$
0.01068	1	257	0.000	0.001	0.00	85	
30	2,809	721,770	0.060	2.9	0.36	85	$1,500
300	28,090	7,217,697	0.597	28.5	3.56	85	$1,700
1000	93,633	24,058,989	1.989	95.1	11.86	85	$2,200

OFFCOMPR

			first stage		second stage		third stage		fourth stage		
Wood feed bone dry tpd	Wood feed dried lb/hr	H2 produced scfd	power hp	cost 1994$	power hp	cost 1994$	power hp	cost 1994$	power hp	cost 1994$	**total cost**
0.01068	1	257	0.024		0.02949		0.0281		0.0281		
30	2,809	721,770	67.2	$79,100	82.8	$92,600	78.9	$89,300	78.9	$89,300	**$350,300**
300	28,090	7,217,697	671.6	$422,000	828.4	$494,000	789.3	$476,400	789.3	$476,400	**$1,868,800**
1000	93,633	24,058,989	2238.8	$1,042,600	2761.2	$1,220,500	2631.1	$1,177,000	2631.1	$1,177,000	**$4,617,100**

SYNCOMPR

Wood feed bone dry tpd	Wood feed dried lb/hr	H2 produced scfd	first stage power hp	first stage cost 1994$	second stage power hp	second stage cost 1994$	third stage power hp	third stage cost 1994$	fourth stage power hp	fourth stage cost 1994$	total cost 1994$
0.01068	1	257	0.01814000		0.018		0.01797		0.01793		
30	2,809	721,770	51.0	$64,300	50.6	63900.0	50.5	$63,800	50.4	$63,700	**$255,700**
300	28,090	7,217,697	509.6	$342,900	505.6	340900.0	504.8	$340,500	503.7	$340,000	**$1,364,300**
1000	93,633	24,058,989	1698.5	$847,200	1685.4	832200.0	1682.6	$841,300	1678.8	$839,800	**$3,360,500**

Heat Exchangers and Heaters

GSTMGEN

Wood feed bone dry tpd	Wood feed dried lb/hr	H2 produced scfd	duty Btu/hr	delta Tlm °F	Avg U Btu/hr/sqft	area sqft	cost 1994$
0.01068	1	257	632.9	679.2815	192.0261	0.0049	
30	2,809	721,770	1.78E+06	679.2815	192.0261	13.6	$1,200
300	28,090	7,217,697	1.78E+07	679.2815	192.0261	136.3	$7,100
1000	93,633	24,058,989	5.93E+07	679.2815	192.0261	454.3	$13,000

LTCOOL

Wood feed bone dry tpd	Wood feed dried lb/hr	H2 produced scfd	duty Btu/hr	delta Tlm °F	Avg U Btu/hr/sqft	area sqft	cost 1994$
0.01068	1	257	365.5	326.6936	85.7387	0.0	
30	2,809	721,770	1.03E+06	326.6936	85.7387	36.7	$1,300
300	28,090	7,217,697	1.03E+07	326.6936	85.7387	366.5	$11,300
1000	93,633	24,058,989	3.42E+07	326.6936	85.7387	1221.8	$26,600

PSACOOL

Wood feed bone dry tpd	Wood feed dried lb/hr	H2 produced scfd	duty Btu/hr	delta Tlm °F	Avg U Btu/hr/sqft	area sqft	cost 1994$
0.01068	1	257	967.7	120	85	0.1	
30	2,809	721,770	2.72E+06	120	85	266.5	$9,300
300	28,090	7,217,697	2.72E+07	120	85	2665.0	$51,600
1000	93,633	24,058,989	9.06E+07	120	85	8883.2	$167,800

STMGEN6

Wood feed bone dry tpd	Wood feed dried lb/hr	H2 produced scfd	duty Btu/hr	delta Tlm °F	Avg U Btu/hr/sqft	area sqft	cost 1994$
0.01068	1	257	485.3	38.57	149.67	0.1	
30	2,809	721,770	1.36E+06	38.57	149.67	236.1	$8,700
300	28,090	7,217,697	1.36E+07	38.57	149.67	2361.4	$46,300
1000	93,633	24,058,989	4.54E+07	38.57	149.67	7871.4	$147,700

SYNCOOL1 / REFHTR (MODEL1)

Wood feed bone dry tpd	Wood feed dried lb/hr	H2 produced scfd	duty Btu/hr	delta Tlm °F	Avg U Btu/hr/sqft	area sqft	cost 1994$
0.01068	1	257	27.1	1256.2968	149.6937	0.0	
30	2,809	721,770	7.61E+04	1256.2968	149.6937	0.4	$1,000
300	28,090	7,217,697	7.61E+05	1256.2968	149.6937	4.0	$1,100
1000	93,633	24,058,989	2.54E+06	1256.2968	149.6937	13.5	$1,200

REFSTM / COMBCOOL (MODEL2)

heatx1

Wood feed bone dry tpd	Wood feed dried lb/hr	H2 produced scfd	duty Btu/hr	delta Tlm °F	Avg U Btu/hr/sqft	area sqft	cost 1994$
0.01068	1	257	901.8	537.7543	186.5534	0.0090	
30	2,809	721,770	2.53E+06	537.7543	186.5534	25.3	$1,300
300	28,090	7,217,697	2.53E+07	537.7543	186.5534	252.5	$9,000
1000	93,633	24,058,989	8.44E+07	537.7543	186.5534	841.7	$20,000

SYNCOMPR INTERSTAGE COOLERS

INTER1A FLASH DRUM

heatx1

Wood feed bone dry tpd	Wood feed dried lb/hr	H2 produced scfd	duty Btu/hr	delta Tlm °F	Avg U Btu/hr/sqft	area sqft	cost 1994$
0.01068	1	257	510	28.8	149.6937	0.1183	
30	2,809	721,770	1.43E+06	28.8	149.6937	332.3	$11,100
300	28,090	7,217,697	1.43E+07	28.8	149.6937	3323.0	$63,100
1000	93,633	24,058,989	4.78E+07	28.8	149.6937	11,076.51	$206,400

****cost of two identical heat exchangers

INTER1B FLASH DRUM

heatx1

Wood feed bone dry tpd	Wood feed dried lb/hr	H2 produced scfd	duty Btu/hr	delta Tlm °F	Avg U Btu/hr/sqft	area sqft	cost 1994$
0.01068	1	257	510	28.8	149.6937	0.1183	
30	2,809	721,770	1.43E+06	28.8	149.6937	332.3	$11,100
300	28,090	7,217,697	1.43E+07	28.8	149.6937	3323.0	$63,100
1000	93,633	24,058,989	4.78E+07	28.8	149.6937	11076.5	$206,400

****cost of two identical heat exchangers

INTER1C FLASH DRUM

Wood feed bone dry tpd	Wood feed dried lb/hr	H2 produced scfd	heatx1 duty Btu/hr	delta Tlm °F	Avg U Btu/hr/sqft	area sqft	cost 1994$
0.01068	1	257	510	28.8	149.6937	0.1183	
30	2,809	721,770	1.43E+06	28.8	149.6937	332.3	$11,100
300	28,090	7,217,697	1.43E+07	28.8	149.6937	3323.0	$63,100
1000	93,633	24,058,989	4.78E+07	28.8	149.6937	11076.5	$206,400

****cost of two identical heat exchangers

OFFCOMPR INTERSTAGE COOLERS

INTER2A

Wood feed bone dry tpd	Wood feed dried lb/hr	H2 produced scfd	duty Btu/hr	delta Tlm °F	Avg U Btu/hr/sqft	area sqft	cost 1994$
0.01068	1	257	71	75.9471	19.3917	0.0482	
30	2,809	721,770	1.99E+05	75.9471	19.3917	135.4	$6,700
300	28,090	7,217,697	1.99E+06	75.9471	19.3917	1354.2	$28,900
1000	93,633	24,058,989	6.65E+06	75.9471	19.3917	4514.0	$84,400

INTER2B

Wood feed bone dry tpd	Wood feed dried lb/hr	H2 produced scfd	duty Btu/hr	delta Tlm °F	Avg U Btu/hr/sqft	area sqft	cost 1994$
0.01068	1	257	60.3	58.4995	14.4888	0.0711	
30	2,809	721,770	1.69E+05	58.4995	14.4888	199.8	$8,200
300	28,090	7,217,697	1.69E+06	58.4995	14.4888	1998.4	$40,000
1000	93,633	24,058,989	5.65E+06	58.4995	14.4888	6661.3	$124,300

REACTORS

HTSHIFT

SV (1/hr) = 4000
height/diameter 2

Wood feed bone dry tpd	Wood feed dried lb/hr	H2 produced scfd	flowrate acfh*	reactor volume ft3	diameter ft	height ft	pressure psi	cost 1994$ SS316
0.01068	1	257	3.13	0.0008	0.08	0.16	504	
30	2,809	721,770	8,804	2.20	1.12	2.24	504	$6,700
300	28,090	7,217,697	88,039	22.01	2.41	4.82	504	$26,700
1000	93,633	24,058,989	293,464	73.37	3.60	7.20	504	$56,200

* acfh = actual cubic feet per hour

PRIMARY REFORMER

Wood feed bone dry tpd	Wood feed dried lb/hr	H2 produced scfd	Heat duty MMBtu/hr	Chem Cost 1994$	P&T, 3rd ed 1994$	Chem Eng, Oct 10, 1977 1994$	avg
0.01068	1	257	5.56E-04				
30	2,809	721,770	1.562	$53,600			$53,600
300	28,090	7,217,697	15.620	$328,600	$329,500	$335,800	$331,300
1000	93,633	24,058,989	52.067	$878,200	$915,200	$987,400	$926,933

Separation System

PSA SYSTEM

installed cost of PSA for 4.05 MMSCFD $1,025,000
$/SCFD 0.253

Wood feed bone dry tpd	Wood feed dried lb/hr	H2 produced scfd	cost $
0.01068	1	257	
30	2,809	721,770	$182,670
300	28,090	7,217,697	$1,826,701
1000	93,633	24,058,989	$6,089,003

Gasification (installed)

cost of a 2200 bone dry ton/day gasifcation plant: $12,440,143

Wood feed bone dry tpd	Wood feed dried lb/hr	H2 produced scfd	gasifier plant cost 1994 K$
0.01068	1	257	
30	2,809	721,770	$615,339
300	28,090	7,217,697	$3,084,000
1000	93,633	24,058,989	$7,163,570

Capital Requirements

Capital expense	% of purchased equipment cost
instrumentation	18%
piping	66%
electrical	11%
buildings	18%
yard improvements	10%
service facilities	70%
land	6%
engineering and construction	74%
contingencies	42%

Equipment capital

Wood feed bone dry tpd	Wood feed dried lb/hr	H2 produced scfd	uninstalled capital	installation cost	other equipment installed	total equipment cost 1994$	total unistalled capital
30	2,809	721,770	$759,230	$356,838	$798,009	$1,914,077	$1,302,093
300	28,090	7,217,697	$4,024,870	$1,891,689	$4,910,701	$10,827,260	$7,365,483
1000	93,633	24,058,989	$10,261,213	$4,822,770	$13,252,573	$28,336,557	$19,276,569

Other fixed capital investment

Wood feed bone dry tpd	Wood feed dried lb/hr	H2 produced scfd	instrumentation	piping	electrical	buildings	yard	service facilities	land	engineering	contingencies	total related fixe
30	2,809	721,770	$234,377	$859,382	$143,230	$234,377	$130,209	$911,465	$78,126	$963,549	$546,879	$4,101,594
300	28,090	7,217,697	$1,325,787	$4,861,219	$810,203	$1,325,787	$736,548	$5,155,838	$441,929	$5,450,457	$3,093,503	$23,201,271
1000	93,633	24,058,989	$3,469,782	$12,722,536	$2,120,423	$3,469,782	$1,927,657	$13,493,598	$1,156,594	$14,264,661	$8,096,159	$60,721,193

Total fixed capital investment

Wood feed bone dry tpd	Wood feed dried lb/hr	H2 produced scfd	fixed capital
30	2,809	721,770	$6,015,671
300	28,090	7,217,697	$34,028,531
1000	93,633	24,058,989	$89,057,750

Working capital 18% of the capital expenditures estimated so far.

Wood feed bone dry tpd	Wood feed dried lb/hr	H2 produced scfd	working capital
30	2,809	721,770	$1,082,821
300	28,090	7,217,697	$6,125,136
1000	93,633	24,058,989	$16,030,395

Operating costs

electricity cost	0.05	$/kWh
on-line factor	0.9	

Electricity

Wood feed bone dry tpd	Wood feed dried lb/hr	H2 produced scfd	power requireme hp	cost $/yr
0.01068	1	257	0.188	
30	2,809	721,770	527.391	$155,044
300	28,090	7,217,697	5273.907	$1,550,440
1000	93,633	24,058,989	17579.690	$5,168,134

Water

for gasification	0.45	lb/lb bdw
for reforming	0.64	lb/lb bdw
for steam generation	2.97	lb/lb bdw
BFW cost	$0.33	$/1000 liters

Wood feed bone dry tpd	Wood feed dried lb/hr	H2 produced scfd	for gasification 1000 liters/year	for reforming 1000 liters/year	for steam generatio 1000 liters/year	total BFW 1000 liters/year
30	2,809	721,770	2.01	2.86	13.29	18.16
300	28,090	7,217,697	20.09	28.63	132.89	181.61
1000	93,633	24,058,989	66.95	95.43	442.97	605.35

Operating costs of PSA

Wood feed bone dry tpd	Wood feed dried lb/hr	H2 produced scfd	op cost $/1000 SCF	cost $/yr
30	2,809	721,770	$6.50	$4,692
300	28,090	7,217,697	$6.50	$46,915
1000	93,633	24,058,989	$6.50	$156,383

Labor

Wood feed bone dry tpd	Wood feed dried lb/hr	H2 produced scfd	operators	formen	supervisors	total labor cost $/yr
			personnel and their cost per year			
			$28,700	$30,500	$39,300	
30	2,809	721,770	3	1	1	$155,900
300	28,090	7,217,697	6	2	1	$272,500
1000	93,633	24,058,989	8	2	1	$329,900

Byproduct credit: steam

500 psig steam		
stream steam6	0.2838	lb/lb dried wood
total	0.2838	

Wood feed bone dry tpd	Wood feed dried lb/hr	H2 produced scfd	steam produced lb/hr	steam produced 1000 kg/year	selling price $/1000 kg	yearly revenue $
30	2,809	721,770	797	3,167.62	$7.88	$24,960.83
300	28,090	7,217,697	7,972	31,676.18	$7.88	$249,608.27
1000	93,633	24,058,989	26,573	105,587.26	$7.88	$832,027.57

100 psig steam		
stream steam1a (3)	1.1253	lb/lb dried wood
stream steam2a	0.056499	lb/lb dried wood
stream steam2b	0.048249	lb/lb dried wood
stream steam4	0.378	
stream steam5	0.754	lb/lb dried wood
total	2.362048	

Wood feed bone dry tpd	Wood feed dried lb/hr	H2 produced scfd	steam produced lb/hr	steam produced 1000 kg/year	selling price $/1000 kg	yearly revenue $
30	2,809	721,770	6,635	26,363.87	$5.18	$136,564.82
300	28,090	7,217,697	66,350	263,638.65	$5.18	$1,365,648.22
1000	93,633	24,058,989	221,166	878,795.51	$5.18	$4,552,160.74

Appendix B: Cost sheets
Scheme 3

Appendix C: Process Stream Summary

Stream name	145	160	165	188	189	196	205	207
From block:	PUMP1	PUMP4	PUMP5	B13	PSACOOL	B3	SYNCOMPR	B2
To block	B6	INTER2A	INTER2B	STMGEN6		LTCOOL	B2	REFHTR
Mole Flow KMOL/HR								
TAR	0.0	0.0	0.0	0.0	0.0	0.0	3.3	4.6
H2	0.0	0.0	0.0	0.0	0.0	0.0	0.0	244.1
O2	0.0	0.0	0.0	0.0	0.0	0.0	0.0	0.0
N2	0.0	0.0	0.0	0.0	0.0	0.0	0.0	0.0
CO2	0.0	0.0	0.0	0.0	0.0	0.0	0.0	154.7
CO	0.0	0.0	0.0	0.0	0.0	0.0	0.0	496.2
H2O	1886.0	133.2	113.7	891.1	1519.3	669.1	0.0	1202.3
CH4	0.0	0.0	0.0	0.0	0.0	0.0	0.0	181.9
H2S	0.0	0.0	0.0	0.0	0.0	0.0	0.0	1.0
NH3	0.0	0.0	0.0	0.0	0.0	0.0	0.0	4.3
COS	0.0	0.0	0.0	0.0	0.0	0.0	0.0	0.0
SO2	0.0	0.0	0.0	0.0	0.0	0.0	0.0	0.0
SO3	0.0	0.0	0.0	0.0	0.0	0.0	0.0	0.0
NO2	0.0	0.0	0.0	0.0	0.0	0.0	0.0	0.0
NO	0.0	0.0	0.0	0.0	0.0	0.0	0.0	0.0
PHENOL	0.0	0.0	0.0	0.0	0.0	0.0	0.0	0.0
C6H6	0.0	0.0	0.0	0.0	0.0	0.0	0.0	0.0
C2H6	0.0	0.0	0.0	0.0	0.0	0.0	0.0	5.3
C2H4	0.0	0.0	0.0	0.0	0.0	0.0	0.0	53.1
C2H2	0.0	0.0	0.0	0.0	0.0	0.0	0.0	4.1
O2SI	0.0	0.0	0.0	0.0	0.0	0.0	0.0	0.0
CARBON	0.0	0.0	0.0	0.0	0.0	0.0	0.0	0.0

Appendix C: Cost sheets

Stream name	208	212	ARWOOD	ASHSAND	BFW1A	BFW2A	BFW2B	BFW4
From block:	B5	B7		COMBSPLT				
To block	B2	PSACOOL	WOODSEP	SANDSPLT	PUMP1	PUMP4	PUMP5	B13
Mole Flow KMOL/HR								
TAR	0.0	0.0	0.0	0.0	0.0	0.0	0.0	0.0
H2	0.0	0.0	0.0	0.0	0.0	0.0	0.0	0.0
O2	0.0	0.0	0.0	0.0	0.0	0.0	0.0	0.0
N2	0.0	0.0	0.0	0.0	0.0	0.0	0.0	0.0
CO2	0.0	0.0	0.0	0.0	0.0	0.0	0.0	0.0
CO	0.0	0.0	0.0	0.0	0.0	0.0	0.0	0.0
H2O	1202.3	1777.6	1838.9	0.0	1886.0	133.2	113.7	891.1
CH4	0.0	0.0	0.0	0.0	0.0	0.0	0.0	0.0
H2S	0.0	0.0	0.0	0.0	0.0	0.0	0.0	0.0
NH3	0.0	0.0	0.0	0.0	0.0	0.0	0.0	0.0
COS	0.0	0.0	0.0	0.0	0.0	0.0	0.0	0.0
SO2	0.0	0.0	0.0	0.0	0.0	0.0	0.0	0.0
SO3	0.0	0.0	0.0	0.0	0.0	0.0	0.0	0.0
NO2	0.0	0.0	0.0	0.0	0.0	0.0	0.0	0.0
NO	0.0	0.0	0.0	0.0	0.0	0.0	0.0	0.0
PHENOL	0.0	0.0	0.0	0.0	0.0	0.0	0.0	0.0
C6H6	0.0	0.0	0.0	0.0	0.0	0.0	0.0	0.0
C2H6	0.0	0.0	0.0	0.0	0.0	0.0	0.0	0.0
C2H4	0.0	0.0	0.0	0.0	0.0	0.0	0.0	0.0
C2H2	0.0	0.0	0.0	0.0	0.0	0.0	0.0	0.0
O2SI	0.0	0.0	0.0	10780.9	0.0	0.0	0.0	0.0
CARBON	0.0	0.0	0.0	0.0	0.0	0.0	0.0	0.0

Stream name	BFW5	BFW6	CHAR	CHARCOMP	CHARFLUE	CI	CO	COLDIN
From block:			CHARSEP	CHARDEC	COMBSPLT		MODEL2	
To block	B7	B3	CHARDEC	CHARFURN	DRYRMIX	MODEL2		MODEL1
Mole Flow KMOL/HR								
TAR	0.0	0.0	0.0	0.0	0.0	0.0	0.0	4.6
H2	0.0	0.0	0.0	165.6	0.0	0.0	0.0	252.8
O2	0.0	0.0	0.0	92.1	228.2	0.0	0.0	0.0
N2	0.0	0.0	0.0	0.2	3080.9	0.0	0.0	0.0
CO2	0.0	0.0	0.0	0.0	599.0	0.0	0.0	154.4
CO	0.0	0.0	0.0	0.0	0.0	0.0	0.0	495.8
H2O	1777.6	669.1	0.0	0.0	205.6	1343.8	1343.8	1202.3
CH4	0.0	0.0	0.0	0.0	0.0	0.0	0.0	182.7
H2S	0.0	0.0	0.0	0.0	0.0	0.0	0.0	1.2
NH3	0.0	0.0	0.0	0.0	0.0	0.0	0.0	5.0
COS	0.0	0.0	0.0	0.0	0.0	0.0	0.0	0.0
SO2	0.0	0.0	0.0	0.0	0.1	0.0	0.0	0.0
SO3	0.0	0.0	0.0	0.0	0.0	0.0	0.0	0.0
NO2	0.0	0.0	0.0	0.0	0.0	0.0	0.0	0.0
NO	0.0	0.0	0.0	0.0	0.0	0.0	0.0	0.0
PHENOL	0.0	0.0	0.0	0.0	0.0	0.0	0.0	0.0
C6H6	0.0	0.0	0.0	0.0	0.0	0.0	0.0	0.0
C2H6	0.0	0.0	0.0	0.0	0.0	0.0	0.0	5.7
C2H4	0.0	0.0	0.0	0.0	0.0	0.0	0.0	53.0
C2H2	0.0	0.0	0.0	0.0	0.0	0.0	0.0	4.9
O2SI	0.0	0.0	10727.4	10727.4	0.0	0.0	0.0	0.0
CARBON	0.0	0.0	0.0	597.7	0.0	0.0	0.0	0.0

Appendix C: Cost sheets

Stream name	COLDOUT	COMBAIR	COMBAIR2	COMBPROD	COOLED1A	COOLED2A	COOLED2B	DRIED
From block:	MODEL1		AIRCOMP1	CHARFURN	B4	INTER2A	INTER2B	DRYRSEP
To block		AIRCOMP1	AIRHEAT	COMBSPLT				
Mole Flow KMOL/HR								
TAR	4.6	0.0	0.0	0.0	4.6	0.0	0.0	0.0
H2	252.8	0.0	0.0	0.0	244.1	0.0	0.0	0.0
O2	0.0	816.6	816.6	228.2	0.0	332.6	332.6	0.0
N2	0.0	3080.8	3080.8	3080.9	0.0	1254.6	1254.6	0.0
CO2	154.4	1.3	1.3	599.0	154.7	0.5	0.5	0.0
CO	495.8	0.0	0.0	0.0	496.2	0.0	0.0	0.0
H2O	1202.3	40.0	40.0	205.6	1202.3	16.3	16.3	0.0
CH4	182.7	0.0	0.0	0.0	181.9	0.0	0.0	0.0
H2S	1.2	0.0	0.0	0.0	1.0	0.0	0.0	0.0
NH3	5.0	0.0	0.0	0.0	4.3	0.0	0.0	0.0
COS	0.0	0.0	0.0	0.0	0.0	0.0	0.0	0.0
SO2	0.0	0.0	0.0	0.1	0.0	0.0	0.0	0.0
SO3	0.0	0.0	0.0	0.0	0.0	0.0	0.0	0.0
NO2	0.0	0.0	0.0	0.0	0.0	0.0	0.0	0.0
NO	0.0	0.0	0.0	0.0	0.0	0.0	0.0	0.0
PHENOL	0.0	0.0	0.0	0.0	0.0	0.0	0.0	0.0
C6H6	0.0	0.0	0.0	0.0	0.0	0.0	0.0	0.0
C2H6	5.7	0.0	0.0	0.0	5.3	0.0	0.0	0.0
C2H4	53.0	0.0	0.0	0.0	53.1	0.0	0.0	0.0
C2H2	4.9	0.0	0.0	0.0	4.1	0.0	0.0	0.0
O2SI	0.0	0.0	0.0	10780.9	0.0	0.0	0.0	0.0
CARBON	0.0	0.0	0.0	0.0	0.0	0.0	0.0	0.0

Stream name	DRYRAIR	DRYRAIR2	DRYWOOD	FLUENAIR	FROMHT	FROMLT	FROMPRIM	GAS1A
From block:		AIRCOMP2	DRY2	DRYRMIX	HTSHIFT	LTSHIFT	GSTMGEN	
To block	AIRCOMP2	DRYRMIX	DRYRSEP	DRY1	LTCOOL	PSACOOL	HTCOOL	B4
Mole Flow KMOL/HR								
TAR	0.0	0.0	0.0	0.0	0.0	0.0	0.0	4.6
H2	0.0	0.0	0.0	0.0	1546.0	1633.2	1274.4	244.1
O2	4705.0	4705.0	4933.3	4933.3	0.0	0.0	0.0	0.0
N2	17749.5	17749.5	20830.4	20830.4	2.1	2.1	2.1	0.0
CO2	7.5	7.5	606.4	606.4	812.7	900.0	541.2	154.7
CO	0.0	0.0	0.0	0.0	116.4	29.1	387.9	496.2
H2O	230.3	230.3	2274.8	435.9	1610.4	1523.1	1881.9	1202.3
CH4	0.0	0.0	0.0	0.0	74.5	74.5	74.5	181.9
H2S	0.0	0.0	0.0	0.0	1.0	1.0	1.0	1.0
NH3	0.0	0.0	0.0	0.0	0.2	0.2	0.2	4.3
COS	0.0	0.0	0.0	0.0	0.0	0.0	0.0	0.0
SO2	0.0	0.0	0.1	0.1	0.0	0.0	0.0	0.0
SO3	0.0	0.0	0.0	0.0	0.0	0.0	0.0	0.0
NO2	0.0	0.0	0.0	0.0	0.0	0.0	0.0	0.0
NO	0.0	0.0	0.0	0.0	0.0	0.0	0.0	0.0
PHENOL	0.0	0.0	0.0	0.0	0.0	0.0	0.0	0.0
C6H6	0.0	0.0	0.0	0.0	0.0	0.0	0.0	0.0
C2H6	0.0	0.0	0.0	0.0	0.0	0.0	0.0	5.3
C2H4	0.0	0.0	0.0	0.0	0.0	0.0	0.0	53.1
C2H2	0.0	0.0	0.0	0.0	0.0	0.0	0.0	4.1
O2SI	0.0	0.0	0.0	0.0	0.0	0.0	0.0	0.0
CARBON	0.0	0.0	0.0	0.0	0.0	0.0	0.0	0.0

Stream name	GAS2A	GAS2B	GASIFSTM	GASWAT	GFEED	GSTMIN	H2PROD	H2PURIFY
From block:			GSTMGEN	DRYRSEP	FEEDMIX		RECSPLT	PSA
To block	INTER2A	INTER2B	FEEDMIX		GASIFIER	GSTMGEN		RECSPLT
Mole Flow KMOL/HR								
TAR	0.0	0.0	0.0	0.0	0.0	0.0	0.0	0.0
H2	0.0	0.0	0.0	0.0	0.0	0.0	1268.4	2067.2
O2	332.6	332.6	0.0	4933.3	0.0	0.0	0.0	0.0
N2	1254.6	1254.6	0.0	20830.4	0.0	0.0	0.0	0.0
CO2	0.5	0.5	0.0	606.4	0.0	0.0	0.0	0.0
CO	0.0	0.0	0.0	0.0	0.0	0.0	0.0	0.0
H2O	16.3	16.3	943.0	2274.8	943.0	943.0	0.0	0.0
CH4	0.0	0.0	0.0	0.0	0.0	0.0	0.0	0.0
H2S	0.0	0.0	0.0	0.0	0.0	0.0	0.0	0.0
NH3	0.0	0.0	0.0	0.0	0.0	0.0	0.0	0.0
COS	0.0	0.0	0.0	0.0	0.0	0.0	0.0	0.0
SO2	0.0	0.0	0.0	0.1	0.0	0.0	0.0	0.0
SO3	0.0	0.0	0.0	0.0	0.0	0.0	0.0	0.0
NO2	0.0	0.0	0.0	0.0	0.0	0.0	0.0	0.0
NO	0.0	0.0	0.0	0.0	0.0	0.0	0.0	0.0
PHENOL	0.0	0.0	0.0	0.0	0.0	0.0	0.0	0.0
C6H6	0.0	0.0	0.0	0.0	0.0	0.0	0.0	0.0
C2H6	0.0	0.0	0.0	0.0	0.0	0.0	0.0	0.0
C2H4	0.0	0.0	0.0	0.0	0.0	0.0	0.0	0.0
C2H2	0.0	0.0	0.0	0.0	0.0	0.0	0.0	0.0
O2SI	0.0	0.0	0.0	0.0	10727.4	0.0	0.0	0.0
CARBON	0.0	0.0	0.0	0.0	0.0	0.0	0.0	0.0

Stream name	H2RECYCL	HCOMBAIR	HI	HO	HOTIN	HOTOUT	KOWATER	MIDWOOD
From block:	RECSPLT	AIRHEAT		MODEL2		MODEL1	B1	WOODSEP
To block	RECMIX	CHARFURN	MODEL2		MODEL1		B5	DRY2
Mole Flow KMOL/HR								
TAR	0.0	0.0	0.0	0.0	4.6	4.6	0.0	0.0
H2	798.8	0.0	0.0	0.0	252.8	252.8	0.0	0.0
O2	0.0	816.6	50.4	50.4	0.0	0.0	0.0	0.0
N2	0.0	3080.8	1500.9	1500.9	0.0	0.0	0.0	0.0
CO2	0.0	1.3	1004.6	1004.6	154.4	154.4	0.0	0.0
CO	0.0	0.0	0.0	0.0	495.8	495.8	0.0	0.0
H2O	0.0	40.0	535.1	535.1	1202.3	1202.3	1202.3	0.0
CH4	0.0	0.0	0.0	0.0	182.7	182.7	0.0	0.0
H2S	0.0	0.0	0.0	0.0	1.2	1.2	0.0	0.0
NH3	0.0	0.0	0.0	0.0	5.0	5.0	0.0	0.0
COS	0.0	0.0	0.0	0.0	0.0	0.0	0.0	0.0
SO2	0.0	0.0	0.0	0.0	0.0	0.0	0.0	0.0
SO3	0.0	0.0	0.0	0.0	0.0	0.0	0.0	0.0
NO2	0.0	0.0	0.0	0.0	0.0	0.0	0.0	0.0
NO	0.0	0.0	0.0	0.0	0.0	0.0	0.0	0.0
PHENOL	0.0	0.0	0.0	0.0	0.0	0.0	0.0	0.0
C6H6	0.0	0.0	0.0	0.0	0.0	0.0	0.0	0.0
C2H6	0.0	0.0	0.0	0.0	5.7	5.7	0.0	0.0
C2H4	0.0	0.0	0.0	0.0	53.0	53.0	0.0	0.0
C2H2	0.0	0.0	0.0	0.0	4.9	4.9	0.0	0.0
O2SI	0.0	0.0	0.0	0.0	0.0	0.0	0.0	0.0
CARBON	0.0	0.0	0.0	0.0	0.0	0.0	0.0	0.0

Appendix C: Cost sheets

Stream name	OFFAIR1	OFFAIR2	OFFFLUE1	OFFFLUE2	OFFFLUE3	OFFGAS	REFSTM	REFSTMA
From block:		OFFCOMPR	OFFCOMB	COMBCOOL	STMGEN6	PSA	REFSTM	
To block	OFFCOMPR	OFFCOMB	COMBCOOL	STMGEN6		OFFCOMB	PRIMARY	WATPUMP
Mole Flow KMOL/HR								
TAR	0.0	0.0	0.0	0.0	0.0	0.0	0.0	0.0
H2	0.0	0.0	0.0	0.0	0.0	364.8	0.0	0.0
O2	397.8	397.8	50.2	50.2	50.2	0.0	0.0	0.0
N2	1500.6	1500.6	1502.6	1502.6	1502.6	2.1	0.0	0.0
CO2	0.6	0.6	1004.2	1004.2	1004.2	900.0	0.0	0.0
CO	0.0	0.0	0.0	0.0	0.0	29.1	0.0	0.0
H2O	19.5	19.5	538.2	538.2	538.2	3.8	1344.4	1344.4
CH4	0.0	0.0	0.0	0.0	0.0	74.5	0.0	0.0
H2S	0.0	0.0	0.0	0.0	0.0	1.0	0.0	0.0
NH3	0.0	0.0	0.0	0.0	0.0	0.2	0.0	0.0
COS	0.0	0.0	0.0	0.0	0.0	0.0	0.0	0.0
SO2	0.0	0.0	0.9	0.9	0.9	0.0	0.0	0.0
SO3	0.0	0.0	0.1	0.1	0.1	0.0	0.0	0.0
NO2	0.0	0.0	0.0	0.0	0.0	0.0	0.0	0.0
NO	0.0	0.0	0.2	0.2	0.2	0.0	0.0	0.0
PHENOL	0.0	0.0	0.0	0.0	0.0	0.0	0.0	0.0
C6H6	0.0	0.0	0.0	0.0	0.0	0.0	0.0	0.0
C2H6	0.0	0.0	0.0	0.0	0.0	0.0	0.0	0.0
C2H4	0.0	0.0	0.0	0.0	0.0	0.0	0.0	0.0
C2H2	0.0	0.0	0.0	0.0	0.0	0.0	0.0	0.0
O2SI	0.0	0.0	0.0	0.0	0.0	0.0	0.0	0.0
CARBON	0.0	0.0	0.0	0.0	0.0	0.0	0.0	0.0

Stream name	REFSTMB	SAND	SANDPURG	SANDSUPP	STEAM1A	STEAM2A	STEAM2B	STEAM4
From block:	WATPUMP	SANDSPLT	SANDSPLT		STMFLASH	INTER2A	INTER2B	STMGEN6
To block	REFSTM	FEEDMIX		CHARFURN				
Mole Flow KMOL/HR								
TAR	0.0	0.0	0.0	0.0	0.0	0.0	0.0	0.0
H2	0.0	0.0	0.0	0.0	0.0	0.0	0.0	0.0
O2	0.0	0.0	0.0	0.0	0.0	0.0	0.0	0.0
N2	0.0	0.0	0.0	0.0	0.0	0.0	0.0	0.0
CO2	0.0	0.0	0.0	0.0	0.0	0.0	0.0	0.0
CO	0.0	0.0	0.0	0.0	0.0	0.0	0.0	0.0
H2O	1344.4	0.0	0.0	0.0	884.3	133.2	113.7	891.1
CH4	0.0	0.0	0.0	0.0	0.0	0.0	0.0	0.0
H2S	0.0	0.0	0.0	0.0	0.0	0.0	0.0	0.0
NH3	0.0	0.0	0.0	0.0	0.0	0.0	0.0	0.0
COS	0.0	0.0	0.0	0.0	0.0	0.0	0.0	0.0
SO2	0.0	0.0	0.0	0.0	0.0	0.0	0.0	0.0
SO3	0.0	0.0	0.0	0.0	0.0	0.0	0.0	0.0
NO2	0.0	0.0	0.0	0.0	0.0	0.0	0.0	0.0
NO	0.0	0.0	0.0	0.0	0.0	0.0	0.0	0.0
PHENOL	0.0	0.0	0.0	0.0	0.0	0.0	0.0	0.0
C6H6	0.0	0.0	0.0	0.0	0.0	0.0	0.0	0.0
C2H6	0.0	0.0	0.0	0.0	0.0	0.0	0.0	0.0
C2H4	0.0	0.0	0.0	0.0	0.0	0.0	0.0	0.0
C2H2	0.0	0.0	0.0	0.0	0.0	0.0	0.0	0.0
O2SI	0.0	10727.4	53.9	53.5	0.0	0.0	0.0	0.0
CARBON	0.0	0.0	0.0	0.0	0.0	0.0	0.0	0.0

Appendix C: Cost sheets

Stream name	STEAM5	STEAM6	STMWAT	SYNCOLD	SYNCOMPD	SYNGAS	SYNREFRM	TOCOMPR
From block:	PSACOOL	LTCOOL	B6	SYNCOOL1	SYNCOMPR	CHARSEP	PRIMARY	B1
To block			STMFLASH	B1	B2	SYNCOOL1	GSTMGEN	SYNCOMPR
Mole Flow KMOL/HR								
TAR	0.0	0.0	0.0	4.6	1.2	4.6	0.0	4.6
H2	0.0	0.0	0.0	244.1	244.1	244.1	1274.4	244.1
O2	0.0	0.0	0.0	0.0	0.0	0.0	0.0	0.0
N2	0.0	0.0	0.0	0.0	0.0	0.0	2.1	0.0
CO2	0.0	0.0	0.0	154.7	154.7	154.7	541.2	154.7
CO	0.0	0.0	0.0	496.2	496.2	496.2	387.9	496.2
H2O	1777.6	669.1	1886.0	1202.3	0.0	1202.3	1881.9	0.0
CH4	0.0	0.0	0.0	181.9	181.9	181.9	74.5	181.9
H2S	0.0	0.0	0.0	1.0	1.0	1.0	1.0	1.0
NH3	0.0	0.0	0.0	4.3	4.3	4.3	0.2	4.3
COS	0.0	0.0	0.0	0.0	0.0	0.0	0.0	0.0
SO2	0.0	0.0	0.0	0.0	0.0	0.0	0.0	0.0
SO3	0.0	0.0	0.0	0.0	0.0	0.0	0.0	0.0
NO2	0.0	0.0	0.0	0.0	0.0	0.0	0.0	0.0
NO	0.0	0.0	0.0	0.0	0.0	0.0	0.0	0.0
PHENOL	0.0	0.0	0.0	0.0	0.0	0.0	0.0	0.0
C6H6	0.0	0.0	0.0	0.0	0.0	0.0	0.0	0.0
C2H6	0.0	0.0	0.0	5.3	5.3	5.3	0.0	5.3
C2H4	0.0	0.0	0.0	53.1	53.1	53.1	0.0	53.1
C2H2	0.0	0.0	0.0	4.1	4.1	4.1	0.0	4.1
O2SI	0.0	0.0	0.0	0.0	0.0	0.0	0.0	0.0
CARBON	0.0	0.0	0.0	0.0	0.0	0.0	0.0	0.0

Stream name	TOHT	TOLT	TOPSAA	TOPSAB	TOREFHOT	WAT1A	WETDAIR	WOOD
From block:	HTCOOL	LTCOOL	PSACOOL	RECMIX	REFHTR	STMFLASH	DRY1	
To block	HTSHIFT	LTSHIFT	RECMIX	PSA	PRIMARY		DRY2	FEEDMIX
Mole Flow KMOL/HR								
TAR	0.0	0.0	0.0	0.0	4.6	0.0	0.0	0.0
H2	1274.4	1546.0	1633.2	2432.0	244.1	0.0	0.0	0.0
O2	0.0	0.0	0.0	0.0	0.0	0.0	4933.3	0.0
N2	2.1	2.1	2.1	2.1	0.0	0.0	20830.4	0.0
CO2	541.2	812.7	900.0	900.0	154.7	0.0	606.4	0.0
CO	387.9	116.4	29.1	29.1	496.2	0.0	0.0	0.0
H2O	1881.9	1610.4	3.8	3.8	1202.3	1001.7	2274.8	0.0
CH4	74.5	74.5	74.5	74.5	181.9	0.0	0.0	0.0
H2S	1.0	1.0	1.0	1.0	1.0	0.0	0.0	0.0
NH3	0.2	0.2	0.2	0.2	4.3	0.0	0.0	0.0
COS	0.0	0.0	0.0	0.0	0.0	0.0	0.0	0.0
SO2	0.0	0.0	0.0	0.0	0.0	0.0	0.1	0.0
SO3	0.0	0.0	0.0	0.0	0.0	0.0	0.0	0.0
NO2	0.0	0.0	0.0	0.0	0.0	0.0	0.0	0.0
NO	0.0	0.0	0.0	0.0	0.0	0.0	0.0	0.0
PHENOL	0.0	0.0	0.0	0.0	0.0	0.0	0.0	0.0
C6H6	0.0	0.0	0.0	0.0	0.0	0.0	0.0	0.0
C2H6	0.0	0.0	0.0	0.0	5.3	0.0	0.0	0.0
C2H4	0.0	0.0	0.0	0.0	53.1	0.0	0.0	0.0
C2H2	0.0	0.0	0.0	0.0	4.1	0.0	0.0	0.0
O2SI	0.0	0.0	0.0	0.0	0.0	0.0	0.0	0.0
CARBON	0.0	0.0	0.0	0.0	0.0	0.0	0.0	0.0

Appendix C: Cost sheets

Stream name	WOODGAS	WOODWAT
From block:	GASIFIER	WOODSEP
To block	CHARSEP	DRY1
Mole Flow KMOL/HR		
TAR	4.6	0.0
H2	244.1	0.0
O2	0.0	0.0
N2	0.0	0.0
CO2	154.7	0.0
CO	496.2	0.0
H2O	1202.3	1838.9
CH4	181.9	0.0
H2S	1.0	0.0
NH3	4.3	0.0
COS	0.0	0.0
SO2	0.0	0.0
SO3	0.0	0.0
NO2	0.0	0.0
NO	0.0	0.0
PHENOL	0.0	0.0
C6H6	0.0	0.0
C2H6	5.3	0.0
C2H4	53.1	0.0
C2H2	4.1	0.0
O2SI	10727.4	0.0
CARBON	0.0	0.0

Stream name	145	160	165	188	189	196	205	207
From block:	**PUMP1**	**PUMP4**	**PUMP5**	**B13**	**PSACOOL**	**B3**	**SYNCOMPR**	**B2**
To block	**B6**	**INTER2A**	**INTER2B**	**STMGEN6**		**LTCOOL**	**B2**	**REFHTR**
Temperature C	77.5	15.4	15.4	15.4	23.9	17.3	87.8	108.7
Pressure N/SQM	1.24E+06	7.93E+05	7.93E+05	7.93E+05	2.51E+06	3.45E+06	1.38E+05	3.65E+06
Vapor Frac	0.0	0.0	0.0	0.0	0.0	0.0	0.0	0.5
Mole Flow KMOL/HR	1886.0	133.2	113.7	891.1	1519.3	669.1	3.4	2351.6
Mass Flow KG/HR	33976.3	2399.6	2049.2	16053.8	27371.2	12054.5	431.5	48225.9
Volume Flow CUM/HR	46.9	3.2	2.7	21.1	27.4	15.9	1.5	1068.4
Enthalpy MMBTU/HR	-508.2	-36.6	-31.2	-244.7	-411.7	-183.6	0.3	-435.1
Mass Flow KG/HR								
TAR	0.0	0.0	0.0	0.0	0.0	0.0	429.2	586.3
H2	0.0	0.0	0.0	0.0	0.0	0.0	0.0	492.0
O2	0.0	0.0	0.0	0.0	0.0	0.0	0.0	0.0
N2	0.0	0.0	0.0	0.0	0.0	0.0	0.0	0.0
CO2	0.0	0.0	0.0	0.0	0.0	0.0	1.5	6808.4
CO	0.0	0.0	0.0	0.0	0.0	0.0	0.2	13898.3
H2O	33976.3	2399.6	2049.2	16053.8	27371.2	12054.5	0.0	21659.9
CH4	0.0	0.0	0.0	0.0	0.0	0.0	0.1	2918.9
H2S	0.0	0.0	0.0	0.0	0.0	0.0	0.0	33.2
NH3	0.0	0.0	0.0	0.0	0.0	0.0	0.1	73.0
COS	0.0	0.0	0.0	0.0	0.0	0.0	0.0	0.0
SO2	0.0	0.0	0.0	0.0	0.0	0.0	0.0	0.0
SO3	0.0	0.0	0.0	0.0	0.0	0.0	0.0	0.0
NO2	0.0	0.0	0.0	0.0	0.0	0.0	0.0	0.0
NO	0.0	0.0	0.0	0.0	0.0	0.0	0.0	0.0
PHENOL	0.0	0.0	0.0	0.0	0.0	0.0	0.0	0.0
C6H6	0.0	0.0	0.0	0.0	0.0	0.0	0.0	0.0
C2H6	0.0	0.0	0.0	0.0	0.0	0.0	0.0	159.1
C2H4	0.0	0.0	0.0	0.0	0.0	0.0	0.3	1488.9
C2H2	0.0	0.0	0.0	0.0	0.0	0.0	0.0	107.9
O2SI	0.0	0.0	0.0	0.0	0.0	0.0	0.0	0.0
CARBON	0.0	0.0	0.0	0.0	0.0	0.0	0.0	0.0
WOOD	0.0	0.0	0.0	0.0	0.0	0.0	0.0	0.0
ASH	0.0	0.0	0.0	0.0	0.0	0.0	0.0	0.0
CHAR	0.0	0.0	0.0	0.0	0.0	0.0	0.0	0.0

Appendix C: Cost sheets

Stream name	208	212	ARWOOD	ASHSAND	BFW1A	BFW2A	BFW2B	BFW4
From block:	B5	B7		COMBSPLT				
To block	B2	PSACOOL	WOODSEP	SANDSPLT	PUMP1	PUMP4	PUMP5	B13
Temperature C	93.3	15.4	15.0	0.0	76.7	15.0	15.0	15.0
Pressure N/SQM	3.65E+06	7.93E+05	1.01E+05	1.31E+05	2.07E+05	2.07E+05	2.07E+05	2.07E+05
Vapor Frac	0.0	0.0	0.0	0.0	0.0	0.0	0.0	0.0
Mole Flow KMOL/HR	1202.3	1777.6	1838.9	0.0	1886.0	133.2	113.7	891.1
Mass Flow KG/HR	21659.9	32024.2	33127.5	0.0	33976.3	2399.6	2049.2	16053.8
Volume Flow CUM/HR	30.3	42.1	43.6	0.0	46.8	3.2	2.7	21.1
Enthalpy MMBTU/HR	-322.3	-488.1	-505.0	0.0	-508.3	-36.6	-31.2	-244.7
Mass Flow KG/HR								
TAR	0.0	0.0	0.0	0.0	0.0	0.0	0.0	0.0
H2	0.0	0.0	0.0	0.0	0.0	0.0	0.0	0.0
O2	0.0	0.0	0.0	0.0	0.0	0.0	0.0	0.0
N2	0.0	0.0	0.0	0.0	0.0	0.0	0.0	0.0
CO2	0.0	0.0	0.0	0.0	0.0	0.0	0.0	0.0
CO	0.0	0.0	0.0	0.0	0.0	0.0	0.0	0.0
H2O	21659.9	32024.2	33127.5	0.0	33976.3	2399.6	2049.2	16053.8
CH4	0.0	0.0	0.0	0.0	0.0	0.0	0.0	0.0
H2S	0.0	0.0	0.0	0.0	0.0	0.0	0.0	0.0
NH3	0.0	0.0	0.0	0.0	0.0	0.0	0.0	0.0
COS	0.0	0.0	0.0	0.0	0.0	0.0	0.0	0.0
SO2	0.0	0.0	0.0	0.0	0.0	0.0	0.0	0.0
SO3	0.0	0.0	0.0	0.0	0.0	0.0	0.0	0.0
NO2	0.0	0.0	0.0	0.0	0.0	0.0	0.0	0.0
NO	0.0	0.0	0.0	0.0	0.0	0.0	0.0	0.0
PHENOL	0.0	0.0	0.0	0.0	0.0	0.0	0.0	0.0
C6H6	0.0	0.0	0.0	0.0	0.0	0.0	0.0	0.0
C2H6	0.0	0.0	0.0	0.0	0.0	0.0	0.0	0.0
C2H4	0.0	0.0	0.0	0.0	0.0	0.0	0.0	0.0
C2H2	0.0	0.0	0.0	0.0	0.0	0.0	0.0	0.0
O2SI	0.0	0.0	0.0	647782.3	0.0	0.0	0.0	0.0
CARBON	0.0	0.0	0.0	0.0	0.0	0.0	0.0	0.0
WOOD	0.0	0.0	42471.2	0.0	0.0	0.0	0.0	0.0
ASH	0.0	0.0	0.0	347.8	0.0	0.0	0.0	0.0
CHAR	0.0	0.0	0.0	0.0	0.0	0.0	0.0	0.0

Appendix C: Cost sheets

Stream name	BFW5	BFW6	CHAR	CHARCOMP	CHARFLUE	CI	CO	COLDIN
From block:			CHARSEP	CHARDEC	COMBSPLT		MODEL2	
To block	B7	B3	CHARDEC	CHARFURN	DRYRMIX	MODEL2		MODEL1
Temperature C	15.0	15.0	0.0	825.3	982.2	15.0	537.8	108.9
Pressure N/SQM	2.07E+05	1.01E+05	1.38E+05	1.38E+05	1.31E+05	2.07E+05	2.07E+05	3.65E+06
Vapor Frac	0.0	0.0	0.0	1.0	1.0	0.0	1.0	0.5
Mole Flow KMOL/HR	1777.6	669.1	0.0	257.9	4113.8	1343.8	1343.8	2362.4
Mass Flow KG/HR	32024.2	12054.5	0.0	3286.3	123679.8	24208.1	24208.1	48288.8
Volume Flow CUM/HR	42.1	15.8	0.0	17083.3	327877.8	31.8	43744.4	1079.1
Enthalpy MMBTU/HR	-488.1	-183.8	0.0	6.0	-141.9	-369.0	-284.6	-434.8
Mass Flow KG/HR								
TAR	0.0	0.0	0.0	0.0	0.0	0.0	0.0	594.6
H2	0.0	0.0	0.0	333.8	0.0	0.0	0.0	509.6
O2	0.0	0.0	0.0	2948.3	7303.6	0.0	0.0	0.0
N2	0.0	0.0	0.0	4.2	86306.9	0.0	0.0	0.0
CO2	0.0	0.0	0.0	0.0	26360.2	0.0	0.0	6795.3
CO	0.0	0.0	0.0	0.0	0.0	0.0	0.0	13887.8
H2O	32024.2	12054.5	0.0	0.0	3703.5	24208.1	24208.1	21659.9
CH4	0.0	0.0	0.0	0.0	0.0	0.0	0.0	2930.5
H2S	0.0	0.0	0.0	0.0	0.0	0.0	0.0	42.5
NH3	0.0	0.0	0.0	0.0	0.0	0.0	0.0	84.9
COS	0.0	0.0	0.0	0.0	0.0	0.0	0.0	0.0
SO2	0.0	0.0	0.0	0.0	5.6	0.0	0.0	0.0
SO3	0.0	0.0	0.0	0.0	0.0	0.0	0.0	0.0
NO2	0.0	0.0	0.0	0.0	0.0	0.0	0.0	0.0
NO	0.0	0.0	0.0	0.0	0.0	0.0	0.0	0.0
PHENOL	0.0	0.0	0.0	0.0	0.0	0.0	0.0	0.0
C6H6	0.0	0.0	0.0	0.0	0.0	0.0	0.0	0.0
C2H6	0.0	0.0	0.0	0.0	0.0	0.0	0.0	169.9
C2H4	0.0	0.0	0.0	0.0	0.0	0.0	0.0	1486.5
C2H2	0.0	0.0	0.0	0.0	0.0	0.0	0.0	127.4
O2SI	0.0	0.0	644565.4	644565.4	0.0	0.0	0.0	0.0
CARBON	0.0	0.0	0.4	7178.5	0.0	0.0	0.0	0.0
WOOD	0.0	0.0	0.0	0.0	0.0	0.0	0.0	0.0
ASH	0.0	0.0	0.0	347.8	0.0	0.0	0.0	0.0
CHAR	0.0	0.0	10815.0	0.0	0.0	0.0	0.0	0.0

Appendix C: Cost sheets

Stream name	COLDOUT	COMBAIR	COMBAIR2	COMBPROD	COOLED1A	COOLED2A	COOLED2B	DRIED
From block:	MODEL1		AIRCOMP1	CHARFURN	B4	INTER2A	INTER2B	DRYRSEP
To block		AIRCOMP1	AIRHEAT	COMBSPLT				
Temperature C	120.5	15.0	52.3	982.2	87.8	65.6	65.6	0.0
Pressure N/SQM	3.65E+06	1.01E+05	1.38E+05	1.31E+05	3.13E+05	5.03E+05	1.12E+06	1.01E+05
Vapor Frac	0.5	1.0	1.0	1.0	0.6	1.0	1.0	0.0
Mole Flow KMOL/HR	2362.4	3938.7	3938.7	4113.8	2351.5	1603.9	1603.9	0.0
Mass Flow KG/HR	48288.8	113211.7	113211.7	123679.8	48225.1	46102.9	46102.9	0.0
Volume Flow CUM/HR	1132.1	93112.1	77299.2	327877.8	13527.3	8984.5	4037.2	0.0
Enthalpy MMBTU/HR	-432.2	-10.8	-6.7	-141.9	-428.8	-2.2	-2.2	0.0
Mass Flow KG/HR								
TAR	594.6	0.0	0.0	0.0	586.3	0.0	0.0	0.0
H2	509.6	0.0	0.0	0.0	492.0	0.0	0.0	0.0
O2	0.0	26131.7	26131.7	7303.6	0.0	10641.5	10641.5	0.0
N2	0.0	86302.6	86302.6	86306.9	0.0	35144.8	35144.8	0.0
CO2	6795.3	57.2	57.2	26360.2	6808.3	23.3	23.3	0.0
CO	13887.8	0.0	0.0	0.0	13898.0	0.0	0.0	0.0
H2O	21659.9	720.2	720.2	3703.5	21659.5	293.3	293.3	0.0
CH4	2930.5	0.0	0.0	0.0	2918.9	0.0	0.0	0.0
H2S	42.5	0.0	0.0	0.0	33.2	0.0	0.0	0.0
NH3	84.9	0.0	0.0	0.0	73.0	0.0	0.0	0.0
COS	0.0	0.0	0.0	0.0	0.0	0.0	0.0	0.0
SO2	0.0	0.0	0.0	5.6	0.0	0.0	0.0	0.0
SO3	0.0	0.0	0.0	0.0	0.0	0.0	0.0	0.0
NO2	0.0	0.0	0.0	0.0	0.0	0.0	0.0	0.0
NO	0.0	0.0	0.0	0.0	0.0	0.0	0.0	0.0
PHENOL	0.0	0.0	0.0	0.0	0.0	0.0	0.0	0.0
C6H6	0.0	0.0	0.0	0.0	0.0	0.0	0.0	0.0
C2H6	169.9	0.0	0.0	0.0	159.1	0.0	0.0	0.0
C2H4	1486.5	0.0	0.0	0.0	1488.9	0.0	0.0	0.0
C2H2	127.4	0.0	0.0	0.0	107.9	0.0	0.0	0.0
O2SI	0.0	0.0	0.0	647782.3	0.0	0.0	0.0	0.0
CARBON	0.0	0.0	0.0	0.0	0.0	0.0	0.0	0.0
WOOD	0.0	0.0	0.0	0.0	0.0	0.0	0.0	42471.2
ASH	0.0	0.0	0.0	347.8	0.0	0.0	0.0	0.0
CHAR	0.0	0.0	0.0	0.0	0.0	0.0	0.0	0.0

Stream name	DRYRAIR	DRYRAIR2	DRYWOOD	FLUENAIR	FROMHT	FROMLT	FROMPRIM	GAS1A
From block:		AIRCOMP2	DRY2	DRYRMIX	HTSHIFT	LTSHIFT	GSTMGEN	
To block	AIRCOMP2	DRYRMIX	DRYRSEP	DRY1	LTCOOL	PSACOOL	HTCOOL	B4
Temperature C	15.0	15.0	68.4	186.9	434.8	221.0	466.0	203.3
Pressure N/SQM	1.01E+05	1.31E+05	1.01E+05	1.31E+05	2.95E+06	2.51E+06	3.47E+06	3.13E+05
Vapor Frac	1.0	1.0	1.0	1.0	1.0	1.0	1.0	1.0
Mole Flow KMOL/HR	22692.3	22692.3	28645.0	26806.1	4163.1	4163.1	4163.1	2351.5
Mass Flow KG/HR	652259.6	652259.6	809067.0	775939.4	72445.0	72445.0	72445.0	48225.1
Volume Flow CUM/HR	536457.4	414915.9	802583.3	783174.6	8310.2	6722.5	7371.3	29646.5
Enthalpy MMBTU/HR	-62.0	-62.1	-712.8	-204.0	-633.9	-668.1	-619.8	-381.0
Mass Flow KG/HR								
TAR	0.0	0.0	0.0	0.0	0.0	0.0	0.0	586.3
H2	0.0	0.0	0.0	0.0	3116.5	3292.4	2569.1	492.0
O2	150555.4	150555.4	157859.0	157859.0	0.0	0.0	0.0	0.0
N2	497225.3	497225.3	583532.1	583532.1	57.7	57.7	57.7	0.0
CO2	329.6	329.6	26689.7	26689.7	35768.6	39609.6	23818.8	6808.3
CO	0.0	0.0	0.0	0.0	3259.5	814.9	10865.1	13898.0
H2O	4149.4	4149.4	40980.5	7853.0	29011.7	27439.4	33903.3	21659.5
CH4	0.0	0.0	0.0	0.0	1194.6	1194.6	1194.6	2918.9
H2S	0.0	0.0	0.0	0.0	32.7	32.7	32.7	33.2
NH3	0.0	0.0	0.0	0.0	2.8	2.8	2.8	73.0
COS	0.0	0.0	0.0	0.0	0.8	0.8	0.8	0.0
SO2	0.0	0.0	5.6	5.6	0.0	0.0	0.0	0.0
SO3	0.0	0.0	0.0	0.0	0.0	0.0	0.0	0.0
NO2	0.0	0.0	0.0	0.0	0.0	0.0	0.0	0.0
NO	0.0	0.0	0.0	0.0	0.0	0.0	0.0	0.0
PHENOL	0.0	0.0	0.0	0.0	0.0	0.0	0.0	0.0
C6H6	0.0	0.0	0.0	0.0	0.0	0.0	0.0	0.0
C2H6	0.0	0.0	0.0	0.0	0.1	0.1	0.1	159.1
C2H4	0.0	0.0	0.0	0.0	0.0	0.0	0.0	1488.9
C2H2	0.0	0.0	0.0	0.0	0.0	0.0	0.0	107.9
O2SI	0.0	0.0	0.0	0.0	0.0	0.0	0.0	0.0
CARBON	0.0	0.0	0.0	0.0	0.0	0.0	0.0	0.0
WOOD	0.0	0.0	42471.2	0.0	0.0	0.0	0.0	0.0
ASH	0.0	0.0	0.0	0.0	0.0	0.0	0.0	0.0
CHAR	0.0	0.0	0.0	0.0	0.0	0.0	0.0	0.0

Appendix C: Cost sheets

Stream name	GAS2A	GAS2B	GASIFSTM	GASWAT	GFEED	GSTMIN	H2PROD	H2PURIFY
From block:			GSTMGEN	DRYRSEP	FEEDMIX		RECSPLT	PSA
To block	INTER2A	INTER2B	FEEDMIX		GASIFIER	GSTMGEN		RECSPLT
Temperature C	212.7	190.0	537.8	68.4	854.7	15.0	23.4	23.4
Pressure N/SQM	5.03E+05	1.12E+06	2.07E+05	1.01E+05	1.72E+05	2.07E+05	2.51E+06	2.51E+06
Vapor Frac	1.0	1.0	1.0	1.0	1.0	0.0	1.0	1.0
Mole Flow KMOL/HR	1603.9	1603.9	943.0	28645.0	943.0	943.0	1268.4	2067.2
Mass Flow KG/HR	46102.9	46102.9	16988.1	809067.0	16988.1	16988.1	2557.0	4167.2
Volume Flow CUM/HR	12905.4	5535.6	30697.9	802583.3	51296.0	22.3	1266.4	2063.9
Enthalpy MMBTU/HR	4.5	3.4	-199.7	-712.8	-188.1	-259.0	0.0	-0.1
Mass Flow KG/HR								
TAR	0.0	0.0	0.0	0.0	0.0	0.0	0.0	0.0
H2	0.0	0.0	0.0	0.0	0.0	0.0	2557.0	4167.2
O2	10641.5	10641.5	0.0	157859.0	0.0	0.0	0.0	0.0
N2	35144.8	35144.8	0.0	583532.1	0.0	0.0	0.0	0.0
CO2	23.3	23.3	0.0	26689.7	0.0	0.0	0.0	0.0
CO	0.0	0.0	0.0	0.0	0.0	0.0	0.0	0.0
H2O	293.3	293.3	16988.1	40980.5	16988.1	16988.1	0.0	0.0
CH4	0.0	0.0	0.0	0.0	0.0	0.0	0.0	0.0
H2S	0.0	0.0	0.0	0.0	0.0	0.0	0.0	0.0
NH3	0.0	0.0	0.0	0.0	0.0	0.0	0.0	0.0
COS	0.0	0.0	0.0	0.0	0.0	0.0	0.0	0.0
SO2	0.0	0.0	0.0	5.6	0.0	0.0	0.0	0.0
SO3	0.0	0.0	0.0	0.0	0.0	0.0	0.0	0.0
NO2	0.0	0.0	0.0	0.0	0.0	0.0	0.0	0.0
NO	0.0	0.0	0.0	0.0	0.0	0.0	0.0	0.0
PHENOL	0.0	0.0	0.0	0.0	0.0	0.0	0.0	0.0
C6H6	0.0	0.0	0.0	0.0	0.0	0.0	0.0	0.0
C2H6	0.0	0.0	0.0	0.0	0.0	0.0	0.0	0.0
C2H4	0.0	0.0	0.0	0.0	0.0	0.0	0.0	0.0
C2H2	0.0	0.0	0.0	0.0	0.0	0.0	0.0	0.0
O2SI	0.0	0.0	0.0	0.0	644565.4	0.0	0.0	0.0
CARBON	0.0	0.0	0.0	0.0	0.4	0.0	0.0	0.0
WOOD	0.0	0.0	0.0	0.0	42470.4	0.0	0.0	0.0
ASH	0.0	0.0	0.0	0.0	346.5	0.0	0.0	0.0
CHAR	0.0	0.0	0.0	0.0	0.4	0.0	0.0	0.0

Stream name	H2RECYCL	HCOMBAIR	HI	HO	HOTIN	HOTOUT	KOWATER	MIDWOOD
From block:	RECSPLT	AIRHEAT		MODEL2		MODEL1	B1	WOODSEP
To block	RECMIX	CHARFURN	MODEL2		MODEL1		B5	DRY2
Temperature C	23.4	52.3	946.7	225.4	825.3	800.0	90.6	0.0
Pressure N/SQM	2.51E+06	1.38E+05	2.50E+06	2.50E+06	1.38E+05	1.38E+05	1.38E+05	1.01E+05
Vapor Frac	1.0	1.0	1.0	1.0	1.0	1.0	0.0	0.0
Mole Flow KMOL/HR	798.8	3938.7	3091.1	3091.1	2362.4	2362.4	1202.3	0.0
Mass Flow KG/HR	1610.2	113211.7	97512.0	97512.0	48288.8	48288.8	21659.9	0.0
Volume Flow CUM/HR	797.5	77299.2	12618.0	5113.1	156495.9	152893.6	30.2	0.0
Enthalpy MMBTU/HR	0.0	-6.7	-393.5	-477.9	-324.2	-326.7	-322.7	0.0
Mass Flow KG/HR								
TAR	0.0	0.0	0.0	0.0	594.6	594.6	0.0	0.0
H2	1610.2	0.0	0.0	0.0	509.6	509.6	0.0	0.0
O2	0.0	26131.7	1613.9	1613.9	0.0	0.0	0.0	0.0
N2	0.0	86302.6	42045.7	42045.7	0.0	0.0	0.0	0.0
CO2	0.0	57.2	44211.6	44211.6	6795.3	6795.3	0.0	0.0
CO	0.0	0.0	0.0	0.0	13887.8	13887.8	0.0	0.0
H2O	0.0	720.2	9640.8	9640.8	21659.9	21659.9	21659.9	0.0
CH4	0.0	0.0	0.0	0.0	2930.5	2930.5	0.0	0.0
H2S	0.0	0.0	0.0	0.0	42.5	42.5	0.0	0.0
NH3	0.0	0.0	0.0	0.0	84.9	84.9	0.0	0.0
COS	0.0	0.0	0.0	0.0	0.0	0.0	0.0	0.0
SO2	0.0	0.0	0.0	0.0	0.0	0.0	0.0	0.0
SO3	0.0	0.0	0.0	0.0	0.0	0.0	0.0	0.0
NO2	0.0	0.0	0.0	0.0	0.0	0.0	0.0	0.0
NO	0.0	0.0	0.0	0.0	0.0	0.0	0.0	0.0
PHENOL	0.0	0.0	0.0	0.0	0.0	0.0	0.0	0.0
C6H6	0.0	0.0	0.0	0.0	0.0	0.0	0.0	0.0
C2H6	0.0	0.0	0.0	0.0	169.9	169.9	0.0	0.0
C2H4	0.0	0.0	0.0	0.0	1486.5	1486.5	0.0	0.0
C2H2	0.0	0.0	0.0	0.0	127.4	127.4	0.0	0.0
O2SI	0.0	0.0	0.0	0.0	0.0	0.0	0.0	0.0
CARBON	0.0	0.0	0.0	0.0	0.0	0.0	0.0	0.0
WOOD	0.0	0.0	0.0	0.0	0.0	0.0	0.0	42471.2
ASH	0.0	0.0	0.0	0.0	0.0	0.0	0.0	0.0
CHAR	0.0	0.0	0.0	0.0	0.0	0.0	0.0	0.0

Appendix C: Cost sheets

Stream name	OFFAIR1	OFFAIR2	OFFFLUE1	OFFFLUE2	OFFFLUE3	OFFGAS	REFSTM	REFSTMA
From block:		OFFCOMPR	OFFCOMB	COMBCOOL	STMGEN6	PSA	REFSTM	
To block	OFFCOMPR	OFFCOMB	COMBCOOL	STMGEN6		OFFCOMB	PRIMARY	WATPUMP
Temperature C	15.0	189.3	950.4	238.3	27.8	23.4	537.8	15.0
Pressure N/SQM	1.01E+05	2.50E+06	2.50E+06	2.50E+06	2.50E+06	2.51E+06	2.50E+06	2.07E+05
Vapor Frac	1.0	1.0	1.0	1.0	0.8	1.0	1.0	0.0
Mole Flow KMOL/HR	1918.4	1918.4	3096.3	3096.3	3096.3	1375.4	1344.4	1344.4
Mass Flow KG/HR	55142.6	55142.6	97659.3	97659.3	97659.3	42516.8	24219.1	24219.1
Volume Flow CUM/HR	45352.6	2986.4	12677.7	5260.0	2496.7	1271.7	3564.5	31.8
Enthalpy MMBTU/HR	-5.2	4.1	-393.7	-477.4	-522.6	-345.7	-285.3	-369.2
Mass Flow KG/HR								
TAR	0.0	0.0	0.0	0.0	0.0	0.0	0.0	0.0
H2	0.0	0.0	0.0	0.0	0.0	735.4	0.0	0.0
O2	12728.1	12728.1	1604.8	1604.8	1604.8	0.0	0.0	0.0
N2	42035.8	42035.8	42093.4	42093.4	42093.4	57.7	0.0	0.0
CO2	27.9	27.9	44195.8	44195.8	44195.8	39609.6	0.0	0.0
CO	0.0	0.0	0.0	0.0	0.0	814.9	0.0	0.0
H2O	350.8	350.8	9695.9	9695.9	9695.9	68.2	24219.1	24219.1
CH4	0.0	0.0	0.0	0.0	0.0	1194.6	0.0	0.0
H2S	0.0	0.0	0.0	0.0	0.0	32.7	0.0	0.0
NH3	0.0	0.0	0.0	0.0	0.0	2.8	0.0	0.0
COS	0.0	0.0	0.0	0.0	0.0	0.8	0.0	0.0
SO2	0.0	0.0	55.0	55.0	55.0	0.0	0.0	0.0
SO3	0.0	0.0	9.2	9.2	9.2	0.0	0.0	0.0
NO2	0.0	0.0	0.2	0.2	0.2	0.0	0.0	0.0
NO	0.0	0.0	5.2	5.2	5.2	0.0	0.0	0.0
PHENOL	0.0	0.0	0.0	0.0	0.0	0.0	0.0	0.0
C6H6	0.0	0.0	0.0	0.0	0.0	0.0	0.0	0.0
C2H6	0.0	0.0	0.0	0.0	0.0	0.1	0.0	0.0
C2H4	0.0	0.0	0.0	0.0	0.0	0.0	0.0	0.0
C2H2	0.0	0.0	0.0	0.0	0.0	0.0	0.0	0.0
O2SI	0.0	0.0	0.0	0.0	0.0	0.0	0.0	0.0
CARBON	0.0	0.0	0.0	0.0	0.0	0.0	0.0	0.0
WOOD	0.0	0.0	0.0	0.0	0.0	0.0	0.0	0.0
ASH	0.0	0.0	0.0	0.0	0.0	0.0	0.0	0.0
CHAR	0.0	0.0	0.0	0.0	0.0	0.0	0.0	0.0

Stream name	REFSTMB	SAND	SANDPURG	SANDSUPP	STEAM1A	STEAM2A	STEAM2B	STEAM4
From block:	WATPUMP	SANDSPLT	SANDSPLT		STMFLASH	INTER2A	INTER2B	STMGEN6
To block	REFSTM	FEEDMIX		CHARFURN				
Temperature C	16.6	0.0	0.0	15.0	175.4	177.6	170.4	204.2
Pressure N/SQM	2.50E+06	1.31E+05	1.31E+05	1.38E+05	8.96E+05	7.93E+05	7.93E+05	7.93E+05
Vapor Frac	0.0	0.0	0.0	0.0	1.0	1.0	1.0	1.0
Mole Flow KMOL/HR	1344.4	0.0	0.0	0.0	884.3	133.2	113.7	891.1
Mass Flow KG/HR	24219.1	0.0	0.0	0.4	15931.0	2399.6	2049.2	16053.8
Volume Flow CUM/HR	31.9	0.0	0.0	0.0	3510.0	604.4	506.9	4310.8
Enthalpy MMBTU/HR	-368.9	0.0	0.0	0.0	-198.8	-29.9	-25.6	-199.4
Mass Flow KG/HR								
TAR	0.0	0.0	0.0	0.0	0.0	0.0	0.0	0.0
H2	0.0	0.0	0.0	0.0	0.0	0.0	0.0	0.0
O2	0.0	0.0	0.0	0.0	0.0	0.0	0.0	0.0
N2	0.0	0.0	0.0	0.0	0.0	0.0	0.0	0.0
CO2	0.0	0.0	0.0	0.0	0.0	0.0	0.0	0.0
CO	0.0	0.0	0.0	0.0	0.0	0.0	0.0	0.0
H2O	24219.1	0.0	0.0	0.4	15931.0	2399.6	2049.2	16053.8
CH4	0.0	0.0	0.0	0.0	0.0	0.0	0.0	0.0
H2S	0.0	0.0	0.0	0.0	0.0	0.0	0.0	0.0
NH3	0.0	0.0	0.0	0.0	0.0	0.0	0.0	0.0
COS	0.0	0.0	0.0	0.0	0.0	0.0	0.0	0.0
SO2	0.0	0.0	0.0	0.0	0.0	0.0	0.0	0.0
SO3	0.0	0.0	0.0	0.0	0.0	0.0	0.0	0.0
NO2	0.0	0.0	0.0	0.0	0.0	0.0	0.0	0.0
NO	0.0	0.0	0.0	0.0	0.0	0.0	0.0	0.0
PHENOL	0.0	0.0	0.0	0.0	0.0	0.0	0.0	0.0
C6H6	0.0	0.0	0.0	0.0	0.0	0.0	0.0	0.0
C2H6	0.0	0.0	0.0	0.0	0.0	0.0	0.0	0.0
C2H4	0.0	0.0	0.0	0.0	0.0	0.0	0.0	0.0
C2H2	0.0	0.0	0.0	0.0	0.0	0.0	0.0	0.0
O2SI	0.0	644565.4	3238.9	3216.9	0.0	0.0	0.0	0.0
CARBON	0.0	0.0	0.0	0.0	0.0	0.0	0.0	0.0
WOOD	0.0	0.0	0.0	0.0	0.0	0.0	0.0	0.0
ASH	0.0	346.1	1.7	0.0	0.0	0.0	0.0	0.0
CHAR	0.0	0.0	0.0	0.0	0.0	0.0	0.0	0.0

Appendix C: Cost sheets

Stream name	STEAM5	STEAM6	STMWAT	SYNCOLD	SYNCOMPD	SYNGAS	SYNREFRM	TOCOMPR
From block:	PSACOOL	LTCOOL	B6	SYNCOOL1	SYNCOMPR	CHARSEP	PRIMARY	B1
To block			STMFLASH	B1	B2	SYNCOOL1	GSTMGEN	SYNCOMPR
Temperature C	182.2	254.5	189.3	90.6	200.7	825.3	850.0	90.6
Pressure N/SQM	7.93E+05	3.45E+06	1.24E+06	1.38E+05	3.65E+06	1.38E+05	3.47E+06	1.38E+05
Vapor Frac	1.0	1.0	0.4	0.9	1.0	1.0	1.0	1.0
Mole Flow KMOL/HR	1777.6	669.1	1886.0	2351.6	1145.8	2351.6	4163.1	1149.3
Mass Flow KG/HR	32024.2	12054.5	33976.3	48225.9	26134.5	48225.9	72445.0	26566.1
Volume Flow CUM/HR	8160.0	753.5	2483.4	47175.6	1251.8	155777.0	11264.9	25201.6
Enthalpy MMBTU/HR	-399.1	-149.4	-460.4	-397.6	-113.0	-324.7	-560.6	-116.6
Mass Flow KG/HR								
TAR	0.0	0.0	0.0	586.3	157.0	586.3	0.0	586.3
H2	0.0	0.0	0.0	492.0	492.0	492.0	2569.1	492.0
O2	0.0	0.0	0.0	0.0	0.0	0.0	0.0	0.0
N2	0.0	0.0	0.0	0.0	0.0	0.0	57.7	0.0
CO2	0.0	0.0	0.0	6808.4	6806.9	6808.4	23818.8	6808.4
CO	0.0	0.0	0.0	13898.3	13898.1	13898.3	10865.1	13898.3
H2O	32024.2	12054.5	33976.3	21659.9	0.0	21659.9	33903.3	0.0
CH4	0.0	0.0	0.0	2918.9	2918.8	2918.9	1194.6	2918.9
H2S	0.0	0.0	0.0	33.2	33.1	33.2	32.7	33.2
NH3	0.0	0.0	0.0	73.0	72.9	73.0	2.8	73.0
COS	0.0	0.0	0.0	0.0	0.0	0.0	0.8	0.0
SO2	0.0	0.0	0.0	0.0	0.0	0.0	0.0	0.0
SO3	0.0	0.0	0.0	0.0	0.0	0.0	0.0	0.0
NO2	0.0	0.0	0.0	0.0	0.0	0.0	0.0	0.0
NO	0.0	0.0	0.0	0.0	0.0	0.0	0.0	0.0
PHENOL	0.0	0.0	0.0	0.0	0.0	0.0	0.0	0.0
C6H6	0.0	0.0	0.0	0.0	0.0	0.0	0.0	0.0
C2H6	0.0	0.0	0.0	159.1	159.1	159.1	0.1	159.1
C2H4	0.0	0.0	0.0	1488.9	1488.7	1488.9	0.0	1488.9
C2H2	0.0	0.0	0.0	107.9	107.8	107.9	0.0	107.9
O2SI	0.0	0.0	0.0	0.0	0.0	0.0	0.0	0.0
CARBON	0.0	0.0	0.0	0.0	0.0	0.0	0.0	0.0
WOOD	0.0	0.0	0.0	0.0	0.0	0.0	0.0	0.0
ASH	0.0	0.0	0.0	0.0	0.0	0.0	0.0	0.0
CHAR	0.0	0.0	0.0	0.0	0.0	0.0	0.0	0.0

Appendix C: Cost sheets

Stream name	TOHT	TOLT	TOPSAA	TOPSAB	TOREFHOT	WAT1A	WETDAIR	WOOD
From block:	HTCOOL	LTCOOL	PSACOOL	RECMIX	REFHTR	STMFLASH	DRY1	
To block	HTSHIFT	LTSHIFT	RECMIX	PSA	PRIMARY		DRY2	FEEDMIX
Temperature C	370.0	200.0	23.9	23.4	800.0	175.4	73.1	68.3
Pressure N/SQM	3.47E+06	2.95E+06	2.51E+06	2.51E+06	3.65E+06	8.96E+05	1.01E+05	1.72E+05
Vapor Frac	1.0	1.0	1.0	1.0	1.0	0.0	1.0	0.0
Mole Flow KMOL/HR	4163.1	4163.1	2643.8	3442.6	2351.6	1001.7	28645.0	0.0
Mass Flow KG/HR	72445.0	72445.0	45073.8	46684.0	48225.9	18045.3	809067.0	0.0
Volume Flow CUM/HR	6377.5	5426.1	2583.9	3385.2	5776.2	27.8	813671.3	0.0
Enthalpy MMBTU/HR	-633.9	-668.1	-345.4	-345.4	-327.4	-261.6	-709.0	0.0
Mass Flow KG/HR								
TAR	0.0	0.0	0.0	0.0	586.3	0.0	0.0	0.0
H2	2569.1	3116.5	3292.4	4902.6	492.0	0.0	0.0	0.0
O2	0.0	0.0	0.0	0.0	0.0	0.0	157859.0	0.0
N2	57.7	57.7	57.7	57.7	0.0	0.0	583532.1	0.0
CO2	23818.8	35768.6	39609.6	39609.6	6808.4	0.0	26689.7	0.0
CO	10865.1	3259.5	814.9	814.9	13898.3	0.0	0.0	0.0
H2O	33903.3	29011.7	68.2	68.2	21659.9	18045.3	40980.5	0.0
CH4	1194.6	1194.6	1194.6	1194.6	2918.9	0.0	0.0	0.0
H2S	32.7	32.7	32.7	32.7	33.2	0.0	0.0	0.0
NH3	2.8	2.8	2.8	2.8	73.0	0.0	0.0	0.0
COS	0.8	0.8	0.8	0.8	0.0	0.0	0.0	0.0
SO2	0.0	0.0	0.0	0.0	0.0	0.0	5.6	0.0
SO3	0.0	0.0	0.0	0.0	0.0	0.0	0.0	0.0
NO2	0.0	0.0	0.0	0.0	0.0	0.0	0.0	0.0
NO	0.0	0.0	0.0	0.0	0.0	0.0	0.0	0.0
PHENOL	0.0	0.0	0.0	0.0	0.0	0.0	0.0	0.0
C6H6	0.0	0.0	0.0	0.0	0.0	0.0	0.0	0.0
C2H6	0.1	0.1	0.1	0.1	159.1	0.0	0.0	0.0
C2H4	0.0	0.0	0.0	0.0	1488.9	0.0	0.0	0.0
C2H2	0.0	0.0	0.0	0.0	107.9	0.0	0.0	0.0
O2SI	0.0	0.0	0.0	0.0	0.0	0.0	0.0	0.0
CARBON	0.0	0.0	0.0	0.0	0.0	0.0	0.0	0.4
WOOD	0.0	0.0	0.0	0.0	0.0	0.0	0.0	42470.4
ASH	0.0	0.0	0.0	0.0	0.0	0.0	0.0	0.4
CHAR	0.0	0.0	0.0	0.0	0.0	0.0	0.0	0.4

Appendix C: Cost sheets

Stream name	WOODGAS	WOODWAT
From block:	GASIFIER	WOODSEP
To block	CHARSEP	DRY1
Temperature C	825.3	15.0
Pressure N/SQM	1.38E+05	1.01E+05
Vapor Frac	1.0	0.0
Mole Flow KMOL/HR	2351.6	1838.9
Mass Flow KG/HR	48225.9	33127.5
Volume Flow CUM/HR	155777.0	43.6
Enthalpy MMBTU/HR	-324.7	-505.0
Mass Flow KG/HR		
TAR	586.3	0.0
H2	492.0	0.0
O2	0.0	0.0
N2	0.0	0.0
CO2	6808.4	0.0
CO	13898.3	0.0
H2O	21659.9	33127.5
CH4	2918.9	0.0
H2S	33.2	0.0
NH3	73.0	0.0
COS	0.0	0.0
SO2	0.0	0.0
SO3	0.0	0.0
NO2	0.0	0.0
NO	0.0	0.0
PHENOL	0.0	0.0
C6H6	0.0	0.0
C2H6	159.1	0.0
C2H4	1488.9	0.0
C2H2	107.9	0.0
O2SI	644565.4	0.0
CARBON	0.4	0.0
WOOD	0.0	0.0
ASH	0.0	0.0
CHAR	10815.0	0.0

REPORT DOCUMENTATION PAGE

Form Approved
OMB NO. 0704-0188

Public reporting burden for this collection of information is estimated to average 1 hour per response, including the time for reviewing instructions, searching existing data sources, gathering and maintaining the data needed, and completing and reviewing the collection of information. Send comments regarding this burden estimate or any other aspect of this collection of information, including suggestions for reducing this burden, to Washington Headquarters Services, Directorate for Information Operations and Reports, 1215 Jefferson Davis Highway, Suite 1204, Arlington, VA 22202-4302, and to the Office of Management and Budget, Paperwork Reduction Project (0704-0188), Washington, DC 20503.

1. AGENCY USE ONLY (Leave blank)	2. REPORT DATE	3. REPORT TYPE AND DATES COVERED
	August 1995	Technical Report

4. TITLE AND SUBTITLE
Technical and Economic Assessment of Producing Hydrogen by Reforming Syngas from the Battelle Indirectly Heated Biomass Gasifier.

5. FUNDING NUMBERS
(C)
(TA) HY51.4041

6. AUTHOR(S)
Margaret K. Mann

7. PERFORMING ORGANIZATION NAME(S) AND ADDRESS(ES)

8. PERFORMING ORGANIZATION REPORT NUMBER
DE95009275

9. SPONSORING/MONITORING AGENCY NAME(S) AND ADDRESS(ES)

National Renewable Energy Laboratory
1617 Cole Boulevard
Golden, CO 80401-3393

10. SPONSORING/MONITORING AGENCY REPORT NUMBER
NREL/TP-431-8143

11. SUPPLEMENTARY NOTES

12a. DISTRIBUTION/AVAILABILITY STATEMENT

National Technical Information Service
U.S. Department of Commerce
5285 Port Royal Road
Springfield, VA 22161

12b. DISTRIBUTION CODE
UC-1311

13. ABSTRACT *(Maximum 200 words)*
Author gives new information on the technical and economic factors surrounding hydrogen production at the Battelle Laboratories gasifier.

14. SUBJECT TERMS
biomass, gasifiers, hydrogen production

15. NUMBER OF PAGES
126

16. PRICE CODE

17. SECURITY CLASSIFICATION OF REPORT	18. SECURITY CLASSIFICATION OF THIS PAGE	19. SECURITY CLASSIFICATION OF ABSTRACT	20. LIMITATION OF ABSTRACT
Unclassified			

NSN 7540-01-280-5500

Standard Form 298 (Rev. 2-89)
Prescribed by ANSI Std. Z39-18
298-102