NREL/TP-257-4512 • UC Category: 261 • DE92001156

Photoelastic Stress Analysis on a Phoenix 7.9-Meter Blade

W.D. Musial
M.D. Jenks
R.M. Osgood
J.A. Johnson

Prepared for Windpower '91
Conference and Exposition,
Palm Springs, California,
September 24-27, 1991

National Renewable Energy Laboratory
1617 Cole Boulevard
Golden, Colorado 80401-3393
A division of Midwest Research Institute
operated for the U.S. Department of Energy
under contract No. DE-AC02-83CH10093

October 1991

On September 16, 1991, the Solar Energy Research Institute was designated a national laboratory, and its name was changed to the National Renewable Energy Laboratory.

NOTICE

This report was prepared as an account of work sponsored by an agency of the United States government. Neither the United States government nor any agency thereof, nor any of their employees, makes any warranty, express or implied, or assumes any legal liability or responsibility for the accuracy, completeness, or usefulness of any information, apparatus, product, or process disclosed, or represents that its use would not infringe privately owned rights. Reference herein to any specific commercial product, process, or service by trade name, trademark, manufacturer, or otherwise does not necessarily constitute or imply its endorsement, recommendation, or favoring by the United States government or any agency thereof. The views and opinions of authors expressed herein do not necessarily state or reflect those of the United States government or any agency thereof.

Printed in the United States of America
Available from:
National Technical Information Service
U.S. Department of Commerce
5285 Port Royal Road
Springfield, VA 22161

Price: Microfiche A01
Printed Copy A02

Codes are used for pricing all publications. The code is determined by the number of pages in the publication. Information pertaining to the pricing codes can be found in the current issue of the following publications which are generally available in most libraries: *Energy Research Abstracts (ERA)*; *Government Reports Announcements* and Index (*GRA* and I); *Scientific and Technical Abstract Reports (STAR)*; and publication NTIS-PR-360 available from NTIS at the above address.

PHOTOELASTIC STRESS ANALYSIS ON A PHOENIX 7.9-METER BLADE

By W.D. Musial
M.D. Jenks
R.M. Osgood
J.A. Johnson

National Renewable Energy Laboratory
(Formerly Solar Energy Research Institute)
Golden, Colorado

ABSTRACT

Photoelastic tests were conducted on the Phoenix 7.9-meter blade to develop the basic methodology for locating critical strain areas on full-scale composite structures. Under relatively low elastic loading the strain fields over various regions on the blade planform were documented with 35mm photographs under different loading conditions at the Solar Energy Research Institute (SERI) Structural Test Facility (STF). Strain concentrations were easily located and quantified. Principal strain magnitudes and directions were determined at the highest strain areas using separator gages. Results were compared to measured operating loads. This experiment demonstrated the value of experimental stress analysis using the photoelastic technique for the evaluation of composite blade designs.

INTRODUCTION

Photoelasticity is an accurate and versatile technique for making full-field strain measurements on a structural element [1]. Its primary advantage over other experimental techniques such as strain gages is that it allows quantitative measurement and visualization of the strain over a large area on a complex contoured surface, such as a wind turbine blade's planform. Complex or irregular geometry changes make these strain levels difficult to calculate. Accurate analytical predictions of blade strains usually require a detailed finite element model (FEM). Photoelasticity can be used to validate a FEM model or as a direct method for experimental stress verification. Photoelastic testing allows accurate measurement of stress concentrations and peak stresses anywhere on the coated area. It can be used for dynamic or static testing. It can be used to optimize the design stress distribution in a part to minimize weight.

Photoelasticity uses a specially processed transparent plastic coating bonded to the surface of the test structure with a reflective adhesive. While a load is applied to the structure, a polarized light source is directed at the coated surface. The light passes through the plastic coating and reflects off the adhesive. The reflected light is viewed through a polariscope. As the photoelastic coating is loaded, its index of refraction changes at a rate proportional to the strain of the test part. This induces a color change that is directly related to the amount of strain the coating is experiencing. Viewing this color change through a polariscope immediately reveals strain patterns that are otherwise invisible. With some experience, accurate quantitative measurements are possible.

On isotropic materials such as steel or aluminum, strain measurements are easily related to the stress state by Hooke's Law. On a composite material such as a wind turbine blade, the modulus and the material strength properties may vary widely depending on the measurement location and the relationship of the fiber orientation to the measurement axis. Since an accurate stress measurement requires intimate knowledge of the modulus at each measurement location, this discussion will be limited to a relative interpretation of strain fields only.

The test specimen, the Phoenix 7.9-meter blade, was developed by SERI and Phoenix Industries for the Micon 65 wind turbine. This blade uses an advanced design that employs the SERI thin airfoils designed for operation on wind turbine rotors. Details of the airfoil and blade development are described by Tangler [2].

Most of the emphasis of this report is placed on identifying areas that exhibited the highest strain levels relative to other areas on the same blade. It is left to the manufacturer, Phoenix Industries, to determine the influence that these areas will have on the integrity of their blade design. The reader is cautioned that the presence of a stress concentration does not necessarily indicate a design flaw or an eminent failure as stresses may still be well below the fatigue endurance limit. The authors do not attempt to draw any conclusions regarding the soundness of the Phoenix blade design.

PHOTOELASTIC FUNDAMENTALS

As the strain level at a point on a part increases the color pattern will display a spectrum of changes. As the stress is increased further, the color spectrum will repeat itself. The strain level where the color spectrum begins to repeat is called a fringe. At any point on the photoelastic coating, the strain field can be described by its fringe-order, N, or the number of fringes from the unloaded strain state. This quantity is measured directly on the test part. The accuracy of the measurements are as good as the operator of the polariscope. The sensitivity of the measurements, or the amount of strain represented by each fringe, is a constant property of the photoelastic material known as the fringe valve, f. The fringe value is defined as:

$$f=\frac{\lambda}{2tK} \tag{1}$$

where:

λ = 575 nm (22.7 x 10^{-6} in)
t = thickness of sheet
K = Optical Strain Coefficient

The difference in principal strains can be obtained by taking the product of the fringe value and the fringe-order, or:

$$\varepsilon_1-\varepsilon_2=fN \tag{2}$$

where:

ε_1, ε_2 = Maximum and minimum principal strain values

On most occasions when it is necessary to determine the principal strains it is at an interior location where the stress state is generally biaxial. At these locations the direction and magnitude of the principal strains are unknown. The direction of the principal strains can be easily determined using the polariscope alone at any location. However, to determine the magnitude of the individual principal strains another independent measurement using separator gages is necessary. A separator gage is essentially a two-element 90-degree strain gage rosette that is designed to be placed on top of a photoelastic coating [3]. The principal strain values are obtained by measuring the signal out from the separator gages and their accompanying instrumentation [4] using the following expressions:

$$\varepsilon_1 = (v + N*f)/2 \tag{3a}$$
$$\varepsilon_2 = (v - N*f)/2 \tag{3b}$$

where:

v = output signal of strain indicator

(Note, this value of v is precisely defined in Reference 3 and is specific to the configuration of the strain gage instrumentation used.)

A more complete discussion of the fundamentals of photoelastic theory is given in Reference 1.

INSTRUMENTATION AND EQUIPMENT

Test stand - All testing discussed in this report was conducted on the Elastic Test Stand at the Wind Energy Test Center (WETC) of SERI by SERI personnel. This stand was developed for nondestructive testing of small to medium-sized wind turbine blades up to 9.14 m (30 ft) long. The Phoenix 7.9-meter blade was vertically mounted in the stand using an adapter designed to fit the blade root. Loads were applied to the blade by pulling horizontally from points on the blade with a cable. The cable was passed through a pulley block attached to a structural girder that is part of the adjacent wall. The cable connects to a dial scale and come-along located near the floor. It is anchored in the concrete floor at the base of the girder. Loads can be applied anywhere along the blade up to a maximum limit of 8896 N (2000 lbs). A schematic of the test stand is shown in Figure 1.

Photoelastic coating - The process can be divided into three steps: 1) sheet casting, 2) sheet contouring, and 3) sheet bonding. On a complex contoured surface such as a wind turbine blade, the photoelastic material is cast from a two-part liquid resin and hardener mixture. The liquid mixture is poured onto a level casting plate where it partially cures into a solid sheet. In its semi-polymerized state (after approximately 2 hours) the sheet is removed from the casting plate and transferred to the surface where it will be bonded. It is carefully contoured by hand to conform to the surface and is left in place until it cures into a hard brittle state. After the edges of the sheet are trimmed and it is thoroughly cleaned, it is ready to be bonded. An experienced technician could cast, contour, and bond an average of five, 8-inch x 8-inch sheets per day. Reference 5 describes the casting and contouring process in more detail. Reference 6 gives more detail on the bonding procedure.

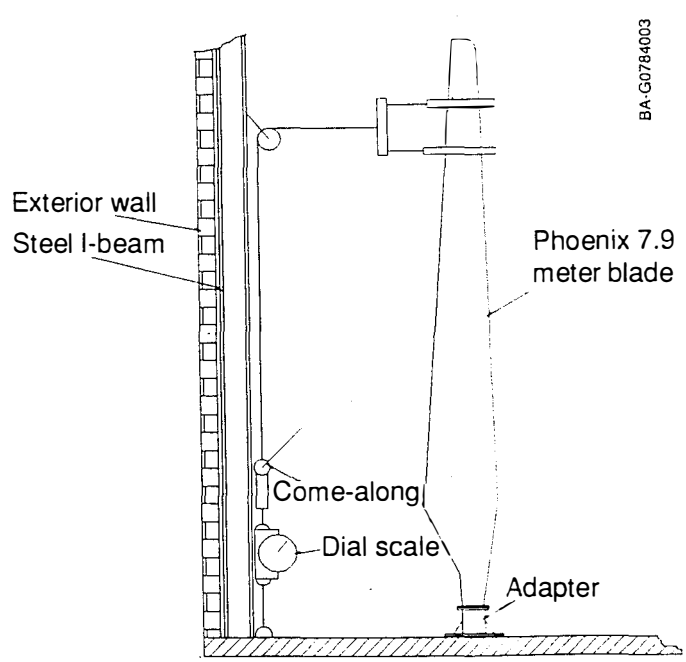

Figure 1. SERI NON-DESTRUCTIVE ELASTIC TEST STAND

The photoelastic resin used for this test was Measurements Group Type PL-1 with a strain optical coefficient of .100. Typical sheets were made in .216 m by .216 m (8.5 in by 8.5 in) squares and were trimmed to .203 m (8.0 in) squares for the final bonding. A volumetric calculation was made to determine the thickness of the individual sheets [7]. Sheets were cast to a nominal thickness of 2.88 mm (.1135 in), which gave a fringe value of 1000 micro-strains/fringe. This made the observed strain fields easier to interpret. Thickness measurements were made on each sheet prior to bonding. Some of the sheets measured thinner than predicted because of inaccuracies in the casting frame provided by the manufacturer.

Measuring Equipment - All of the photoelastic equipment was supplied by Measurements Group Inc.[4]. The instrument used to observe color changes in the photoelastic coating was a Model 031 Basic Reflection Polariscope. This gave a assessment of the full-field differences in principal strains over the coated surfaces. This instrument also provided a full-field map of the principal strain directions, or isoclinics, at any location. Using this instrument critical strain areas and areas with high stress gradients were quickly identified. A Model 232 Uniform Field Compensator was attached to the polariscope to provide more quantitative measurements of the principal strain differences areas where the strain levels are needed. This instrument measures the fringe-order, N, at specific locations. The fringe-order was multiplied by the fringe value of the photoelastic material to get the magnitude of the difference in principal strains at critical strain areas.

Final measurements were made to separate the magnitudes of the principal strains. This was done using PSG-01-06 separator gages connected to a Model 330 Interface Module and a P-3500 Digital Strain Indicator. Separator gages were bonded to the coating on the areas where quantitative fringe-order and principal strain direction measurements were taken. Gage outputs in microstrains were obtained by the strain indicator, which allowed the principal strain levels to be calculated by Equations 3a and 3b.

Strain fields were documented using a 35mm Nikon camera with an 80-200mm zoom lens at a nominal distance of 3.96 m (13 ft). Photographs were taken indoors with no exterior light. Interior lights were off so just the polariscope light source was illuminating the blade surface. Kodak 160 Tungsten slide film was used with 1/2 to 1/4-sec exposures.

TEST PROCEDURE AND LOAD CASES

To characterize the loading environment experienced by the wind turbine blade it was necessary to consider the instantaneous combined loading effects of flap loads, rotor torque loads, gravity loads, and transient loads caused by starting and stopping. The maximum root flap bending loads were determined from field tests that were conducted by Tangler [2]. Rotor torque loads were inferred from the power output. Gravity loads were determined directly from the blade weight and center of gravity. Braking loads were estimated from previous field experiments by McNiff [8]. These loads were vectorially added to determine the root bending moment and direction for different conditions.

No single load magnitude or direction can represent the actual loads experienced by the blade. The magnitude and direction of the combined loading vector varies substantially as the wind conditions change and the rotor turns. When examining the blade for stress concentrations it was important to consider all possible combined load conditions because many of the higher strain regions were found to be sensitive to pull-force direction. Areas of high strain for flap-wise pull directions virtually vanished during the edge-wise pull cases, and edge-sensitive strain concentrations were nearly undetectable for the flap-wise pulls. All of the key strain areas were at their highest or lowest magnitudes for the pure-edge or pure-flap pull directions. Stress concentrations that appeared in the photoelastic analysis for a particular load direction would generally appear as a stress riser under any load.

In order to include most conditions and prevent irregularities in the strain field from being overlooked, loads were systematically applied in different directions over a 180-degree range in 30-degree increments as shown in Figure 2. This loading pattern covered most possible operating conditions. For each load direction the loads were increased in steps until a maximum load was reached. The maximum loads were representative of typical high operating bending moments at the root of the blade as described previously. Photographs were taken of each critical area at each load level, and then the blade was rotated to the next position.

The blade was loaded by applying a bending moment from a single point to the outer portion of the blade. There were two application points used as shown in Figure 3. Regions A through F in Figure 3 were loaded from pull point 1 using a double saddle arrangement (shown in Figure 1) with the load centered at a point 6.1 m (20 ft) from

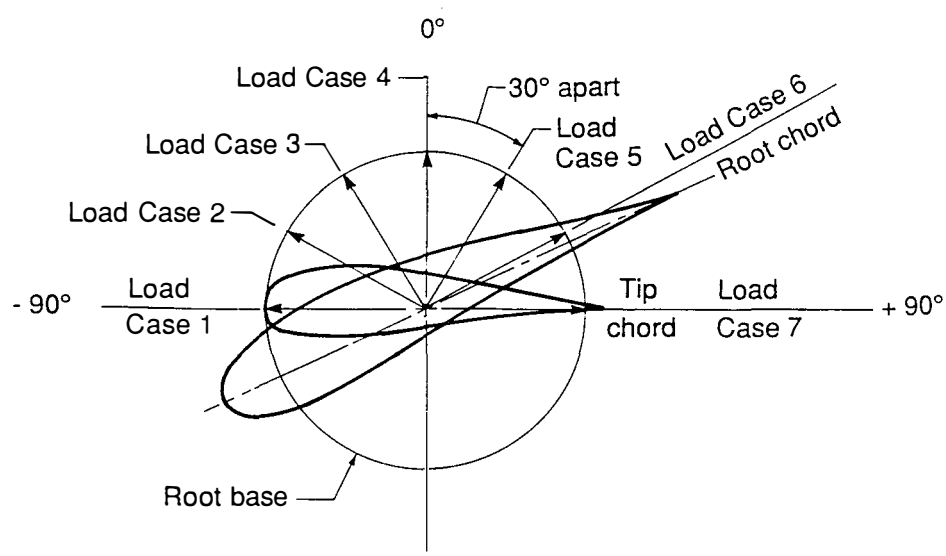

Figure 2. BLADE PULL SIGN CONVENTION AND PULL FORCE DIRECTIONS

the root flange. The double saddle was used to spread the load over two span-wise stations, .61 m (2 ft) apart. Maximum forces that were applied at this location were 5338 N (1200 lbs), which corresponded to a root bending moment of 29,827 N-m (22,000 ft-lbs). The tip regions were loaded from pull point 2 located .85 m (2.79 ft) out-board from the tip split line. The maximum load levels used at this point were 1779 N (400 lbs), which corresponded to a 1,513 N-m (1,116 ft-lb) bending moment at the split line.

TEST RESULTS

The test approach was separated into two parts. The first and most time-consuming was a complete survey of all of the coated areas for strain concentrations, high-strain gradients, or areas of high strain relative to the surrounding areas for each load case. The survey also looked for areas where little or no strain was present under normal loads. The second part was to revisit some of the most highly strained areas or areas where the strain field looked interesting and make quantitative measurements of the principal strain levels. This phase was done in a precursory manner to evaluate the photoelastic separator gages and to determine their usefulness.

Strain Field Survey - Figure 3 shows the location of the photoelastic coating on the Phoenix 7.9-meter blade. Areas were selected based on interviews with Phoenix Industries, static tests conducted at the University of North Dakota, and from field failure information on its Danish blade predecessor. Some areas that were selected were not coated because of time constraints. Each of the coated areas, shown in Figure 3, are described in Table 1.

TABLE 1 - PHOTOELASTIC COATED REGIONS

REGION	DESCRIPTION
A	Blade Root - Up-wind side
B	Blade Root - Trailing Edge
C	Trailing Edge from Root to Break Point
D	Span-wise and Chord-wise Strip on Up-wind side
E	Leading Edge Bond Near Break Point
F	Chord-wise Strip 3.35 Meters from Root
G	Pitch Mechanism Location
H	Pitch Shaft Supports and Split Line Transition
I	Tip - Pitch Shaft Supports

The root area was of general interest because of the large number of failures associated with the original Hutter root design. Unfortunately, the root fillet area where the blade flange connects to the blade could not be coated properly due to the extreme differences in the properties of the material in that area. Therefore, the common Hutter root failure mode is not addressed in this report.

Region A and B covered the circular section of the blade root over the up-wind and trailing edge sides. Under all load cases, the strain levels in these areas were very low. No further quantitative measurements were made, but the strain levels barely exceeded the minimum amount required to change the color tint under the highest load applied. This indicates that the circular section of the blade root is extremely robust.

Region C covers the area extending up the trailing edge from the root barrel approximately .406 m (1.33 ft) beyond the first true airfoil shape. Strain levels in this area were most sensitive to loads applied in the edge-wise direction. This region was a concern simply because it encompasses the most complex geometry changes on the blade. The trailing edge in this region transitions from sharp to rounded. The high pressure surface passes from a concave to a convex shape, and the overall cross section

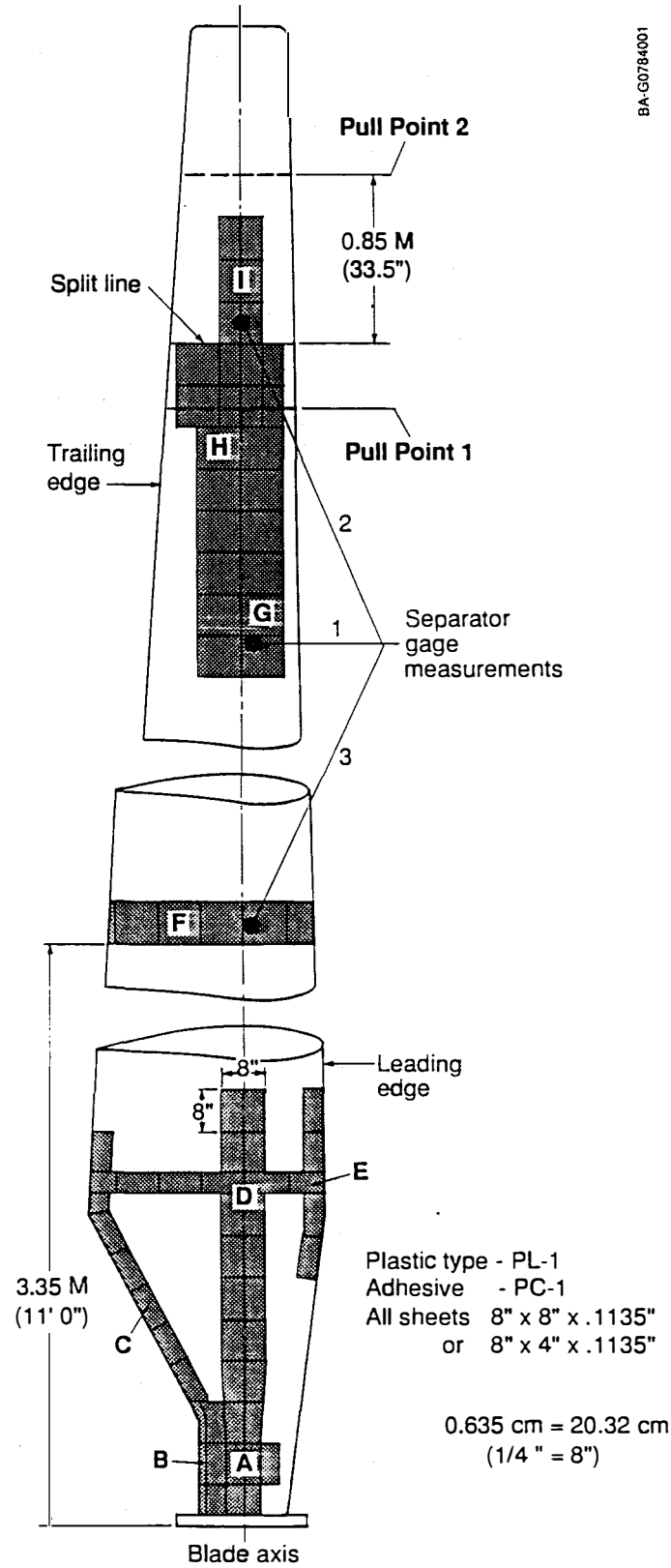

Figure 3. PHOTO-ELASTIC SHEET CONTOURING SCHEDULE FOR PHOENIX 7.9 METER BLADE (HIGH PRESSURE SIDE)

tapers from an airfoil to a circle. The internal structural joint bonding the high and the low pressure halves of the blade also transitions in this region. Where the trailing edge is sharp there is a direct adhesive bond between the two skin halves. The more rounded area inboard, is joined by internal and external bridging laminates.

One spot near this transition exhibited higher strain levels than the surrounding area. Figure 4 shows a photo of this area. High strain gradients in the span-wise direction were observed where the strain levels increased over one fringe-order above the surrounding area. This area is the focal point of the major geometry changes as well as the area where the two internal joining systems overlap.

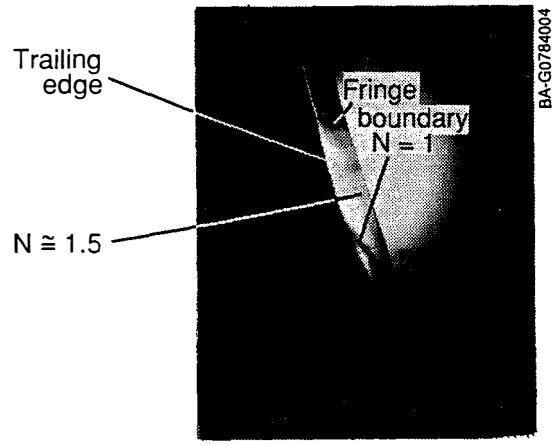

Figure 4. REGION C - EDGE PULL AT 1200 POUNDS FROM PULL POINT #1 (19,200 ft/lbs)

Region D connects to Region A at the root. It includes the crossing of the span-wise strip from Region A and the chord-wise strip at the location of the first in-board airfoil. The span-wise strip was placed along the up-wind surface over the internal shear web extending approximately 2.13 m (7 ft) from the root. This region was coated to observe the effect of ply drop-offs and to observe the strain distribution about the shear webs. The chord-wise strip was applied just past the first airfoil location. This area was selected to observe chord-wise changes in the strain distribution at a critical geometry change. The strain levels in this region were moderate and evenly distributed with the highest strains located over the shear web as expected. There were no high strain gradients or strain concentrations in this region even where the laminate drop-offs occurred. Strain levels in this region were sensitive to mostly flap loading.

Region E was a strip that covered the leading edge seam in the area which begins the transition from airfoil to root geometry. The interest in this area was in observing the strain levels at the leading edge bond. This area was insensitive to flap loading and only mildly sensitive to edge-wise loading. During the testing there was an unusual shift in the strain levels observed during load case 3. The strain levels increased by over a fringe during the loading. Most of this strain remained after the load was removed, and appeared as a very small but permanent deformation of the blade shape that was only visible in the photoelastic coating.

Region F was a chord-wise strip located 3.35 m (11 ft) from the root flange. This was the percent radial location where other blades of differing size and construction failed during static load tests. The primary reason for examining this area was to verify that the new structure was adequately designed in this area. During this test the strain patterns observed did not exhibit any unusually high levels that would indicate this to be a failure site. However, under more severe loading there may be some nonlinear effects that may accelerate the occurrence of high strain levels in this area.

Regions G through I were loaded from the second pull point. These areas were all coated to observe strain patterns associated with the tip mechanism and the related blade structure. Region G was coated to observe strain levels in the skin where the pitch mechanism was bonded to the blade. Tip loads due to normal operation and due to tip deployments are carried from the tip through a carbon shaft and into an aluminum casting where the pitch mechanism resides. This casting is bonded to the blade skin approximately 1.07 m (3.5 ft) in-board from the split line. The shaft is supported out-board from the pitch mechanism by a set of bushings. Loads transmitted into the pitch mechanism are dissipated into the blade skin.

The entire tip area was sensitive to flap loading as expected and relatively insensitive to edge loading. Under a flap load, strain levels in region G were highest in a .152 m by .203 m (6 in by 8 in) rectangular area in-board of the area where the pitch mechanism casting box was bonded to the skin as shown in Figure 5. The highest strain levels were observed at the in-board corners of this rectangular area. The internal structure in this area was modified to provide room for and access to the pitch mechanism. The primary structural materials have been routed around the mechanical unit on both the leading and trailing edge sides. This laminate material path change begins several feet in-board of the mechanism to help provide a smoother transition. In contrast, Figure 5 also shows that almost no strain was carried by the skin under the mechanism due to the higher stiffness provided by the mechanism.

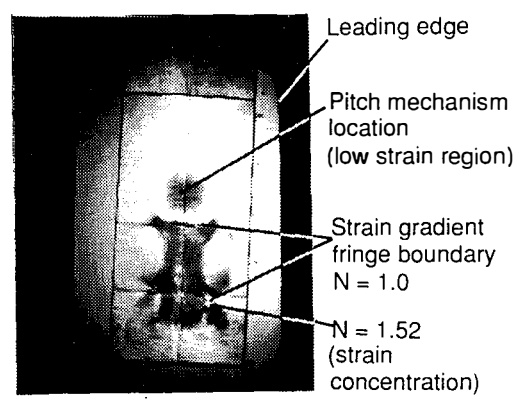

Figure 5. REGION G - FLAP PULL FROM 0°. 400 POUNDS AT PULL POINT #2 (2,500 ft/lbs)

Region H is the area just in-board of the split line where the pitch shaft passes through the blade. Bushings imbedded in the structure support the shaft. There was surprisingly very little strain in this area. Under a pure flap load this area exhibited only a small amount of strain, which was uniformly distributed over a large area. This area is shown in Figure 6.

Region I, shown in Figure 6, was located on the tip section directly across the split line. The strain levels on the tip section were high in contrast to the low strains on the in-board side. A prominent area of higher strain was observed in the skin covering the pitch shaft. The highest strains were observed at the last support before the shaft exits the tip and crosses the split line. This point is approximately 3 inches out-board from the split line.

Principal Strain Measurements - Principal strains were determined at three of the locations described below where high fringe-order measurements were made. Location 3 was chosen as a reference where the strain field was relatively uniform. Table 2 lists each of the locations and the corresponding fringe-order measurements. Figure 3 shows the exact locations of each of these measurements.

Quantitative measurements of the difference in principal strains are possible at any location from a simple measurement obtained using the polariscope and compensator. However, to determine the exact magnitude of the individual principal strain components the separator gage measurement is required. To make any quantified measurement it is necessary to consider corrections for thickness variation of the photoelastic coating, reinforcement of the part by the coating, and local reinforcements caused by the gage itself.

The fringe value of the coating may vary locally with the thickness of the photoelastic sheets. As mentioned previously, sheet thicknesses did vary but were measured at several locations on each sheet. These measurements were applied to the final calculation of the fringe value, f.

Reinforcement of the test part could be a valid concern if the test part is thin relative to the photoelastic coating. The modulus of elasticity for the photoelastic material was 2,758,000 kPa (400,000 psi) or approximately one order-of-magnitude lower than typical unidirectional E-Glass/Polyester laminates. If thicknesses were similar at the measurement location this would lead to approximately a 10% error causing the measurements to read lower than actual. This effect was ignored for this experiment.

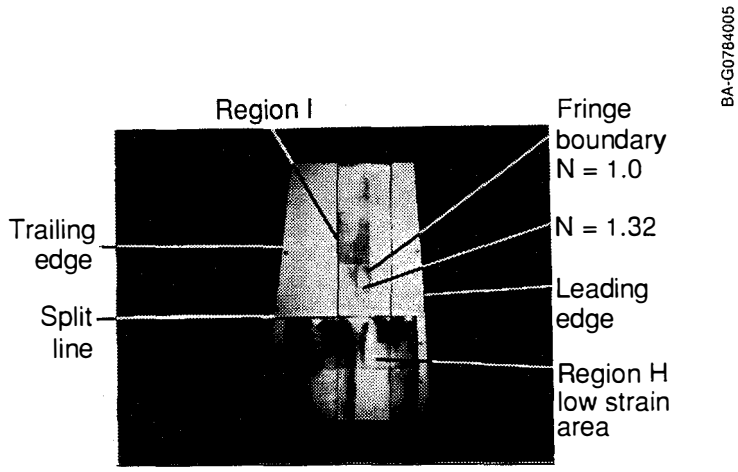

Figure 6. REGION I AND H - 30° FLAP PULL. 400 POUNDS FROM PULL POINT #2

TABLE 2. - LOCATION OF SEPARATOR GAGE MEASUREMENTS

LOCATION NUMBER	REGION ID	DESCRIPTION	FRINGE ORDER
1	G	In-board from pitch mechanism	1.52
2	I	Shaft support on tip	1.32
3	F	Uniform area over web	0.72

Local reinforcements caused by the gage itself are taken into consideration during the separator gage manufacturing, and there is no need to correct for them after the fact. A complete description of the necessary photoelastic corrections is given in Reference 9.

TABLE 3 - RESULTS OF SEPARATOR GAGE MEASUREMENTS

MEASUREMENT LOCATION	FRINGE ORDER	FRINGE VALUE	DISPLAYED SIGNAL	PRINCIPAL STRAIN (MAX) ε_1	PRINCIPAL STRAIN (MIN) ε_2	PRINCIPAL AXIS
		(micro-strains/fringe)	(micro-strains)	(micro-strains)	(micro-strains)	(degrees)
1	1.52	1076	430	1033	-603	4
2	1.32	1096	620	1033	-413	0
3	0.72	1090	480	632	-152	0

In Table 3 the principal strains at each location are listed. Direct comparisons between the different locations cannot be made because the bending moments and the design load carrying capability at each location vary dramatically. However, for a given location the strain state has been determined. At location 1, the principal strain axis is aligned 4 degrees from the longitudinal axis of the blade. The measured principal strains show that the maximum strain is tensile at 1033 micro-strains with a relatively large compressive strain level of -603 micro-strains corresponding to the minimum strain at 94-degrees to the blade axis. This large component of compressive lateral strain implies a biaxial stress state exists at this location since Poisson's Ratio would be near .28 for uniaxial loading.

For location 2, the principal axis is aligned with the longitudinal blade axis. The maximum strain was measured at 1033 microstrains also, but the minimum strain was at -413 microstrains. At location 3, where the strain field appeared uniform during the photoelastic measurements, the principal strain was also aligned with the blade axis and the maximum and minimum strains were 632 and -152 respectively. These measurements suggest that this area could be experiencing more uni-axial loading because the ratio between the longitudinal and the lateral strain levels is .24, which is close to the expected Poisson's Ratio.

CONCLUSIONS

Photoelasticity can be used on wind turbine blades to determine areas of high strain under applied bending loads. Quantitative measurements of the difference in principal strains and the principal strain direction can be easily obtained using a basic reflecting polariscope and compensator. Separator gages placed on top of the critical strain areas can be used to determine the magnitude of the principal strains if required.

Results from photoelastic test can be used to verify design integrity, optimize strength-to-weight ratios, and eliminate design weaknesses in wind turbine blade design. Results may also be used to help validate or enhance FEM predictions.

Composite materials exhibit anisotropic properties that make it more difficult to interpret the observed strain fields in terms of stress.

A substantial amount of time can be saved in the photoelastic application process if prior knowledge of critical areas or intelligent guess work is applied.

ACKNOWLEDGMENTS

The authors would like to thank the many people who cooperated and assisted with this project. In particular the efforts of Jim Frerotte, Dick Widseth and the others at Phoenix Industries are greatly appreciated, and without their support this project would not have been possible. Others who offered support and guidance along the way were Scott Klingenstein, Jim Tangler, Brian Smith, Sandy Butterfield, and Bob Keller. Finally, the United States Department of Energy is recognized for its continued support.

REFERENCES

1. Technical Note TN-702-1 "Introduction to Stress Analysis by the PhotoStress Method", Measurements Group Inc., Raleigh, N.C.

2. Tangler J., B. Smith, and Jager D., "SERI Advanced Wind Turbine Blades," ISES Solar World Congress Proceedings, August 1991, Denver, CO.

3. Technical Note TN-708, "Principal Stress Separation in PhotoStress Measurements," Measurements Group Inc., Raleigh, North Carolina.

4. Product and Technology Binder, Photoelastic Division Measurements Group Inc., Raleigh, North Carolina.

5. Instruction Bulletin IB-221-B, "Instructions for Casting and Contouring Photoelastic Sheets," Measurements Group Inc., Raleigh, North Carolina.

6. Instruction Bulletin IB-228, "Instructions for Using PC-1 Adhesive," Measurements Group Inc., Raleigh, North Carolina.

7. Instruction Bulletin IB-233, "Instructions for Mixing Type PL-1 Liquid Plastic", Measurements Group Inc., Raleigh, North Carolina.

8. McNiff B. ,W.D. Musial, R. Errichello, Variations in Gear Fatigue Life for Different Wind Turbine Braking Strategies, SERI/TP-257-3984, June 1991.

9. Technical Note TN-706, "Corrections to Photoelastic Coating Fringe-Order Measurements," Measurements Group Inc., Raleigh, North Carolina.