SERI/TP-252-2105
UC Category: 62e
DE84000019

High-Temperature Direct Absorption Research

Robert J. Copeland

October 1983

Presented at the
Solar Thermal Workshop
Atlanta, GA
7-8 September 1983

Prepared under Task No. 1387.25
WPA No. 417

Solar Energy Research Institute
A Division of Midwest Research Institute

1617 Cole Boulevard
Golden, Colorado 80401

Prepared for the
U.S. Department of Energy
Contract No. DE-AC02-83CH10093

Printed in the United States of America
Available from:
National Technical Information Service
U.S. Department of Commerce
5285 Port Royal Road
Springfield, VA 22161
Price:
Microfiche A01
Printed Copy A02

NOTICE

This report was prepared as an account of work sponsored by the United States Government. Neither the United States nor the United States Department of Energy, nor any of their employees, nor any of their contractors, subcontractors, or their employees, makes any warranty, express or implied, or assumes any legal liability or responsibility for the accuracy, completeness or usefulness of any information, apparatus, product or process disclosed, or represents that its use would not infringe privately owned rights.

HIGH-TEMPERATURE DIRECT ABSORPTION RESEARCH

Robert J. Copeland
Solar Energy Research Institute
Golden, Colorado

ABSTRACT

The Solar Energy Research Institute (SERI) is conducting research for high-temperature solar thermal receivers. A molten salt can serve as both the receiver heat transport and the thermal storage medium. Molten carbonates are the primary candidate salts for applications requiring temperatures of 850°C (1562°F) or higher. The receiver absorbs concentrated solar radiation directly on a salt film flowing down a wall in a cavity. This research has shown that depending on the receiver design, laminar, transition, or turbulent flow may be present. The heat transfer characteristics depend on both the optical properties and the film thickness. Predictions of molten-salt film thickness indicate a substantial variation in film thickness between flow regimes. A device has been constructed that can be used to verify the predictions and to provide data at low temperatures where none currently exist. Mathematical models of the heat transfer process in clear and blackened salts have been developed for both laminar and turbulent flow regimes. Blackened salts are preferred, but clear salts can also be employed.

INTRODUCTION

SERI researchers are investigating a direct absorption receiver and thermal storage (DARTS) concept for high-temperature solar thermal applications, particularly the heat transfer aspects of the absorption of the solar radiation. The objective is to generate data from which commercial scale central receiver systems can be designed. The research currently emphasizes modeling of the direct absorption process and measurements of liquid film thickness.

Temperatures on the order of 850°C (1562°F) and higher are needed for (1) fuels and chemicals (e.g., methane reforming), (2) electric power production (i.e., with gas cycles),

and (3) industrial process heat. Our approach is to employ molten salt as both the receiver and thermal storage media; the storage aspects are being researched under thermal storage program funding [1].

The molten salts being investigated are carbonates, chlorides, and hydroxides. Although sodium hydroxide is the cheapest media, it has the highest corrosion rate on containment materials; thus it will not be studied further at this time. Chlorides have low corrosion rates on ceramics but high rates on metals. Carbonates have low or modest corrosion rates on both metals and ceramics; the ternary eutectic of lithium, sodium, and potassium carbonate has been selected as the primary salt mixture for DARTS. Alternative salts are also being considered as backup to the ternary carbonate but at a reduced level of research.

Figure 1 illustrates the receiver concept. Low-temperature salt at 450°C is pumped to the receiver in the riser. A manifold distributes that salt over the top of the absorber surface. The molten salt runs down the absorber surface and is heated by the concentrated solar flux to a temperature of 850°C or higher. The salt is returned to ground level through the downcomer. The solar radiation enters the cavity through an uncovered opening. Secondary concentrators may be employed outside the cavity to improve receiver efficiency. Either the salt is blackened or black absorber surface is used with a relatively clear salt.

DIRECT ABSORPTION PROCESS

Figure 2 illustrates a section of the absorber surface with molten salt flowing over it. The surface is nearly vertical at angle χ. The solar radiation at a flux $F^{o}_{b\lambda}$ strikes the free surface of the salt at angle $\bar{\theta}$ and is bent to angle θ in the salt. The flux is partially absorbed in the salt film of thickness δ. The remaining flux is absorbed on the black absorber surface. The molten salt enters with constant temperature T_o and with nearly uniform velocity U_o. As the salt flows down the x-dimension, a velocity profile U(y) develops across the salt film. The free surface of the salt interacts by both radiation and convection with other surfaces and the air inside the cavity. That heat exchange is illustrated by a convective cooling coefficient h and an ambient temperature T_{amb} characteristic of the cavity. The principal factors affecting the heat transfer are

(1) flux level, (2) flow regime (laminar or turbulent), (3) salt optical properties, (4) absorber surface condition, and (5) salt film thickness. The convective heat transfer rate to the air has been calculated and is at least an order of magnitude smaller than any of the other factors.

We have chosen a 50-MW_t receiver based on the Boeing design [2] to be our baseline size. This size was selected because a number of other receiver designs are available to allow comparison, and data generated can be converted to larger and smaller sizes.

FLOW REGIMES

Figure 3 illustrates the shape of the absorber surface for the baseline design with an average receiver flux of 500,000 W/m^2. All three configurations are curved in the z-direction to maintain constant flux in that direction; the figure illustrates the surfaces as if they were flat. For the nominal case (100 m^2) active absorber surface, the flow is turbulent in the presence of maximum solar insolation and laminar for minimum solar insolation, which occurs as a result of viscosity changes with salt temperature. An all-laminar configuration can also be defined, but as illustrated it has an odd shape and may have flow distribution problems. An all turbulent configuration also has an odd shape and requires pumping of the salt back to the top of the absorber surface, once after being heated to 617°C and a second time after being heated to 783°C. Because of its more desirable geometry, the nominal case (turbulent and laminar flow) was selected for detailed analysis.

Figure 4 presents the calculated thickness of the salt film. At minimum solar insolation (a turndown ratio of 10:1 is assumed), the salt film is thin. These data assume laminar flow down the entire length, but the flow could become turbulent near the exit. At maximum solar flux, the flow is turbulent over the entire absorber surface. The film thickness is relatively constant at about 2 mm. Thus the film thickness near the exit could be as small as 0.25 mm or over 2.0 mm. Since the surface condition of the absorber seems to affect the transition from laminar to turbulent flow, we constructed a device to investigate those effects.

Figure 5 illustrates the apparatus constructed to measure flow thickness. A micrometer measures the thickness of the water, which is the medium. We have just initiated these

experiments, and the results to date indicate that under some flow conditions dry spots can develop, which could cause local overheating and damage to the absorber surface. Rough, melting surfaces distribute the flow well, avoiding dry spots. Additional tests are in progress to measure film thickness and velocity with that apparatus.

MATHEMATICAL MODELING

The direct absorption process shown in Figure 2 has been modeled for both laminar and turbulent flow regimes [4]. A computer program developed at SERI has been checked against previous models generated by Sandia for molten nitrate salt [3]. Good agreement was obtained with the earlier work, which was limited to conditions where the salt is isothermal in the y-direction. The SERI model is capable of predicting both x-direction and y-direction temperatures in the salt film. The model contains a number of simplifying assumptions, and additional work is in progress to incorporate more of the major variables.

The current model has been employed to calculate temperatures in the salt film for solar fluxes in the range of 100,000 to 1,000,000 W/m^2. The data are being generated parametrically because a receiver can be designed for small or large solar fluxes by making the absorber surface large or small; similarly the flow regime can be designed to be laminar or turbulent by the shape of the absorber surface (see Figure 3).

Figure 6 illustrates the typical data and conditions for laminar flow. Relatively small temperature differences are observed (e.g., 25°C maximum between the temperature of the wall and the salt). Note that these data are for a flux of 90,910 W/m^2. For laminar flow and a flux of 1,000,000 W/m^2, the wall is about 300°C hotter than the salt. Since receiver efficiencies and salt corrosion of the wall are adversely affected by the high wall temperatures, high fluxes and laminar flow conditions should be avoided in the design of the receiver. For turbulent flow conditions, the salt transfers heat by conduction and turbulent mixing. The heat transfer rates are much larger than in laminar conditions, and relatively small temperature differences between the wall and the salts can be obtained with either clear or black salts at high fluxes (i.e., 1,000,000 W/m^2).

We also used the model to investigate the temperature distribution in the x-direction (the vertical dimension from inlet to exit). The maximum temperature differences between

the wall and the salts occur at the exit. The model also shows that very small temperature differences occur in the inlet region, regardless of flux and flow conditions. Based on the current data, a flow length of 1 m or longer is needed to measure a significant temperature gradient.

FUTURE WORK

SERI plans to continue the current activities in film thickness measurements and improving the mathematical model. A direct absorption heat transfer experiment is planned to validate the mathematical model. Our initial work is directed to the application of maximum salt temperatures between 850° and 950° C. Long-range plans include research on application of temperatures up to 1100° C.

REFERENCES

1. Copeland, R. J., and R. Thomas Coyle, "Advanced High Temperature Molten-Salt Storage Research," Proceedings of the DOE Physical and Chemical Energy Storage Annual Contractors' Review Meeting, CONF-83 0974, 12-14 Sept., 1983, p.p. 54-58.

2. Boeing Engineering and Construction Company, Small Central Receiver Braxton Cycle Study, Livermore, CA: Sandia National Laboratories, draft, June 1983.

3. Abrams, M., The Temperature Distribution Along an Absorbing-Emitting Fluid Layer Flowing Over an Opaque Surface, SAND 76-8622, Livermore, CA: Sandia National Laboratories, August 1976.

4. Lazaridis, Anastas, Robert J. Copeland, and Jay Althof, "A Solar Irradiated Liquid Film Flowing Over a Solid Wall." Draft paper submitted to the ASME Solar Energy Division 6th Annual Technical Conference to be held in Las Vegas, NV, April 1984.

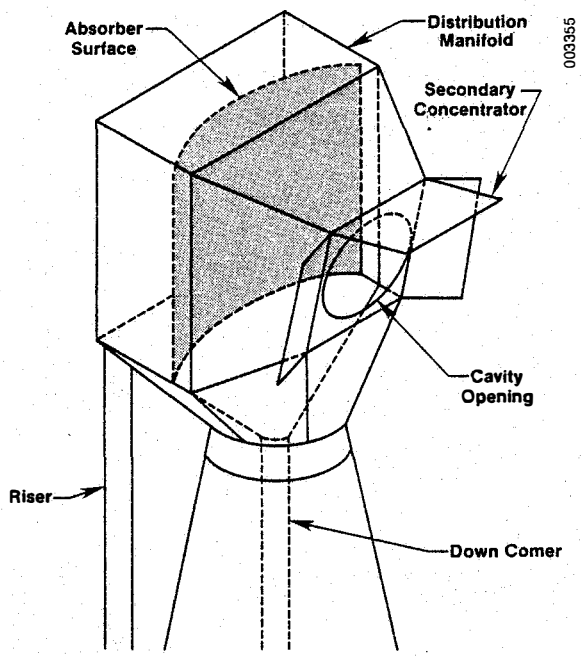

Figure 1. 50-MW_t DARTS Receiver

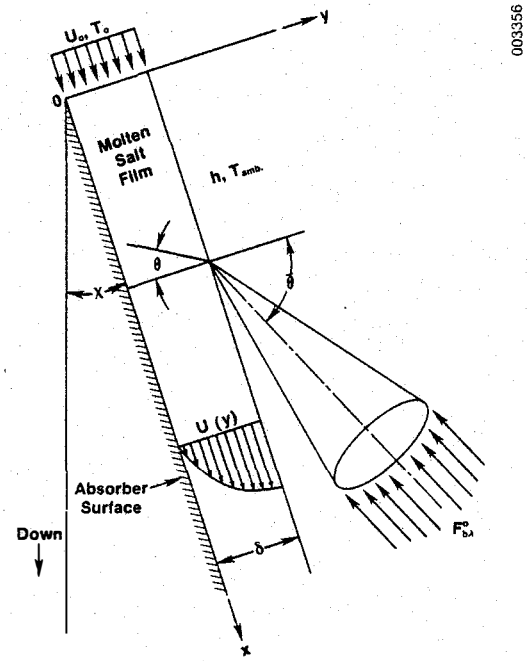

Figure 2. Direct Absorption Process

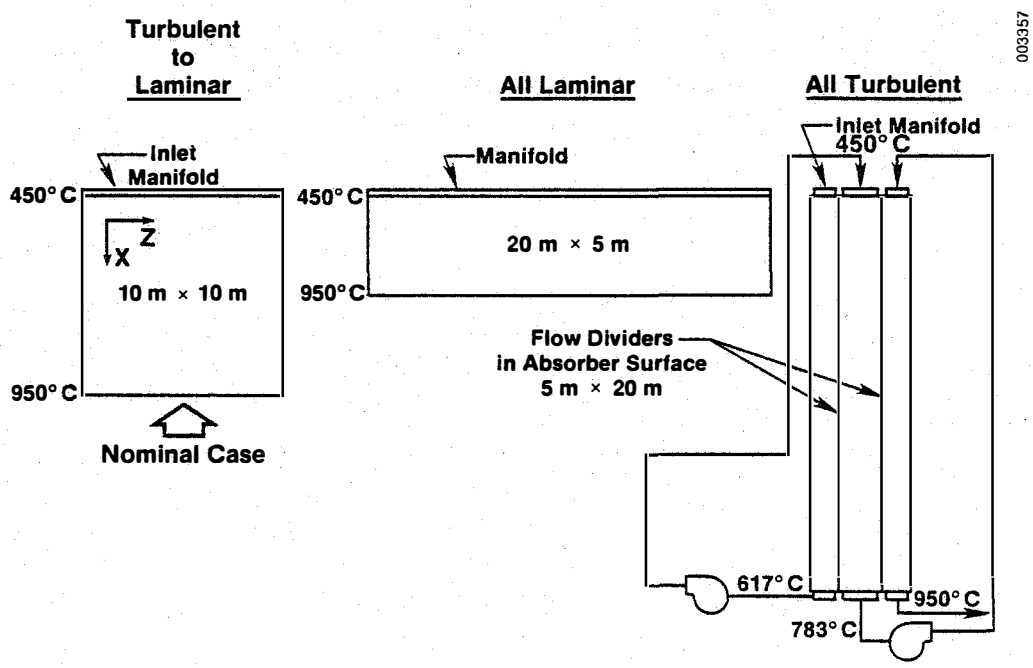

Figure 3. Flow Geometry, 50-MW_t, 100-m^2 Absorber

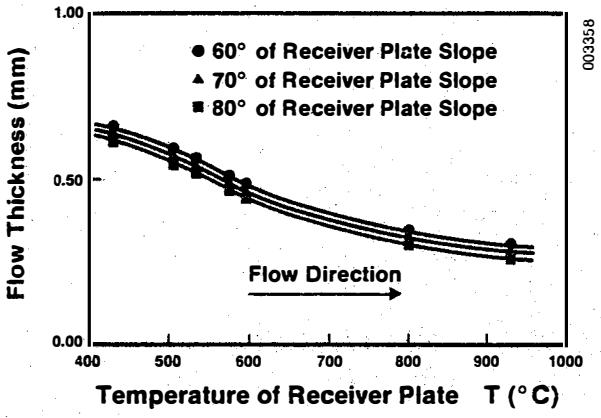

Figure 4. Fluid Thickness Flowing on Receiver Plate at 1/10 of Maximum Insolation

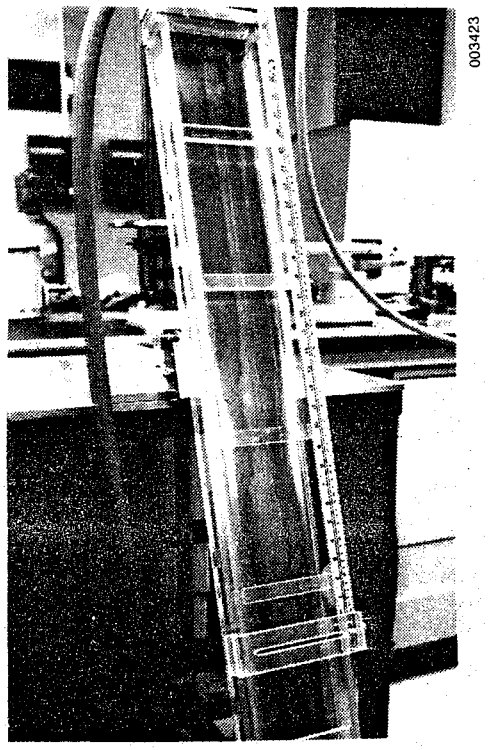

Figure 5. Apparatus for Measuring Flow Thickness

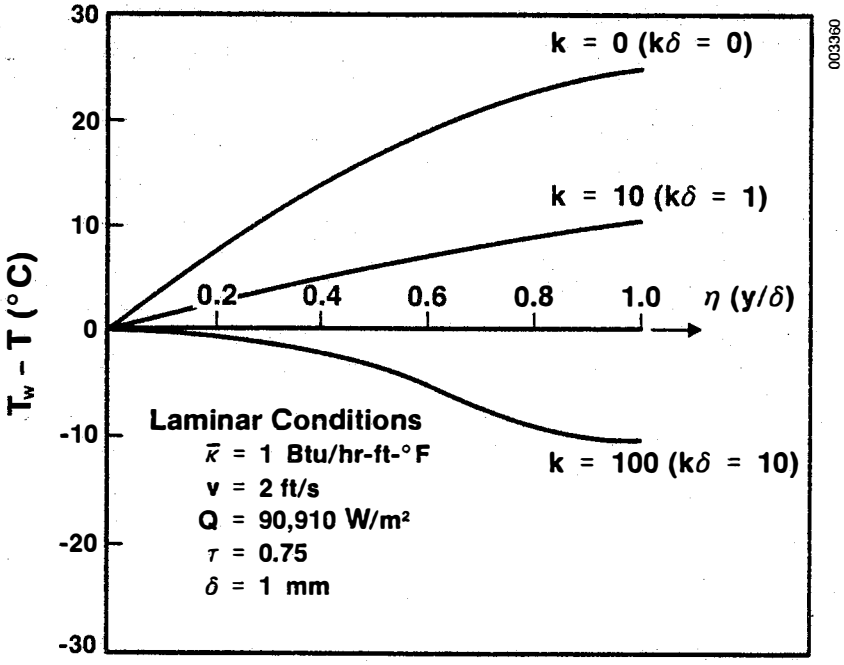

Figure 6. Effect of Optical Thickness on Temperature Profile in Liquid Film with Black Wall Substrate - Laminar Conditions